Form No. 3424-781 Rev B

12in Cordless Single-Line Trimmer

Model No. 51484—Serial No. 319000001 and Up

Model No. 51484T—Serial No. 319000001 and Up

Operator's Manual

Model 51484T does not include a battery pack or a charger.

If you have questions or problems, contact us at www.Toro.com or call toll free 1-800-237-2654 (US) or 1-800-248-3258 (Canada) before returning this product.

You may contact Toro directly at www.Toro.com for product and accessory information, help finding a dealer, the complete warranty details, or to register your product.

⚠ WARNING

CALIFORNIA
Proposition 65 Warning

The power cord on this product contains lead, a chemical known to the State of California to cause birth defects or other reproductive harm. Wash hands after handling.

Use of this product may cause exposure to chemicals known to the State of California to cause cancer, birth defects, or other reproductive harm.

General Safety Rules

WARNING: When using electric gardening appliances, basic safety precautions should always be followed to reduce the risk of fire, electric shock, and personal injury, including the following:

Read all instructions.

The term "power tool" in all of the warnings refers to your mains-operated (corded) power tool or battery-operated (cordless) power tool.

1. **Work area safety**
   - A. **Keep work area clean and well lit.** *Cluttered or dark areas invite accidents.*
   - B. **Do not operate power tools in explosive atmospheres, such as in the presence of flammable liquids, gases or dust.** *Power tools create sparks which may ignite the dust or fumes.*
   - C. **Keep children and bystanders away while operating a power tool.** *Distractions can cause you to lose control.*
2. **Electrical safety**
   - A. **Power tool plugs must match the outlet. Never modify the plug in any way. Do not use any adapter plugs with earthed (grounded) power tools**. *Unmodified plugs and matching outlets will reduce risk of electric shock.*
   - B. **Avoid body contact with earthed or grounded surfaces.** *There is an increased risk of electric shock if your body is earthed or grounded.*
   - C. **Do not abuse the cord. Never use the cord for carrying, pulling or unplugging the power tool. Keep cord away from heat, oil, sharp edges or moving parts.** *Damaged or entangled cords increase the risk of electric shock.*
   - D. **Do not expose power tools to rain or wet conditions.** *Water entering a power tool will increase the risk of electric shock.*
   - E. **If operating a power tool in a damp location is unavoidable, use a supply protected by a residual current device (RCD) in AUS or a ground fault interrupt (GFI) in the USA.**

     Use of an RCD or GFI reduces the risk of electric shock.
3. **Personal safety**
   - A. **Stay alert; watch what you are doing and use common sense when operating a power tool. Do not use a power tool while you are tired or under the influence of drugs, alcohol or medication.** *A moment of inattention while operating power tools may result in serious personal injury.*
   - B. **Use personal protective equipment. Always wear eye protection.** *Protective equipment such as dust mask, non-skid safety shoes, hard hat, or hearing protection used for appropriate conditions will reduce personal injuries.*
   - C. **Prevent unintentional starting. Ensure the switch is in the off-position before connecting to power source and/or battery pack, picking up or carrying the tool.** *Carrying power tools with your finger on the switch or energizing power tools that have the switch on invites accidents.*
   - D. **Do not overreach. Keep proper footing and balance at all times.** *This enables better control of the power tool in unexpected situations.*
   - E. **Dress properly. Do not wear loose clothing or jewelry. Keep your hair, clothing and gloves away**

© 2020—The Toro® Company
8111 Lyndale Avenue South
Bloomington, MN 55420

Register at www.Toro.com.

Original Instructions (EN)
Printed in China
All Rights Reserved

3424-781

from moving parts. *Loose clothes, jewelry, or long hair can be caught in moving parts.*

F. **Keep hands and feet away from the cutting area.**

4. **Power tool use and care**

A. **Do not force the power tool. Use the correct power tool for your application.** *The correct power tool will do the job better and safer at the rate for which it was designed.*

B. **Do not use the power tool if the switch does not turn it on and off.** *Any power tool that cannot be controlled with the switch is dangerous and must be repaired.*

C. **Remove the battery pack from the power tool before making any adjustments, changing accessories, or storing power tools.** *Such preventive safety measures reduce the risk of starting the power tool accidentally.*

D. **Store idle power tools out of the reach of children and do not allow persons unfamiliar with the power tool or these instructions to operate the power tool.** *Power tools are dangerous in the hands of untrained users.*

E. **Store idle appliances indoors.** *When not in use, appliances should be stored indoors in a dry and high or locked-up place, out of the reach of children.*

F. **Maintain power tools. Check for misalignment or binding of moving parts, breakage of parts and any other condition that may affect the power tools operation. If damaged, have the power tool repaired before use.** *Many accidents are caused by poorly maintained power tools.*

G. **Keep cutting tools sharp and clean.** *Properly maintained cutting tools with sharp cutting edges are less likely to bind and are easier to control.*

H. **Use the power tool in accordance with these instructions and in the manner intended for the particular type of power tool, taking into account the working conditions and the work to be performed.** *Use of the power tool for operations different from those intended could result in a hazardous situation.*

I. **Keep guards in place and in working order.**

5. **Service**

Have your power tool serviced by a qualified repair person using only identical replacement parts. *This will ensure that the safety of the power tool is maintained.*

6. **Battery Safety**

A. Do not charge appliance in rain, or in wet locations.

B. Do not use battery-operated appliance in the rain.

C. Use only the following type and size battery(ies): Toro battery pack model 88502.

D. Remove or disconnect the battery pack before servicing, cleaning, or removing material from the gardening appliance.

E. Do not dispose of the battery pack in a fire. The cell may explode. Check with local codes for possible special disposal instructions.

F. Do not open or mutilate the battery pack. Released electrolyte is corrosive and may cause damage to the eyes or skin. It may be toxic if swallowed.

G. Exercise care in handling batteries in order not to short the battery pack with conducting materials such as rings, bracelets, and keys. The battery pack or conductor may overheat and cause burns.

SAVE THESE INSTRUCTIONS

Safety and Instructional Decals

Safety decals and instructions are easily visible to the operator and are located near any area of potential danger. Replace any decal that is damaged or missing.

Symbol	Name	Designation/Explanation
DC	Direct current	Type of current
V	Volts	Voltage



decal125-3281

125-3281

Model 51484

1. Warning—read the *Operator's Manual*; do not operate in wet conditions; wear eye protection.



decal121-7657

121-7657

Model 51484T

1. Warning—read the *Operator's Manual*; do not operate in wet conditions; wear eye protection.

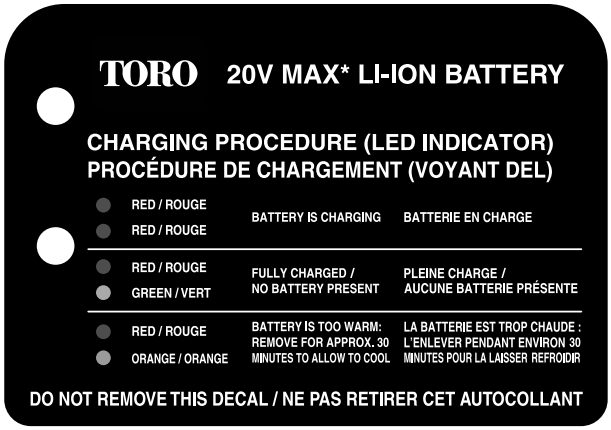

decal121-7691

121-7691



decal125-3279

125-3279



decal125-3295

125-3295

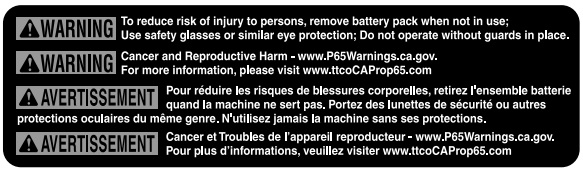

decal138-6681

138-6681

Setup

Loose Parts

Use the chart below to verify that all parts have been shipped.

Procedure	Description	Qty.	Use
1	Auxiliary handle Latch Brace	1 1 1	Installing auxiliary handle.
2	Guard Phillips screw	1 1	Mounting the guard to the base of the trimmer.
3	Wire edge guard	1	Installing the edge guard
4	No parts required	–	Adjust the auxiliary handle, trimmer height, and base position.

1

Installing the Auxiliary Handle

Parts needed for this procedure:

1	Auxiliary handle
1	Latch
1	Brace

1. Position the auxiliary handle on the shaft of the trimmer with the smooth surface facing you (Figure 1).

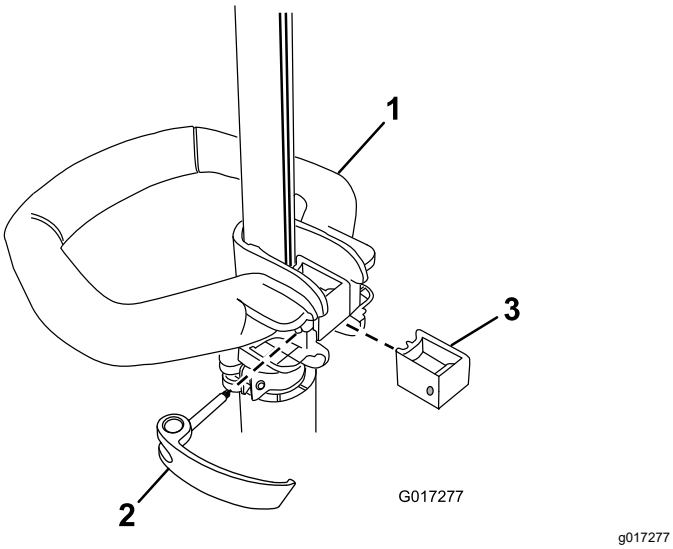

Figure 1

1. Auxiliary handle
2. Latch
3. Brace

2. Slide the brace into the auxiliary handle so that the brace rests in the groove along the shaft (Figure 1).
3. Slide the latch from the left through the handle and brace as shown and tighten the latch screw with a Phillips head screwdriver (Figure 1).

2

Installing the Guard

Parts needed for this procedure:

1	Guard
1	Phillips screw

Procedure

1. Remove the Phillips screw that is taped to the guard (Figure 2).
2. Slide the guard onto the trimmer base as shown in Figure 2.

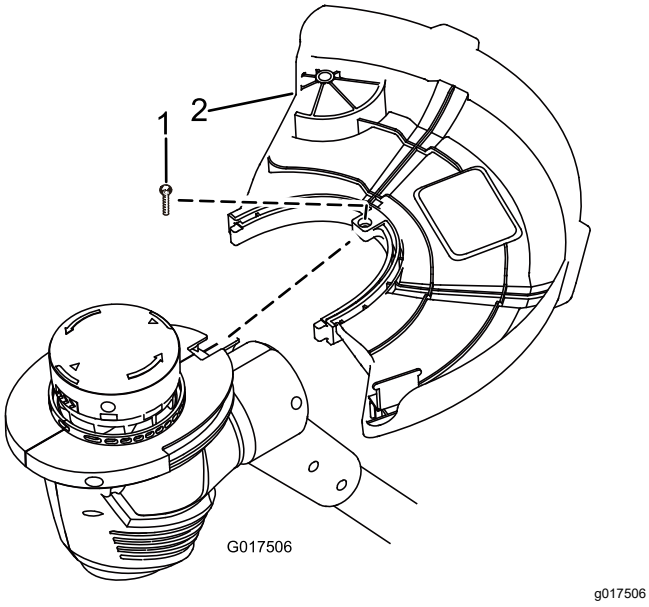

Figure 2

1. Phillips screw
2. Guard

3. Secure the guard using a Phillips screw.

3

Installing the Edge Guard

Parts needed for this procedure:

1	Wire edge guard

Procedure

Insert the ends of the wire edge guard into the holes in the trimmer housing as shown in Figure 3.

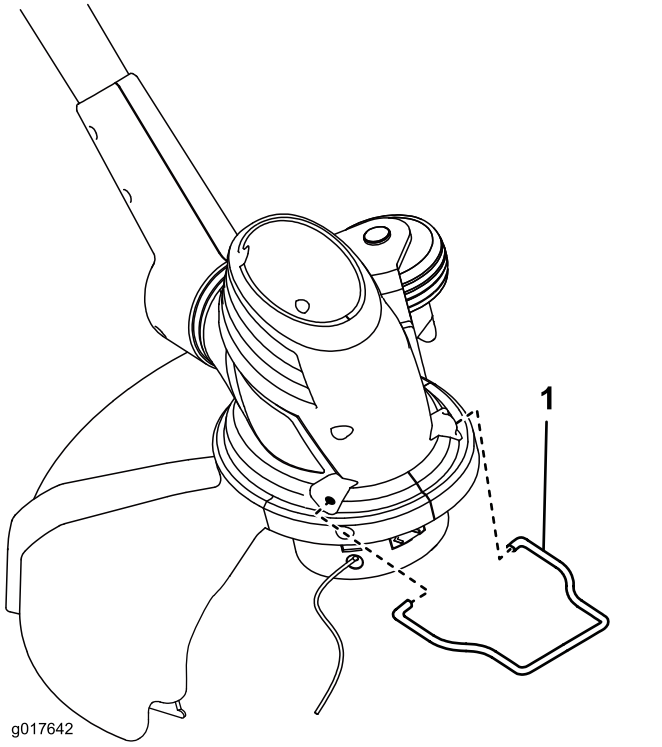

Figure 3

1. Wire edge guard

4

Adjusting the Auxiliary Handle, Trimmer Height, and Base Position

No Parts Required

Procedure

- To adjust the auxiliary handle height, release the auxiliary handle latch, slide the auxiliary handle up or down to the desired height, then secure the auxiliary handle in place by closing the auxiliary latch (Figure 4).

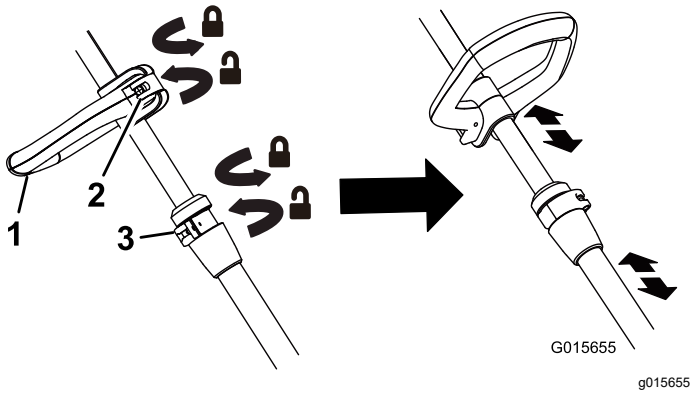

Figure 4

1. Auxiliary handle
2. Auxiliary handle latch
3. Height adjustment latch

- To adjust the trimmer height, open the height adjustment latch, then slide the shaft up or down to desired height, securing it in place with the latch (Figure 4).
- To adjust the position of the base, press down on the rotator button located at the base of the shaft, then move the base to face the desired direction (Figure 5).

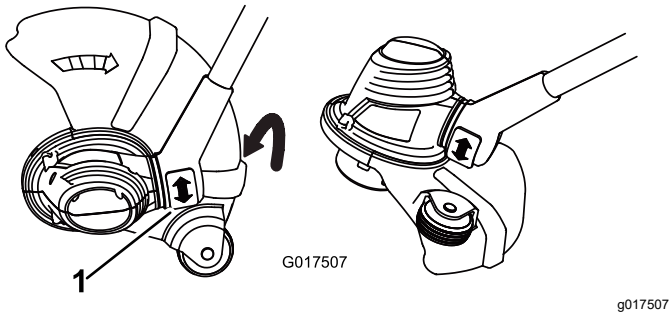

Figure 5

1. Rotator button

Operation

Important: **The battery pack is not fully charged when it is purchased. Before using the trimmer for the first time, place the battery pack in the charger and charge until the LED indicators turn green. Make sure to read all safety precautions. With regular use, it will need shorter charging time. If storing for a prolonged period of time, remove the battery pack. When ready to use again, charge the battery pack until the LED indicators turn green.**

Starting the Trimmer

1. Align the tongue of the battery pack with the cavity in the handle housing (Figure 6).

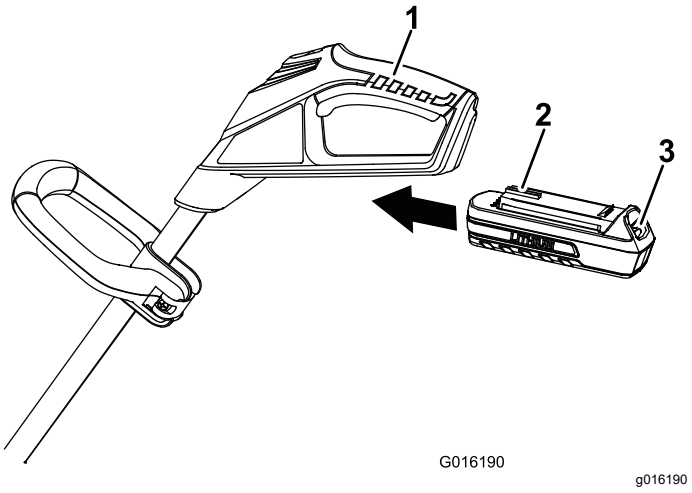

Figure 6

1. Trigger handle
2. Tongue
3. Latch

2. Grasp the trigger handle (Figure 6).
3. Push the battery pack into the handle until the latch locks into place.
4. To start the trimmer, slide the lock switch back to the ON position, then squeeze the trigger (Figure 6).

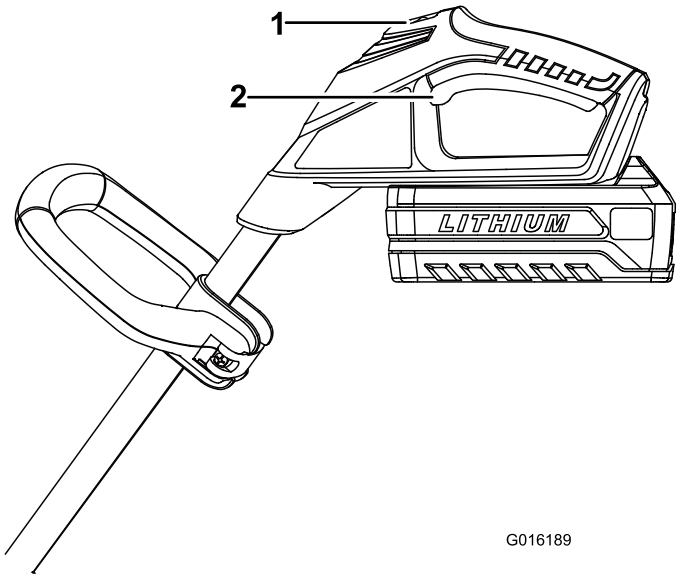

Figure 7

1. Lock switch
2. Trigger

Stopping the Trimmer

To stop the trimmer, release the trigger.

Charging the Battery Pack

Important: **For best results, charge your battery tool where the temperature is more than 0°C (32°F) but less than 40°C (104°F). To reduce the risk of serious personal injury, do not store it outside or in vehicles. Charging time will increase if you do not charge it within this range.**

1. Turn the battery pack upside down and line up the battery terminal with the slot in the charger (Figure 8 and Figure 9).

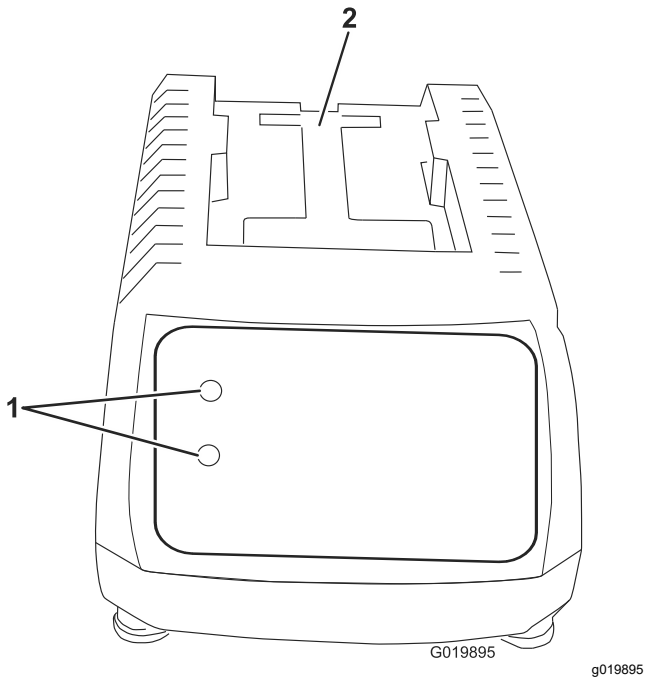

Figure 8

1. LED indicators
2. Insert the battery pack here.

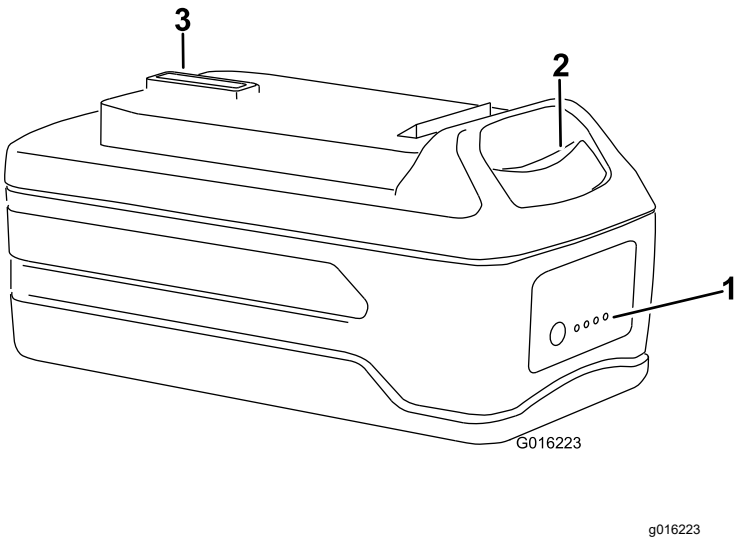

Figure 9

1. LED indicators (level of charge)
2. Release button
3. Battery terminal

2. Slide the battery pack into the charger until it clicks into place.
3. To remove the battery pack, press down on the release button and slide the battery pack backward out of the charger.

4. Refer to the table below to interpret the LED indicators on the battery charger.

Top	Bottom	Indicates
Red	Red	Battery pack is charging
Red	Green	Battery pack is charged
Red	Orange	Battery pack is too warm: Remove for approximately 30 minutes

Advancing the Line

Note: The trimmer is equipped with an auto-feed head.

1. With the trimmer running, release the switch trigger.
2. Wait two seconds, then slide the lock switch back to the ON position and squeeze the trigger.

   Note: The line extends approximately 6 mm (1/4 inch) with each stop and start of the switch trimmer until the line reaches the length of the grass deflector blade.
3. Resume trimming.

Advancing the Line Manually

Remove the battery from the trimmer, then push the red button at the base of the spool retainer while pulling on the trimmer line to manually advance the line.

Trimming



Figure 10

Edging

As an edger, press the rotator button and rotate the head as shown in Figure 11.

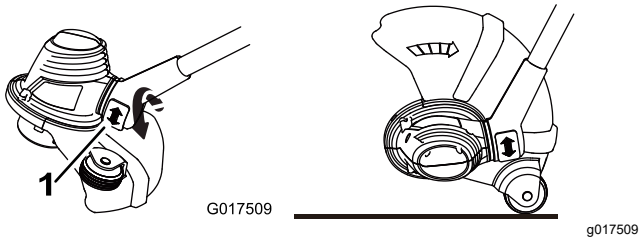

Figure 11

1. Rotator button

Operating Tips

- Keep the trimmer tilted toward the area being cut; this is the best cutting area.
- The string trimmer cuts when passing the unit from left to right. This will avoid throwing debris at you.
- Use the tip of the string to do the cutting; do not force string head into uncut grass.
- Wire and picket fences cause extra string wear, even breakage. Stone and brick walls, curbs, and wood may wear string rapidly.
- Avoid trees and shrubs. Tree bark, wood moldings, siding, and fence posts can easily be damaged by the strings.

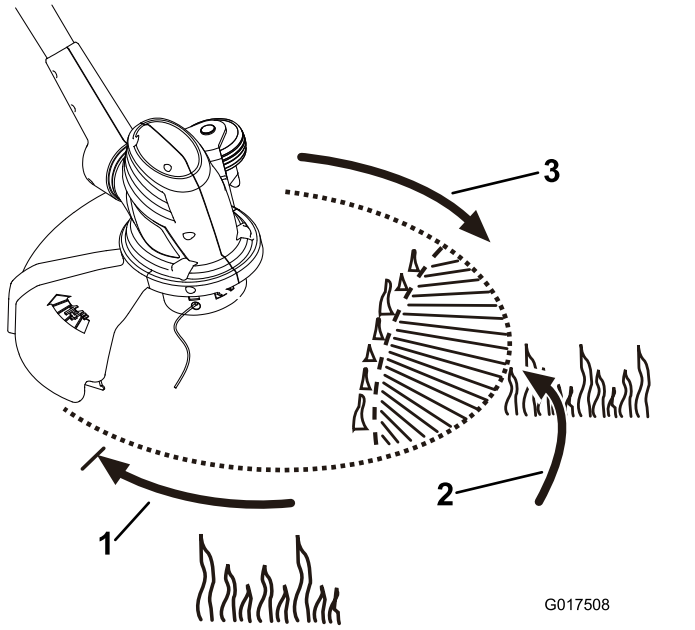

Figure 12

1. Direction of rotation
2. Ideal cutting range
3. String path

Maintenance

After each use of the trimmer, complete the following:

1. Remove the battery from the trimmer.
2. Wipe the trimmer clean with a damp cloth. Do not hose the trimmer down or submerge it in water.

⚠ CAUTION

The line cut-off blade on the deflector is sharp and can cut you.

Do not use your hands to clean the deflector shield and blade.

3. Wipe or scrape clean the cutting head area any time there is an accumulation of debris.
4. Check and tighten all fasteners. If any part is damaged or lost, repair or replace it.
5. Brush debris away from air intake vents on motor housing to prevent the motor from overheating.

Replacing the Spool

Use only 1.65 mm (0.065 inch) diameter monofilament string. Use original manufacturer's replacement string for best performance (Toro Part No. 88532 or 88524).

Important: **Using a larger diameter string will cause the motor to overheat and fail.**

1. Remove the battery.
2. Push in the tabs on the side of the spool retainer (Figure 13).

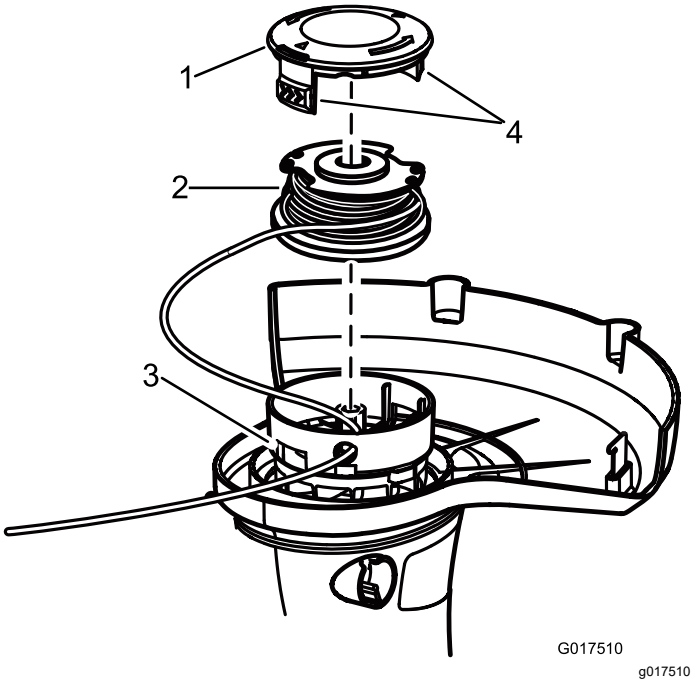

Figure 13

1. Spool retainer
2. Spool
3. Slots
4. Tabs

3. Pull the spool retainer up to remove it and remove the spool.
4. To install the new spool, ensure that the string is captured in one of the retaining slots on the new spool. Make sure the end of the string extends approximately 6 inches (152 mm).
5. Install the new spool so that the string aligns with the eyelet in the string head. Thread the string into the eyelet.
6. Pull the string extending from the string head so the string releases from the slot in the spool.
7. Reinstall the spool retainer by depressing tabs into slots and pushing down until spool retainer clicks into place.

Replacing the String

1. Remove the battery.
2. Remove the spool; refer to Replacing the Spool (Figure 13).

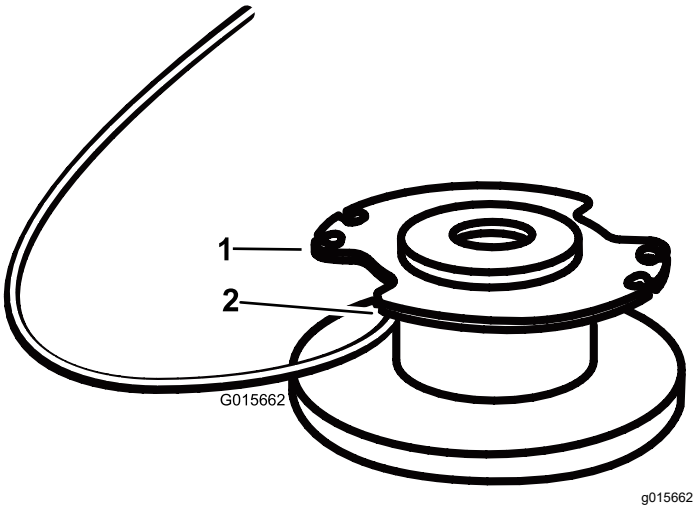

Figure 14

1. Spool
2. Hole

Note: Remove any old string remaining on the spool.

3. The spool accepts up to 4.5 m (15 ft) of string.**Use only 1.65 mm (0.065 inch) diameter monofilament string.**

   Note: Do not use any other gauge or type of string, as this could damage the trimmer.

4. Insert the string into the anchor hole in the upper part of the spool (Figure 14). Wind the string onto the spool in the direction shown by the arrows on the spool.
5. Place the string in the slot on the upper spool flange, leaving about 152 mm 6 inch (6 inches) extended beyond the slot.

   Note: Do not overfill. After winding the string, there should be at least 6 mm 1/4 inch (1/4 inch) between the wound string and the outside edge of the spool.

6. Replace the spool and the spool retainer. Refer to Replacing the Spool (page 10) earlier in this manual.

Preparing the Battery Pack for Recycling

Important: **Upon removal, cover the terminals of the battery pack with heavy-duty adhesive tape. Do not attempt to destroy or disassemble the battery pack or remove any of its components. Recycle or properly dispose of lithium-ion battery packs at a battery recycling facility.**

RECYCLE RBRC Li-ion 1.800.822.8837	For more information on recycling lithium-ion battery packs and to locate the battery recycling facility closest to you, visit www.Call2Recycle.org (US and Canada only). If you are located outside of the US and Canada, please contact your authorized Toro distributor.

Service

Should this item need service, take the product to your Authorized Service Dealer.

Storage

- Clean all foreign material from the product.
- Store it in a well-ventilated place that is inaccessible to children.
- Keep away from corrosive agents such as garden chemicals and de-icing salts.

Troubleshooting

Using the battery when it is hot can reduce the operating time. The battery automatically stops working when it is overheated to prevent damage to it. Remove the battery from the charger and allow it to cool before placing it back into the trimmer.

Using the battery when there is moisture on the leads can cause the trimmer to malfunction. Allow the battery to dry or wipe it dry before placing it back into the trimmer.

California Proposition 65 Warning Information

What is this warning?

You may see a product for sale that has a warning label like the following:



WARNING: Cancer and Reproductive Harm—www.p65Warnings.ca.gov.

What is Prop 65?

Prop 65 applies to any company operating in California, selling products in California, or manufacturing products that may be sold in or brought into California. It mandates that the Governor of California maintain and publish a list of chemicals known to cause cancer, birth defects, and/or other reproductive harm. The list, which is updated annually, includes hundreds of chemicals found in many everyday items. The purpose of Prop 65 is to inform the public about exposure to these chemicals.

Prop 65 does not ban the sale of products containing these chemicals but instead requires warnings on any product, product packaging, or literature with the product. Moreover, a Prop 65 warning does not mean that a product is in violation of any product safety standards or requirements. In fact, the California government has clarified that a Prop 65 warning "is not the same as a regulatory decision that a product is 'safe' or 'unsafe.'" Many of these chemicals have been used in everyday products for years without documented harm. For more information, go to https://oag.ca.gov/prop65/faqs-view-all.

A Prop 65 warning means that a company has either (1) evaluated the exposure and has concluded that it exceeds the "no significant risk level"; or (2) has chosen to provide a warning based on its understanding about the presence of a listed chemical without attempting to evaluate the exposure.

Does this law apply everywhere?

Prop 65 warnings are required under California law only. These warnings are seen throughout California in a wide range of settings, including but not limited to restaurants, grocery stores, hotels, schools, and hospitals, and on a wide variety of products. Additionally, some online and mail order retailers provide Prop 65 warnings on their websites or in catalogs.

How do the California warnings compare to federal limits?

Prop 65 standards are often more stringent than federal and international standards. There are various substances that require a Prop 65 warning at levels that are far lower than federal action limits. For example, the Prop 65 standard for warnings for lead is 0.5 µg/day, which is well below the federal and international standards.

Why don't all similar products carry the warning?

- Products sold in California require Prop 65 labelling while similar products sold elsewhere do not.
- A company involved in a Prop 65 lawsuit reaching a settlement may be required to use Prop 65 warnings for its products, but other companies making similar products may have no such requirement.
- The enforcement of Prop 65 is inconsistent.
- Companies may elect not to provide warnings because they conclude that they are not required to do so under Prop 65; a lack of warnings for a product does not mean that the product is free of listed chemicals at similar levels.

Why does Toro include this warning?

Toro has chosen to provide consumers with as much information as possible so that they can make informed decisions about the products they buy and use. Toro provides warnings in certain cases based on its knowledge of the presence of one or more listed chemicals without evaluating the level of exposure, as not all the listed chemicals provide exposure limit requirements. While the exposure from Toro products may be negligible or well within the "no significant risk" range, out of an abundance of caution, Toro has elected to provide the Prop 65 warnings. Moreover, if Toro does not provide these warnings, it could be sued by the State of California or by private parties seeking to enforce Prop 65 and subject to substantial penalties.