Form No. 3424-963 Rev B

20V Max Li-Ion Battery and Battery Charger

Model No. 88500—Serial No. 319000001 and Up

Model No. 88502—Serial No. 319000001 and Up

Operator's Manual

You may contact Toro directly at www.Toro.com for product and accessory information, help finding a dealer, the complete warranty details, or to register your product.

⚠ WARNING

CALIFORNIA
Proposition 65 Warning

The power cord on this product contains lead, a chemical known to the State of California to cause birth defects or other reproductive harm. Wash hands after handling.

Safety

Important safety instructions—Save these instructions.

⚠ DANGER

To reduce the risk of fire or electric shock, carefully follow these instructions:

1. **Be sure voltage selector is in correct voltage position before plugging in.**
2. **For use in the U.S.A., the voltage selector switch must be placed in the 120 volt position. For use in countries other than the U.S.A., the voltage selector may need to be placed in other than the 120 volt position. Confirm the voltage available at each country location before using the product.**
3. **For connection to a supply not in the U.S.A., use an attachment plug adapter of the proper configuration for the power outlet, if needed.**

⚠ CAUTION

The battery used in this device may present a risk of fire or chemical burn if mistreated.

Do not disassemble, heat above 104 degrees F (40 degrees C), or incinerate. Replace battery with Toro genuine batteries only. Use of another battery may present a risk of fire or explosion.

⚠ CAUTION

Dispose of a used battery promptly. Keep away from children. Do not disassemble and do not dispose of in fire.

⚠ CAUTION

Overheating batteries can cause fire and severe burns.

Do not open, crush, heat above 104 degrees F (40 degrees C), or incinerate. Follow the manufacturer's instructions.

This power unit is intended to be correctly orientated in a vertical or floor mounted position.

© 2020—The Toro® Company
8111 Lyndale Avenue South
Bloomington, MN 55420

Register at www.Toro.com.

Original Instructions (EN)
Printed in China
All Rights Reserved

3424-963

Safety and Instructional Decals

Safety decals and instructions are easily visible to the operator and are located near any area of potential danger. Replace any decal that is damaged or missing.



decal125-3279

125-3279

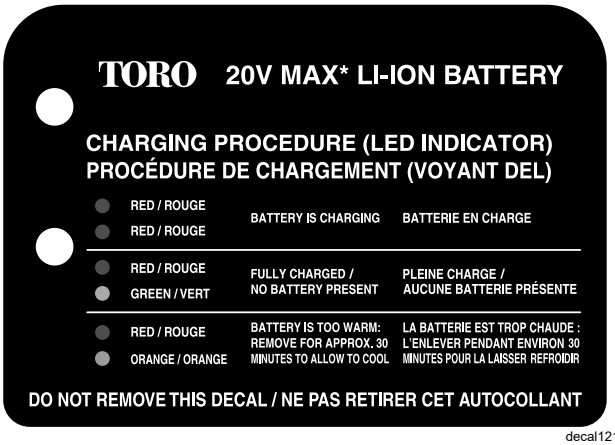

decal121-7691

121–7691



decal125-3295

125–3295

Charging the Battery Pack

1. Turn the battery upside down and line up the battery terminal with the slot in the charger (Figure 1 and Figure 2).

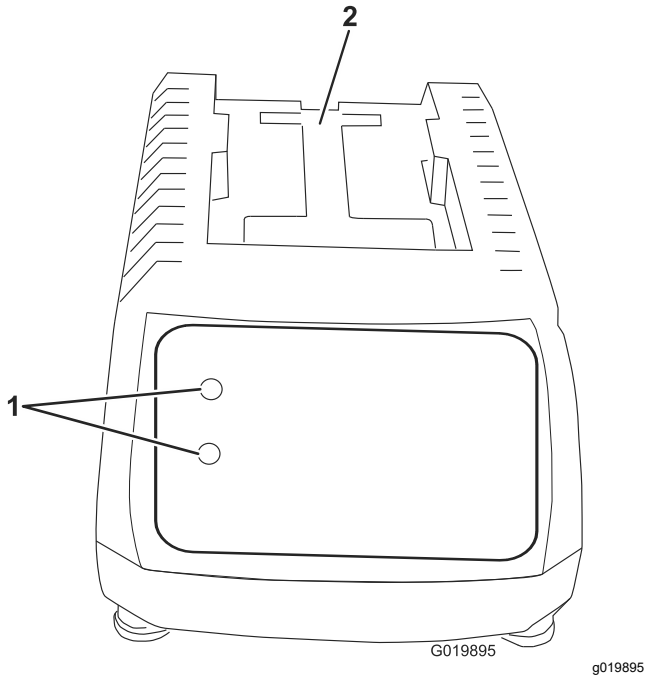

Figure 1

1. LED indicators
2. Insert battery here

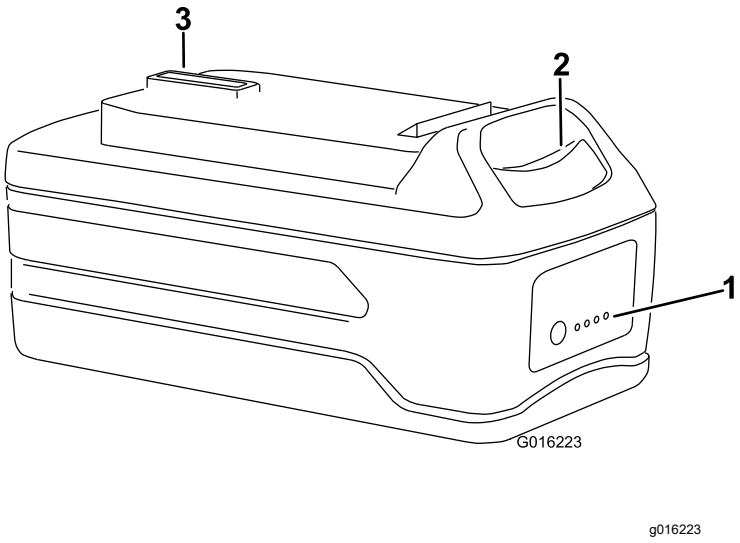

Figure 2

1. LED indicators (level of charge)
2. Release button
3. Battery terminal

2. Slide the battery into the charger until it clicks into place.
3. To remove the battery, press down on the release button and slide the battery backwards out of the charger.
4. Refer to the table below to interpret the LED indicators on the battery charger.

LED COLOR		
Top	Bottom	Indicates:
Red	Red	Battery is charging
Red	Green	Fully charged
Red	Orange	Battery is too warm: Remove for approximately 30 minutes

Inserting the Battery into the Trimmer

1. Align the tongue of the battery pack with the cavity in the handle housing (Figure 3).

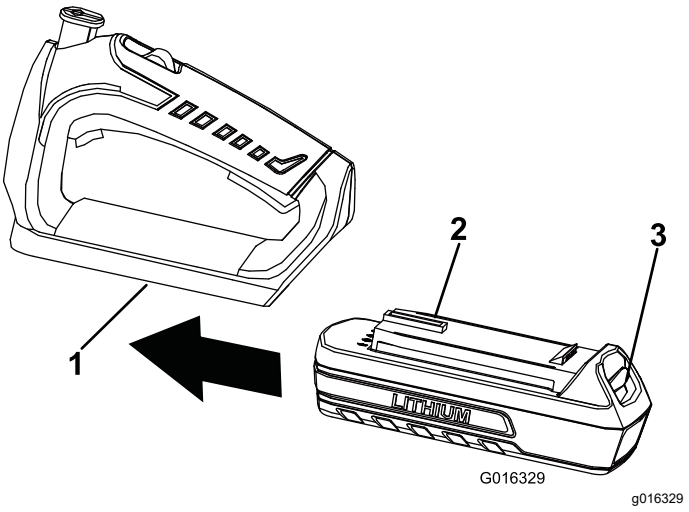

Figure 3

Hedge trimmer handle shown

1. Cavity
2. Tongue
3. Latch

2. Grasp the trimmer handle.
3. Push the battery pack into the handle until the latch locks into place.

Important: **The battery pack is not fully charged when it is purchased. Before using the trimmer for the first time, place the battery pack in the charger and charge it until the LED indicators turn green. Make sure to read all safety precautions. With regular use, it will need shorter charging time. If storing for a prolonged period of time, remove the battery. When ready to use again, charge the battery pack until the LED indicators turn green.**

Battery Pack Preparation For Recycling

⚠ WARNING

Upon removal, cover the battery pack's terminals with heavy-duty adhesive tape. Do not attempt to destroy or disassemble the battery pack or remove any of its components. Lithium-ion batteries must be recycled or disposed of properly at the nearest battery recycling facility.

Troubleshooting

Using the battery when it is hot can reduce the operating time. The battery will automatically stop working when it is overheated to prevent damage to it. Remove the battery from the charger and allow it to cool before placing it back into the trimmer.

Using the battery when there is moisture on the leads can cause the trimmer to malfunction. Allow the battery to dry or wipe it dry before placing it back into the trimmer.

Notes:

California Proposition 65 Warning Information

What is this warning?

You may see a product for sale that has a warning label like the following:



WARNING: Cancer and Reproductive Harm—www.p65Warnings.ca.gov.

What is Prop 65?

Prop 65 applies to any company operating in California, selling products in California, or manufacturing products that may be sold in or brought into California. It mandates that the Governor of California maintain and publish a list of chemicals known to cause cancer, birth defects, and/or other reproductive harm. The list, which is updated annually, includes hundreds of chemicals found in many everyday items. The purpose of Prop 65 is to inform the public about exposure to these chemicals.

Prop 65 does not ban the sale of products containing these chemicals but instead requires warnings on any product, product packaging, or literature with the product. Moreover, a Prop 65 warning does not mean that a product is in violation of any product safety standards or requirements. In fact, the California government has clarified that a Prop 65 warning "is not the same as a regulatory decision that a product is 'safe' or 'unsafe.'" Many of these chemicals have been used in everyday products for years without documented harm. For more information, go to https://oag.ca.gov/prop65/faqs-view-all.

A Prop 65 warning means that a company has either (1) evaluated the exposure and has concluded that it exceeds the "no significant risk level"; or (2) has chosen to provide a warning based on its understanding about the presence of a listed chemical without attempting to evaluate the exposure.

Does this law apply everywhere?

Prop 65 warnings are required under California law only. These warnings are seen throughout California in a wide range of settings, including but not limited to restaurants, grocery stores, hotels, schools, and hospitals, and on a wide variety of products. Additionally, some online and mail order retailers provide Prop 65 warnings on their websites or in catalogs.

How do the California warnings compare to federal limits?

Prop 65 standards are often more stringent than federal and international standards. There are various substances that require a Prop 65 warning at levels that are far lower than federal action limits. For example, the Prop 65 standard for warnings for lead is 0.5 µg/day, which is well below the federal and international standards.

Why don't all similar products carry the warning?

- Products sold in California require Prop 65 labelling while similar products sold elsewhere do not.
- A company involved in a Prop 65 lawsuit reaching a settlement may be required to use Prop 65 warnings for its products, but other companies making similar products may have no such requirement.
- The enforcement of Prop 65 is inconsistent.
- Companies may elect not to provide warnings because they conclude that they are not required to do so under Prop 65; a lack of warnings for a product does not mean that the product is free of listed chemicals at similar levels.

Why does Toro include this warning?

Toro has chosen to provide consumers with as much information as possible so that they can make informed decisions about the products they buy and use. Toro provides warnings in certain cases based on its knowledge of the presence of one or more listed chemicals without evaluating the level of exposure, as not all the listed chemicals provide exposure limit requirements. While the exposure from Toro products may be negligible or well within the "no significant risk" range, out of an abundance of caution, Toro has elected to provide the Prop 65 warnings. Moreover, if Toro does not provide these warnings, it could be sued by the State of California or by private parties seeking to enforce Prop 65 and subject to substantial penalties.



Count on it.