Form No. 3428-488 Rev C

TORO®

Count on it.

Parts Catalog

Workman® GTX

Utility Vehicle with Bucket Seat

Model No. 07042—Serial No. 403446001 and Up

Register at www.Toro.com.
Original Instructions (EN)

3428-488 C

Ordering Replacement Parts

To order replacement parts, please supply the part number, the quantity, and the description of each part desired.

Understanding Reference Numbers

Each identified part in an illustration has a reference number. The reference number for a part also appears in the parts list, along with other information about the part.

This catalog uses two special reference number formats, one to indicate parts in a service assembly and another to indicate the quantity of a given part in an illustration.

Service Assembly Reference Numbers

Parts in service assemblies have reference numbers in the form a:b. The a represents the reference number of the entire service assembly and the b represents a sequential number unique to each part within the service assembly.

For example, a wheel assembly might be identified by reference number 6, the tire by 6:1, the valve by 6:2, and the wheel by 6:3. When you order the assembly identified by reference number 6, you receive all parts identified by reference numbers 6:1,6:2, and 6:3. However, you may also order any part individually. Reference numbers of this type appear in illustration and in parts lists.

Reference Numbers Indicating Quantity

In an illustration, if a reference number indicates more than one part, the reference number has the form nX y. The n represents the quantity of the part, the X is the multiplication symbol, and the y represents the reference number.

For example, in an illustration, the reference number 2X 37 means that two of the parts identified by reference number 37 are indicated.

Contents

Front Frame and Suspension Assembly 4
Floor Plate and Rear Suspension Mount Assembly 5
Rear Frame and Suspension Assembly 6
Frame Mount and Rear Shock/Spring Assembly 7
Brake Assembly 8
Master Cylinder Assembly No. 104-6782 9
Brake Caliper Assembly No. 127-7424 10
Steering Assembly 11
Pedal and Control Assembly 12
Hood and Fender Assembly 13
Dash Assembly 14
Seatbase Assembly 15
Cargo Bed Assembly 16
Cargo Bed and Tailgate Assembly No. 131-8592 17
Engine Assembly 18
Starter Generator Assembly No. 131-8444 20
Secondary Clutch Assembly No. 119-6011 21
Engine Assembly No. 131-8502 22
Air Cleaner Assembly No. 99-7120 26
Primary Clutch Assembly No. 138-0095 27
Rear Wheel and Transaxle Assembly 28
Transaxle Assembly No. 131-3486 30
Battery and Cable Assembly 32
Electrical Assembly 33
Fuel System Assembly 34
Fuel Tank Assembly No. 127-7849 35
Attachments and Accessories 36

© 2020—The Toro® Company
8111 Lyndale Avenue South
Bloomington, MN 55420

Contact us at www.Toro.com.
Printed in the USA.
All Rights Reserved

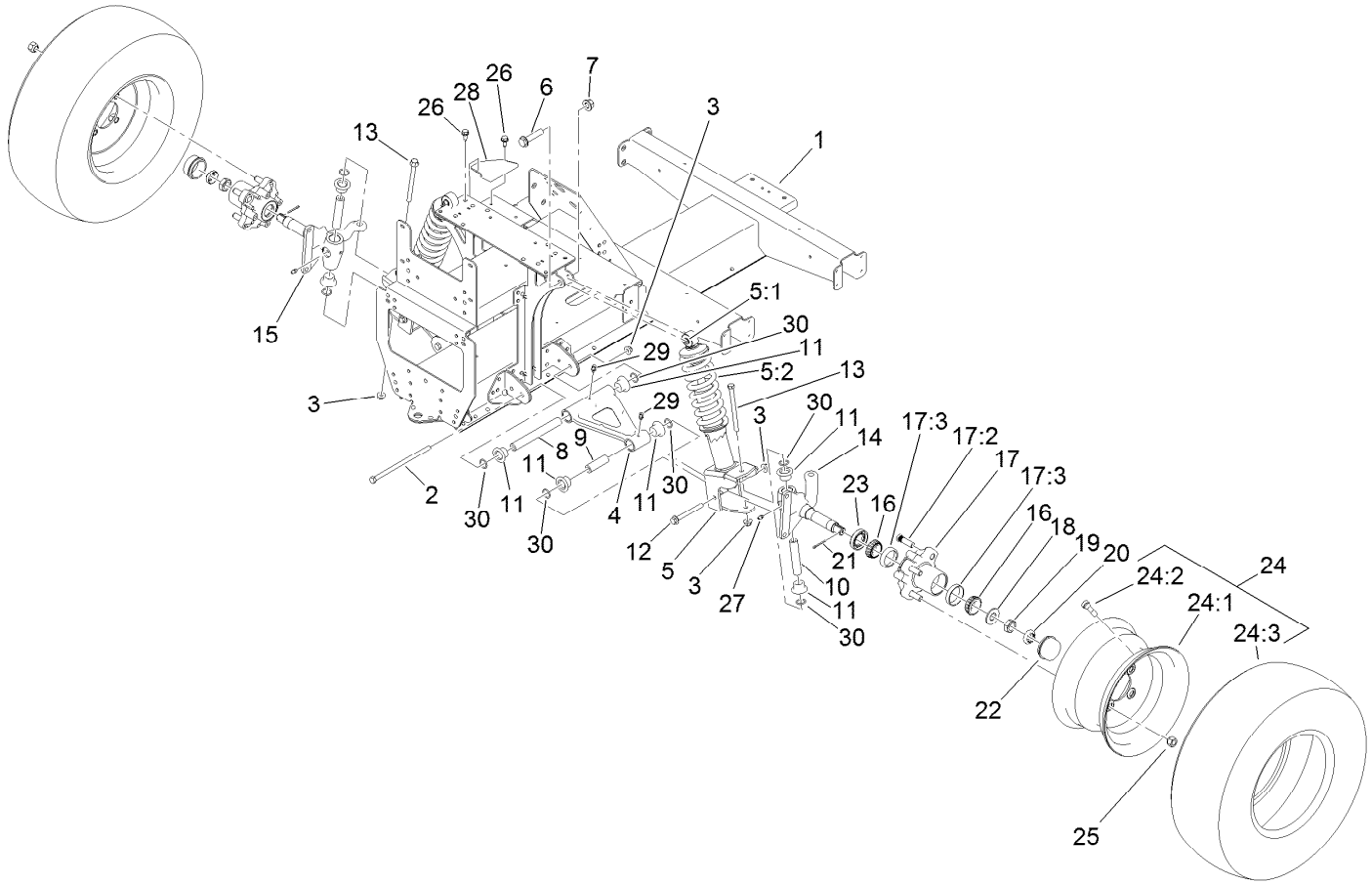

Front Frame and Suspension Assembly

Ref.	Part Number	Qty.	Description
1	127-7718-03	1	Frame-Front
2	131-8572	2	Screw-HF
3	104-8301	6	Nut-HF, NI
4	131-8345	2	*obs* A-Arm
5	137-6716	2	Strut ASM (250 Lb)
5:1	131-8574	1	Isolator-Shock
5:2	137-6719	1	Spring-Compression, 250Lb
6	3234-46	2	Screw-HHF
7	99-5107	2	Nut-Lock
8	131-8581	2	Sleeve-Control Arm, Inner
9	131-8583	2	Sleeve-Control Arm, Outer
10	131-8582	2	Sleeve-Kingpin
11	133-0643	12	Bushing-Flange, O-Ring
12	116-4701	2	Screw-HHF
13	131-8571	2	Screw-HF
14	127-8825-03	1	Spindle-LH
15	127-8826-03	1	Spindle-RH
16	254-94	4	Bearing-Cone, Tapered
17	127-8851	2	Front Hub ASM

Ref.	Part Number	Qty.	Description
17:2	10-6830	4	Stud-Type, Drive
17:3	254-72	2	Bearing-Cup, Tapered
18	93-0309	2	Washer-Tab
19	3220-7	2	Nut-Jam
20	93-0307	2	Nut-Lock, Retainer
21	3272-12	2	Pin-Cotter
22	241-119	2	Cap-Dust
23	112-1690	2	Seal-Oil
24	131-8319	2	Tire/Wheel ASM
24:1	131-8317	1	Wheel
24:2	232-27	1	Stem-Valve
24:3	131-8318	1	Tire
25	242-50	8	Nut-Lug
26	32144-70	2	Screw-HWHTF
27	302-5	2	Fitting-Grease
28	131-8339-03	1	Reinforcement-Tower
29	302-40	4	Fitting-Grease, 90 DEG
30	237-54	12	O-Ring

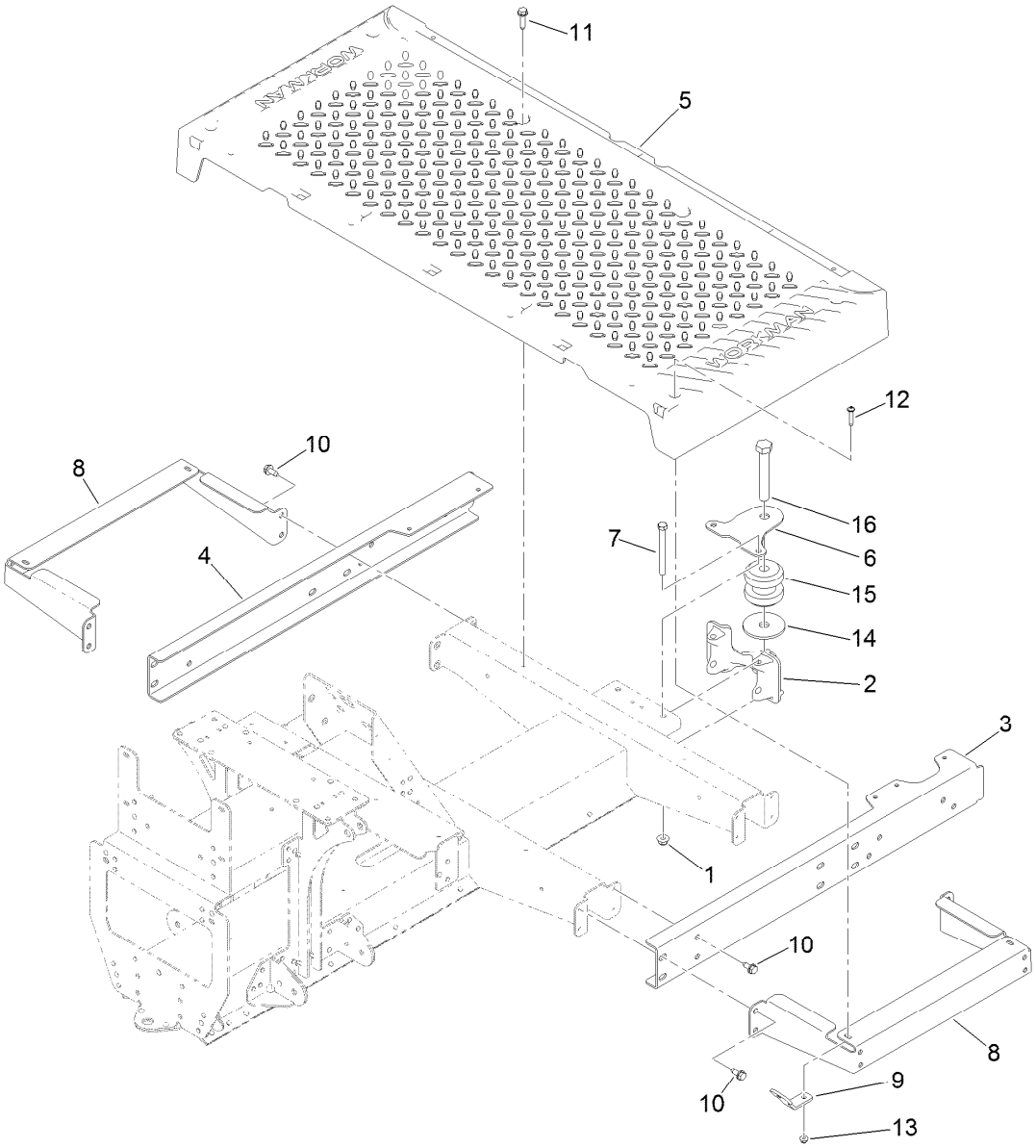

Floor Plate and Rear Suspension Mount Assembly

Ref.	Part Number	Qty.	Description
1	104-8301	2	Nut-HF, NI
2	131-8466	1	Mount-Suspension, Rear
3	127-7820-03	1	Channel-Frame, Front (LH)
4	127-7821-03	1	Channel-Frame, Front (RH)
5	127-7829	1	Plate-Floor
6	131-8597	1	Plate-Gimbal, Upper
7	323-42	2	Screw-HH
8	127-7837-03	2	Bracket-Support, Floor Plate

Ref.	Part Number	Qty.	Description
9	127-7832	2	Bracket-Angle
10	32144-70	16	Screw-HWHTF
11	32144-49	4	Screw-HWHTF
12	132-6777	4	Screw-TTH
13	104-7201	4	Nut-HF
14	110-4549	1	Washer-Snubbing
15	131-8480	1	Isolator
16	104-5877	1	Screw-HH

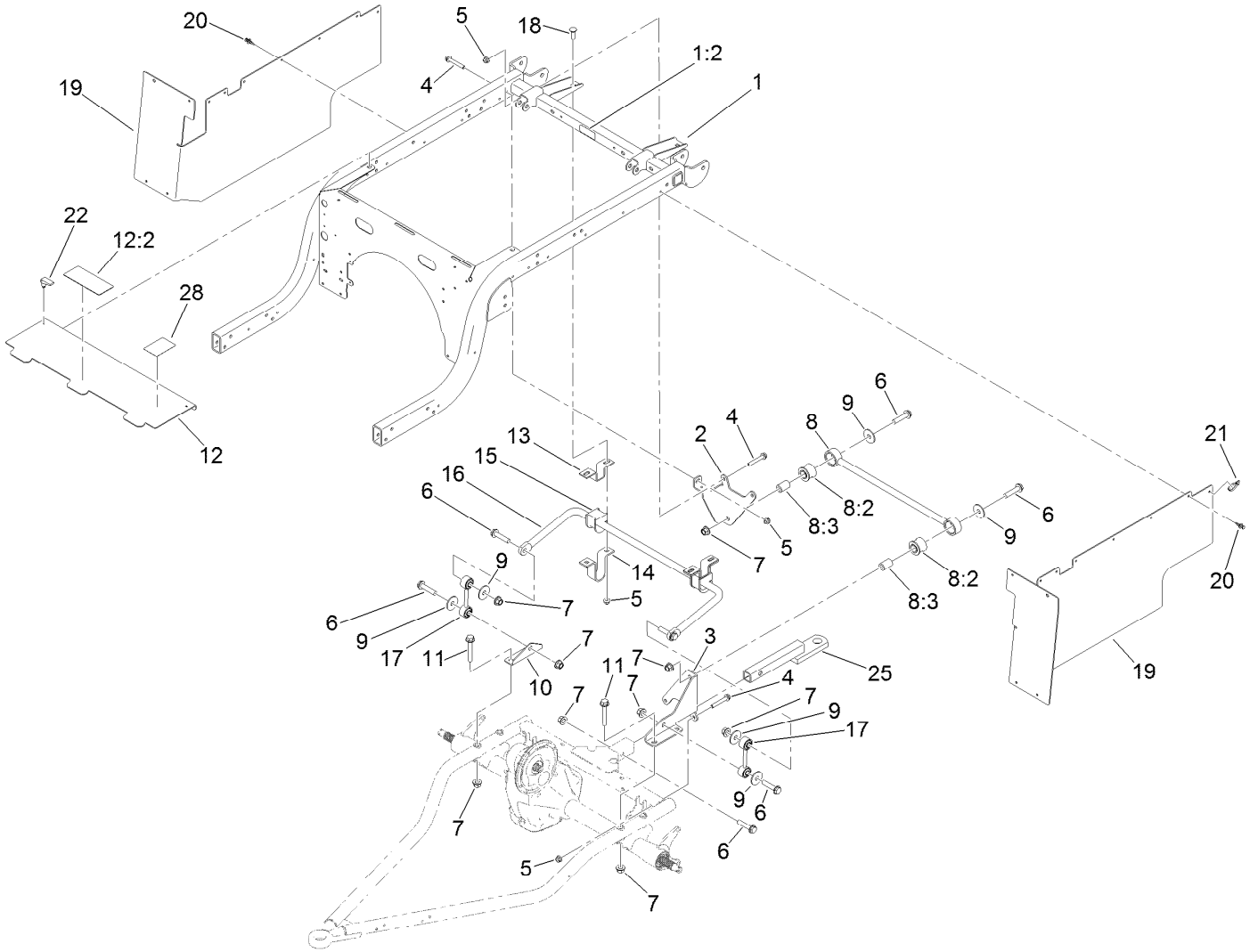

Rear Frame and Suspension Assembly

Ref.	Part Number	Qty.	Description
1	131-8594	1	*obs* Rear Frame ASM
1:2	115-2047	1	Decal-Surface, Hot
2	127-7412-03	1	Bracket-Bar, Stabilizer
3	127-7411-03	1	Bracket-Bar, Stabilizer
4	3234-39	5	Screw-HHF
5	104-8301	9	Nut-HF, NI
6	3234-46	7	Screw-HHF
7	99-5107	11	Nut-Lock
8	109-5013	1	Panhard Rod ASM
8:2	109-5009	2	Bushing-Suspension, Rubber
8:3	109-5010	2	Spacer
9	86-1990	6	Washer-Thrust
10	131-8315	1	Bracket-Link, Sway Bar
11	3234-40	4	Screw-HF

Ref.	Part Number	Qty.	Description
12	131-8595	1	Panel-Cover
12:2	99-7345	1	Decal-Warning
13	87-3890-03	2	Bracket-Bar, Sway
14	87-4010-03	2	Clamp-Bar, Sway
15	87-3910	2	Bushing-Rubber
16	131-8310-03	1	Bar-Sway, Anti
17	131-8394	2	Link-Bar, Sway
18	3231-25	4	Bolt-CARR
19	131-8346	2	Panel-Side
20	125-9622	20	Rivet-Blind
21	3290-378	2	Tie-Cable
22	74-5950	2	Latch-Swell
25	137-6741	1	Ball Mount ASM
28	138-3518	1	Decal-Reference, Quick

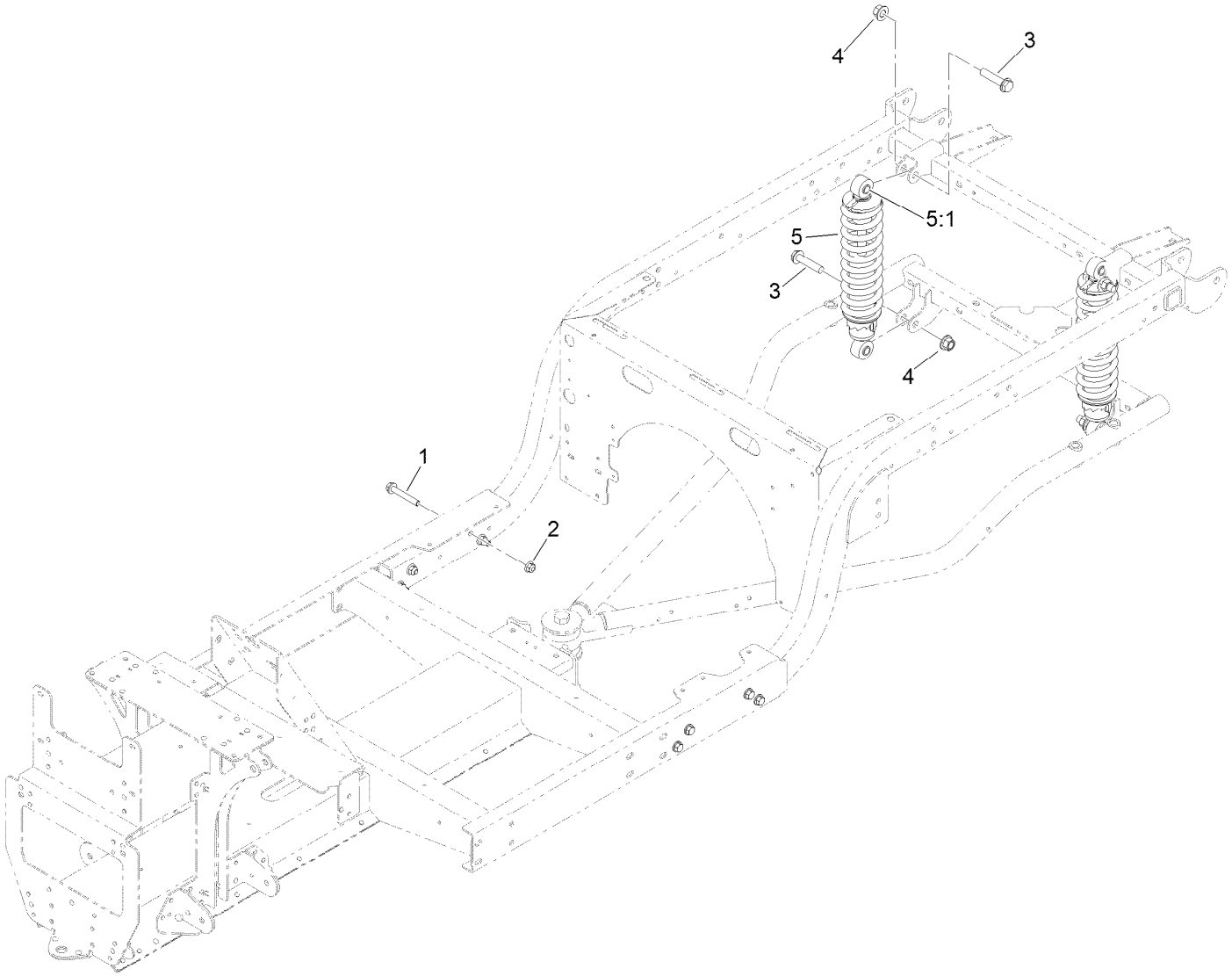

Frame Mount and Rear Shock/Spring Assembly

Ref.	*Part Number*	*Qty.*	*Description*
1	3234-39	8	Screw-HHF
2	104-8301	8	Nut-HF, NI
3	3234-46	4	Screw-HHF
4	99-5107	4	Nut-Lock
5	131-3455	2	Shock/Spring ASM
5:1	131-8574	2	Isolator-Shock

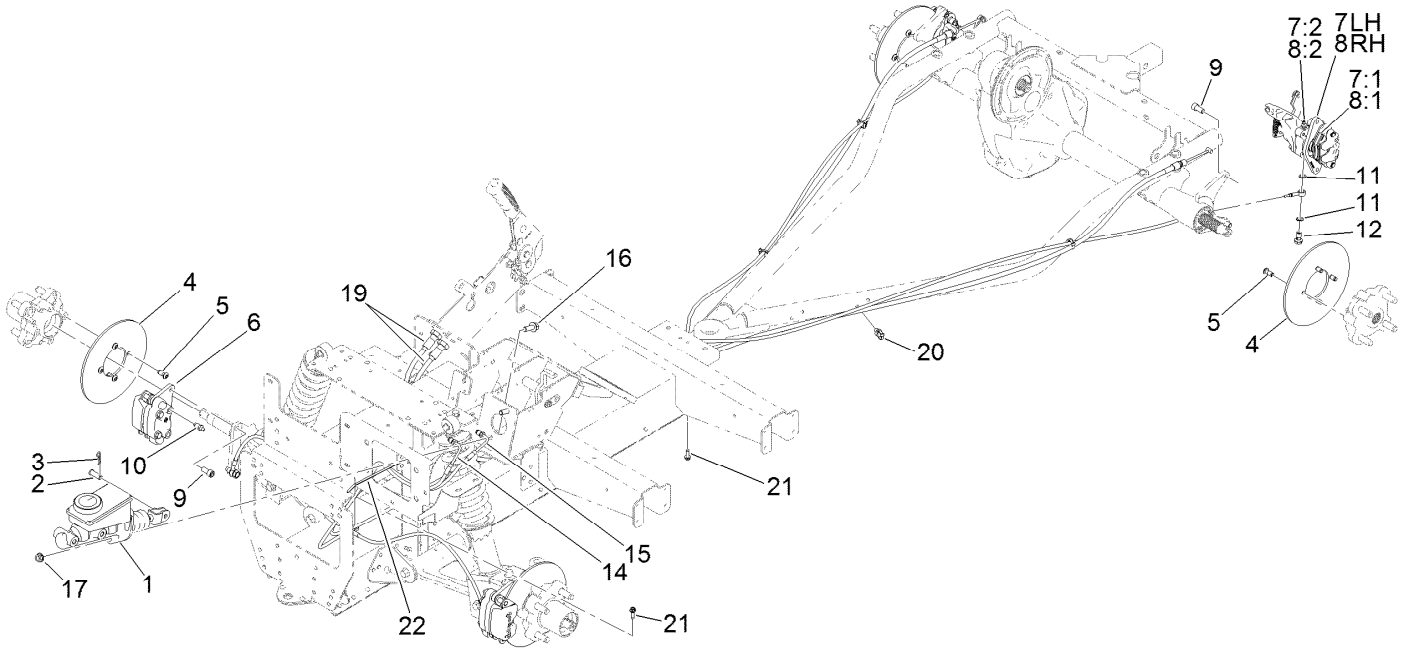

Brake Assembly

Ref.	Part Number	Qty.	Description
1	104-6782	1	Master Cylinder ASM
2	283-2	1	Pin-Clevis
3	1-806003	1	Pin-Cotter
4	136-6295	4	Rotor-Brake
5	121-9671	16	Screw-HSBH
6	127-7424	2	Brake Caliper ASM
7	131-8313	1	Caliper-Rear, LH
7:1	131-8518	1	Pad Kit (Set Of 4)
7:2	119-9509	1	Screw-Bleed
7:3	136-6328	2	Spring-Rattle, Anti ●
8	131-8314	1	Caliper-Rear, RH
8:1	131-8518	1	Pad Kit (Set Of 4)
8:2	119-9509	1	Screw-Bleed
8:3	136-6328	2	Spring-Rattle, Anti ●
9	131-8573	8	Screw-HSH
10	119-9509	2	Screw-Bleed
11	115-2341	8	Washer-Banjo
12	120-4875	4	Bolt-Flange, Banjo
14	127-7781	1	Brake Line-Front
15	127-7782	1	Brake Line-Rear
16	3234-11	2	Screw-HHF
17	3290-357	2	Nut-HHF, Whiz
19	131-8406	2	Cable-Park Brake
20	32180-030	4	Clip-Tie
21	49-2040	2	Screw-HWHTF
22	3290-378	1	Tie-Cable

● Not illustrated

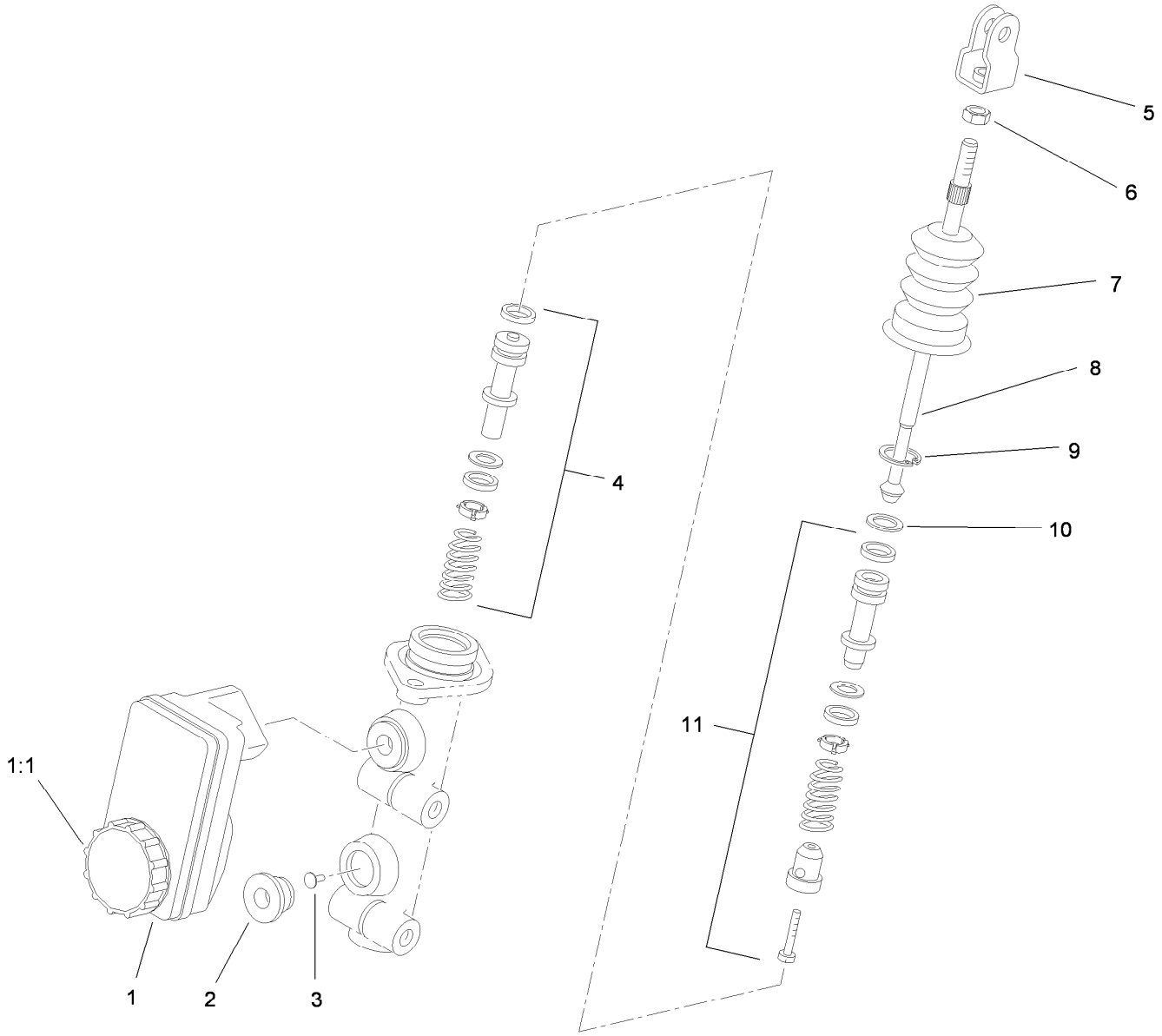

Master Cylinder Assembly No. 104-6782

Ref.	*Part Number*	*Qty.*	*Description*
1	104-6845	1	Reservoir ASM
1:1	92-4112	1	Cap ASM
2	93-8971	2	Seal-Port, Flange
3	92-4103	1	Pin-Stop
4	92-4102	1	Secondary Piston ASM
5	92-4110	1	Clevis
6	21-0360	1	Nut-Hex
7	94-5209	1	Cover-Dust
8	94-5210	1	Rod-Push
9	92-4109	1	Ring-Snap
10	92-4108	1	Retainer-Washer
11	92-4101	1	Primary Piston ASM

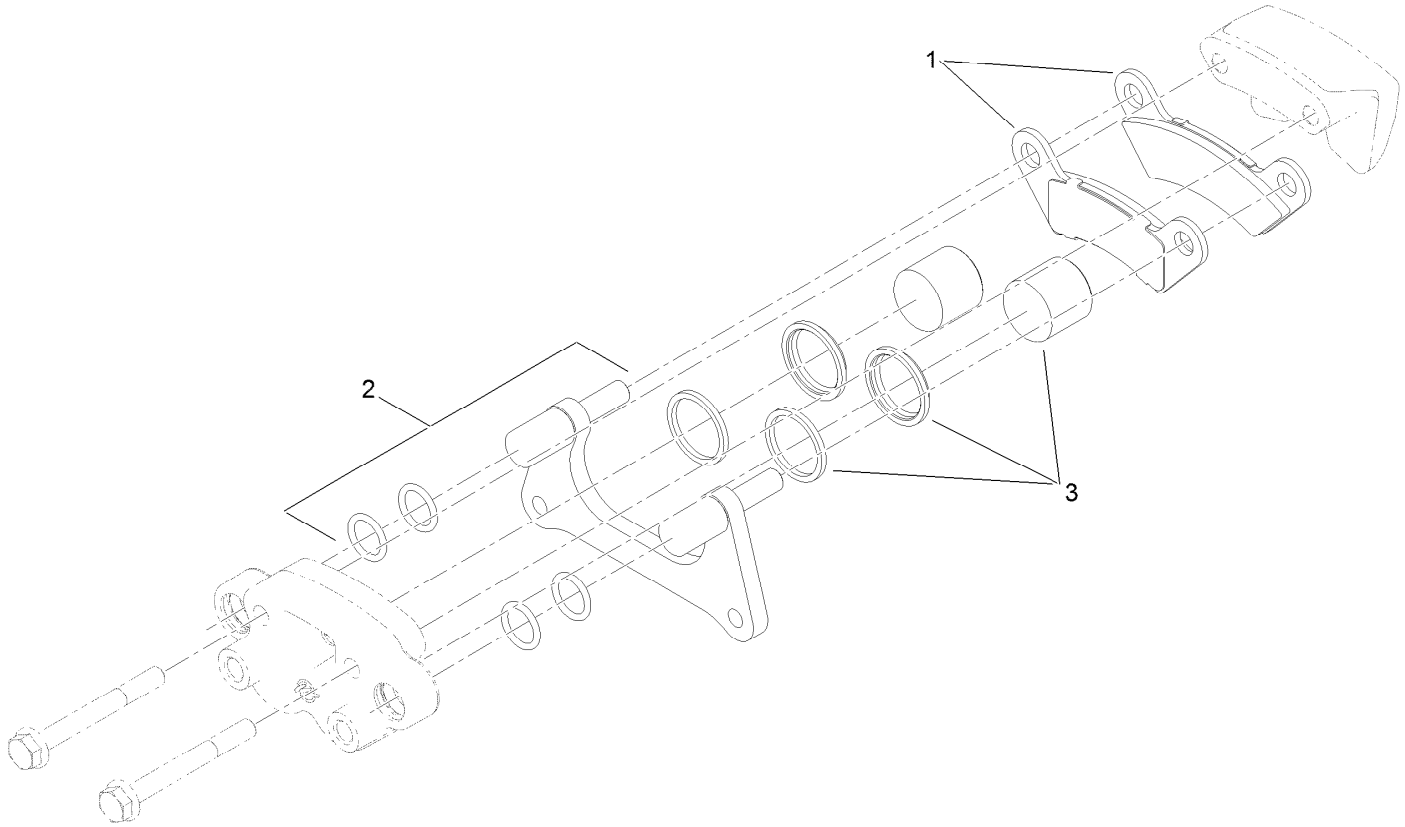

Brake Caliper Assembly No. 127-7424

Ref.	*Part Number*	*Qty.*	*Description*
1	119-9510	1	*obs* Pads-Brake
2	119-9511	1	Bracket Kit
3	133-0614	1	Piston Kit

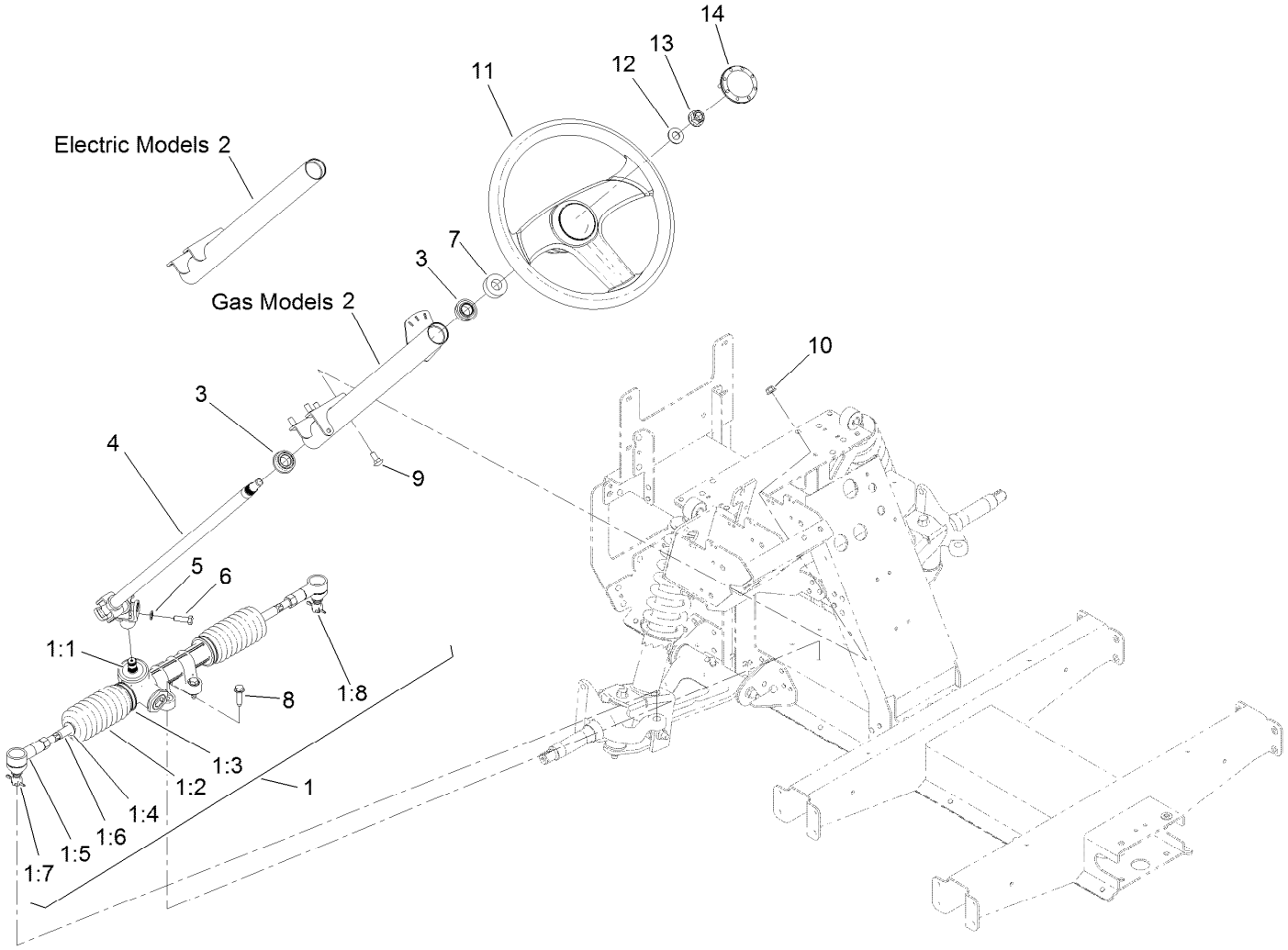

Steering Assembly

Ref.	Part Number	Qty.	Description
1	127-8797	1	Steering Rack ASM
1:1	133-0607	1	*obs* Seal-Shaft
1:2	133-0606	2	Bellows
1:3	133-0605	2	*obs* Clamp-Bellows, Inner
1:4	133-0604	2	*obs* Clamp-Bellows, Outer
1:5	133-0602	2	End-Rod, Track
1:6	133-0601	2	Rod-Tie, Track
1:7	3272-42	2	Pin-Cotter
1:8	137-9891	2	*obs* Nut-Slotted, Ball Joint
2	127-8799-03	1	Steering Column ASM
3	112-3262	2	Bearing

Ref.	Part Number	Qty.	Description
4	127-8804	1	Shaft-Steering
5	3253-4	1	Washer-Lock
6	116-3515	1	Screw-HH, Special
7	21-9260	1	Cover-Dust
8	32144-49	4	Screw-HWHTF
9	3230-1	4	Bolt-CARR
10	104-8300	4	Nut-HF, NI
11	131-0957	1	Wheel-Steering
12	3256-26	1	Washer-Flat
13	99-5107	1	Nut-Lock
14	131-3630	1	Cap-Wheel, Steering

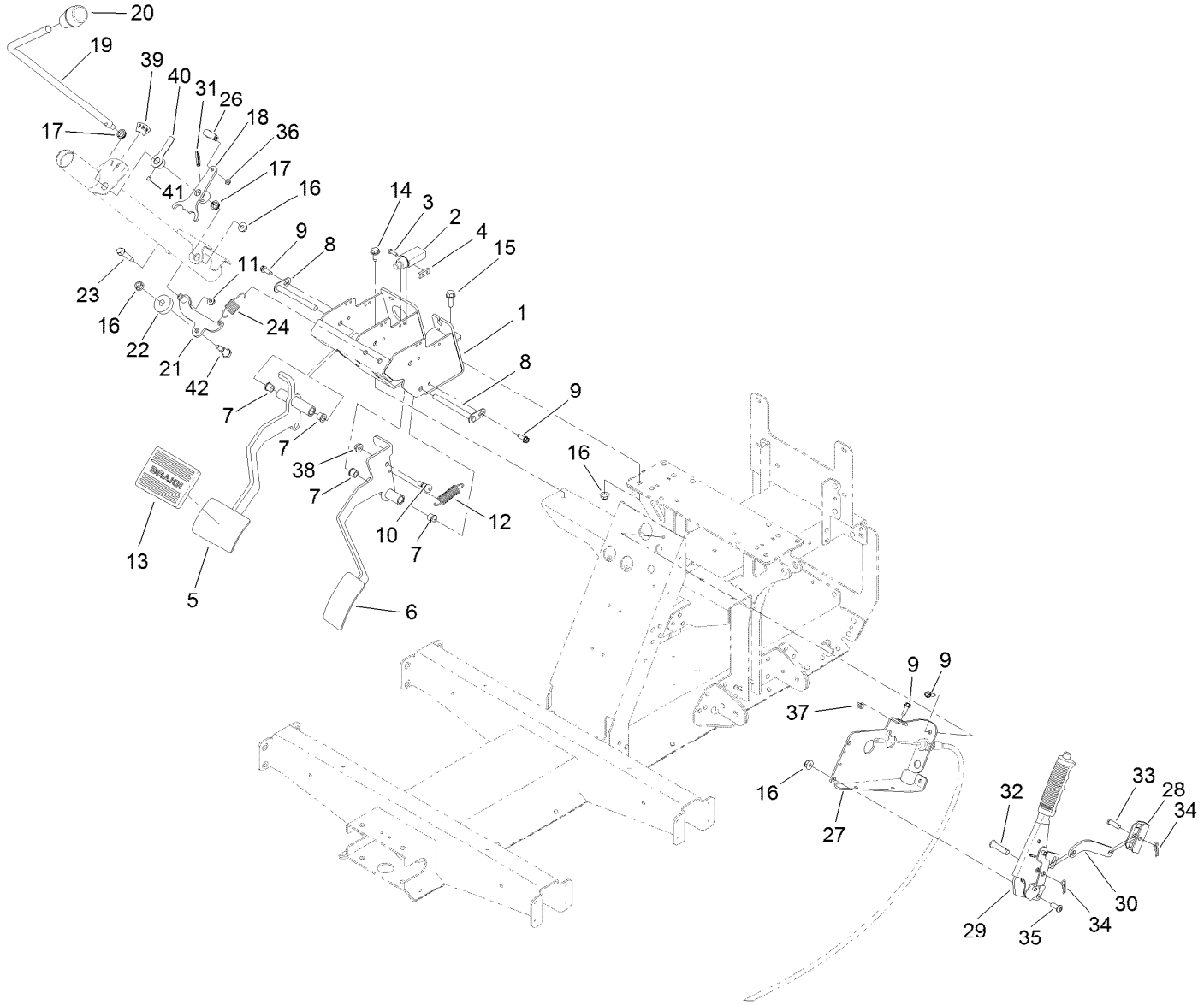

Pedal and Control Assembly

Ref.	Part Number	Qty.	Description
1	127-8817-03	1	Mount-Pedal
2	99-7407	1	Switch
3	3290-134	2	Screw
4	1-633181	1	Plate-Tapped
5	127-8818-03	1	Pedal-Brake
6	127-8819-03	1	Pedal-Accelerator
7	256-116	4	Bushing-Flange
8	131-8459	2	Shaft-Pivot
9	49-2040	5	Screw-HWHTF
10	1-809056	1	Screw-HSH
11	32128-33	1	Nut-HF
12	67-1450	1	Spring-Idler
13	7-3900	1	Pad-Brake
14	32144-70	2	Screw-HWHTF
15	3234-29	1	Screw-HHF
16	104-8300	5	Nut-HF, NI
17	110-3318	2	Bushing-Snap
18	127-8833	1	Arm-Shift
19	127-8830	1	Shaft-Shifter
20	131-8473	1	Knob-Tapered
21	133-7214	1	Arm-Detent

Ref.	Part Number	Qty.	Description
22	133-7212	1	Bushing-Detent, Shift
23	116-6876	1	Screw-Shoulder
24	131-8419	1	Spring-Extension
26	2411-38	1	Joint-Ball
27	127-8834-03	1	Mount-Brake, Park
28	87-3480	1	Bracket-Equalizer, Cable
29	131-8320	1	Lever-Brake, Park
30	127-8836-03	1	Link-Brake, Park
31	32121-9	1	Pin-Roll, Slotted
32	283-10	1	Pin-Clevis
33	1-808280	1	Pin-Clevis
34	1-806003	2	Pin-Cotter
35	3274-55	2	Screw-HSBH
36	3296-27	1	Nut-Lock, NI
37	104-7201	1	Nut-HF
38	32128-20	1	Nut-HF
39	131-8463	1	Decal-Shift
40	131-8462-01	1	Indicator-Shift
41	3245-20	1	Screw-HSH
42	613529	1	Screw-Shoulder

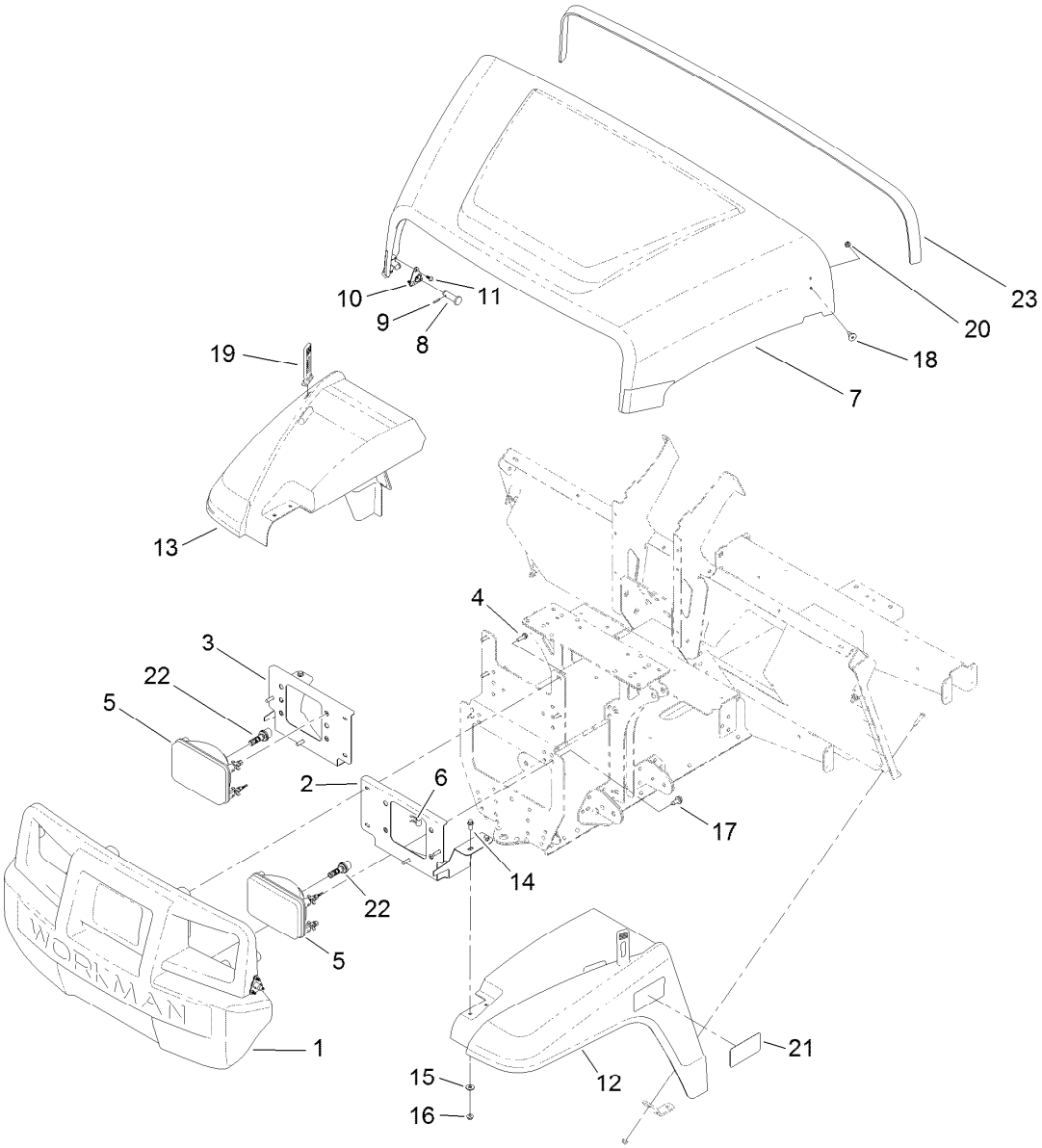

Hood and Fender Assembly

Ref.	Part Number	Qty.	Description
1	132-8530	1	Bumper
2	131-8455-03	1	Bracket-Headlight, LH
3	131-8456-03	1	Bracket-Headlight, RH
4	46-8091	8	Screw-HWH
5	138-9260	2	Headlight ASM
6	115-2408	6	Clip-Speed
7	136-6281	1	Hood
8	117-5094	2	Pin-Clevis
9	32121-50	2	Pin-Spring
10	112-3308	2	Retainer-Pin
11	121-9605	6	Screw-HWH
12	127-7771	1	Fender-Front, LH

Ref.	Part Number	Qty.	Description
13	127-7772	1	Fender-Front, RH
14	3234-33	4	Screw-HHF
15	3256-2	4	Washer-Flat
16	104-7201	4	Nut-HF
17	32144-70	2	Screw-HWHTF
18	125-1122	2	Screw
19	131-8402	2	Strap-Down, Hold
20	3296-56	2	Nut-Lock, NI
21	131-8515	2	Decal-Fender
22	133-0574	2	Bulb-LED
23	133-7210	1	Seal-Trim, Hood

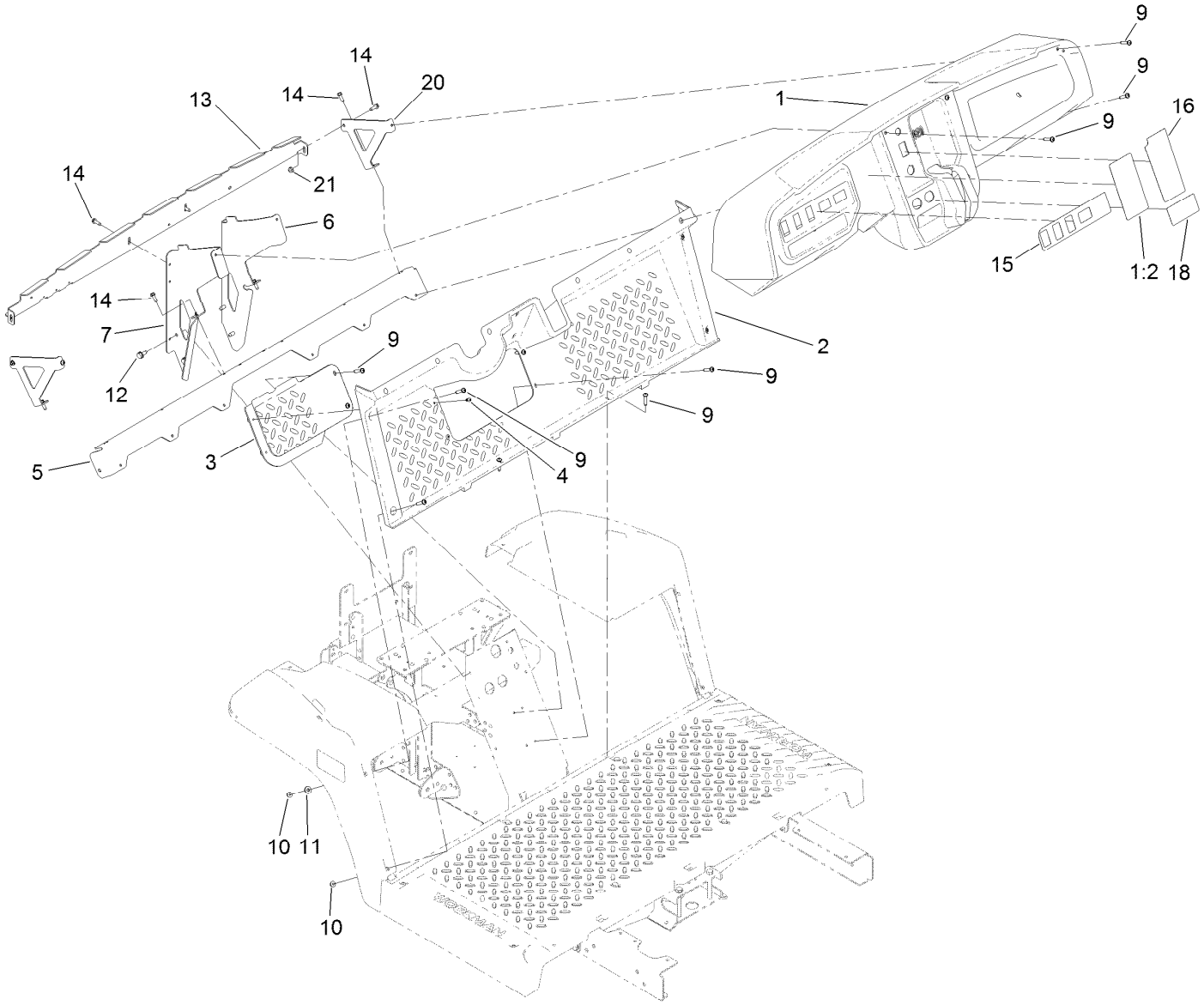

Dash Assembly

Ref.	Part Number	Qty.	Description
1	131-8593	1	Dash
1:2	131-8414	1	Decal-Danger
2	127-7846	1	Footboard
3	127-7847	1	Cover-Footboard
4	107-7461	2	Screw-Plastite
5	127-7831-03	1	Angle
6	131-8336-03	1	Bracket-Dash, RH
7	131-8335-03	1	Bracket-Dash, LH
9	132-6777	20	Screw-TTH
10	104-7201	4	Nut-HF

Ref.	Part Number	Qty.	Description
11	3256-2	2	Washer-Flat
12	32144-70	4	Screw-HWHTF
13	131-8568-03	1	Reinforcement-Dash
14	49-2040	8	Screw-HWHTF
15	138-3524	1	Decal-Dashboard
16	131-8413	1	Decal-Panel, Control
18	131-8493	1	Decal-USB
20	131-8569-03	2	Bracket-Dash, Side
21	104-7201	2	Nut-HF

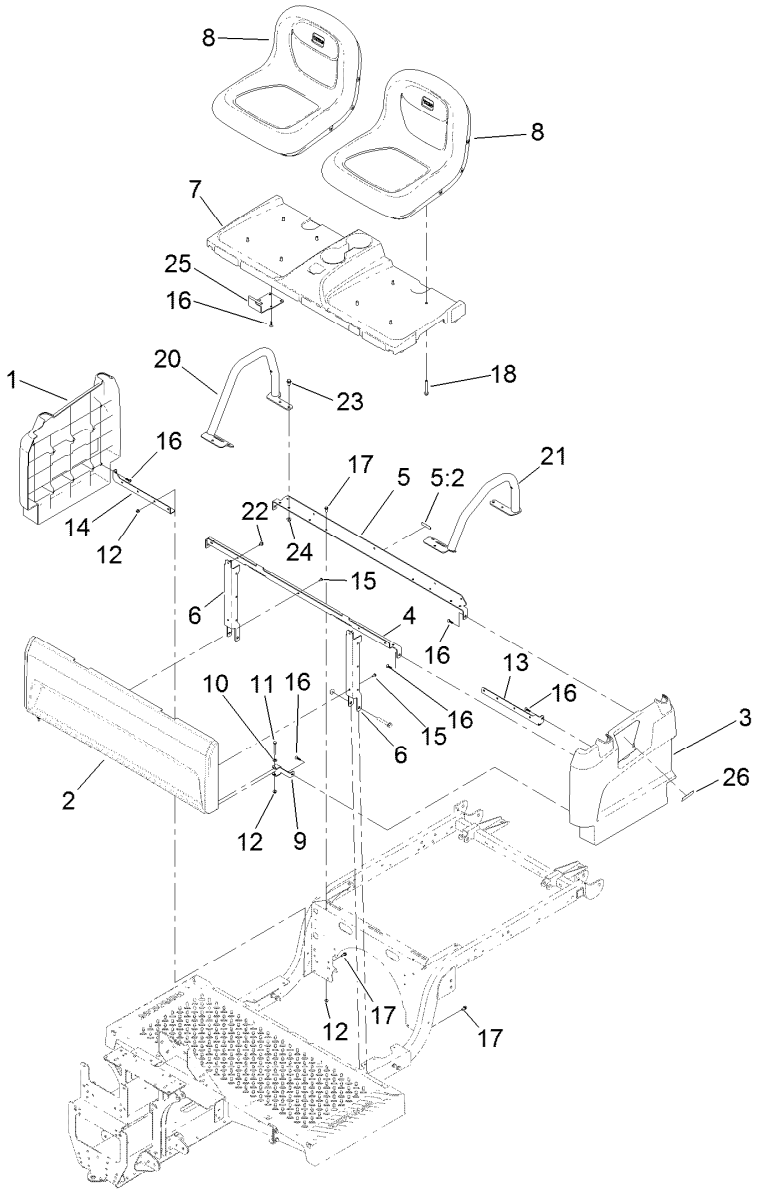

Seatbase Assembly

Ref.	Part Number	Qty.	Description
1	127-7805	1	Side-Base, Seat (RH)
2	133-7188	1	Panel-Base, Seat
3	127-7807	1	Side-Base, Seat (LH)
4	133-7345-03	1	Support-Seat
5	137-6991	1	Seat Support ASM
5:2	120-9570	1	Decal-Warning
6	127-7841-03	2	Channel-Support, Seat
7	127-7839	1	Base-Mount, Seat
8	133-0577	2	Seat ASM
9	127-7844-03	2	Clamp-Plate, Floor
10	3256-22	2	Washer-Flat
11	321-18	2	Screw-HH
12	104-7201	8	Nut-HF

Ref.	Part Number	Qty.	Description
13	127-7842-03	1	Bracket-Support, Side (LH)
14	127-7843-03	1	Bracket-Support, Side (RH)
15	112-6349	5	Screw-HWH
16	120-2349	12	Screw
17	3234-33	6	Screw-HHF
18	33104-060	8	Screw-HHF
20	131-8352-05	1	Restraint-Hip, RH
21	131-8353-05	1	Restraint-Hip, LH
22	46-6810	2	Screw And Washer ASM
23	32144-70	6	Screw-HWHTF
24	104-8300	6	Nut-HF, NI
25	133-7167-03	2	Bracket-Hinge, Seat
26	131-8410	1	Decal-Danger, Fuel

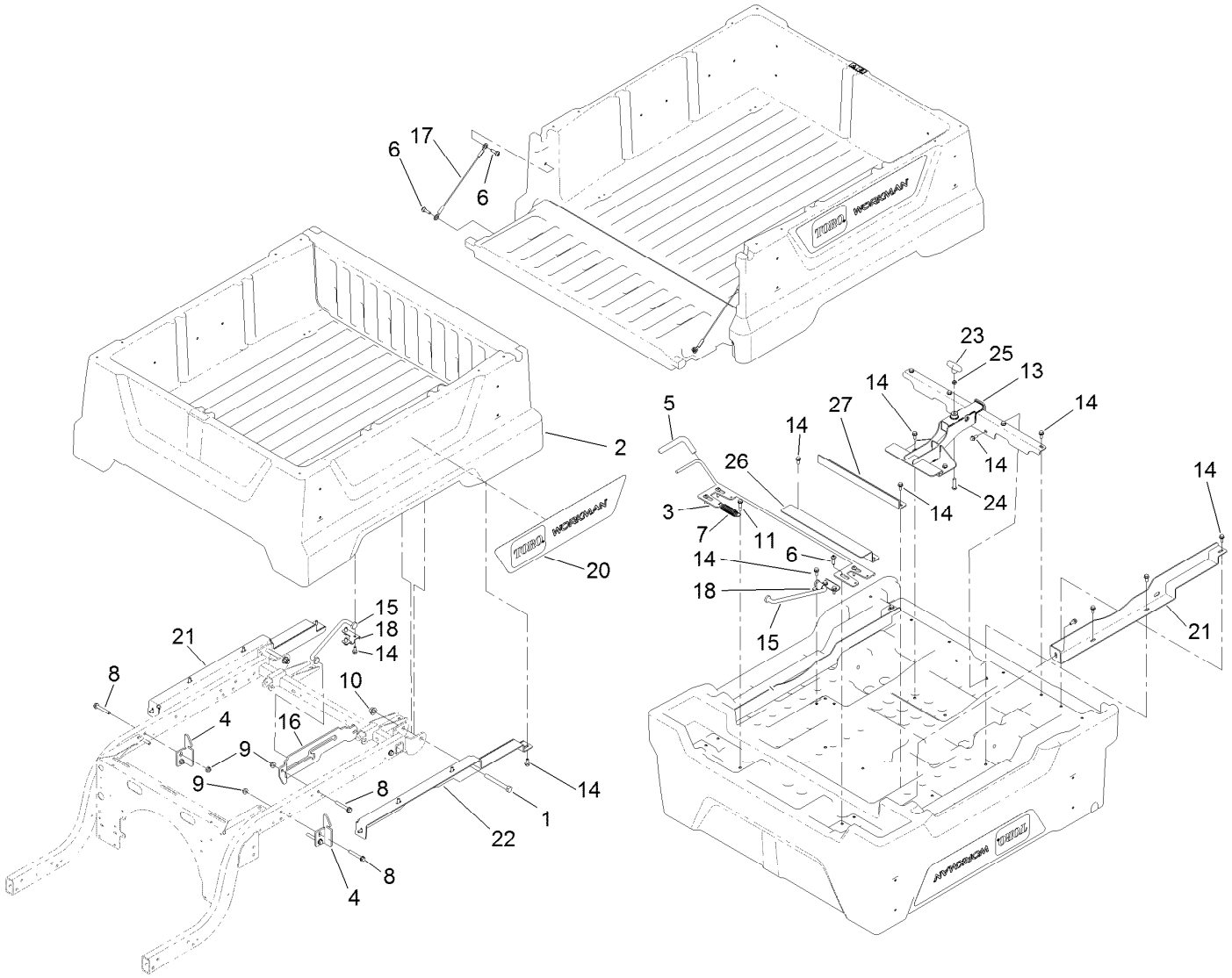

Cargo Bed Assembly

Ref.	Part Number	Qty.	Description
1	325-18	2	Screw-HH
2	131-8592	1	Cargo Bed And Tailgate ASM
3	132-8524	1	Latch
4	127-7428-03	2	Striker-Latch, Bed
5	132-8515	1	Grip-Handle
6	119-2267	8	Screw-Shoulder, BHTF
7	106-5598	1	Spring-Extension
8	3234-39	6	Screw-HHF
9	104-8301	6	Nut-HF, NI
10	99-5107	2	Nut-Lock
11	116-8607	1	Screw-Shoulder
13	132-8523-03	1	Attachment-Quick, Class 1

Ref.	Part Number	Qty.	Description
14	3234-5	25	Screw-HHF
15	132-8517	1	Rod-Prop
16	132-8518	1	Bracket-Rod, Prop
17	121-6343	2	Lanyard-Tailgate
18	132-0839	1	Bracket-U, Prop Rod
20	132-8538	2	Decal-Workman
21	133-3042-03	1	Support-Cargo Bed, RH
22	133-3043-03	1	Support-Cargo Bed, LH
23	133-3056	1	Handle-T
24	95-3857	1	Screw-HSBH
25	3218-3	1	Nut-Jam
26	133-3099-03	1	Brace-Bed, Extended
27	132-8526-03	1	Brace-Middle, Bed

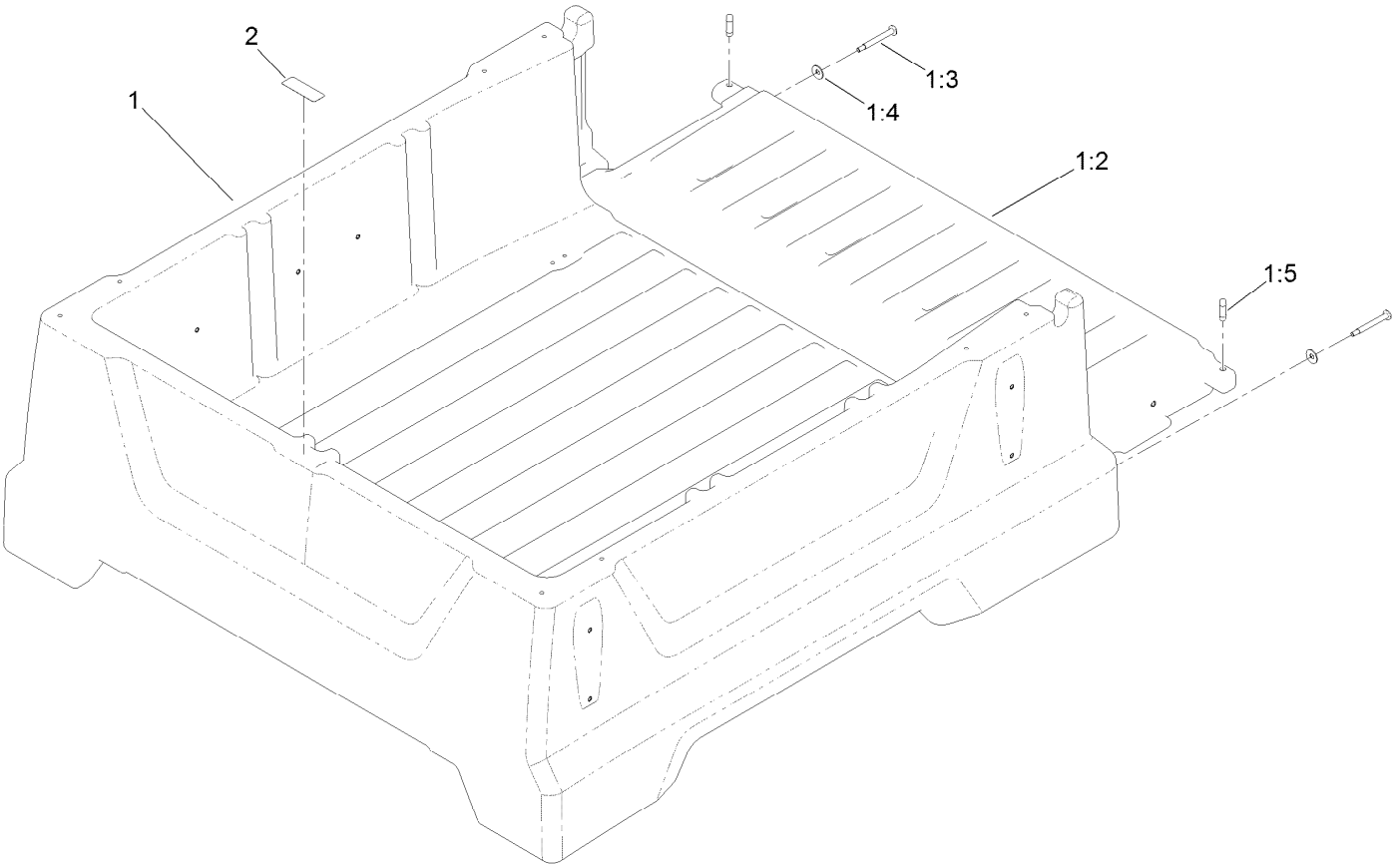

Cargo Bed and Tailgate Assembly No. 131-8592

Ref.	*Part Number*	*Qty.*	*Description*
1		1	Cargo Bed And Tailgate ASM ●
1:2	132-0841	1	Tailgate
1:3	133-7100	2	Screw-Shoulder, Bh (Torx)
1:4	3290-456	2	Washer-Belleville
1:5	133-7146	2	Plug-Tailgate, Anti-Rattle
2	115-7739	1	Decal-No Riders

● Not serviced separately

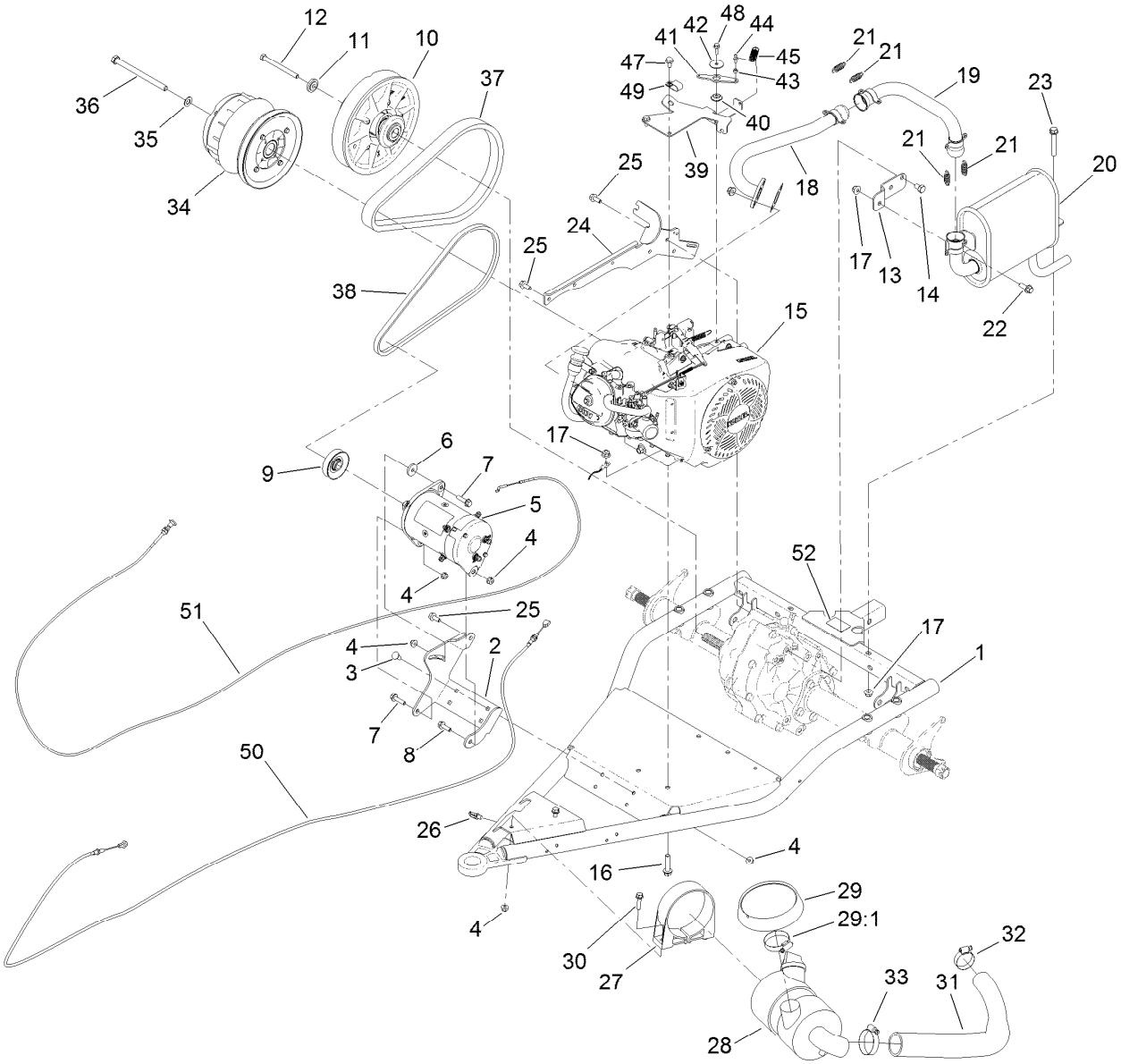

Engine Assembly

Ref.	Part Number	Qty.	Description
1	131-8520-03	1	*obs* Arm-Swing
2	131-8503-03	1	Bracket-Starter/Generator
3	3230-23	4	Bolt-CARR
4	104-8300	9	Nut-HF, NI
5	131-8444	1	Starter/Generator ASM
6	65-8270	1	Washer
7	119-4036	2	Screw-HHF
8	3234-29	1	Screw-HHF
9	121-6277	1	Pulley-Drive
10	119-6011	1	Secondary Clutch ASM
11	104-6563	1	Washer-Stepped
12	119-0723	1	Screw-HH, Lock
13	131-8329	1	Bracket-Muffler
14	70-8470	2	Screw-HH
15	131-8502	1	Engine-Kohler, Ch440
16	3234-19	4	Screw-HHF
17	104-8301	6	Nut-HF, NI
18	131-8510	1	Manifold-Exhaust
19	131-8332	1	Pipe-Intermediate
20	131-8334	1	Muffler
21	104-6478	4	Spring-Extension

Ref.	Part Number	Qty.	Description
22	3234-42	1	Screw-HHF
23	3234-39	1	Screw-HHF
24	131-8501-03	1	Bar-Spanner
25	95-4184	6	Screw-HHF
26	32180-030	1	Clip-Tie
27	95-5806	1	Bracket-Mounting, Air Cleaner
28	99-7120	1	Air Cleaner ASM
29	136-7859	1	Rain Cap Kit
29:1	1-643009	1	Clamp-Hose
30	3234-36	2	Screw-HHF
31	131-8489	1	Hose-Intake, Air
32	2412-111	1	Clamp
33	2412-92	1	Clamp-Hose
34	138-0095	1	Primary Clutch ASM
35	3256-25	1	Washer-Flat
36	131-8521	1	Screw-HH
37	131-8567	1	Belt-Variable
38	94-8803	1	V-Belt, Impeller
39	131-8505	1	Bracket-Throttle
40	131-8524	1	Bushing-Flange

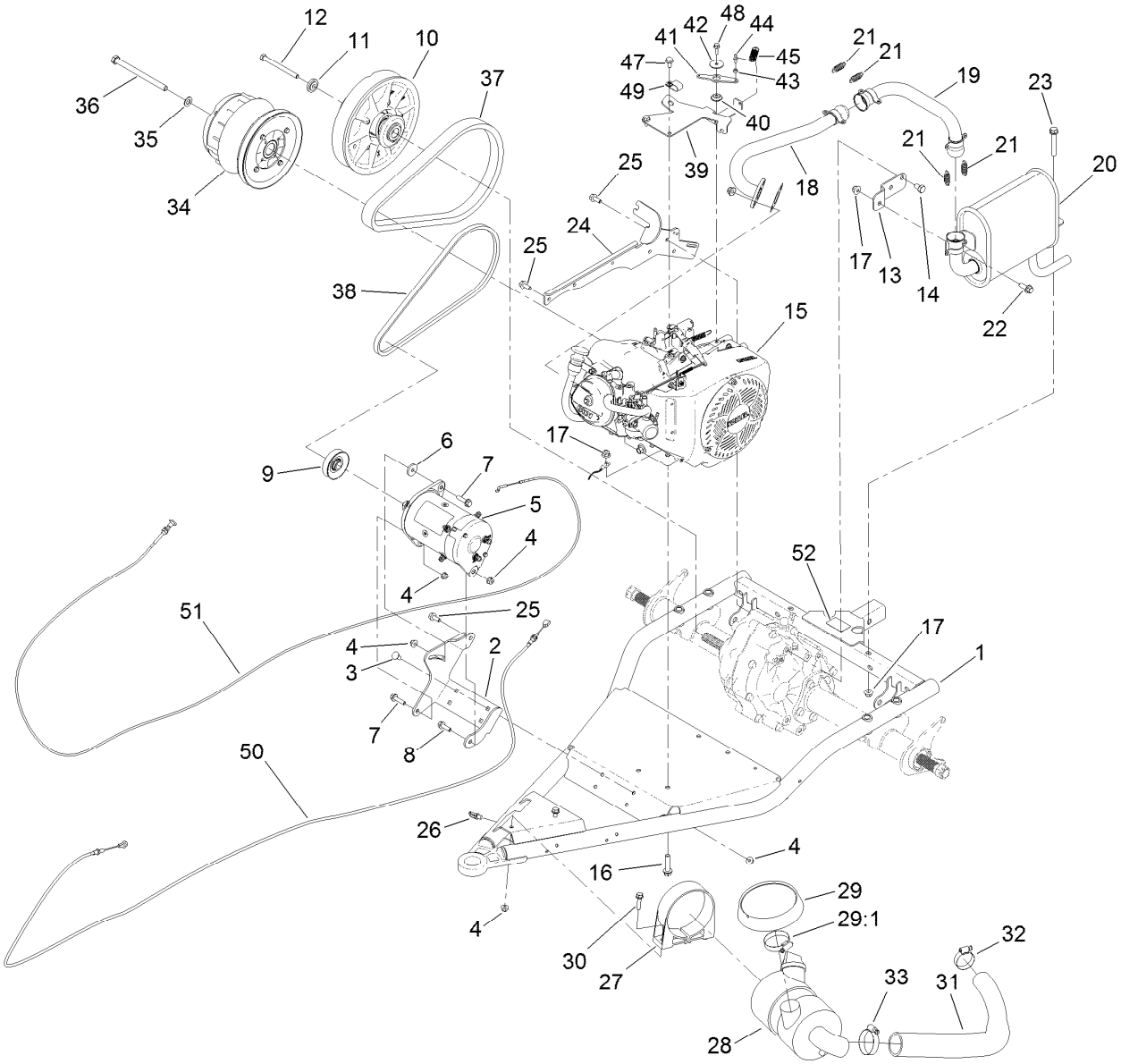

Engine Assembly (continued)

Ref.	Part Number	Qty.	Description
41	131-8504	1	Lever-Throttle
42	3256-55	1	Washer-Flat
43	110-2619	1	Keeper-Spring
44	99-7847	1	Ball-Stud
45	71-5470	1	Spring-Brake
47	33104-016	2	Screw-HHF

Ref.	Part Number	Qty.	Description
48	33103-020	1	Screw-HHF
49	2412-105	1	Clamp-Tube, Double
50	127-8860	1	Cable-Accelerator
51	131-8540	1	Cable-Choke
52	137-9984	1	Decal-Load, Towing

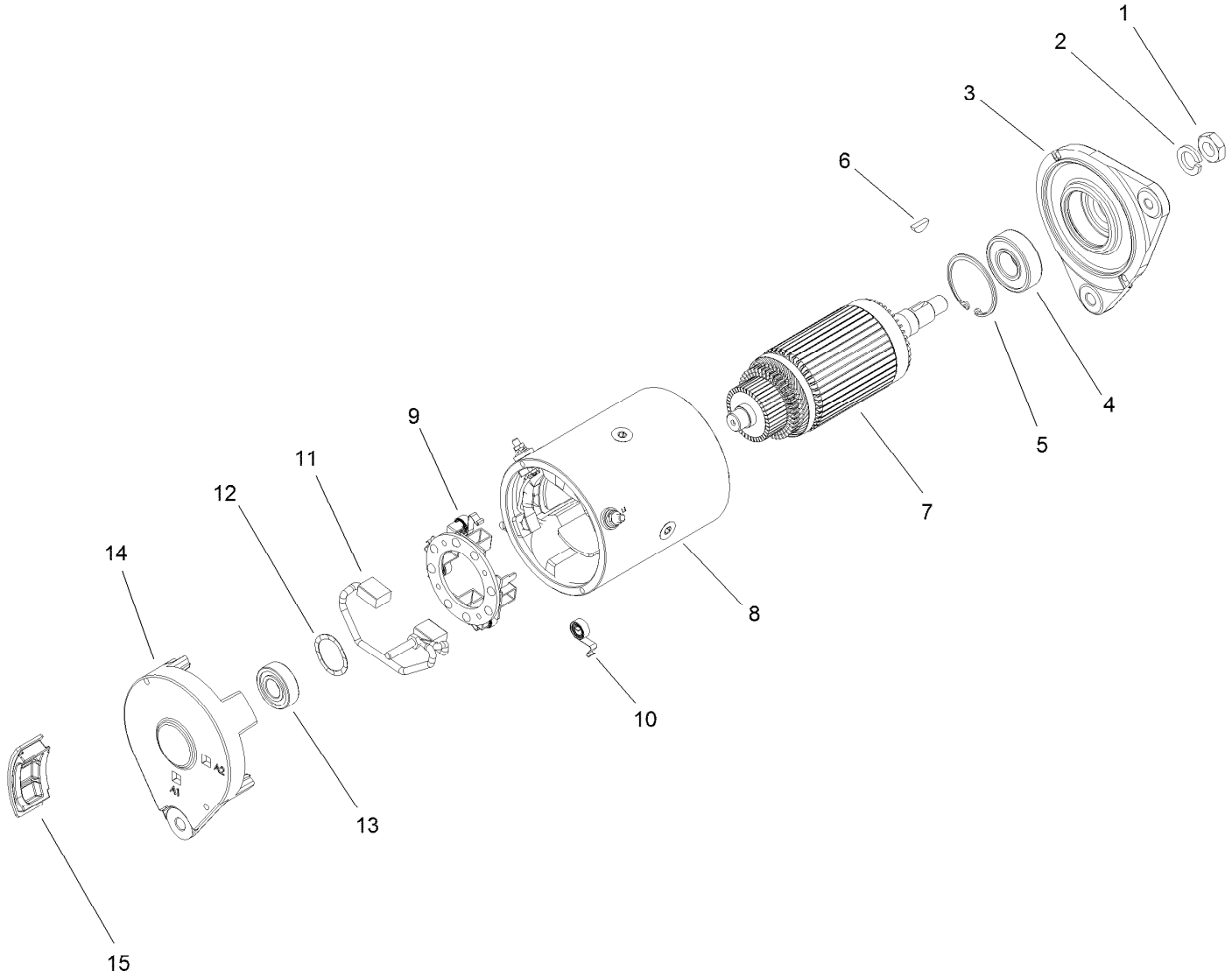

Starter Generator Assembly No. 131-8444

Ref.	*Part Number*	*Qty.*	*Description*
1	119-9651	1	Nut
2	119-9652	1	Washer-Lock
3	133-0599	1	Head-Drive End
4	119-9655	1	Bearing
5	119-9656	1	Ring-Retaining
6	119-9657	1	Key-Woodruff
7	119-9658	1	Armature ASM
8		1	Frame And Field Assembly ●
9	119-9661	1	Brush Box ASM
10	119-9660	4	Spring-Brush
11	119-9659	1	Brush Lead And Terminal Service Kit
12	119-9662	1	Washer-Wave
13	119-9663	1	Bearing
14		1	Head-End, Cummutator ●
15	133-0600	4	Plug-Rubber

● Not serviced separately

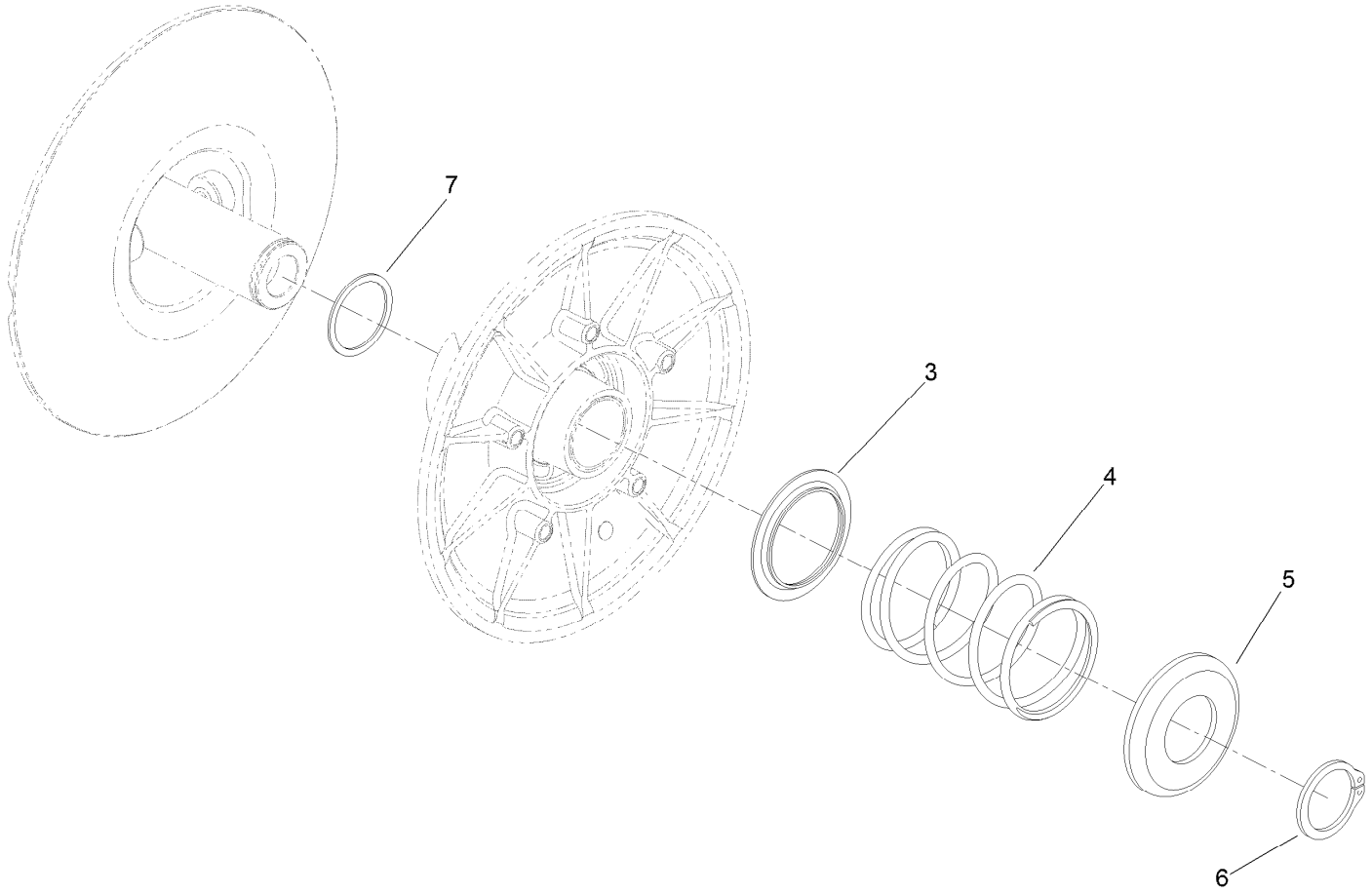

Secondary Clutch Assembly No. 119-6011

Ref.	*Part Number*	*Qty.*	*Description*
3	119-0809	1	Cup-Spring Retainer, Inner
4	119-9360	1	Spring-Compression, Black/Almond
5	119-0810	1	Cup-Spring Retainer, Outer
6	119-0811	1	Ring-Retaining
7	119-6018	1	Shim-Thrust

Engine Assembly No. 131-8502

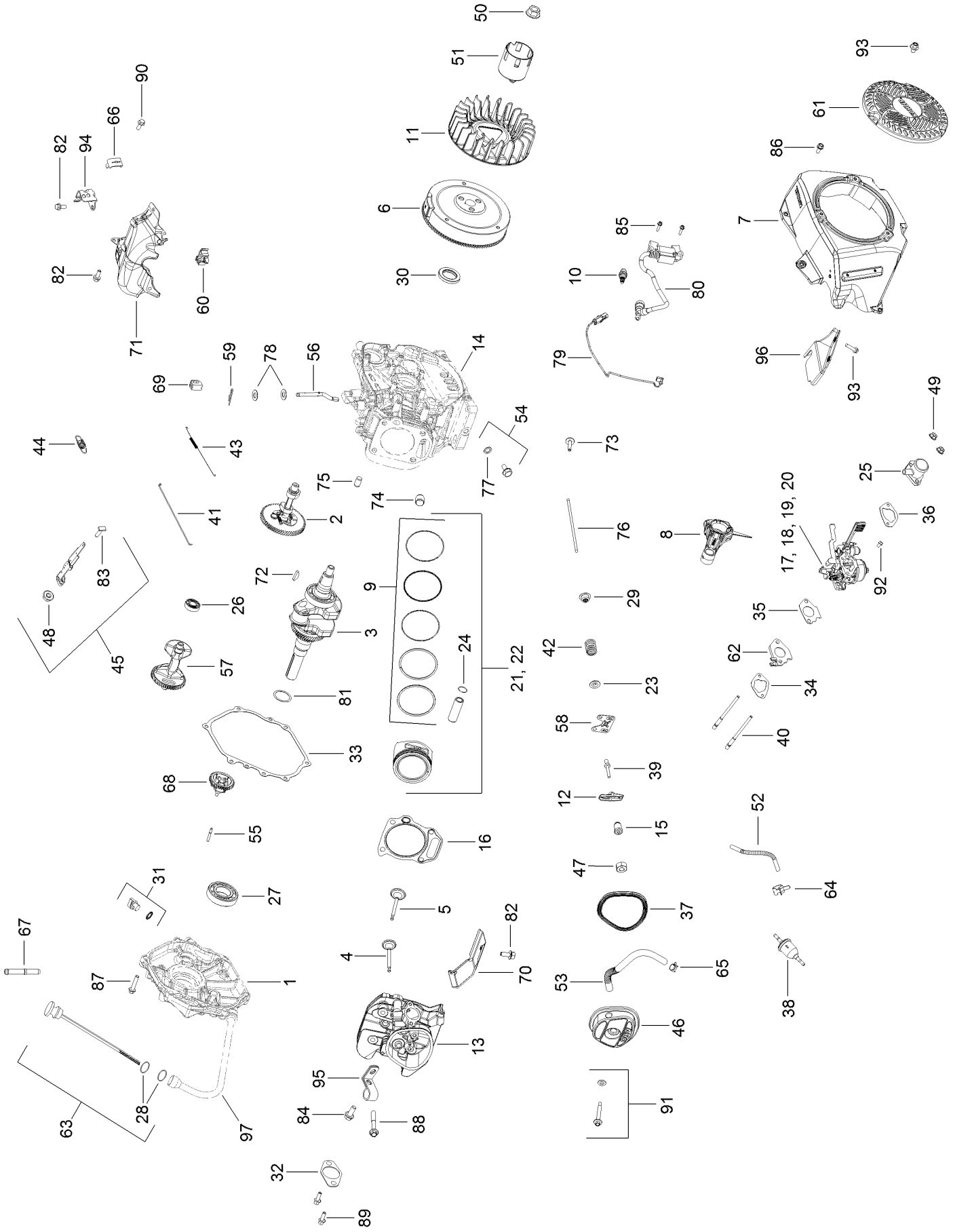

Engine Assembly No. 131-8502 (continued)

Ref.	Part Number	Qty.	Description
1		1	Plate-Closure ■
2	136-4908	1	Camshaft ASM
3	136-4909	1	Crankshaft ASM
4	136-4910	1	Valve-Exhaust
5	136-4911	1	Valve-Intake
6	136-4914	1	Flywheel
7	136-4915	1	Blower Housing Kit
8	136-4928	1	Connecting Rod ASM
9	136-4937	1	Ring Set
10	130-8380	1	Spark Plug
11	136-4949	1	Fan-Flywheel
12	136-4953	2	Arm-Rocker
13	136-4961	1	Cylinder Head Kit
13:1		1	Head-Cylinder ● ■
13:2	136-4929	2	Stud-Intake ●
14		1	Crankcase ■
15	136-4907	2	Pivot-Arm, Rocker
16	136-4975	1	Head Gasket Kit
16:1		1	Gasket-Head ● ■
16:2	136-4924	1	Intake Gasket Kit ●
16:2:1		1	Gasket (Insulator To Head) ● ■
16:2:2	136-4925	1	Gasket (Carb To Insulator) ●
16:2:3	136-4926	1	Gasket-Cleaner, Air ●
16:3	136-4922	1	Gasket-Muffler ●
17	133-7275	1	High Altitude Kit (4000 To 8000 Ft)
17:1		1	Jet-Main (4000 To 8000 Ft) ● ■
17:2	136-4974	1	Carburetor Repair Kit ●
17:2:1	136-4924	1	Intake Gasket Kit ●
17:2:1:1		1	Gasket (Insulator To Head) ● ■
17:2:1:2	136-4925	1	Gasket (Carb To Insulator) ●
17:2:1:3	136-4926	1	Gasket-Cleaner, Air ●
17:2:2		1	Needle/Float ASM ● ■
17:2:3		1	Pin-Hinge ● ■
17:2:4		1	O-Ring (Bowl Screw) ● ■
17:2:5		2	O-Ring (Idle Jet) ● ■
17:2:6		1	O-Ring (Sediment Bowl) ● ■
17:2:7		1	O-Ring ● ■
18	133-7276	1	High Altitude Kit (8000 Ft Plus)
18:1		1	Jet-Main (8000 Ft Plus) ● ■
18:2	136-4974	1	Carburetor Repair Kit ●
18:2:1	136-4924	1	Intake Gasket Kit ●
18:2:1:1		1	Gasket (Insulator To Head) ● ■
18:2:1:2	136-4925	1	Gasket (Carb To Insulator) ●
18:2:1:3	136-4926	1	Gasket-Cleaner, Air ●
18:2:2		1	Needle/Float ASM ● ■
18:2:3		1	Pin-Hinge ● ■
18:2:4		1	O-Ring (Bowl Screw) ● ■
18:2:5		2	O-Ring (Idle Jet) ● ■
18:2:6		1	O-Ring (Sediment Bowl) ● ■
18:2:7		1	O-Ring ● ■
19	136-4974	1	Carburetor Repair Kit
19:1	136-4924	1	Intake Gasket Kit ●
19:1:1		1	Gasket (Insulator To Head) ● ■
19:1:2	136-4925	1	Gasket (Carb To Insulator) ●
19:1:3	136-4926	1	Gasket-Cleaner, Air ●
19:2		1	Needle/Float ASM ● ■
19:3		1	Pin-Hinge ● ■
19:4		1	O-Ring (Bowl Screw) ● ■
19:5		2	O-Ring (Idle Jet) ● ■
19:6		1	O-Ring (Sediment Bowl) ● ■
19:7		1	O-Ring ● ■
20	133-7277	1	Carburetor-Complete
20:1		1	Carburetor Asm ● ■
20:2	136-4924	1	Intake Gasket Kit ●
20:2:1		1	Gasket (Insulator To Head) ● ■
20:2:2	136-4925	1	Gasket (Carb To Insulator) ●
20:2:3	136-4926	1	Gasket-Cleaner, Air ●
21	136-4977	1	Piston W/Ring Set (STD)
21:1		1	Piston (STD) ● ■
21:2	136-4937	1	Ring Set ●
21:3	136-4913	2	Retainer-Piston ●
21:4		1	Wrist Pin ● ■
22	136-4978	1	Piston Kit (0.25 Os)
22:1		1	Piston (0.25 Os) ● ■
22:2		1	Ring Set (0.25 Os) ● ■
22:3	136-4913	2	Retainer-Piston ●
22:4		1	Pin-Wrist ● ■
23	136-4912	2	Retainer-Spring, Valve
24	136-4913	1	Retainer-Piston
25	136-4916	1	Adapter-Inlet, Air
26	136-4917	2	Bearing-Shaft, Balance
27	136-4918	2	Bearing-Crankshaft
28	136-4947	2	O-Ring (Dipstick Cap)
29	136-4919	2	Seal-Stem, Valve
30	136-4920	2	Seal-Crankshaft
31	136-4952	1	Oil Fill Cap ASM
31:1		1	Oil Fill Cap ● ■
31:2		1	Gasket ● ■
32	136-4922	1	Gasket-Muffler
33	136-4923	1	Gasket-Plate, Closure
34	136-4924	1	Intake Gasket Kit
34:1		1	Gasket (Insulator To Head) ● ■
34:2	136-4925	1	Gasket (Carb To Insulator) ●
34:3	136-4926	1	Gasket-Cleaner, Air ●
35	136-4925	1	Gasket (Carb To Insulator)
36	136-4926	1	Gasket-Cleaner, Air
37	136-4927	1	Gasket-Cover, Valve
38	131-8588	1	Filter-Fuel (75 Micron Gravty Feed)
39	136-4900	2	Stud-Arm, Rocker
40	136-4929	2	Stud-Intake
41	136-4930	1	Linkage-Governor
42	136-4931	2	Spring-Valve
43	136-4932	1	Spring-Linkage
44	136-4933	1	Spring-Governor
45	136-4934	1	Governor Lever Kit
45:1		1	Lever-Governor ● ■

● Not illustrated

■ Not serviced separately

Engine Assembly No. 131-8502 (continued)

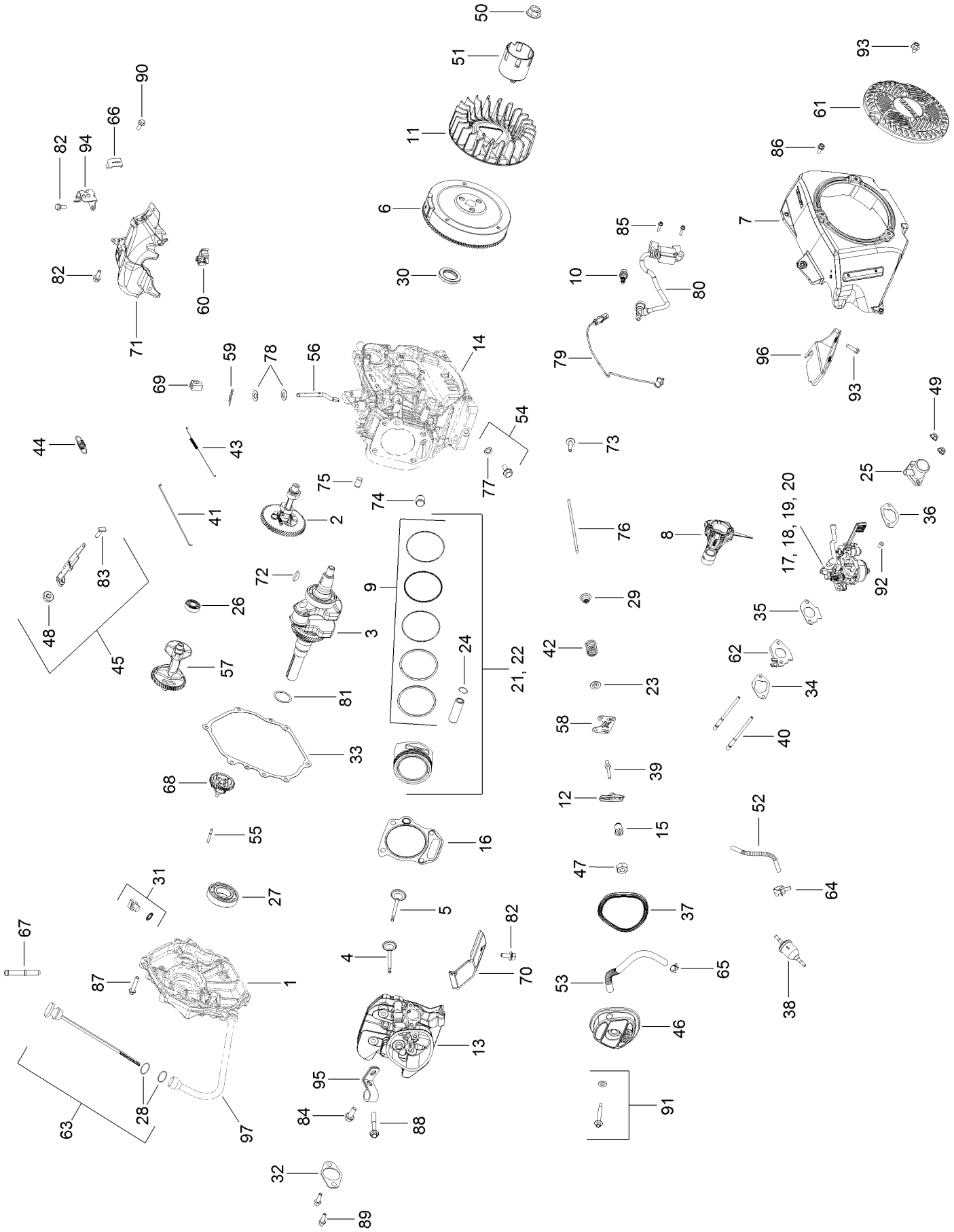

Engine Assembly No. 131-8502 (continued)

Ref.	Part Number	Qty.	Description
47	136-4901	2	Nut-HJ
48	136-4902	1	Nut-HF
49	136-4903	2	Nut-HF, Lock
50	136-4936	1	Nut-Flywheel
51	136-4938	1	Cup-Drive, Starter
52	136-4939	1	Hose-Fuel
53	136-4962	1	Hose-Breather
54	136-4942	2	Drain Plug Kit
54:1		1	Plug-Drain ●■
54:2	136-4967	1	Washer-Plug, Drain ●
55	136-4943	1	Shaft-Gear, Governor
56	136-4944	1	Shaft-Cross, Governor
57	136-4945	1	Shaft-Balance
58	136-4946	1	Plate-Guide, Pushrod
59	136-4904	1	Clip-Shaft, Governor
60	136-4948	1	Clip-Harness, Wire
61	136-4950	1	Screen-Housing, Blower
62	136-4951	1	Insulator Kit
62:1		1	Insulator ●■
62:2	136-4924	1	Intake Gasket Kit ●
62:2:1		1	Gasket (Insulator To Head) ●■
62:2:2	136-4925	1	Gasket (Carb To Insulator) ●
62:2:3	136-4926	1	Gasket-Cleaner, Air ●
63	136-4921	1	Dipstick ASM
63:1		1	Dipstick ●■
63:2		2	O-Ring (Dipstick Cap) ●■
64	136-4905	2	Clamp-Line, Fuel
65	136-4990	1	Clamp-Hose
66	136-4954	1	Clamp-Cable
67	136-4955	1	Fitting-Pump, Pulse
68	136-4956	1	Governor ASM
69	136-4957	1	Grommet-Crankcase
70	136-4959	1	Shield-Head, Cylinder
71	136-4960	1	Shield-Heat, Upper
72	136-4906	1	Key-Flywheel
73	136-4963	2	Lifter-Valve
74	136-4964	2	Pin-Dowel, Cylinder Head
75	136-4965	2	Pin-Dowel
76	136-4966	2	Rod-Push
77	136-4967	2	Washer-Plug, Drain
78	136-4968	2	Washer-Flat
79	136-4969	1	Lead (Ground To Kill)
80	136-4970	1	Module-Ignition
81	136-4971	1	Shim Kit
82	136-4979	5	Screw-HF
83	136-4980	1	Screw-Rect Head
84	136-4991	1	Screw-HF
85	136-4981	2	Screw
86	136-4982	5	Screw
87	136-4983	7	Screw-Plate, Closure
88	136-4984	4	Screw-CYL HD, HF
89	136-4985	2	Screw
90	136-4986	1	Screw-Hex, Phillips
91	136-4988	1	Screw (Valve Cover Seal ASM)
91:1		1	Screw-Cover, Valve ●■
91:2		1	Gasket-Screw, Valve Cover ●■
92	136-4989	1	Screw-Drain, Bowl
93	136-4987	5	Screw-HF
94	136-4940	1	Remote Choke Bracket ASM
95	136-4941	1	Bracket-Tube, Dipstick
96	136-4958	1	Flywheel Finger Guard ASM
97		1	Tube-Dipstick ■
99	94-9695	1	Filter-Fuel ●
99	138-6521	1	Sensor-Oxygen ●
99	136-6347	1	Pump-Fuel, EFI ●
99	131-8526	1	Pump-Fuel ●

● Not illustrated

■ Not serviced separately

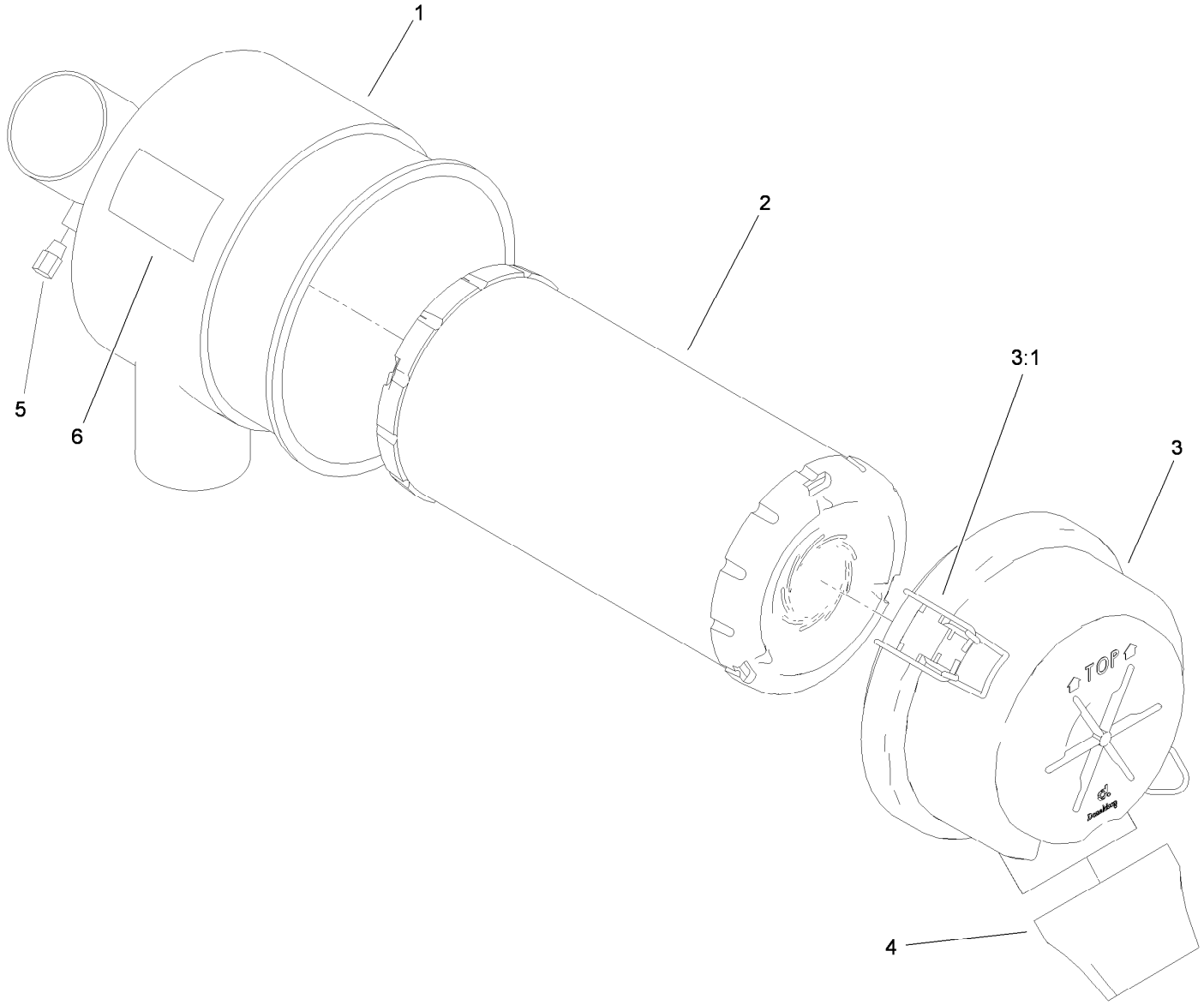

Air Cleaner Assembly No. 99-7120

Ref.	Part Number	Qty.	Description
1		1	Body ●
2	108-3811	1	Filter-Air
3	94-3652	1	Cover ASM
3:1	1-643283	2	Latch-Cleaner, Air
4	87-9400	1	Valve-Vacuator
5		1	Plug ●
6		1	Marking ●

● Not serviced separately

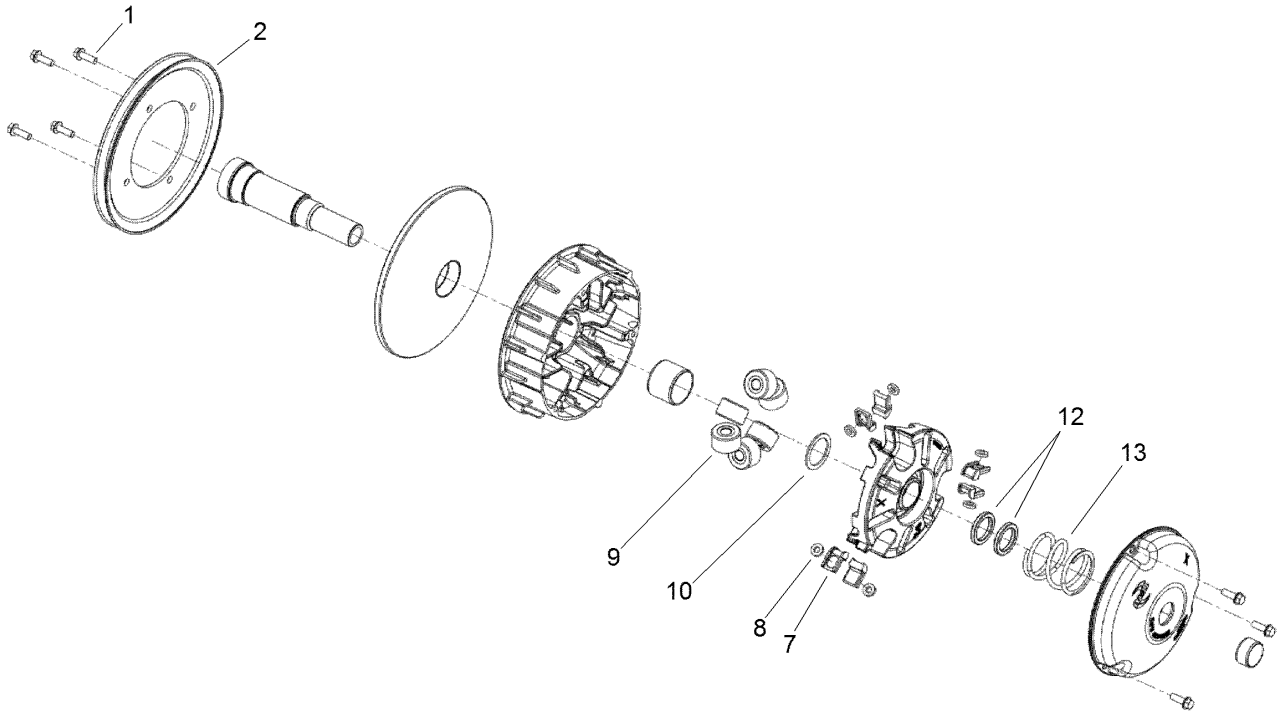

Primary Clutch Assembly No. 138-0095

Ref.	*Part Number*	*Qty.*	*Description*
1	49-2040	7	Screw-HWHTF
2	119-0813	1	Pulley-Primary
7	127-8689	6	Button-Primary, Torque
8	127-8690	6	Plug-Button, Torque
9	119-0804	6	Weight-Roller
10	119-0812	1	Shim-Spider
12	119-0807	2	Shim-Limiter
13	119-9532	1	Spring-Red/White

Rear Wheel and Transaxle Assembly

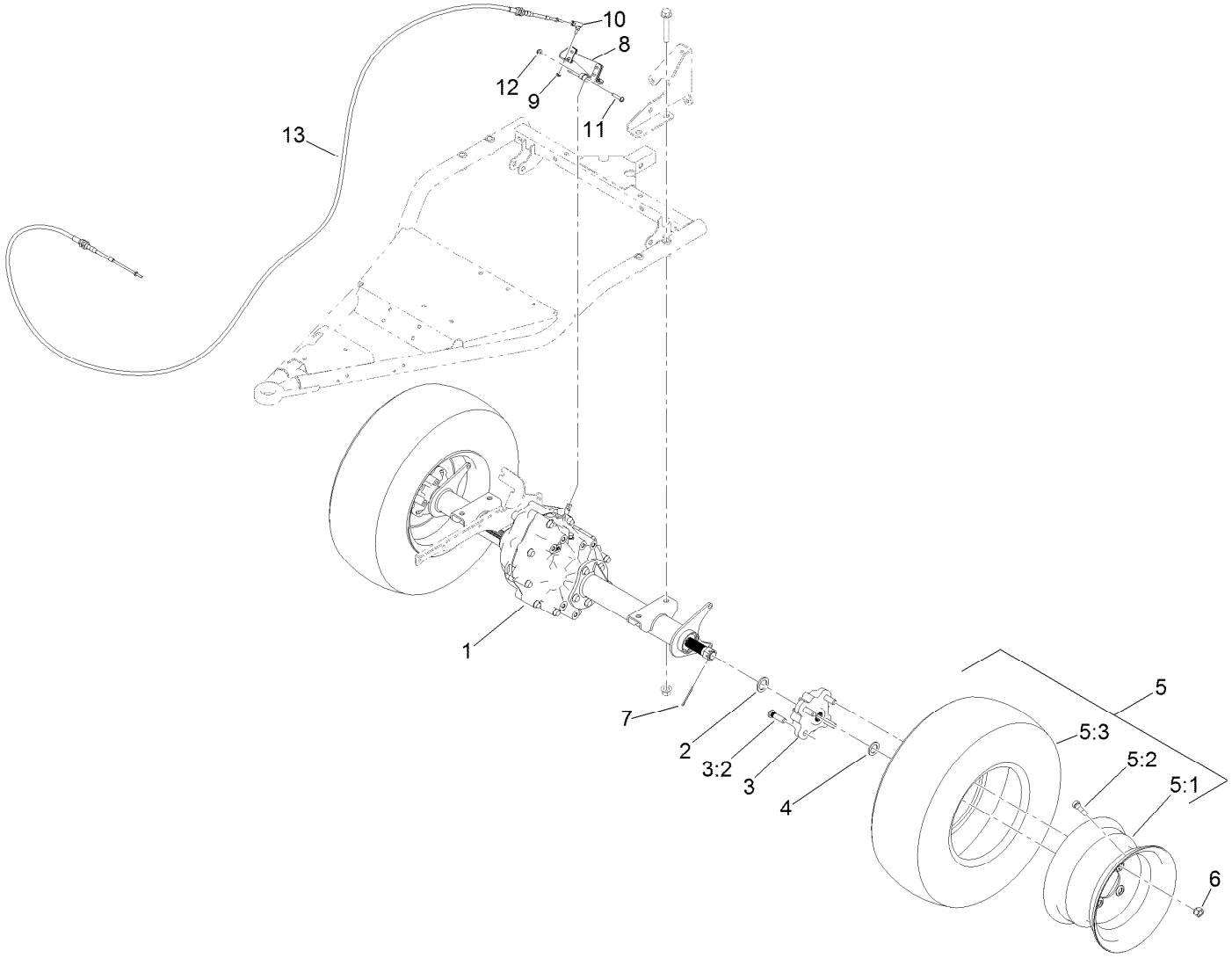

Rear Wheel and Transaxle Assembly (continued)

Ref.	Part Number	Qty.	Description
1	131-3486	1	Transaxle
2	131-8570	2	Spacer-Hardened
3	127-8848	2	Rear Hub ASM
3:2	10-6830	4	Stud-Type, Drive
4	3-7898	2	Washer-Thrust
5	131-8319	2	Tire/Wheel ASM
5:1	131-8317	1	Wheel
5:2	232-27	1	Stem-Valve
5:3	131-8318	1	Tire

Ref.	Part Number	Qty.	Description
6	242-50	8	Nut-Lug
7	1-806800	2	Pin-Cotter
8	133-7260-03	1	Arm-Shift
9	3296-27	1	Nut-Lock, NI
10	2411-38	1	Joint-Ball
11	132-6777	1	Screw-TTH
12	104-7201	1	Nut-HF
13	127-8897	1	Cable-Shift

Transaxle Assembly No. 131-3486

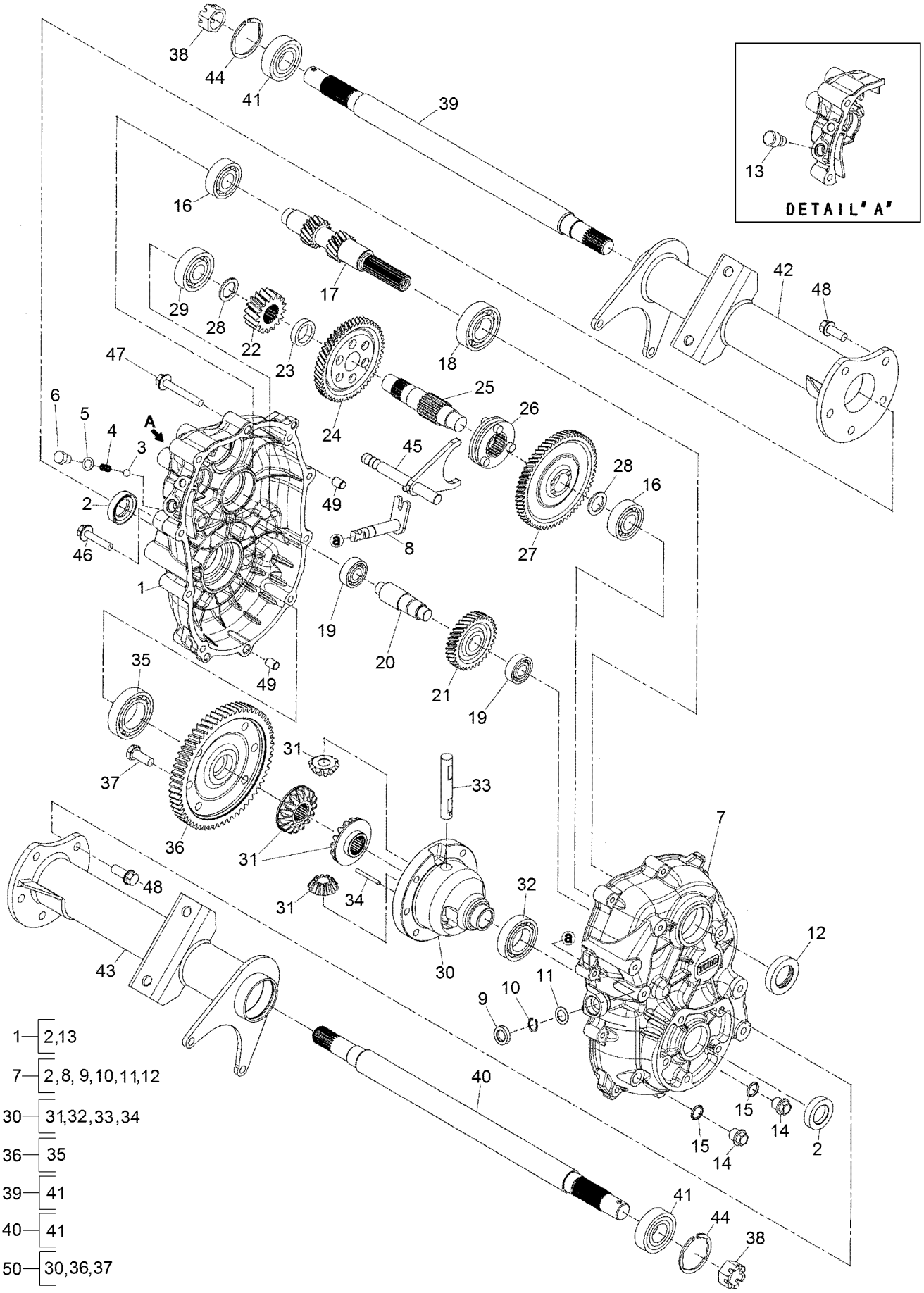

Transaxle Assembly No. 131-3486 (continued)

Ref.	Part Number	Qty.	Description
1	133-2400	1	Case-LH
2	133-2401	2	Seal-Oil
3	104-1660	1	Ball-Steel
4	104-1661	1	Spring
5	104-1662	1	Gasket
6	104-1663	1	Bolt
7	133-2402	1	Case-RH
8	133-2403	1	Shaft-Select
9	133-2446	1	Seal-Oil
10	133-2404	1	Ring-Snap
11	133-2405	1	Spacer
12	104-1607	1	Seal-Oil
13	133-2406	1	Breather-Air
14	133-2407	2	Plug-Drain, Oil
15	133-2408	2	Gasket
16	133-2409	2	Bearing-Ball
17	133-2410	1	Shaft-Input
18	133-2411	1	Bearing-Ball
19	133-2412	2	Bearing-Ball
20	133-2413	1	Shaft-Counter
21	133-2414	1	Gear
22	133-2415	1	Gear
23	133-2416	1	Collar
24	133-2417	1	Gear
25	133-2418	1	Shaft-Center

Ref.	Part Number	Qty.	Description
26	133-2419	1	Clutch-Pin
27	133-2420	1	Gear
28	133-2421	2	Spacer
29	133-2422	1	Bearing-Ball
30	133-2423	1	Case-Differentail
31	133-2424	1	Set-Gear, Differential
32	133-2425	1	Bearing-Ball
33	104-1644	1	Shaft-Differential
34	104-1645	1	Pin
35	133-2426	1	Bearing-Ball
36	133-2427	1	Gear
37	104-1649	6	Bolt
38	133-2428	2	Nut-Castle
39	133-2429	1	Shaft-Axle, LH
40	133-2430	1	Shaft-Axle, RH
41	133-2431	2	Bearing-Ball
42	133-2432	1	Case-Axle, LH
43	133-2433	1	Case-Axle, RH
44	133-2434	2	Ring-Snap
45	133-2435	1	Shaft-Shift
46	133-2436	1	Bolt-Flange
47	133-2437	9	Bolt-Flange
48	133-2438	10	Bolt-Flange
49	133-2439	2	Pipe-Knock
50	133-2440	1	Differential ASM

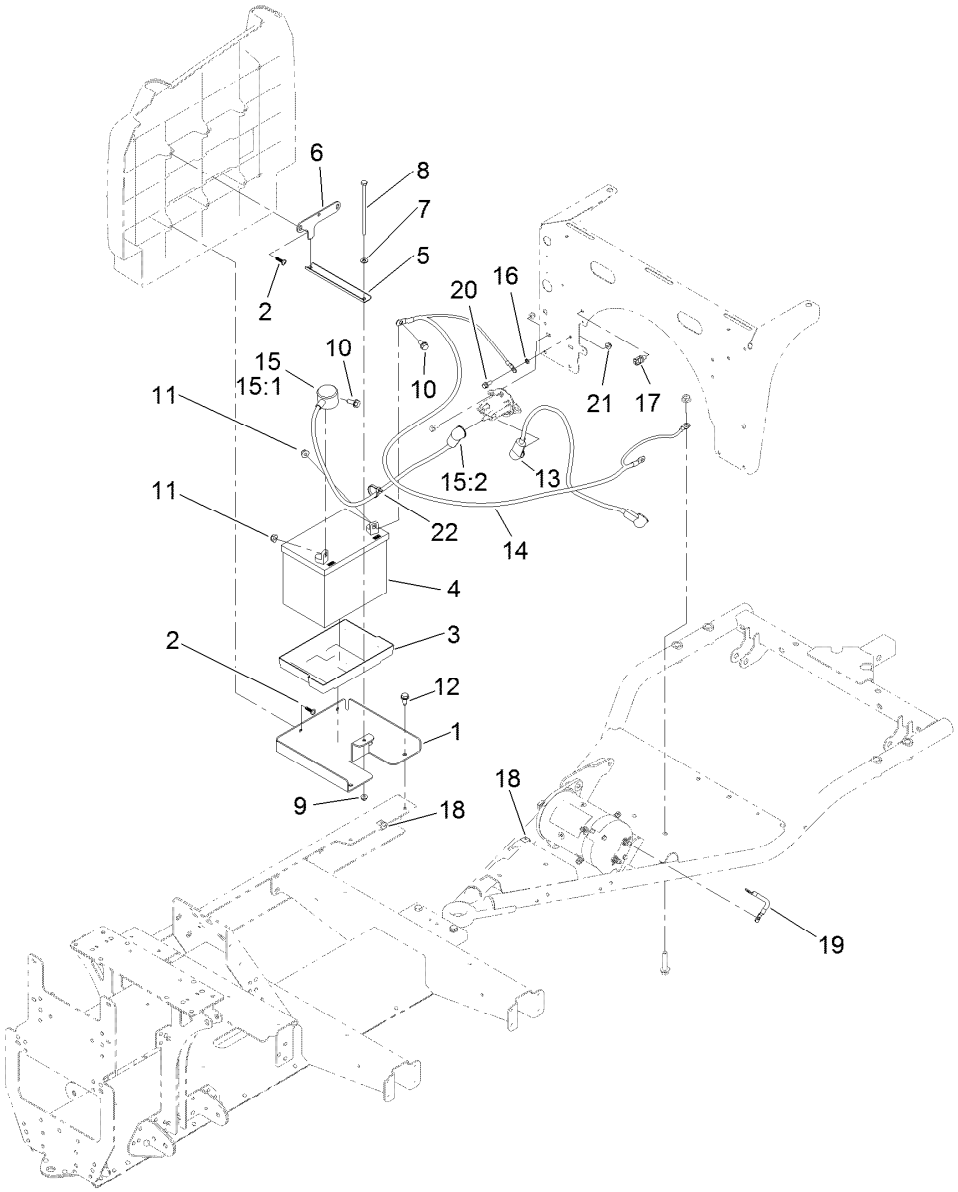

Battery and Cable Assembly

Ref.	Part Number	Qty.	Description
1	127-7810-03	1	Base-Battery
2	120-2349	4	Screw
3	106948	1	Tray-Battery
4	104-8162	1	Battery
5	127-7816-03	1	Channel-Clamp, Battery
6	127-7814-03	1	Plate-Clamp, Battery
7	3256-22	1	Washer-Flat
8	321-47	1	Screw-HH
9	104-7201	1	Nut-HF
10	3234-5	2	Screw-HHF
11	104-8300	2	Nut-HF, NI
12	32144-70	2	Screw-HWHTF
13	122-0639	1	Cable-Battery, Positive
14	122-0638	1	Cable-Battery, Negative

Ref.	Part Number	Qty.	Description
15	109-7621	1	Positive Battery Cable ASM
15:1	1-543393	1	Insulator-Solenoid
15:2	109-2407	1	Insulator-Battery
16	3255-7	1	Washer-Lock/EXT
17	32180-030	1	Clip-Tie
18	32180-082	3	Clip-Edge W/Tie, Perpendicular
19	122-1176	1	Cable-Battery, Negative
20	3234-33	1	Screw-HHF
21	104-7201	1	Nut-HF
22	3290-378	1	Tie-Cable
99	107-0392	1	Protection-Terminal, Aerosol ●

● Not illustrated

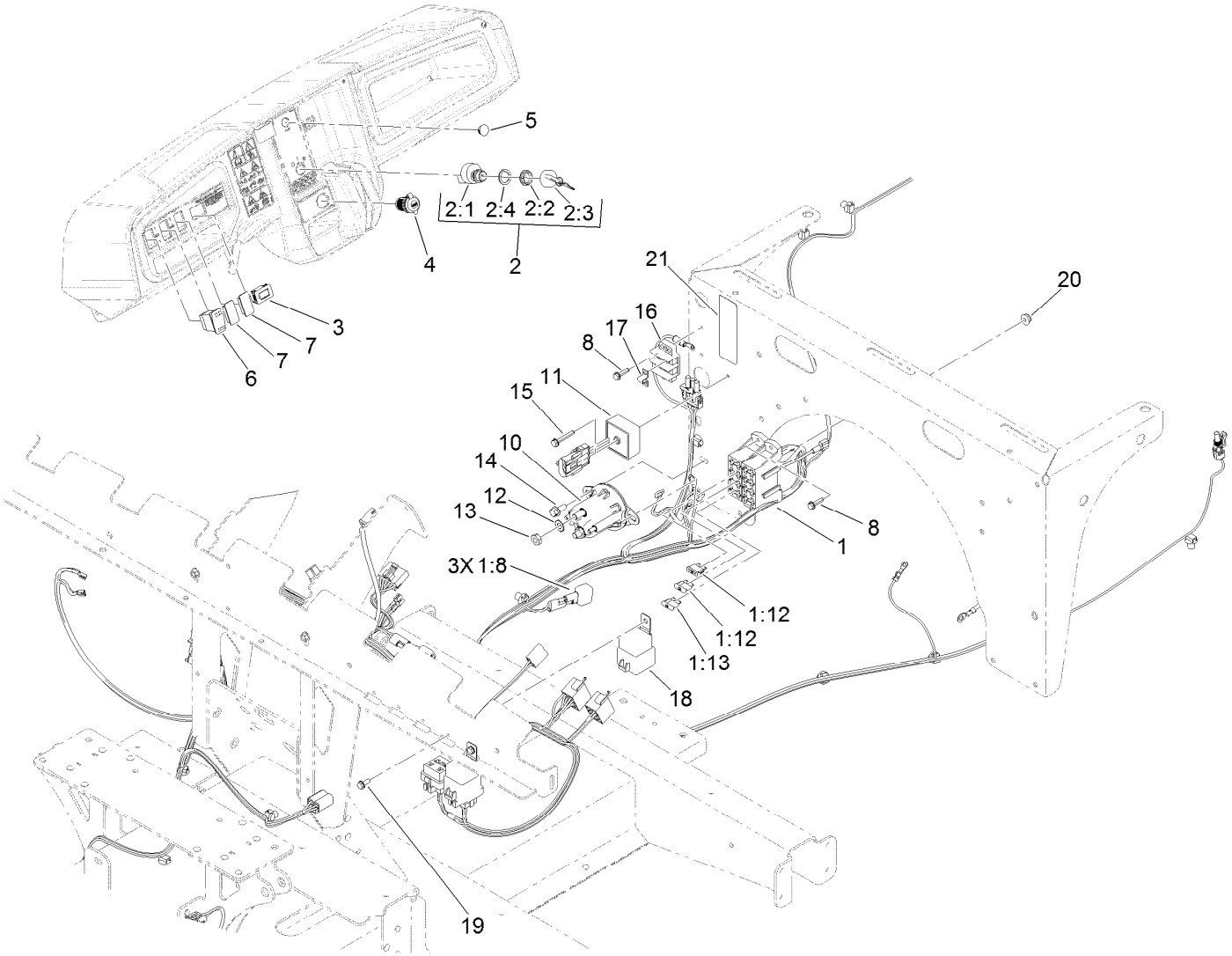

Electrical Assembly

Ref.	Part Number	Qty.	Description
1	122-1143	1	Harness-Wire
1:8	100-4918	3	Diode
1:12	109355	1	Fuse-Blade, 15 Amp
1:13	218-578	2	Fuse-Blade, 10 Amp
1:14	32160-093	1	Connector-Mp280, 2M ●
1:23	32160-056	1	Connector-Amp ●
2	122-1145	1	Ignition Switch ASM
2:1		1	Switch-Ignition ■
2:2	108-8660	1	Nut-Mounting
2:3	106-5270	1	Ignition Key Set
2:4	108-8659	1	Washer-Backup
3	120-2244	1	Hourmeter
4	131-8388	1	Socket-USB
5	94-5627	1	Plug
6	95-8999	1	Switch

Ref.	Part Number	Qty.	Description
7	99-7420	2	Plug-Hole
8	100-4351	4	Screw-HWH
10	114-3315	1	Solenoid
11	119-9492	1	Regulator-Voltage
12	3255-8	2	Washer-Lock
13	3220-2	2	Nut-Jam
14	3234-33	2	Screw-HHF
15	100-4352	1	Screw-HWH
16	42862	1	Block-Terminal, Ground
17	42863	1	Strip-Jumper
18	99-7430	2	Relay-Mini
19	32144-1	2	Screw-Taptite
20	104-7201	2	Nut-HF
21	131-8552	1	Decal-Fuse Block, 12V

● Not illustrated

■ Not serviced separately

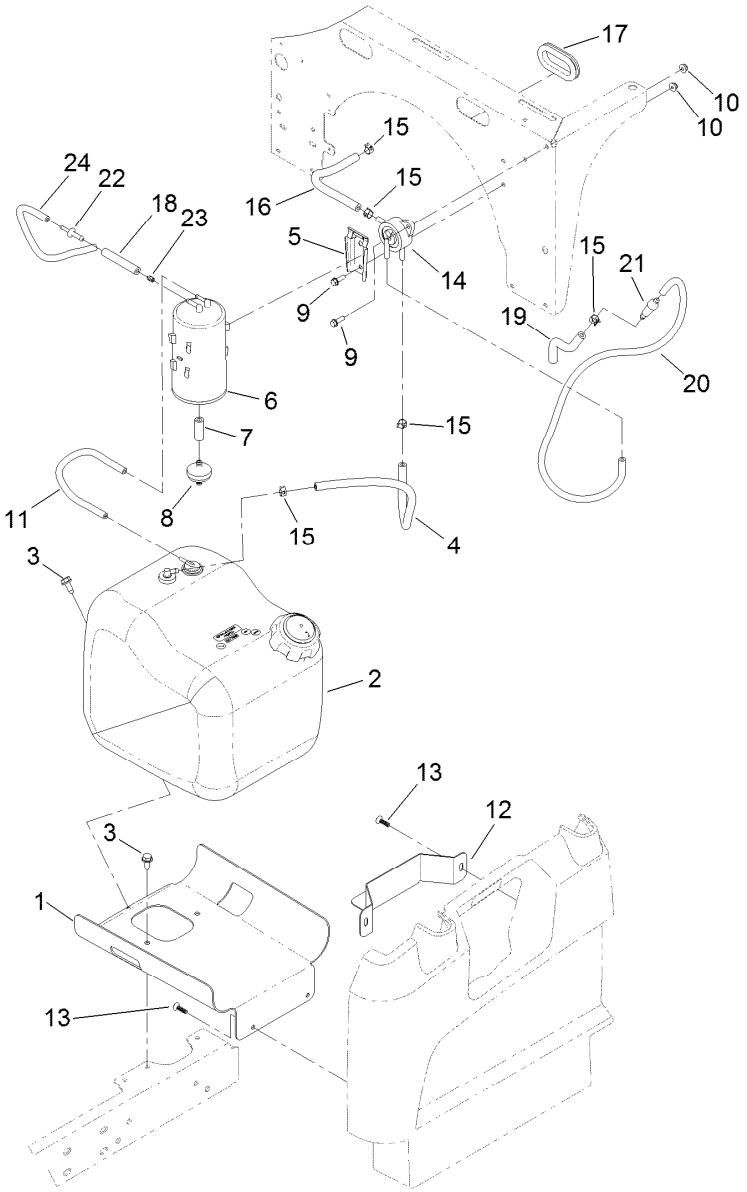

Fuel System Assembly

Ref.	Part Number	Qty.	Description
1	127-7739-03	1	Mount-Tank, Fuel
2	127-7849	1	Fuel Tank ASM
3	32144-70	3	Screw-HWHTF
4	114-4428	1	Hose-Fuel
5	114-0292	1	Bracket-Canister, Carbon
6	127-8685	1	Canister-Carbon
7	106-5317	1	Hose-Fuel
8	115-7854	1	Filter-Fuel, Inline
9	32105-15	4	Screw-HWH
10	104-7201	4	Nut-HF
11	115-4735	1	Hose-Fuel
12	127-7845-03	1	Bracket-Tank, Fuel

Ref.	Part Number	Qty.	Description
13	120-2349	4	Screw
14	131-8526	1	Pump-Fuel
15	2412-98	5	Clamp-Hose
16	109-0282	1	Hose-Fuel
17	240-12	1	Grommet-Rubber
18	114-3765	1	Hose-Fuel
19	109-0300	1	Hose-Fuel
20	110-3254	1	Hose-Fuel
21	138-5553	1	Filter-Fuel, 250 Micron
22	117-5399	1	Adaptor-Orifice
23	120-2038	1	Cartridge-Valve, Check
24	110-8181	1	Hose-Fuel

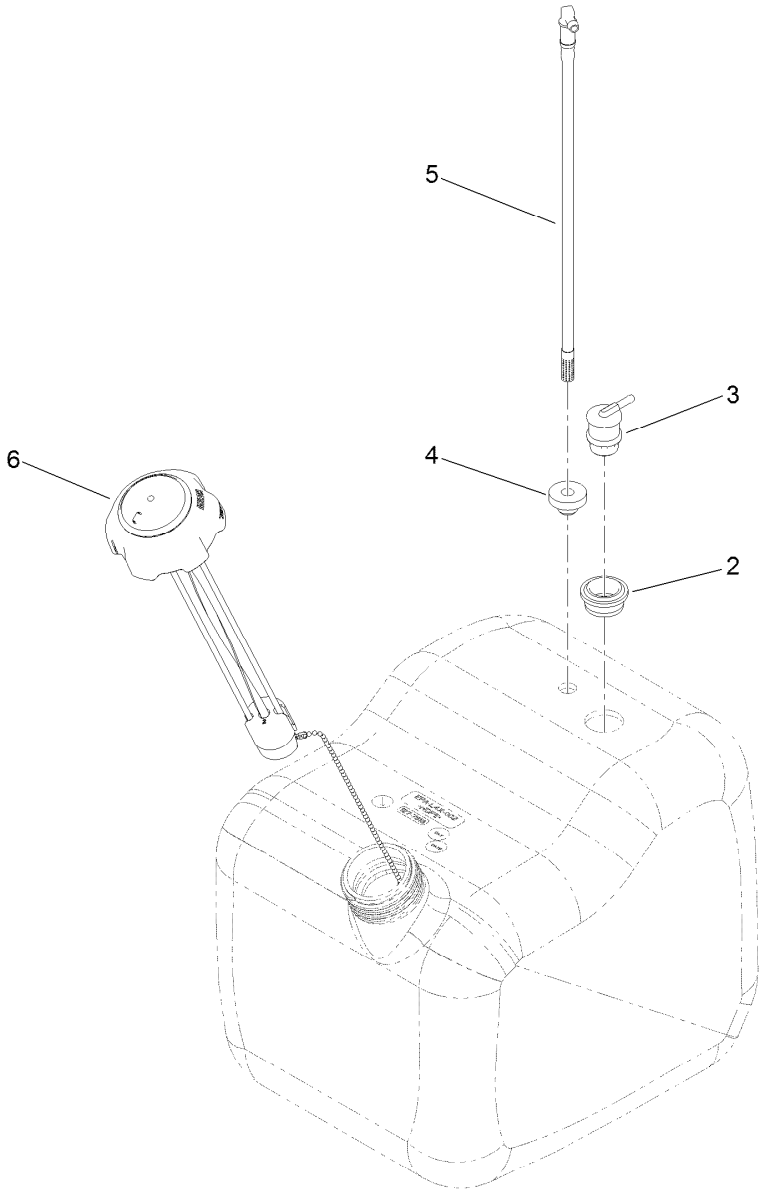

Fuel Tank Assembly No. 127-7849

Ref.	*Part Number*	*Qty.*	*Description*
2	114-0284	1	Grommet
3	114-0285	1	Valve-Rollover
4	46-6560	1	Bushing
5	115-9044	1	Pipe-Stand
6	131-8357	1	Cap-Gauge

Attachments and Accessories

For 07042 Workman GTX Utility Vehicle with Bucket Seat

Product Name	Model/Part
Workman GTX 2-Person Canopy	07921
Multi-passenger Kit	07133
Bench Seat Base Kit (2016)	07135
12V Electric Lift Kit	07144
Brush Guard Kit	07145
Front Hitch Kit, Workman GTX Series Utility Vehicles with Brush Guard	07146
Front Hitch Kit, Workman GTX or MDX Series Utility Vehicles without Brush Guard	07147
Steel Flat Bed Kit	07148
Storage Box Kit	07156
Brake and Signal Light Kit	132-8579
Walk Spreader Mounting Kit	07029
6in L-Track Kit	07158
2in L-Track Kit	07159
Hose Reel Mounting Kit	07027
Class 1 Draw Bar Kit	133-3095
Horn Kit	133-3016
Reverse Alarm Kit	133-3018
Power Point Kit	131-8550
Parking Brake Alarm Kit	133-3019
Trash Can Mounting Kit	07028
Spark Arrestor Screen Kit	133-7109
Bed Rack Kit	07031
Cab Kit	07142
Canopy Kit	07140
Mount-Ball	133-7116
Road Light and Homologation Kit	133-7128
12V Electric Bed Lift Kit	07167
Front Spring Kit	133-7145
Canopy Mount Kit, Workman GTX Utility Vehicle with Extended Flatbed	133-7160
MVP Kit 400 Hour	136-6280
Cab Mount Kit, Workman GTX Utility Vehicle with Extended Flatbed	133-7198
Service Hood ASM	133-7209
ROPS Kit	07032
Crated Finishing Kit	07045
Cargo Bed Kit	07046
Bench Seat Base Kit	07047
Bucket Seat Base Kit	07048
Small Bedrack Mount Grip Kit	136-6311
Large Bedrack Mount Grip Kit	136-6312
Wireless Hourmeter Kit	136-6323
Optional Rear Tire GTX-K500	137-2785
Plate-Skid	137-2886-03
Seat Hinge Kit	133-7346
Switch-Ignition ASM, Key1	138-3500
Switch-Ignition ASM, Key2	138-3501
Switch-Ignition ASM, Key3	138-3502

Attachments and Accessories (continued)

Switch-Ignition ASM, Key4 138-3503
Switch-Ignition ASM, Key5 138-3504
Glove Box Cover Kit 137-2883
Door Mount Mirror Kit 136-1997
Lift Kit 07414
Folding Windshield Kit, Workman GTX Utility Vehicle with Canopy 07923
Shim-Limiter 119-0807
Exterior Mirror Kit 130-5448
Interior Mirror Kit 130-5449
Beacon Kit 130-5484
Work Light Kit 130-5485
Windshield Washer Fluid Kit, 2015 and after Workman MD/HD Series Utility Vehicle 130-5615
Small Seat Cover 131-6690
Wide Angle Mirror Kit 133-1009
Wide Angle Mirror Kit 133-1038
Bracket-Mount, Radio 133-7111-03
GTX Ball Cage ROPS, Certified 07161
Canopy W/ ROPS 07169
Canopy Mount Kit, Workman GTX Utility Vehicle with Extended Flatbed 07199

Notes:

Notes:

TORO®

Count on it.