Form No. 3438-675 Rev B

TORO®

Count on it.

Parts Catalog

Workman® HDX

4-Wheel Drive Utility Vehicle with Bed

Model No. 07386—Serial No. 405710000 and Up

Register at www.Toro.com.
Original Instructions (EN)

3438-675 B

Ordering Replacement Parts

To order replacement parts, please supply the part number, the quantity, and the description of each part desired.

Understanding Reference Numbers

Each identified part in an illustration has a reference number. The reference number for a part also appears in the parts list, along with other information about the part.

This catalog uses two special reference number formats, one to indicate parts in a service assembly and another to indicate the quantity of a given part in an illustration.

Service Assembly Reference Numbers

Parts in service assemblies have reference numbers in the form a:b. The a represents the reference number of the entire service assembly and the b represents a sequential number unique to each part within the service assembly.

For example, a wheel assembly might be identified by reference number 6, the tire by 6:1, the valve by 6:2, and the wheel by 6:3. When you order the assembly identified by reference number 6, you receive all parts identified by reference numbers 6:1,6:2, and 6:3. However, you may also order any part individually. Reference numbers of this type appear in illustration and in parts lists.

Reference Numbers Indicating Quantity

In an illustration, if a reference number indicates more than one part, the reference number has the form nX y. The n represents the quantity of the part, the X is the multiplication symbol, and the y represents the reference number.

For example, in an illustration, the reference number 2X 37 means that two of the parts identified by reference number 37 are indicated.

Contents

Front Frame Assembly . . . 5
Rear Frame and Suspension Assembly . . . 6
Rear Axle Assembly . . . 7
Brake Caliper Assembly No. 127-7424 . . . 8
Driveshaft Assembly No. 138-0587 . . . 9
Front and Rear Brake Line Assembly . . . 10
Front Suspension Assembly . . . 11
Steering and Front Wheel Assembly . . . 12
Steering Linkage Assembly . . . 13
Hydraulic Cylinder Assembly No. 120-5059 . . . 14
Front Control Arm Assembly . . . 15
Brake and Clutch Pedal Assembly . . . 16
Master Cylinder Assembly No. 104-6782 . . . 17
Accelerator Assembly . . . 18
Console Assembly . . . 19
Shift Assembly No. 106-7887 . . . 21
Bumper, Hood and Seat Base Assembly . . . 22
Dash Assembly . . . 23
Steering Hydraulic Assembly . . . 24
Steering Valve Assembly No. 120-4813 . . . 25
Seat Assembly . . . 26
Roll-Over Protection System Assembly . . . 27
Full Bed and Side Panel Assembly . . . 28
Engine Sub Frame Assembly . . . 29
Engine and Exhaust Assembly . . . 30
Cooling System Assembly . . . 31
Radiator Assembly . . . 32
Clutch Linkage Assembly . . . 33
Transaxle Assembly . . . 34
Case Assembly 4 Wheel Drive Transaxle Assembly No. 115-2175 . . . 35
Center Plate Assembly 4 Wheel Drive Transaxle Assembly No. 115-2175 . . . 36
Main Shaft Assembly 4 Wheel Drive Transaxle Assembly No. 115-2175 . . . 37
Reduction Shaft Assembly 4 Wheel Drive Transaxle Assembly No. 115-2175 . . . 38
Reverse Shaft Assembly 4 Wheel Drive Transaxle Assembly No. 115-2175 . . . 39
Main Shift Assembly 4 Wheel Drive Transaxle Assembly No. 115-2175 . . . 40
Hi-Lo Shift Assembly 4 Wheel Drive Transaxle Assembly No. 115-2175 . . . 41
Countershaft Assembly 4 Wheel Drive Transaxle Assembly No. 115-2175 . . . 42
Differential Gear Assembly 4 Wheel Drive Transaxle Assembly No. 115-2175 . . . 43
Differential Carrier Assembly 4 Wheel Drive Transaxle Assembly No. 115-2175 . . . 44
Differential Lock Assembly 4 Wheel Drive Transaxle Assembly No. 115-2175 . . . 45
Axle Shaft Assembly 4 Wheel Drive Transaxle Assembly No. 115-2175 . . . 46
Front Drive Assembly 4 Wheel Drive Transaxle Assembly No. 115-2175 . . . 47
4 Wheel Drive Assembly . . . 48
Differential Assembly No. 119-0824 . . . 49
Drive Shaft Assembly No. 136-6327 . . . 50
Battery Assembly . . . 51
Tail Light and Fender Assembly . . . 52
Fuel System Assembly . . . 53
Hydraulic Lift Cylinder Assembly . . . 54
Hydraulic Cylinder Assembly No. 133-0620 . . . 56
Main Hydraulic Pump and Lift Valve Assembly . . . 57
Control Valve Assembly No. 43-1950 . . . 59
Hydraulic Gear Pump Assembly No. 114-8302 . . . 60
Air Cleaner Assembly . . . 61

© 2020—The Toro® Company

8111 Lyndale Avenue South
Bloomington, MN 55420

Contact us at www.Toro.com.
Printed in the USA.

All Rights Reserved

Contents (continued)

Air Cleaner Assembly No. 138-5650 62
Front and Rear Wire Harness Assembly 63
Crankcase Assembly 64
Oil Pan Assembly 65
Cylinder Head Assembly 66
Gear Case and Oil Filter Cartridge Assembly 67
Cylinder Head Cover Assembly 68
Dipstick, Guide and Oil Pump Assembly 69
Main Bearing Case Assembly 70
Cam Shaft and Idle Gear Shaft Assembly 71
Piston and Crankshaft Assembly 72
Flywheel, Starter and Sensor Switch Assembly 73
Injection and Fuel Pump Covers Assembly 74
Alternator and Pulley Assembly 75
Alternator Components Assembly 76
Starter Components Assembly 77
Thermostat and Water Pump Assembly 78
Valve and Rocker Arm Assembly 79
Inlet Manifold Assembly 80
Exhaust Manifold Assembly 81
Wire Harness Assembly 82
Electronic Control Unit Assembly 83
Operator Manual and Miscellaneous Engine Parts 84
Upper Engine Gasket Kit 85
Lower Engine Gasket Kit 86
Attachments and Accessories 87

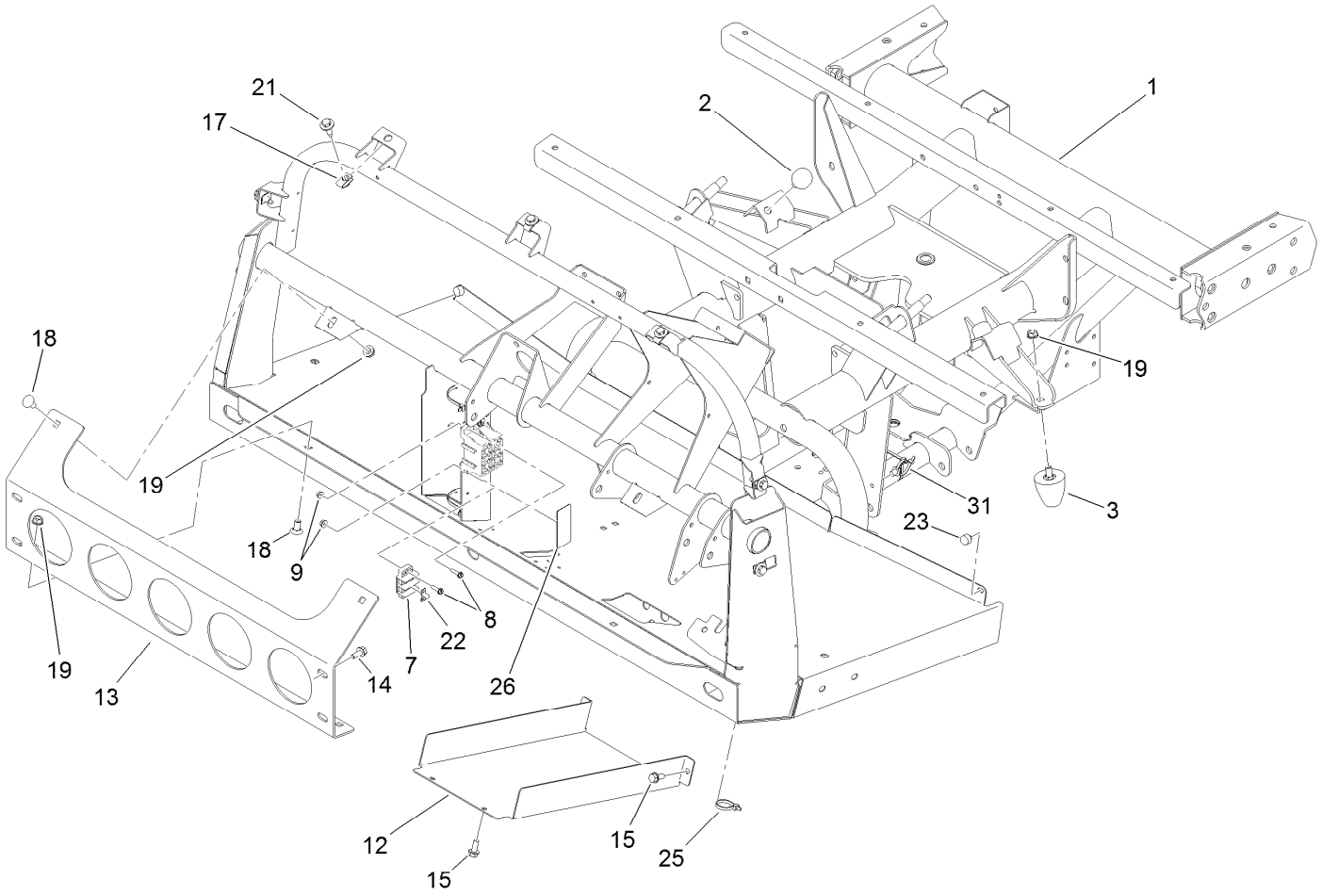

Front Frame Assembly

Ref.	Part Number	Qty.	Description
1	138-9251	1	Frame-Front
2	87-2440	2	Bumper-Rubber
3	26-0071	2	Snubber-Rubber
7	42862	1	Block-Terminal, Ground
8	32105-13	6	Screw-HWH
9	3290-148	6	Nut-HF
12	106-2427-03	1	Cover
13	114-8272-03	1	Bracket-Bumper
14	3234-5	4	Screw-HHF
15	32144-70	4	Screw-HWHTF

Ref.	Part Number	Qty.	Description
17	94-2413	7	Nut-U
18	3231-21	4	Screw-CARR
19	3290-357	6	Nut-HHF, Whiz
21	114-8418	7	Screw-HWH, Sems
22	42863	1	Strip-Jumper
23	107-8042	2	Bumper-Rubber
25	3290-379	9	Tie-Cable
26	115-7813	1	Decal-Fuse
31	32180-030	2	Clip-Tie

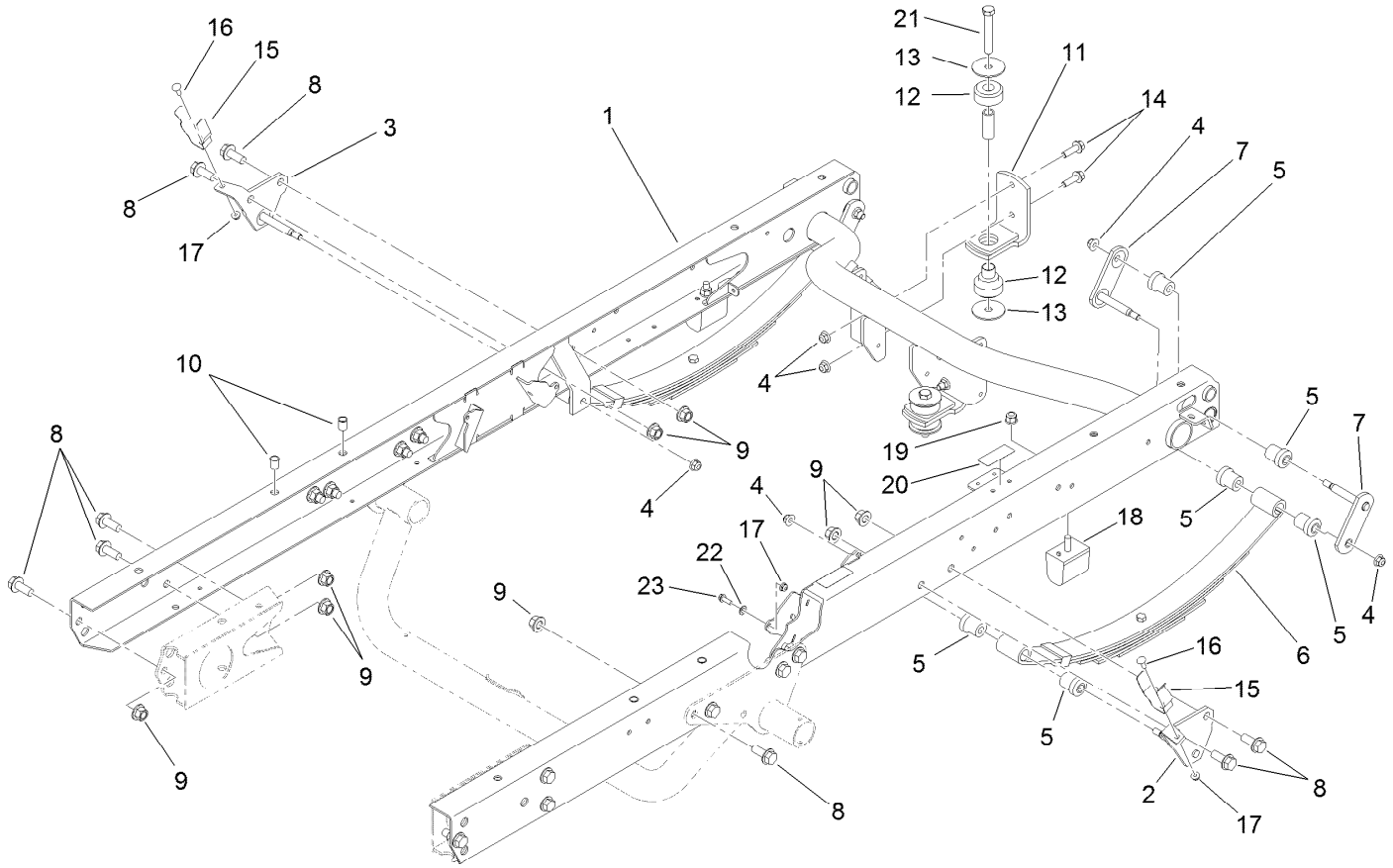

Rear Frame and Suspension Assembly

Ref.	Part Number	Qty.	Description
1	115-2255-03	1	Frame-Rear
2	131-3474	1	Mount-Spring, LH
3	131-3472	1	Mount-Spring, RH
4	104-8301	10	Nut-HF, NI
5	87-4760	12	Bushing-Rubber
6	87-1490	2	Spring-Leaf, Rear
7	131-3476	4	Shackle
8	3234-38	18	Screw-HHF
9	99-5107	18	Nut-Lock
10	32148-9	4	Nut-Clinch
11	87-5800-03	2	Mount-Transaxle
12	106-7865	2	Mount-Engine

Ref.	Part Number	Qty.	Description
13	87-5100	4	Washer-Snubbing
14	3234-24	4	Screw-HHF
15	108-3109	2	Retainer-Cylinder
16	3229-1	2	Screw-CARR
17	104-7201	3	Nut-HF
18	87-3470	2	Bumper
19	103-9511	2	Nut-Lock, NI
20	115-2047	2	Decal-Surface, Hot
21	33116-080	2	Screw-HH
22	3255-8	1	Washer-Lock
23	32105-15	1	Screw-HWH

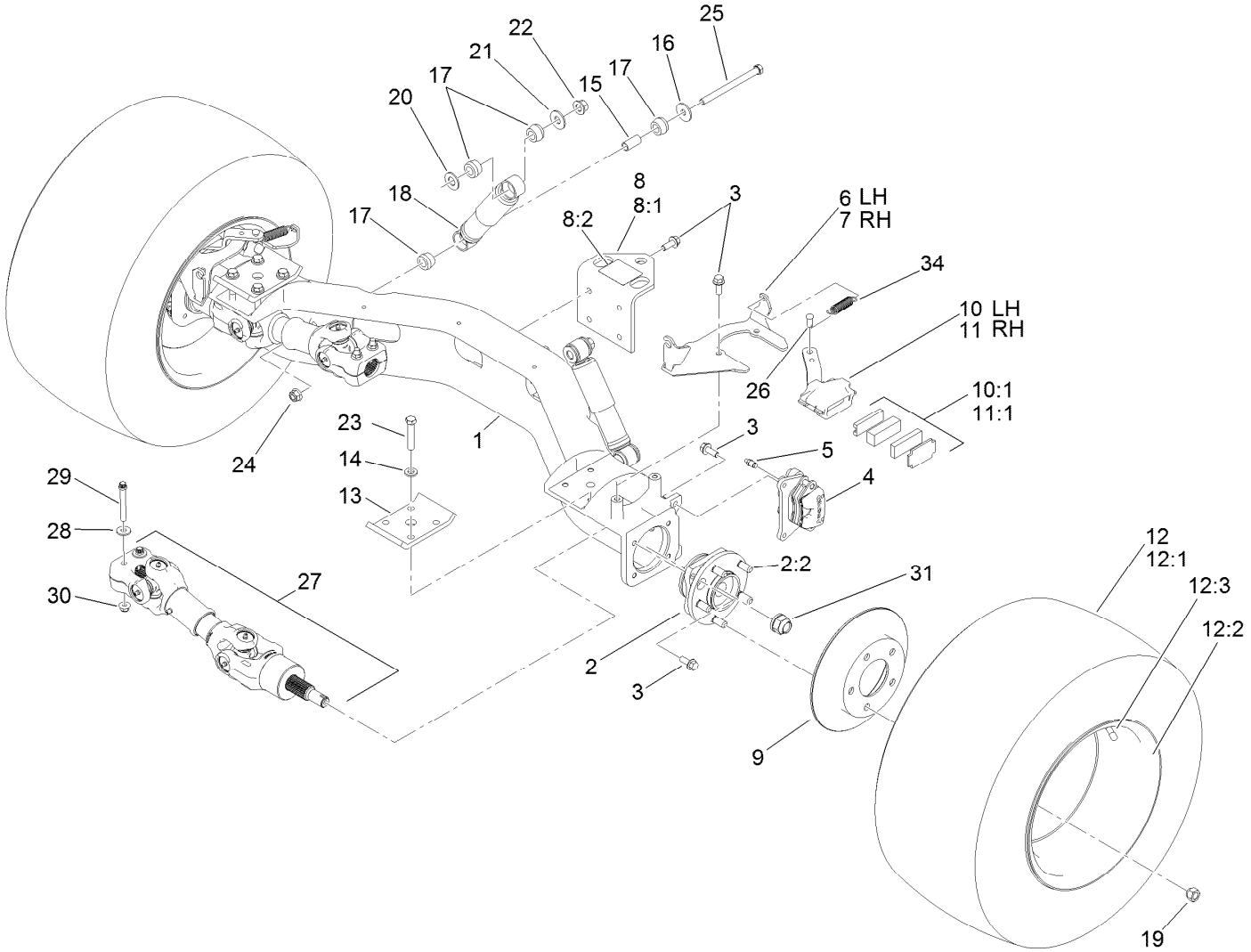

Rear Axle Assembly

Ref.	Part Number	Qty.	Description
1	119-9515	1	Axle-Rear
2	121-9751	2	Hub-Bearing, Wheel
2:2	121-9752	5	Stud-Wheel
3	3234-11	20	Screw-HHF
4	127-7424	2	Brake Caliper ASM
5	119-9509	2	Screw-Bleed
6	115-2362-03	1	Bracket-Caliper, LH
7	115-2359-03	1	Bracket-Caliper, RH
8	115-7742	1	Hitch ASM
8:1	92-5951-03	1	Angle-Hitch
8:2	136-1163	1	Decal-Load, Towing
9	114-8351	2	Rotor-Brake
10	114-8365	1	Caliper-Mechanical, LH
10:1	115-7847	1	Parking Brake Pad Kit
11	114-8366	1	Caliper-Mechanical, RH
11:1	115-7847	1	Parking Brake Pad Kit
12	131-8428	2	Tire/Wheel ASM
12:1	131-6673	1	Tire-Rear
12:2	131-8429	1	Wheel
12:3	232-27	1	Stem-Valve

Ref.	Part Number	Qty.	Description
13	87-7470-03	2	Plate-Spring, Clamp
14	87-7480	8	Washer
15	87-3600	2	Spacer-Absorber, Shock
16	87-5330	2	Washer
17	87-3920	8	Bushing
18	121-9774	2	Absorber-Shock
19	242-50	10	Nut-Lug
20	3256-27	2	Washer-Flat
21	3256-6	2	Washer-Flat
22	99-5107	2	Nut-Lock
23	115-2398	8	Bolt-HH
24	114-8417	2	Nut-HF, NI
25	114-8424	2	Screw-HH
26	283-85	2	Pin-Clevis
27	138-0587	2	Driveshaft ASM
28	80-6990	4	Washer-Hardened
29	98-2939	4	Screw-Cap
30	104-8301	4	Nut-HF, NI
31	115-2164	2	Nut-Spindle
34	104-6415	2	Spring-Return, Pedal

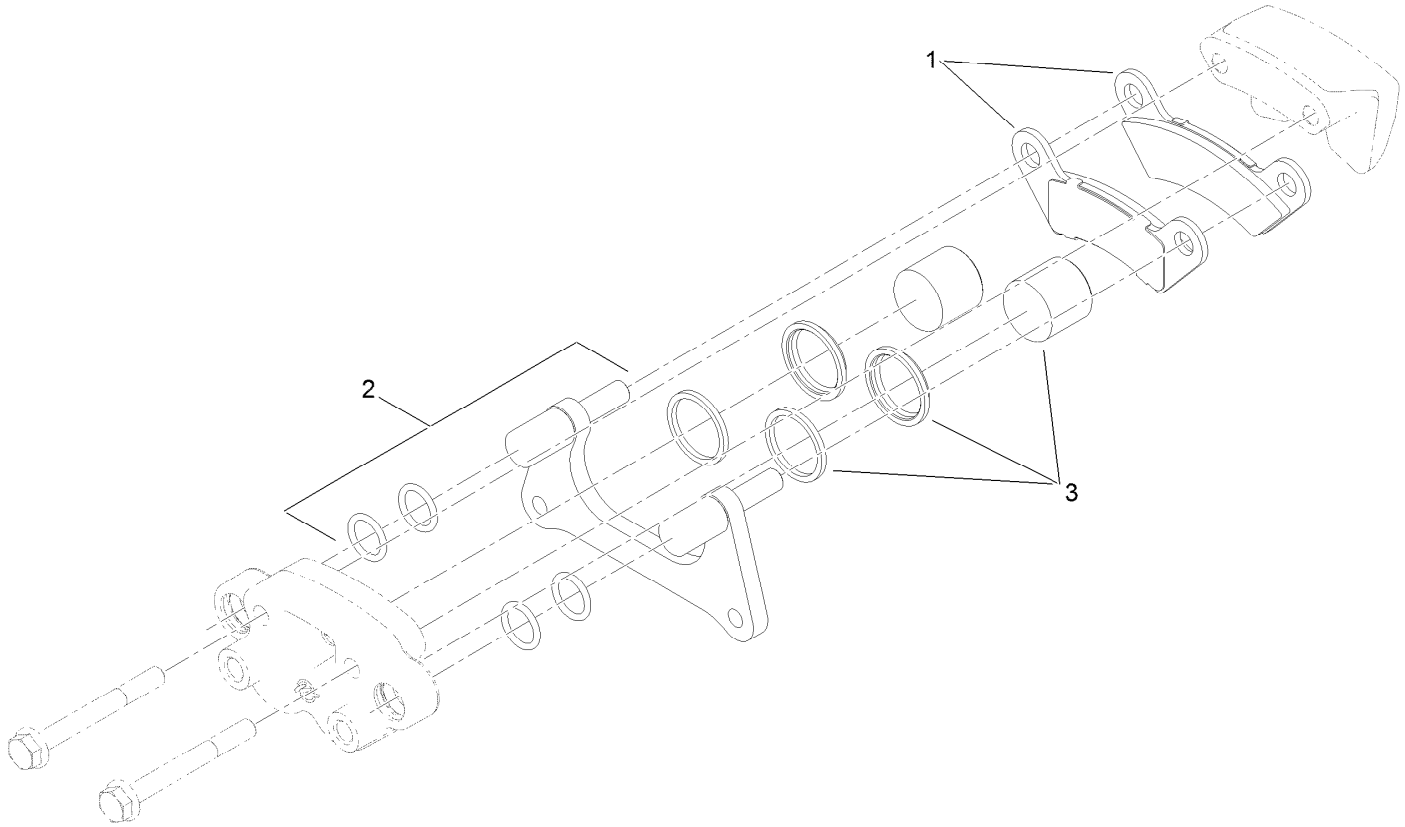

Brake Caliper Assembly No. 127-7424

Ref.	*Part Number*	*Qty.*	*Description*
1	133-0628	1	Brake Pad Kit
2	119-9511	1	Bracket Kit
3	133-0614	1	Piston Kit

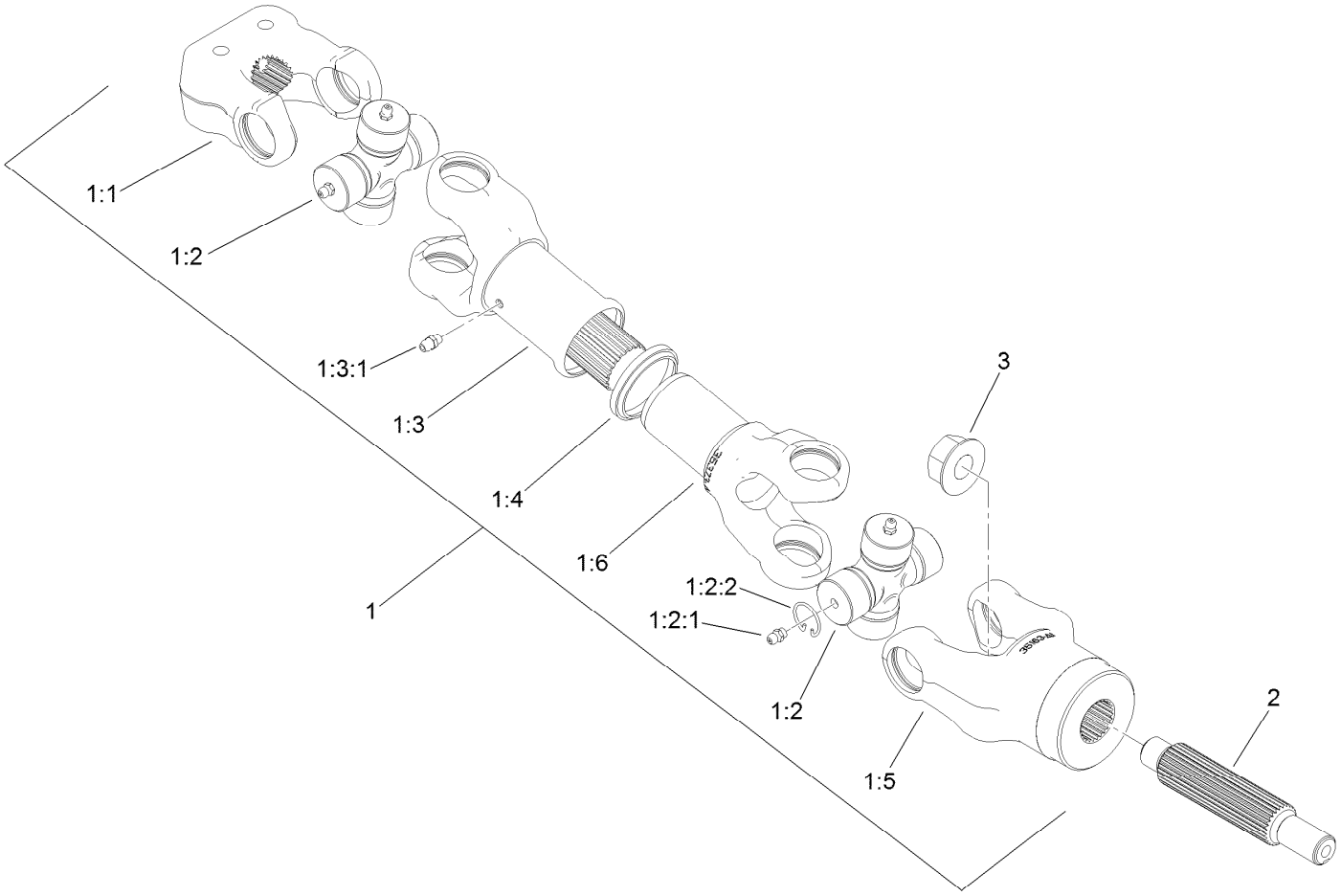

Driveshaft Assembly No. 138-0587

Ref.	*Part Number*	*Qty.*	*Description*
1	114-8367	1	Driveshaft ASM
1:1	98-2940	1	Yoke
1:2	92-4187	2	Cross And Bearing Kit
1:2:1	302-58	4	Fitting-Straight
1:2:2	92-4188	4	Ring-Snap
1:3	92-4179	1	Yoke-Tube, Shaft And Seal
1:3:1	302-5	1	Fitting-Grease
1:4	92-4180	1	Seal
1:5	115-2351	1	Yoke
1:6	92-4182	1	Yoke-Telescoping
2	115-7771	1	Shaft-Splined
3	32128-53	1	Nut-HF

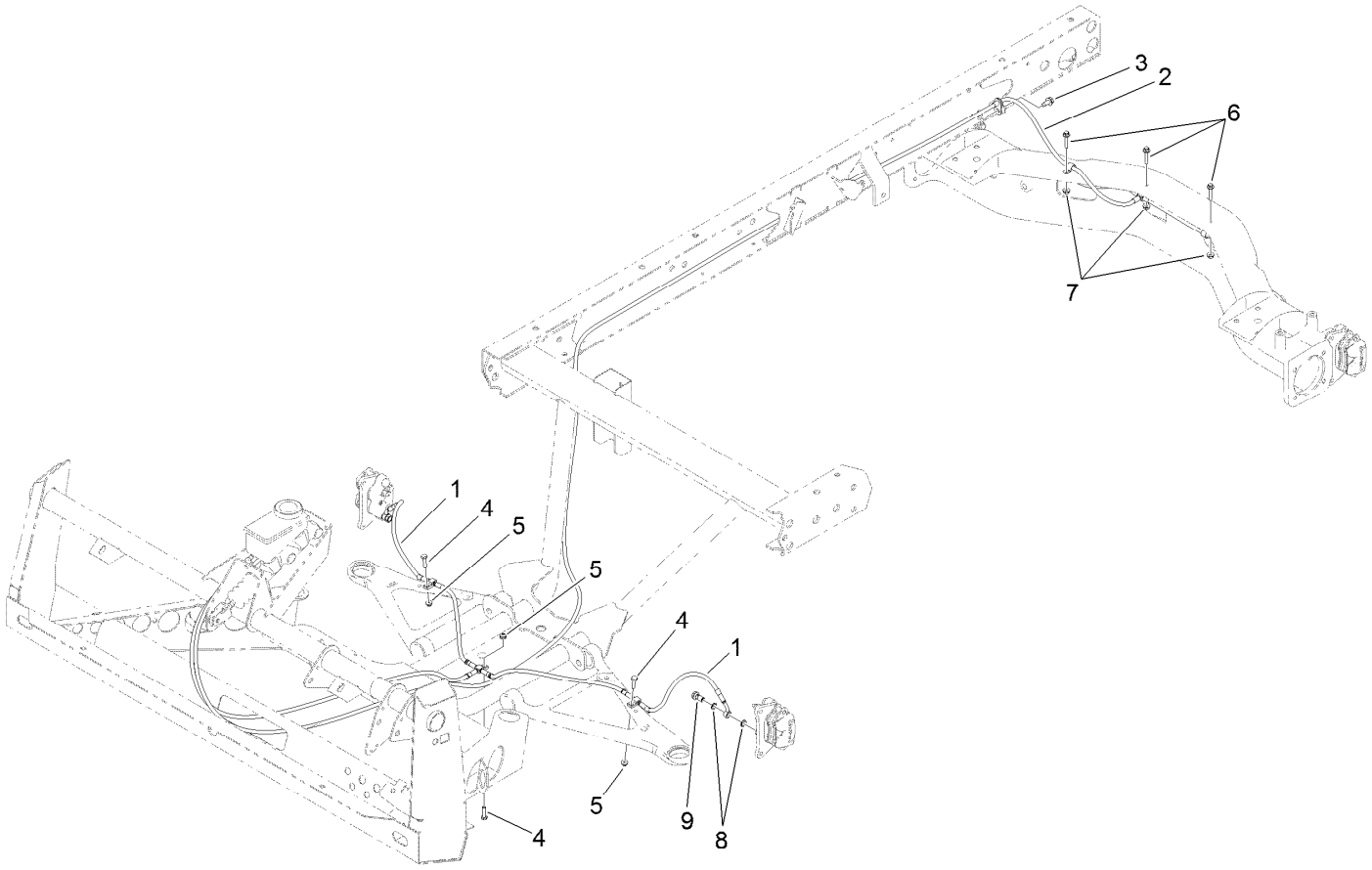

Front and Rear Brake Line Assembly

Ref.	*Part Number*	*Qty.*	*Description*
1	119-9682	1	Front Brake Line ASM
2	119-9681	1	Rear Brake Line ASM
3	32144-70	1	Screw-HWHTF
4	321-6	3	Screw-HH
5	104-7201	3	Nut-HF
6	3234-21	3	Screw-HHF
7	32128-33	3	Nut-HF
8	115-2341	8	Washer-Banjo
9	120-4875	4	Bolt-Flange, Banjo

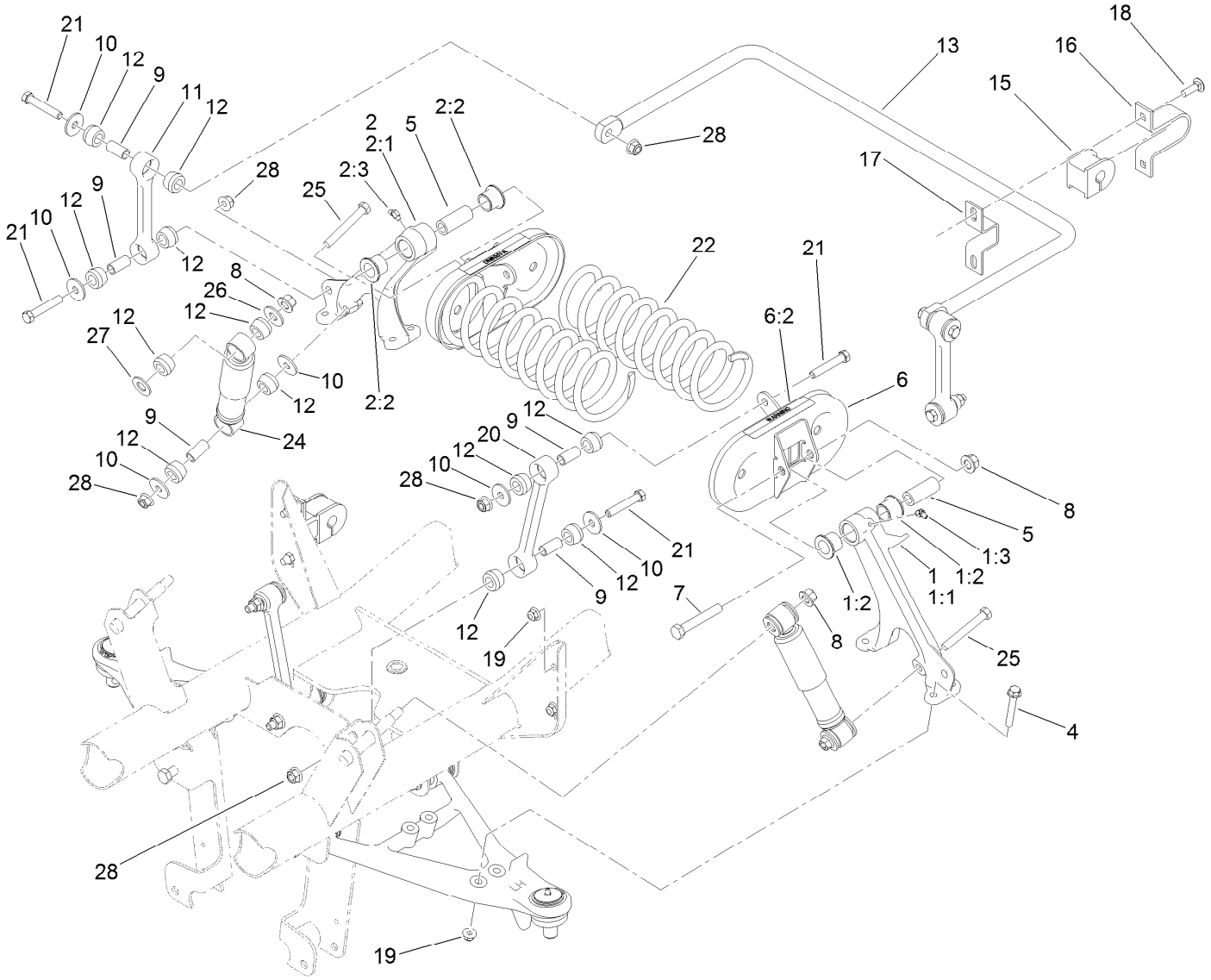

Front Suspension Assembly

Ref.	Part Number	Qty.	Description
1	137-1693	1	Control Arm-LH
1:1	87-0160-03	1	Tower-Control Arm, LH
1:2	33-3090	2	Bushing
1:3	302-11	1	Fitting-Lube, 45 DEG
2	137-1692	1	Control Arm-RH
2:1	87-0150-03	1	Tower-Control Arm, RH
2:2	33-3090	2	Bushing
2:3	302-11	1	Fitting-Lube, 45 DEG
4	3234-39	8	Screw-HHF
5	87-2500	2	Sleeve-Spring, Pivot
6	105-7958	2	Spring Cradle ASM
6:2	93-9879	1	Decal-Warning
7	325-13	2	Screw-HH
8	99-5107	4	Nut-Lock
9	87-3600	10	Spacer-Absorber, Shock
10	87-5330	12	Washer

Ref.	Part Number	Qty.	Description
11	119-6725	2	Link, Anti-Sway Bar
12	87-3920	24	Bushing
13	133-0633-03	1	Bar-Anti-Sway, HD
15	87-3910	2	Bushing-Rubber
16	87-4010-03	2	Clamp-Bar, Sway
17	87-3890-03	2	Bracket-Bar, Sway
18	3231-25	4	Bolt-CARR
19	104-8301	12	Nut-HF, NI
20	119-6724	2	Link-Stabilizer
21	324-10	8	Screw-HH
22	105-4183-01	2	Spring-Compression
24	121-9774	2	Absorber-Shock
25	324-13	2	Screw-HH
26	3256-6	2	Washer-Flat
27	3256-27	2	Washer-Flat
28	114-8417	10	Nut-HF, NI

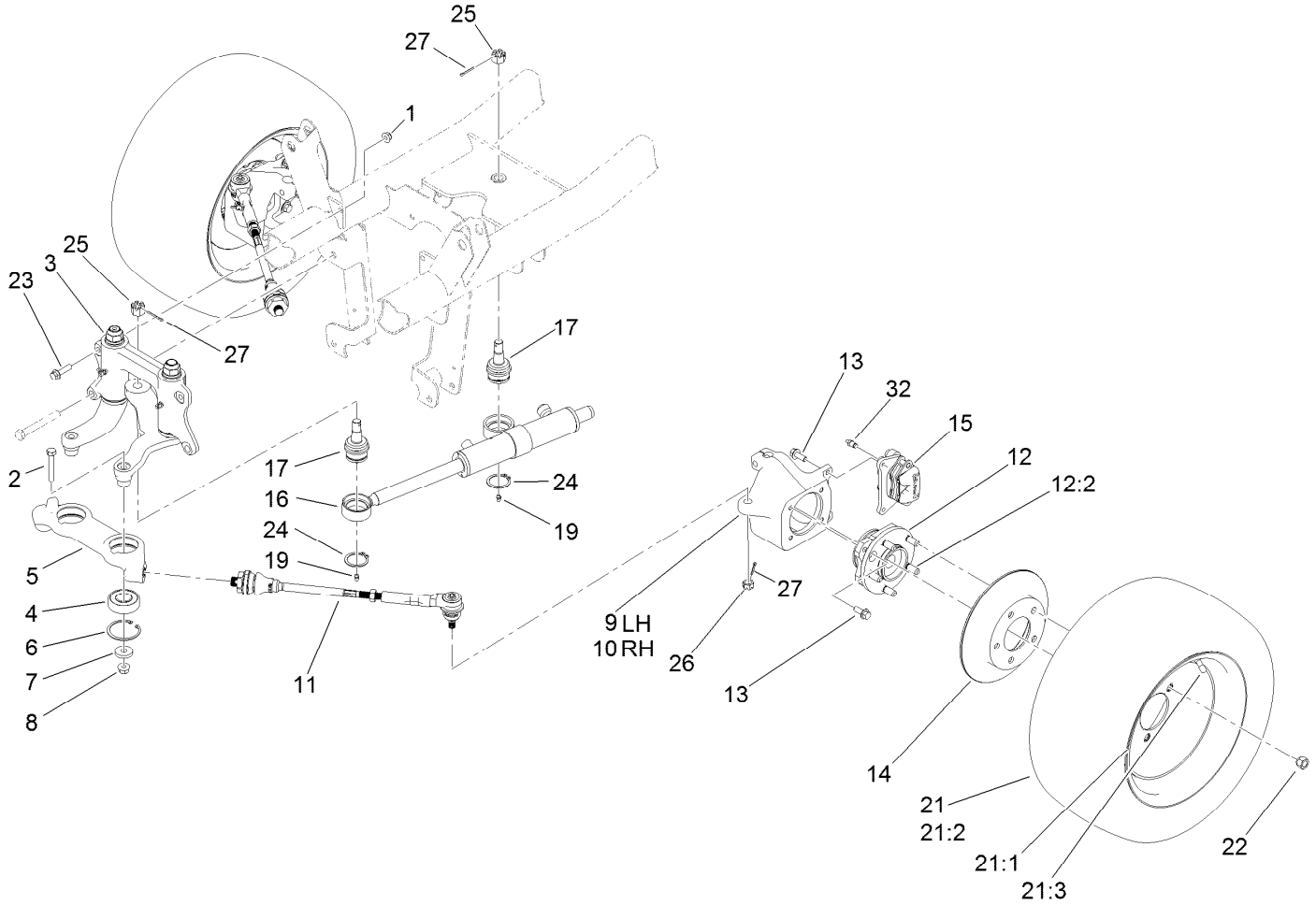

Steering and Front Wheel Assembly

Ref.	Part Number	Qty.	Description
1	104-8301	2	Nut-HF, NI
2	324-10	2	Screw-HH
3		1	Steering Linkage ASM ●
4	119-9548	2	Bearing-Ball
5	114-8296	1	Link-Center
6	32120-22	2	Ring-Snap, Internal
7	112843	2	Washer
8	114-8417	2	Nut-HF, NI
9	119-9513	1	Knuckle-LH
10	119-9514	1	Knuckle-RH
11	114-8356	2	Tie Rod ASM
12	121-9751	2	Hub-Bearing, Wheel
12:2	121-9752	5	Stud-Wheel
13	3234-11	12	Screw-HHF
14	114-8351	2	Rotor-Brake

Ref.	Part Number	Qty.	Description
15	127-7424	2	Brake Caliper ASM
16	120-5059	1	HYD Cylinder ASM
17	106-6774	2	Joint-Ball
19	302-5	2	Fitting-Grease
21	131-8430	2	Tire/Wheel ASM
21:1	131-8431	1	Wheel
21:2	131-6670	1	Tire
21:3	232-27	1	Stem-Valve
22	242-50	10	Nut-Lug
23	114-4681	2	Screw-HHF
24	32151-104	2	Ring-Retaining, External
25	32136-14	2	Nut-Hst
26	32136-3	2	Nut-SHH
27	3272-12	4	Pin-Cotter
32	119-9509	2	Screw-Bleed

● Not serviced separately

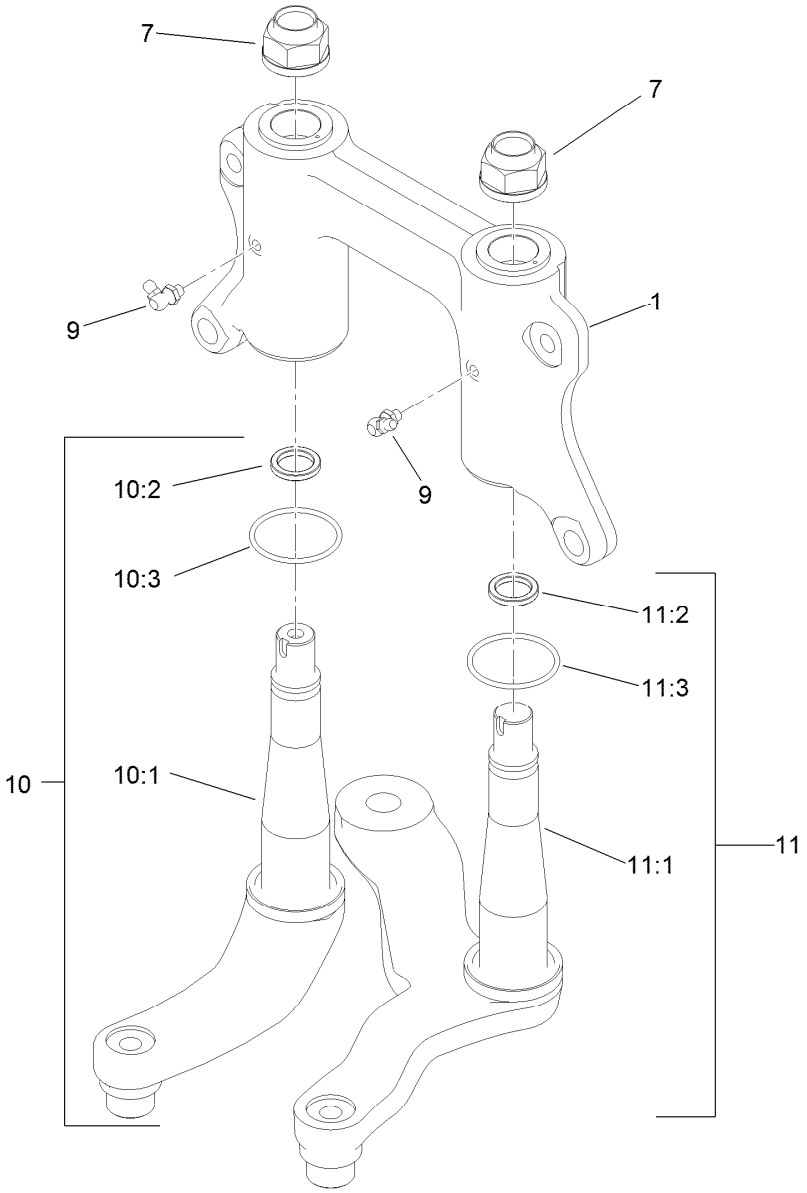

Steering Linkage Assembly

Ref.	*Part Number*	*Qty.*	*Description*
1	132-6767	1	Mount-Pivot, W/Bushings
7	115-2164	2	Nut-Spindle
9	302-60	2	Fitting-Grease
10	132-0794	1	Idler Arm ASM
10:1	132-0792	1	Idler Arm And Thrust Washer ASM
10:2	93-7510	1	Ring-Quad
10:3	131-3499	1	O-Ring
11	132-0795	1	Pitman Arm ASM
11:1	132-0793	1	Pitman Arm And Thrust Washer ASM
11:2	93-7510	1	Ring-Quad
11:3	131-3499	1	O-Ring

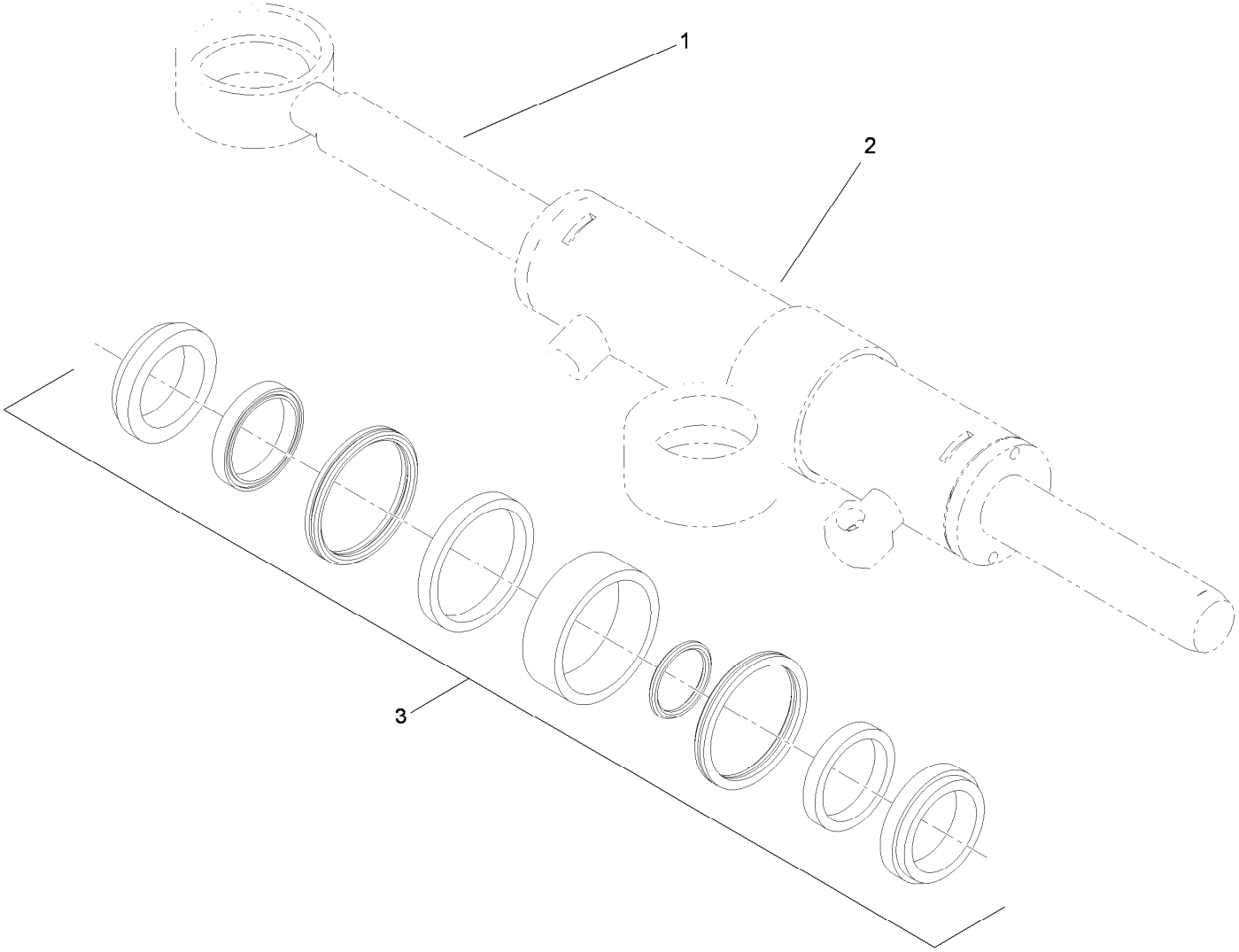

Hydraulic Cylinder Assembly No. 120-5059

Ref.	*Part Number*	*Qty.*	*Description*
1		1	Rod-Cylinder ●
2		1	Body-Cylinder ●
3	115-2160	1	Cylinder Repair Kit

● Not serviced separately

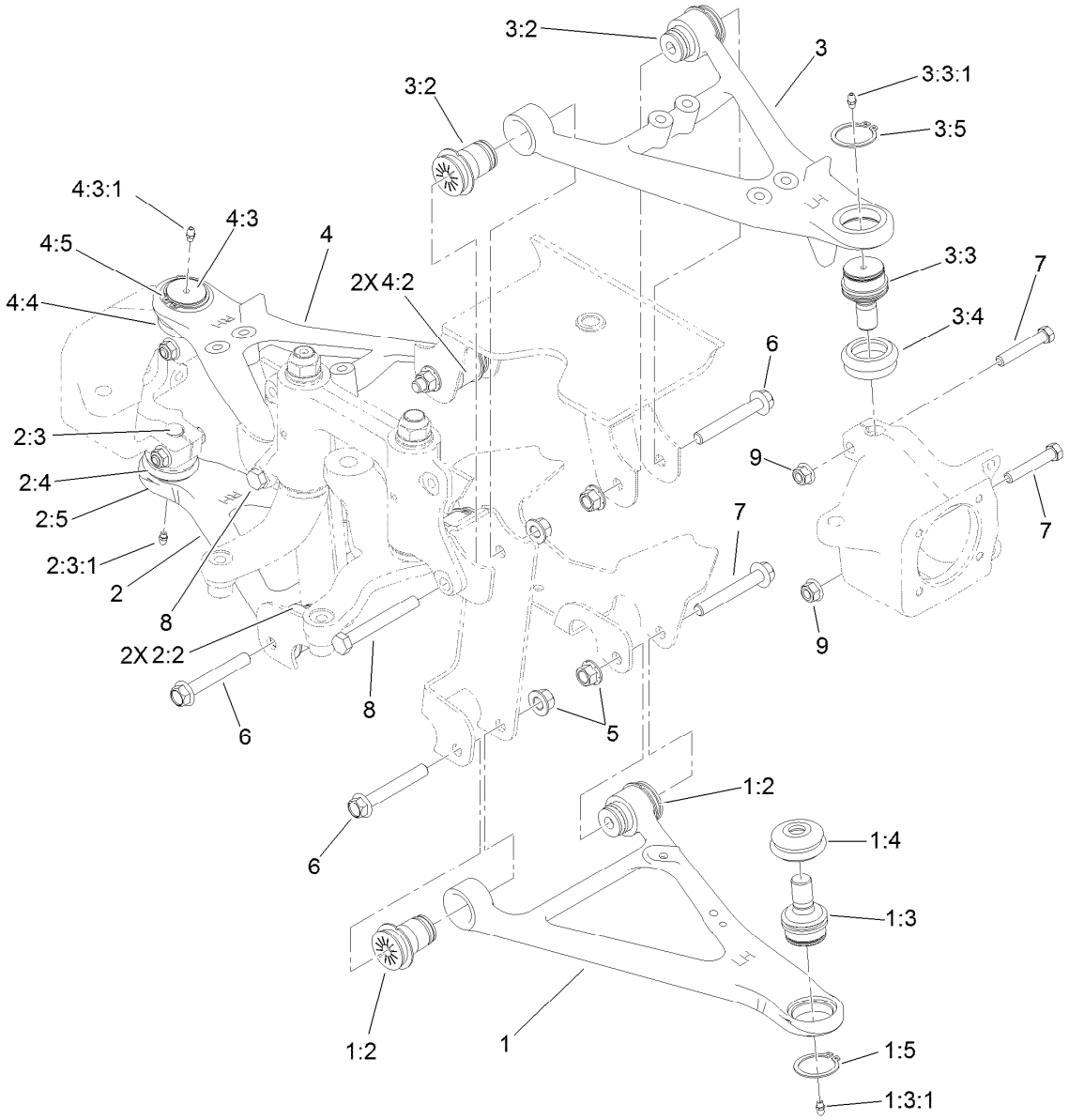

Front Control Arm Assembly

Ref.	Part Number	Qty.	Description
1	115-2405	1	Lower LH Control Arm ASM
1:2	87-1450	2	Bushing-Flange
1:3	115-2165	1	Ball Joint
1:3:1	302-5	1	Fitting-Grease
1:4	87-2420	1	Seal-Joint, Ball
1:5	32151-104	1	Ring-Retaining, External
2	115-2407	1	Lower RH Control Arm ASM
2:2	87-1450	2	Bushing-Flange
2:3	115-2165	1	Ball Joint
2:3:1	302-5	1	Fitting-Grease
2:4	87-2420	1	Seal-Joint, Ball
2:5	32151-104	1	Ring-Retaining, External
3	115-2404	1	Upper LH Control Arm ASM
3:2	87-1450	2	Bushing-Flange
3:3	115-2165	1	Ball Joint

Ref.	Part Number	Qty.	Description
3:3:1	302-5	1	Fitting-Grease
3:4	87-2420	1	Seal-Joint, Ball
3:5	32151-104	1	Ring-Retaining, External
4	115-2406	1	Upper RH Control Arm ASM
4:2	87-1450	2	Bushing-Flange
4:3	115-2165	1	Ball Joint
4:3:1	302-5	1	Fitting-Grease
4:4	87-2420	1	Seal-Joint, Ball
4:5	32151-104	1	Ring-Retaining, External
5	99-5107	8	Nut-Lock
6	114-8419	6	Screw-HHF
7	324-10	4	Screw-HH
8	325-17	2	Screw-HH
9	114-8417	4	Nut-HF, NI

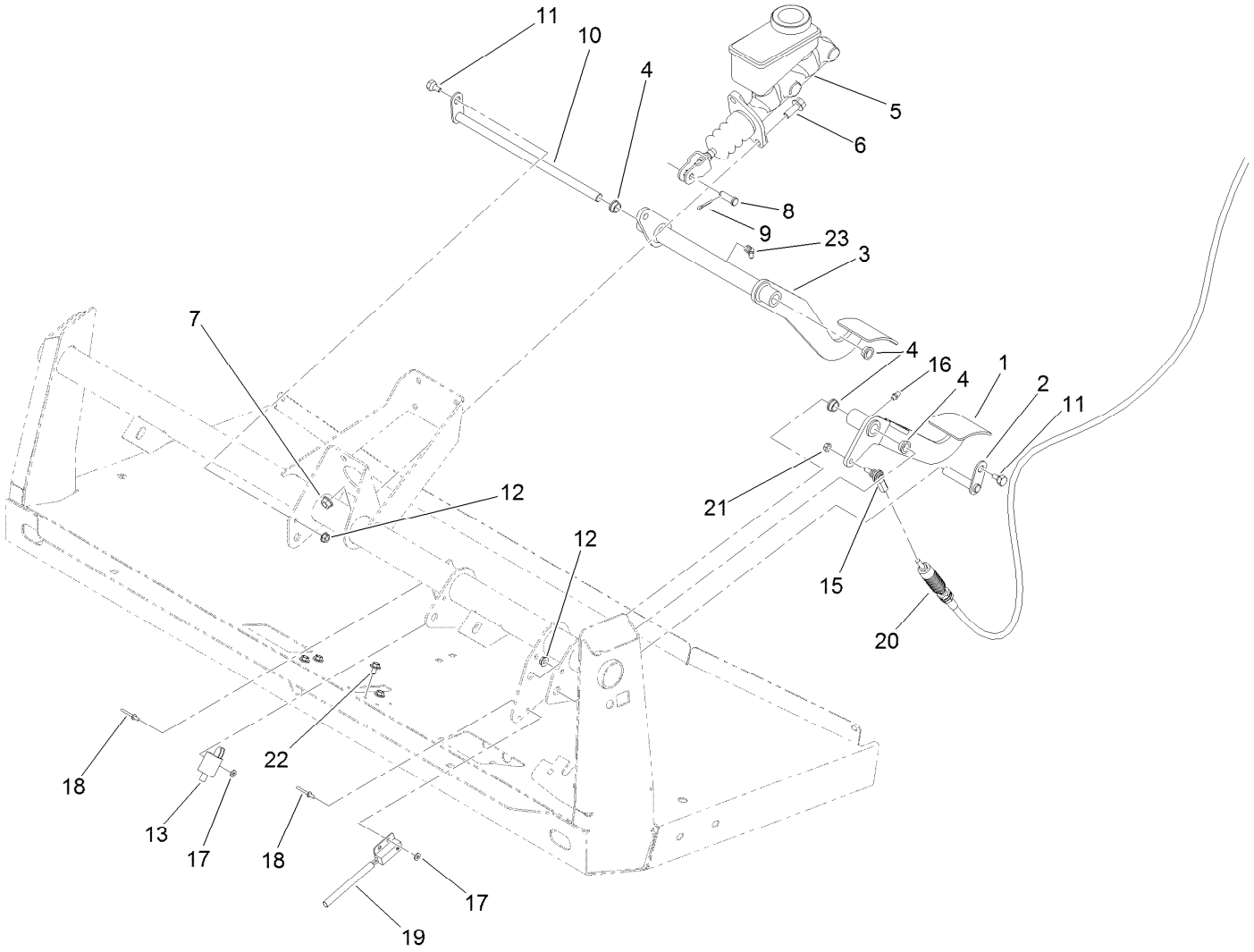

Brake and Clutch Pedal Assembly

Ref.	Part Number	Qty.	Description
1	127-7357-03	1	Pedal-Clutch
2	115-2269	1	Pin-Pivot
3	120-5023-03	1	Pedal-Brake
4	256-156	4	Bushing-Flange
5	104-6782	1	Master Cylinder ASM
6	3234-11	2	Screw-HHF
7	3290-357	2	Nut-HHF, Whiz
8	283-2	1	Pin-Clevis
9	3272-10	1	Pin-Cotter
10	137-6729	1	Shaft-Brake
11	63-3410	2	Screw-Shoulder

Ref.	Part Number	Qty.	Description
12	32128-33	2	Nut-HF
13	95-1653	1	Switch-Pole, Single
15	110-2554	1	Rod End-Spherical
16	302-5	1	Fitting-Grease
17	3256-21	4	Washer-Flat
18	3269-25	4	Rivet-Pop
19	105-0023	1	Switch-Proximity
20	115-2284	1	Cable-Clutch
21	3296-13	1	Nut-Lock, NI
22	46-6811	4	Screw-HWH
23	302-60	1	Fitting-Grease

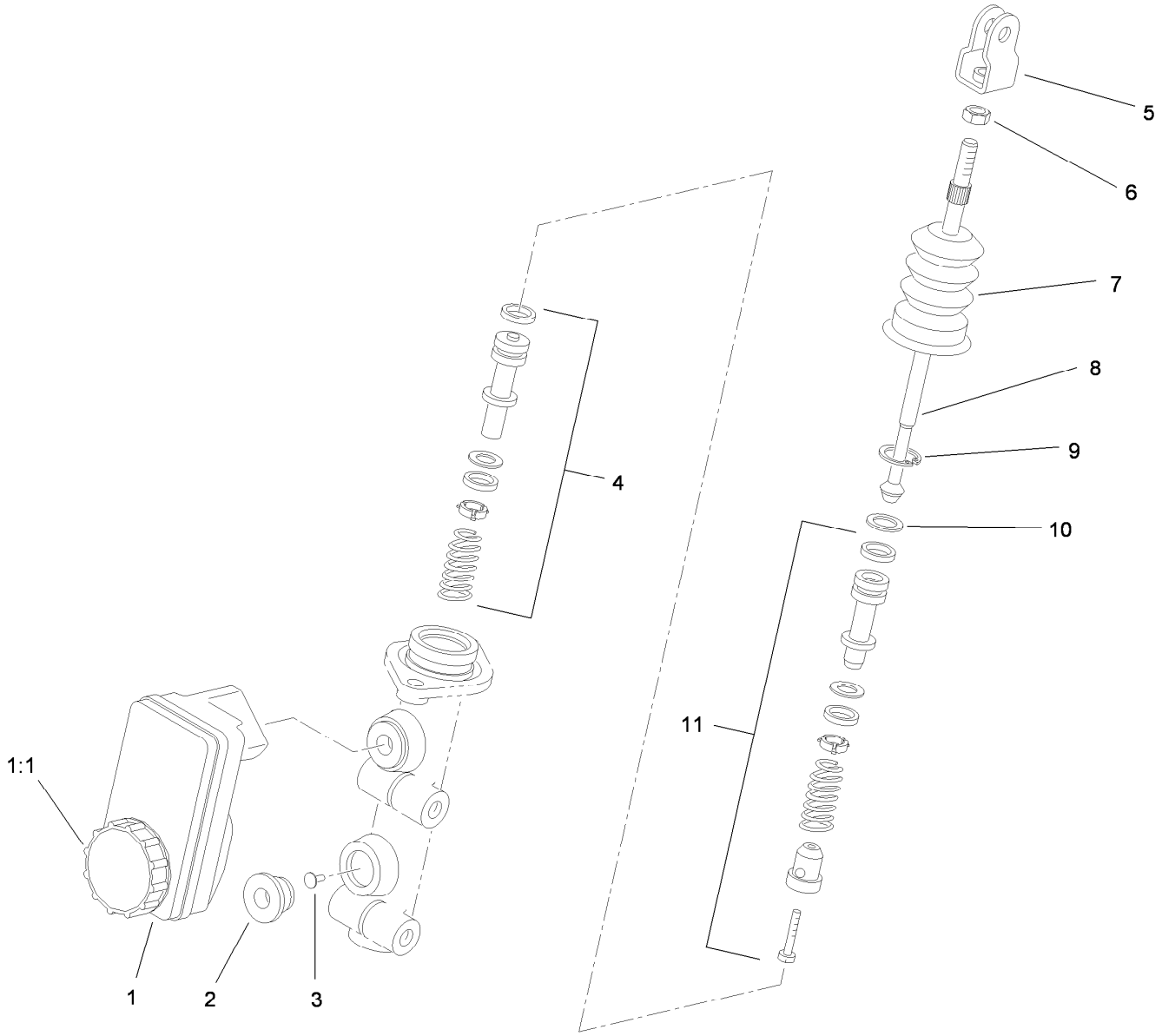

Master Cylinder Assembly No. 104-6782

Ref.	*Part Number*	*Qty.*	*Description*
1	104-6845	1	Reservoir ASM
1:1	92-4112	1	Cap ASM
2	93-8971	2	Seal-Port, Flange
3	92-4103	1	Pin-Stop
4	92-4102	1	Secondary Piston ASM
5	92-4110	1	Clevis
6	21-0360	1	Nut-Hex
7	94-5209	1	Cover-Dust
8	94-5210	1	Rod-Push
9	92-4109	1	Ring-Snap
10	92-4108	1	Retainer-Washer
11	92-4101	1	Primary Piston ASM

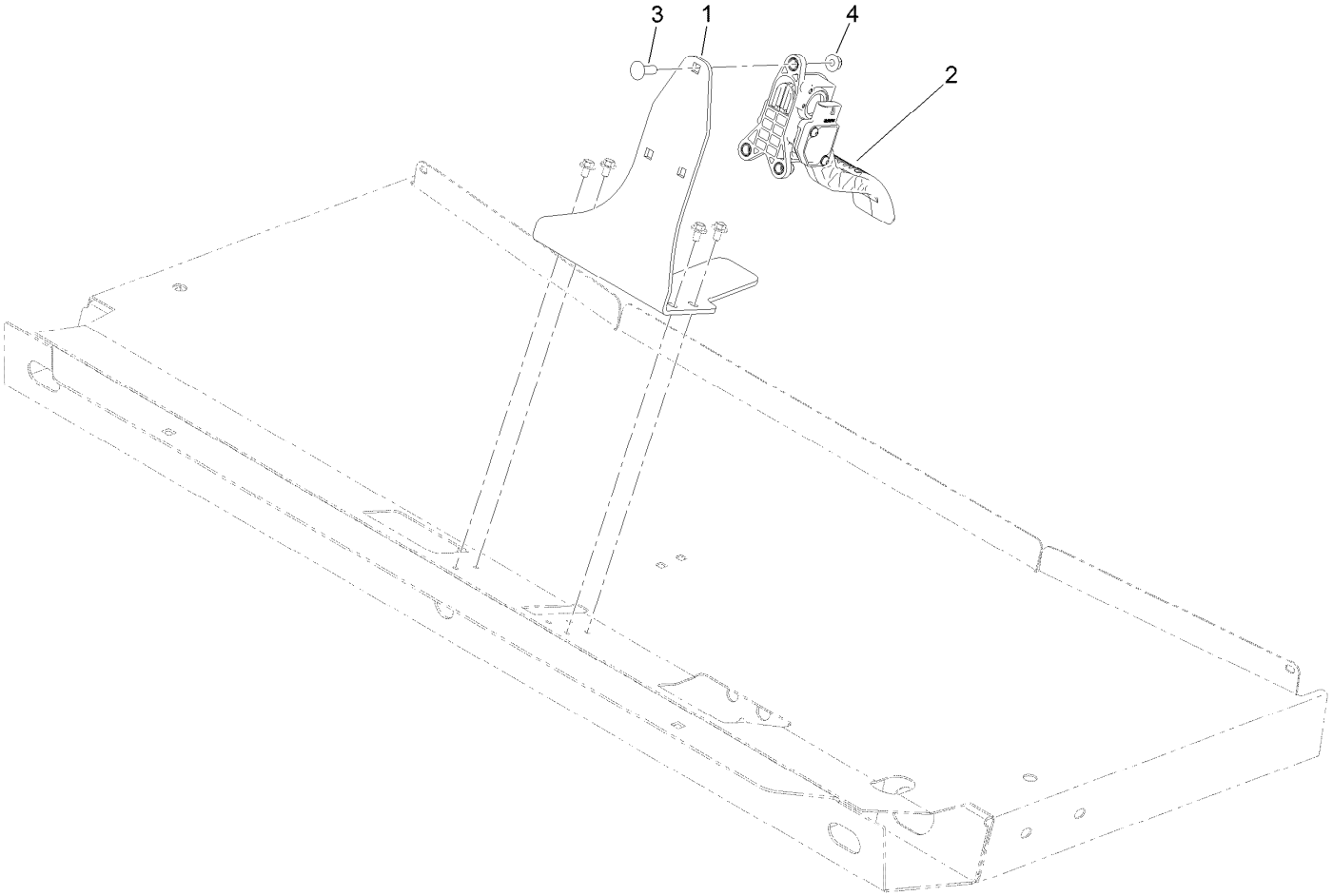

Accelerator Assembly

Ref.	Part Number	Qty.	Description
1	132-6711-03	1	Bracket-Mount, Pedal
2	121-9675	1	Pedal-Accelerator
3	3230-22	3	Screw-CARR
4	104-8300	3	Nut-HF, NI

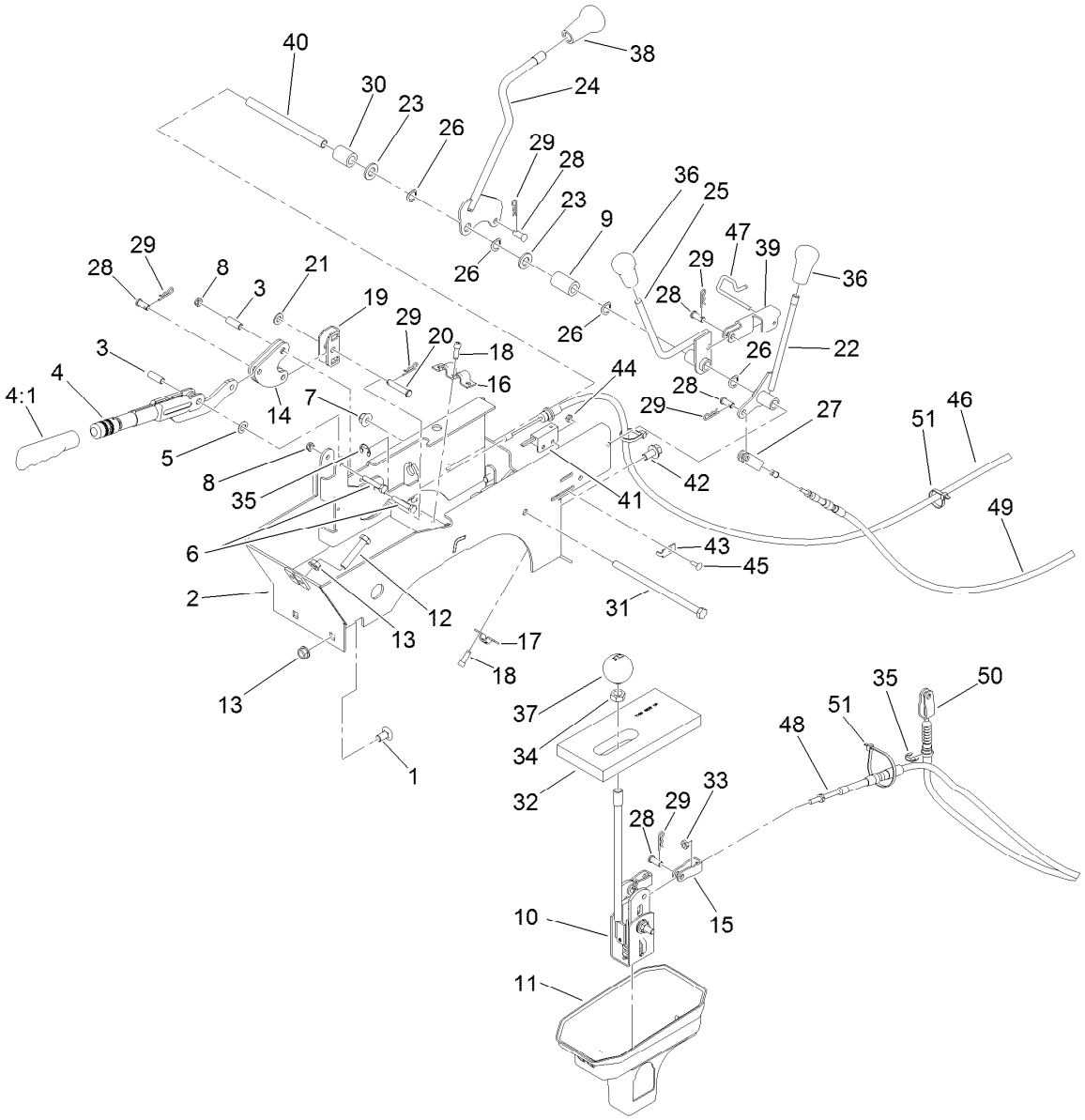

Console Assembly

Ref.	Part Number	Qty.	Description
1	3231-21	2	Screw-CARR
2	108-6914-03	1	Support-Lever
3	114402	2	Spacer
4	127-8863	1	Lever-Brake, Park
4:1	127-8864	1	Grip-Handle
5	3290-477	1	Washer-Curved
6	321-9	2	Screw-HH
7	104-8301	1	Nut-HF, NI
8	3296-56	2	Nut-Lock, NI
9	120-5037	1	Spacer
10	106-7887	1	Shift ASM
11	106-2376	1	Boot-Shift, Lower
12	323-10	2	Screw-HH
13	3290-357	4	Nut-HHF, Whiz
14	106-7814	2	Bellcrank
15	87-2310	2	Clevis-Cable
16	87-4960	1	Clamp-Cable
17	87-4340	1	Clamp-Cable
18	65-5221	5	Screw-Hshtf
19	87-3480	1	Bracket-Equalizer, Cable
20	94-3829	1	Pin-Clevis

Ref.	Part Number	Qty.	Description
21	3256-23	1	Washer-Plain
22	106-7828	1	Lever
23	33096-00	2	Washer-Flat
24	131-3479	1	Lever-Lock, Differential
25	106-7960	1	Lever-HYD
26	3290-221	4	Washer-Spring
27	87-7160	1	Clevis-Cable
28	283-62	6	Pin-Clevis
29	3290-307	7	Pin-Cotter
30	66-6501	1	Spacer-Wheel
31	323-36	1	Screw-HH
32	87-6570	1	Seal-Boot, Lower
33	3220-1	2	Nut-Jam
34	3218-18	1	Nut-Jam
35	32120-47	3	Ring-Retaining, External
36	106-7903	2	Knob-Control
37	87-6720	1	Knob-Shift
38	106-7952	1	Knob
39	115-2250	1	Link
40	106-7833	1	Spacer
41	100-1270	1	Switch-Proximity

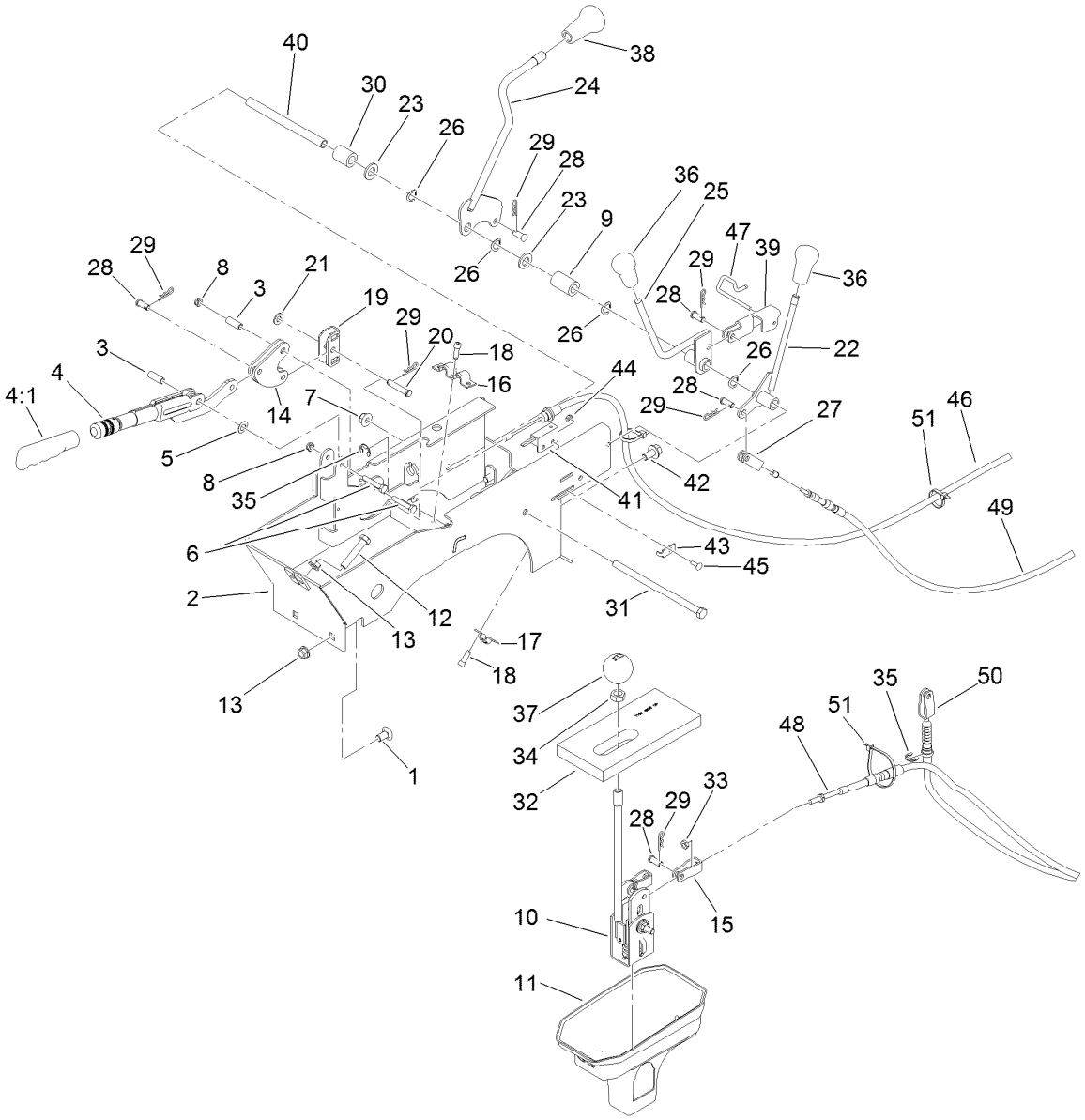

Console Assembly (continued)

Ref.	Part Number	Qty.	Description
42	3234-12	2	Screw-HHF
43	100-4872	1	Plate-Switch, Neutral
44	3296-12	1	Nut-Lock, NI
45	3229-34	1	Screw-CARR
46	115-2283	2	Cable-Brake, Park

Ref.	Part Number	Qty.	Description
47	115-2350	1	Pin-Retainer
48	121-6327	2	Cable-Selector, Gear
49	115-7812	1	Cable-Hi Low
50	115-2287	1	Cable-Lock, Differential
51	3290-379	5	Tie-Cable

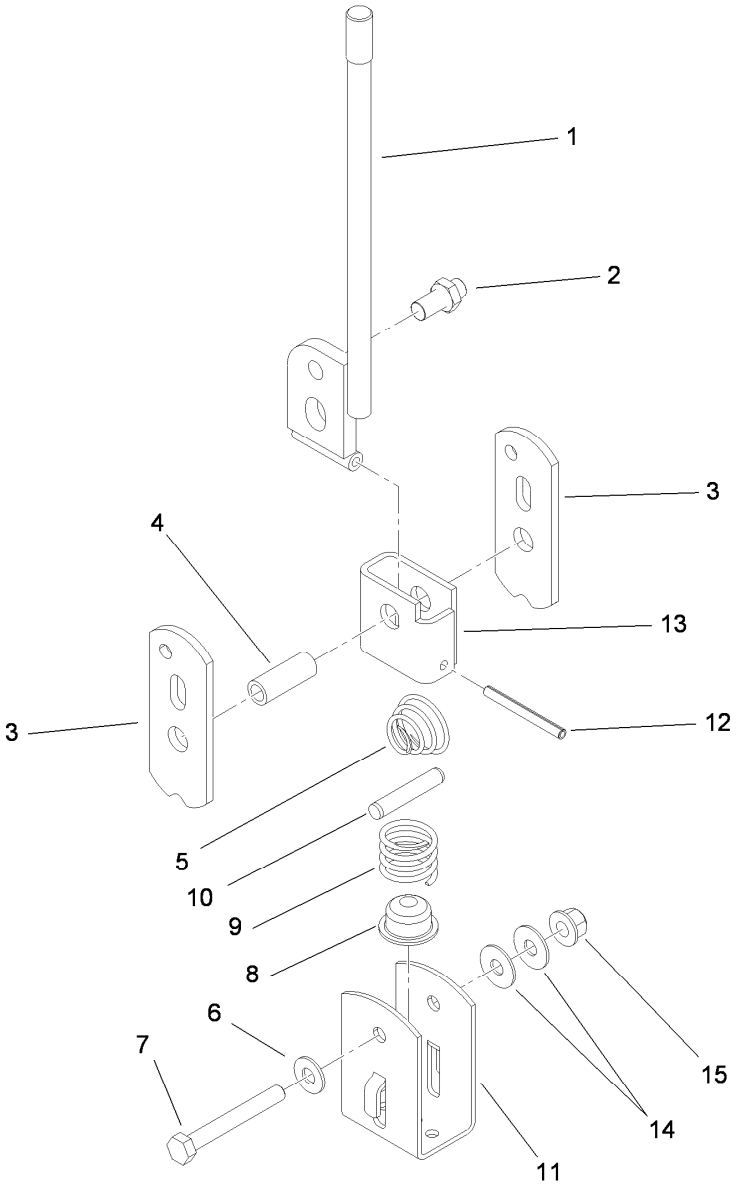

Shift Assembly No. 106-7887

Ref.	Part Number	Qty.	Description
1	131-3469	1	Lever-Shift
2	87-3650	1	Pin-Shift
3	87-3540	2	Link-Shift
4	87-2520	1	Tube-Pivot
5	87-2900	1	Spring-Compression
6	87-8640	1	Washer-Flat
7	322-12	1	Screw-HH
8	87-3530	1	Button-Shifter
9	87-3660	1	Spring-Compression
10	3290-507	1	Pin-Dowel
11	87-3520	1	Clevis
12	32121-48	1	Pin-Spring
13	87-6040	1	Bracket-Shifter
14	3290-456	2	Washer-Belleville
15	104-8300	1	Nut-HF, NI

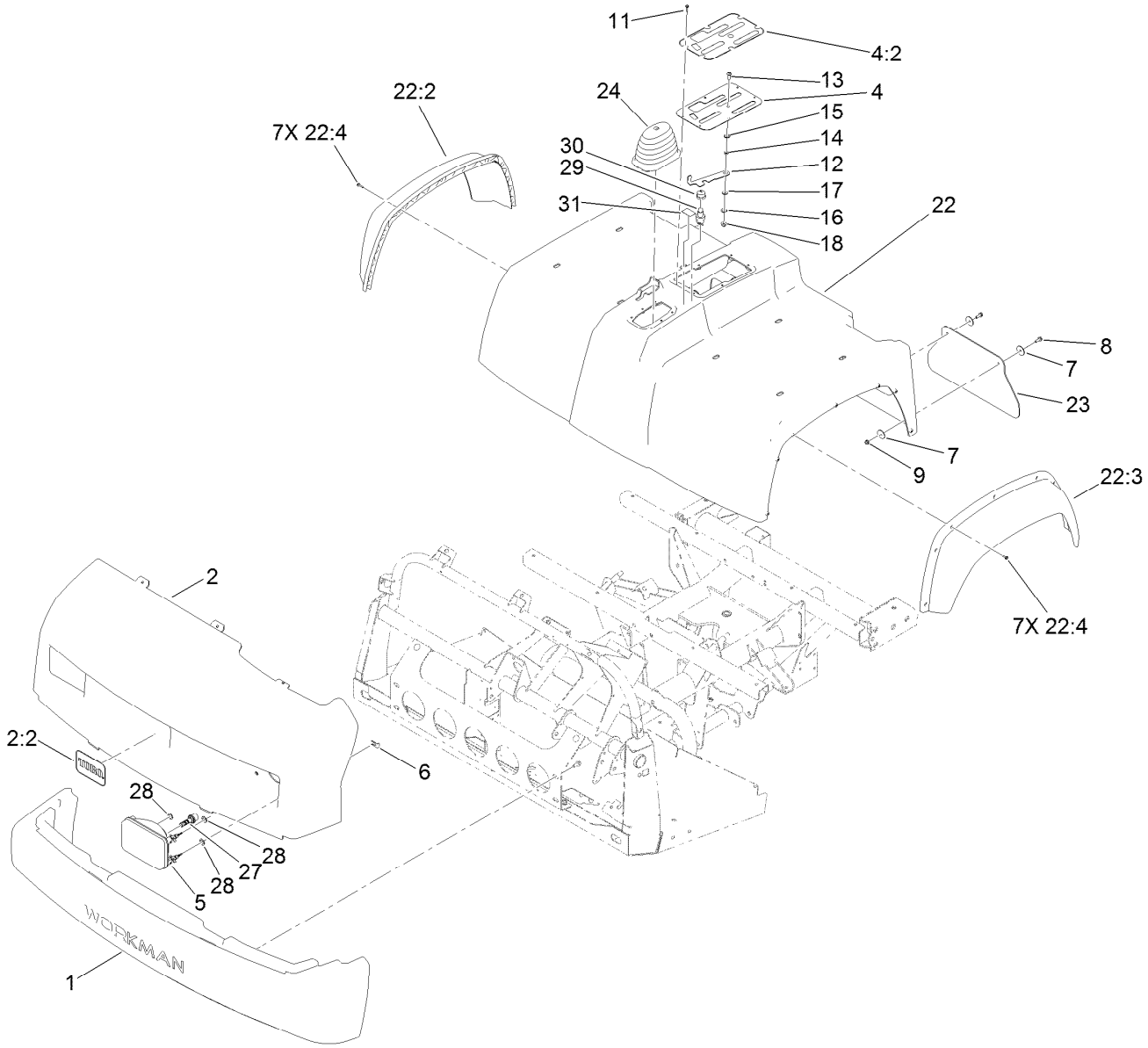

Bumper, Hood and Seat Base Assembly

Ref.	Part Number	Qty.	Description
1	112-3185	1	Bumper
2	139-3382	1	Hood ASM
2:2	117-4950	1	Decal
4	106-7886	1	Control Plate ASM
4:2	106-2377	1	Decal-Console
5	136-6318	2	Housing-Headlight, 12V
6	114-8341	6	Clip-Speed
7	3256-55	8	Washer-Flat
8	3234-4	4	Screw-HHF
9	104-7201	4	Nut-HF
11	98-1375	6	Screw-HWH
12	106-7984	1	Lever-Detent
13	3274-55	1	Screw-HSBH
14	82-4240	1	Spacer-Bearing
15	94-8196	1	Washer-Nylon

Ref.	Part Number	Qty.	Description
16	3290-221	1	Washer-Spring
17	3256-23	1	Washer-Plain
18	104-8300	1	Nut-HF, NI
22	133-0566	1	Seatbase ASM
22:2	114-8407	1	Fender-Front, RH
22:3	114-8408	1	Fender-Front, LH
22:4	117-5036	14	Screw-Plastic, HWH
23	106-2378	2	Mudflap
24	117-8063	1	Boot-Shift
27	133-0574	2	Bulb-LED
28	112-6957	6	Washer-Hardened
29	112-3324	1	Switch-Horn
30	112-3313	1	Nut-Weatherproof
31	137-9896	1	Decal-4X4 Enable

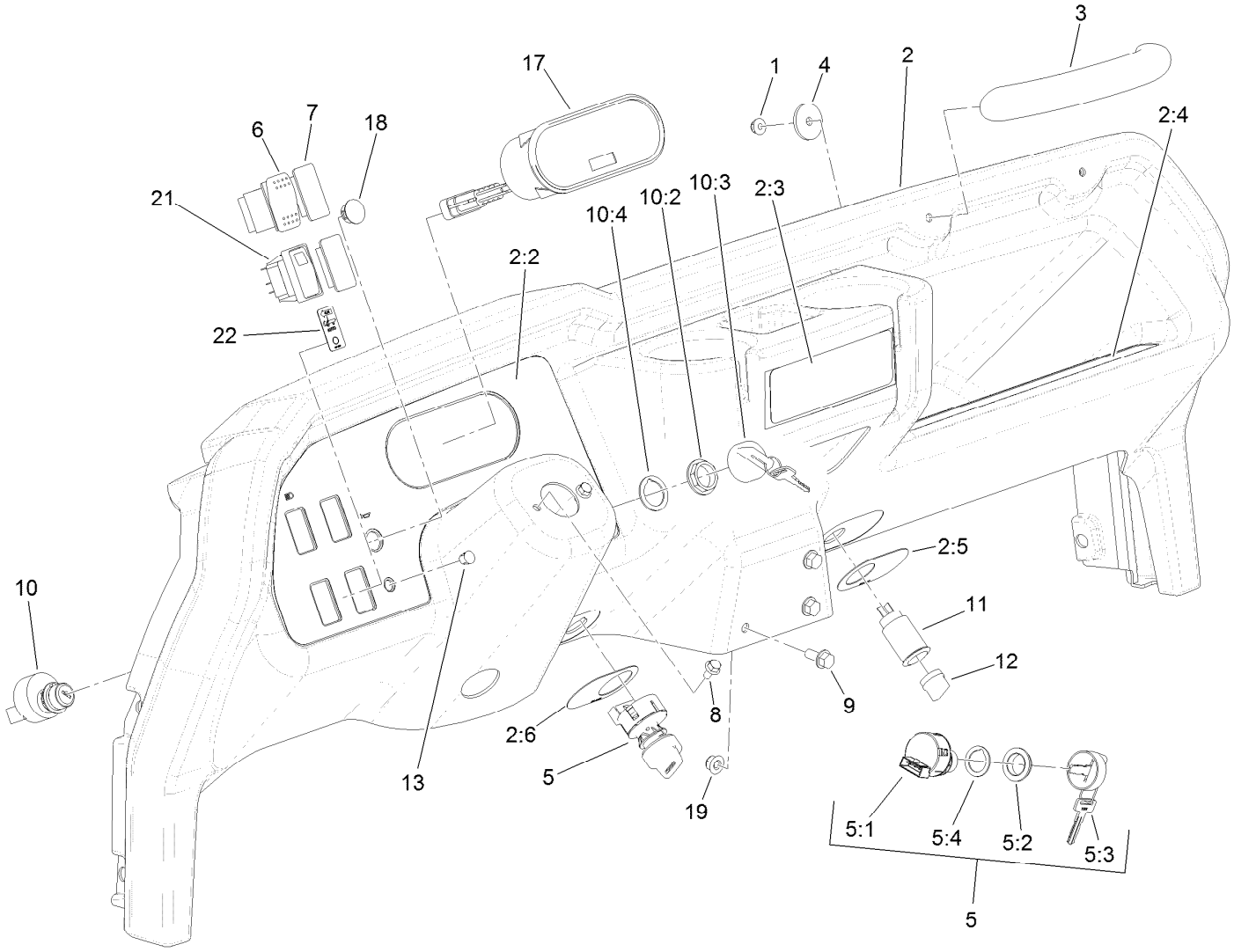

Dash Assembly

Ref.	Part Number	Qty.	Description
1	104-7201	2	Nut-HF
2	115-7912	1	Dash ASM
2:2	138-3523	1	Decal-Panel, Control
2:3	121-9776	1	Decal-Danger, Vehicle (CE)
2:4	115-2282	1	Decal-Warning, Dash
2:5	106-2353	1	Decal-Powerpoint
2:6	106-2355	1	Decal-Switch, Supervisor
3	117-4948	1	Handle-Grab
4	103995	2	Washer
5	110-2580	1	Switch-Key, Supervisor
5:1		1	Switch-Key ●
5:2	108-8660	1	Nut-Mounting
5:3	110-5221	1	Set-Key, Supervisor
5:4	108-8659	1	Washer-Backup
6	95-8999	1	Switch

Ref.	Part Number	Qty.	Description
7	99-7420	3	Plug-Hole
8	33103-012	2	Screw-HHF
9	3234-5	3	Screw-HHF
10	106-5269	1	Ignition Switch ASM
10:2	108-8660	1	Nut-Mounting
10:3	106-5270	1	Ignition Key Set
10:4	108-8659	1	Washer-Backup
11	99-7411	1	Point-Power
12	99-7416	1	Cap
13	104-9368	1	Plug-Dome
17	138-3564	1	Cluster-Instrument
18	94-5627	1	Plug
19	104-8300	3	Nut-HF, NI
21	104-9007	1	Switch-Rocker
22	137-9895	1	Decal-4Wd Auto

● Not serviced separately

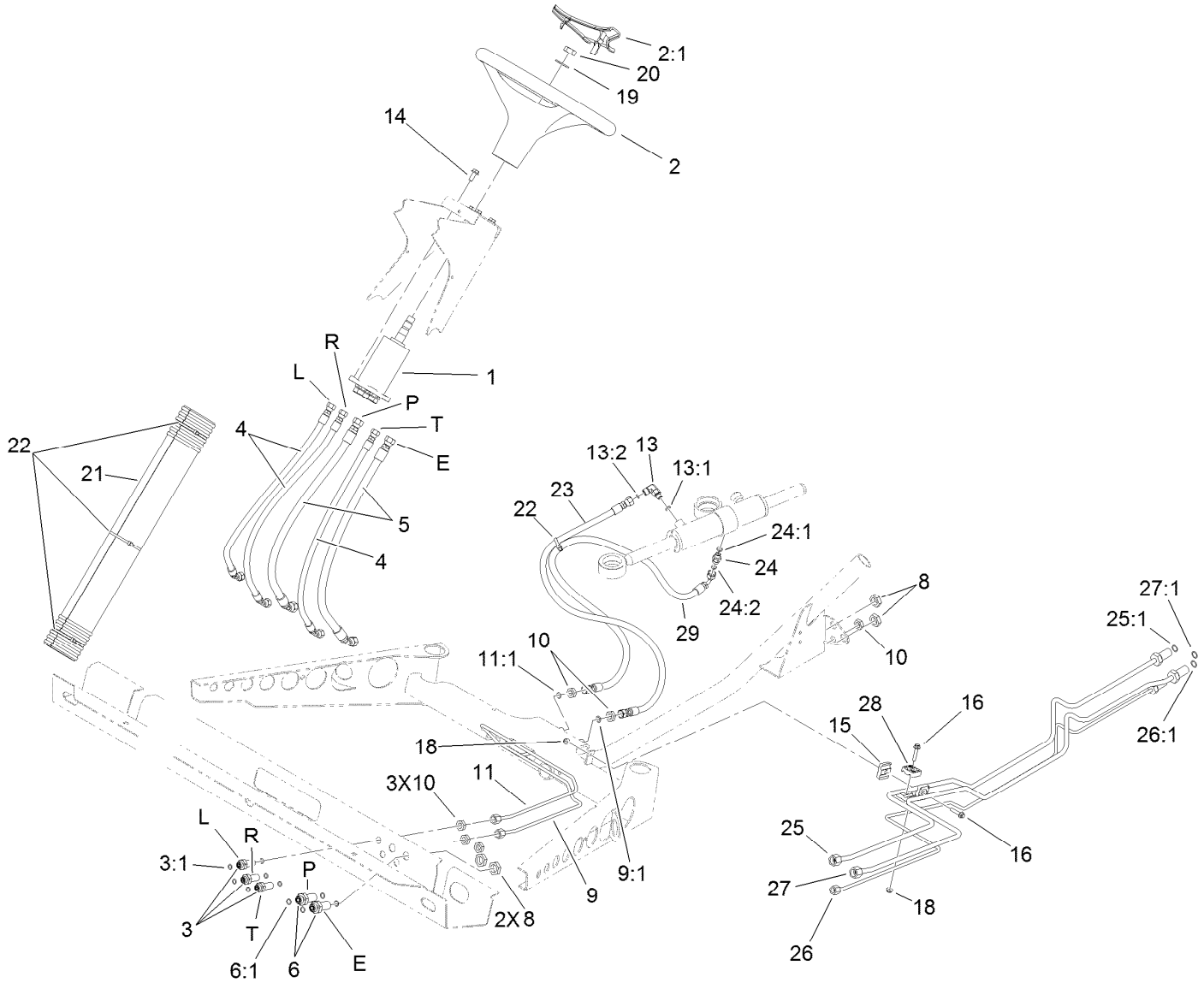

Steering Hydraulic Assembly

Ref.	Part Number	Qty.	Description
1	120-4813	1	Pump-Steering
2	98-1471	1	Wheel-Steering
2:1	98-1468	1	Cover-Wheel, Steering
3	94-1444	3	Union-Bulkhead
3:1	237-21	2	O-Ring
4	106-7974	3	Hose-HYD
5	106-7975	2	Hose-HYD
6	340-71	2	Fitting-Straight, Bulkhead
6:1	237-22	2	O-Ring
8	340-70	4	Nut-Lock
9	106-7804	1	Tube-HYD
9:1	237-21	1	O-Ring
10	3219-10	6	Nut-Hex
11	106-7806	1	Tube-HYD
11:1	237-21	1	O-Ring
13	340-132	1	Fitting-Elbow, 90 DEG
13:1	237-78	1	O-Ring
13:2	237-21	1	O-Ring
14	98-7977	4	Screw-HHF

Ref.	Part Number	Qty.	Description
15	106-7839	2	Clamp-Tube
16	3234-21	2	Screw-HHF
18	104-7201	2	Nut-HF
19	3256-27	1	Washer-Flat
20	3296-33	1	Nut-Lock, NI
21	106-6713	1	Cover-Lines, Steering
22	3290-379	4	Tie-Cable
23	108-6505	1	Hose-HYD
24	340-92	1	Fitting-Straight
24:1	237-78	1	O-Ring
24:2	237-21	1	O-Ring
25	115-7701	1	Tube-HYD
25:1	237-22	1	O-Ring
26	115-7702	1	Tube-HYD
26:1	237-22	1	O-Ring
27	115-7703	1	Tube-HYD
27:1	237-21	1	O-Ring
28	56-7973	2	Clamp-Tube
29	117-4861	1	Hose-HYD

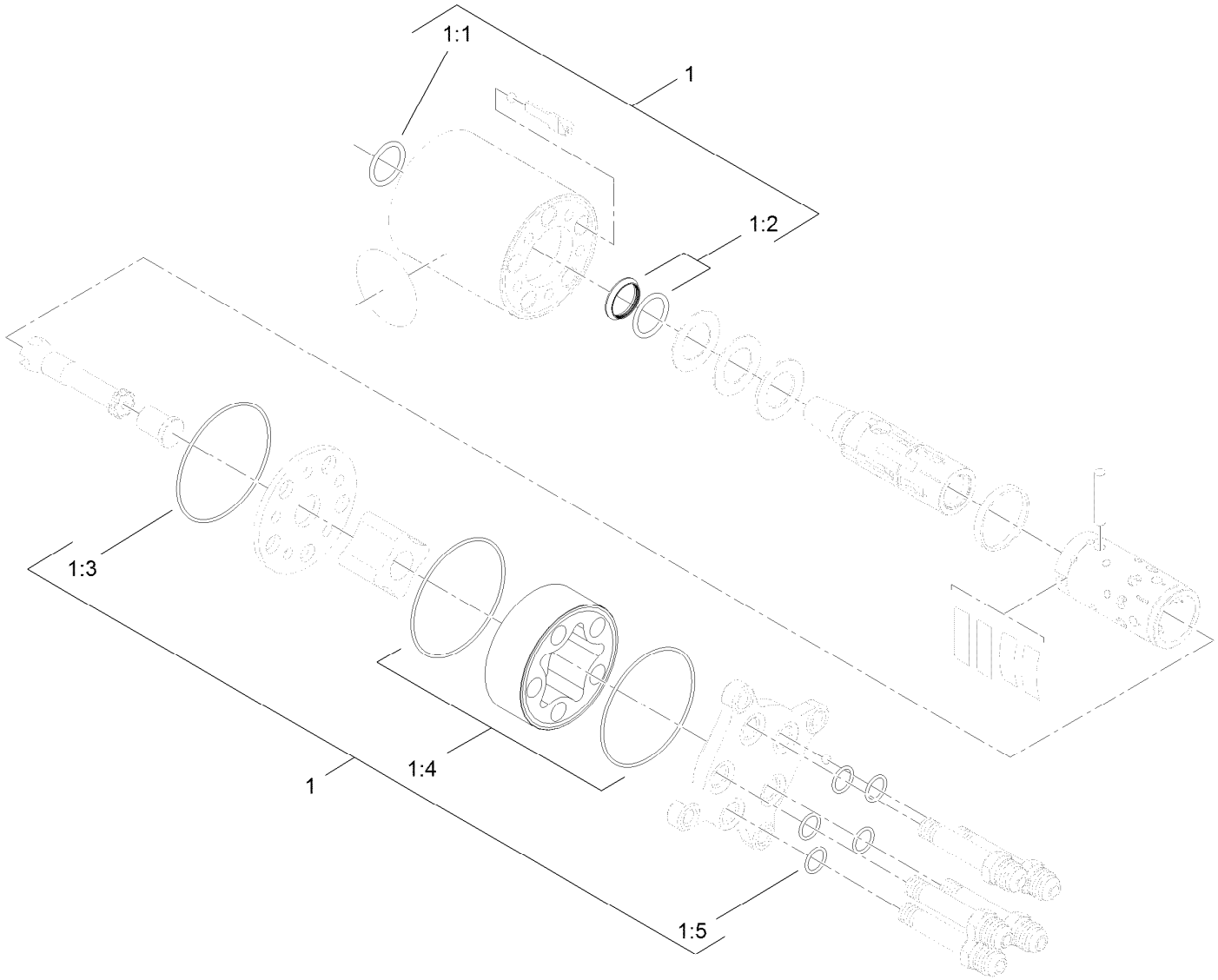

Steering Valve Assembly No. 120-4813

Ref.	*Part Number*	*Qty.*	*Description*
1	106-6716	1	Seal Kit
1:1		1	Ring-Seal, Dust ●
1:2		1	Seal-Shaft ●
1:3		1	O-Ring ●
1:4		2	O-Ring ●
1:5		5	O-Ring ●

● Not serviced separately

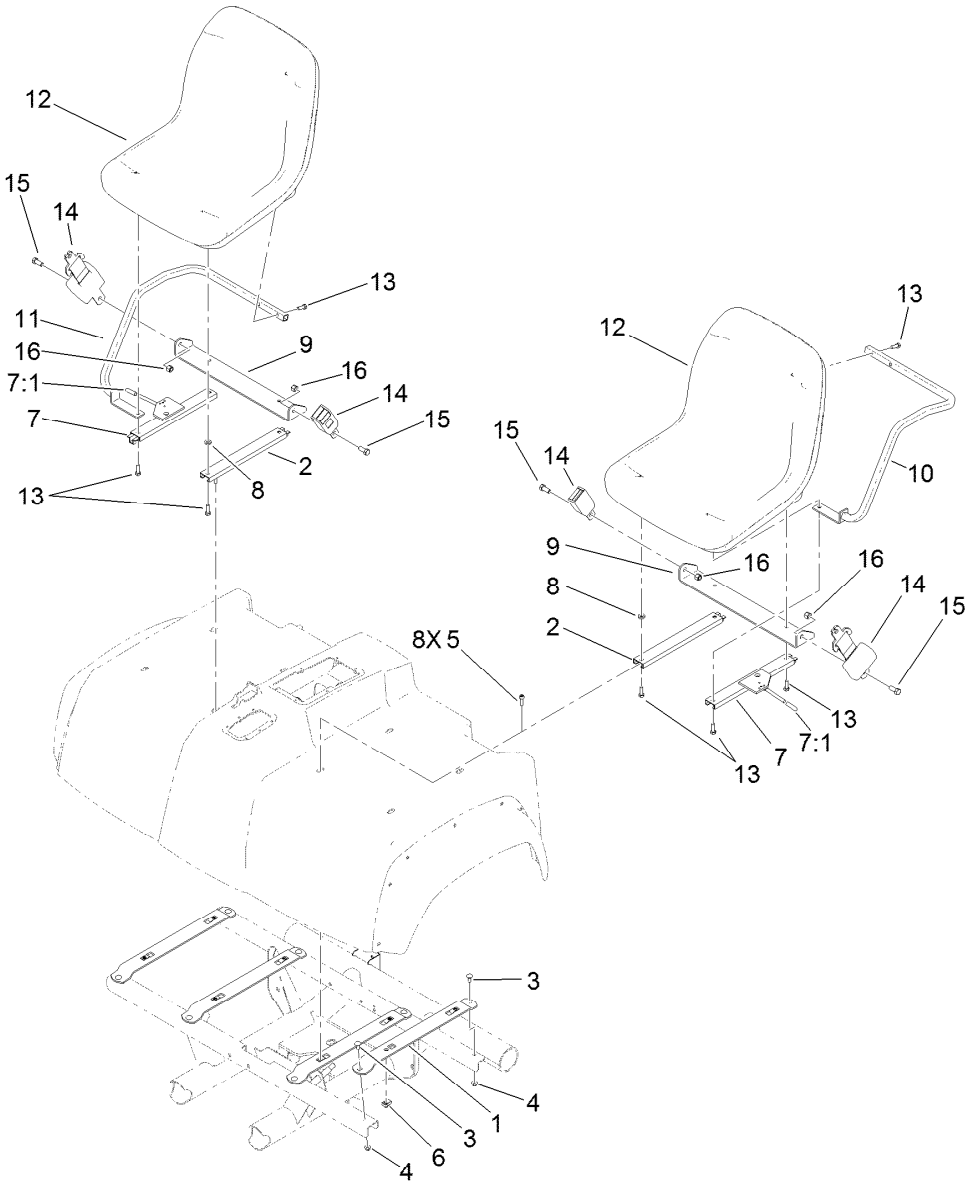

Seat Assembly

Ref.	Part Number	Qty.	Description
1	115-2435-03	4	Bracket-Seat
2	119-0655	2	Adjuster-Seat, Non Locking
3	3230-1	8	Bolt-CARR
4	104-8300	8	Nut-HF, NI
5	3274-22	8	Screw-HSH
6	115-7721	8	Nut-Clip, U
7	121-9763	2	Adjuster-Seat, Locking
7:1	2410-49	1	Cap-Vinyl
8	104-7658	2	Spacer

Ref.	Part Number	Qty.	Description
9	119-0727-03	2	Bracket-Belt, Seat
10	119-0731-03	1	Armrest-LH
11	119-0732-03	1	Armrest-RH
12	133-0577	2	Seat ASM
13	33114-030	12	Screw-HH
14	110-0413	2	Seatbelt-Retractable
15	3212-4	4	Screw-HH
16	3296-7	4	Nut-Lock

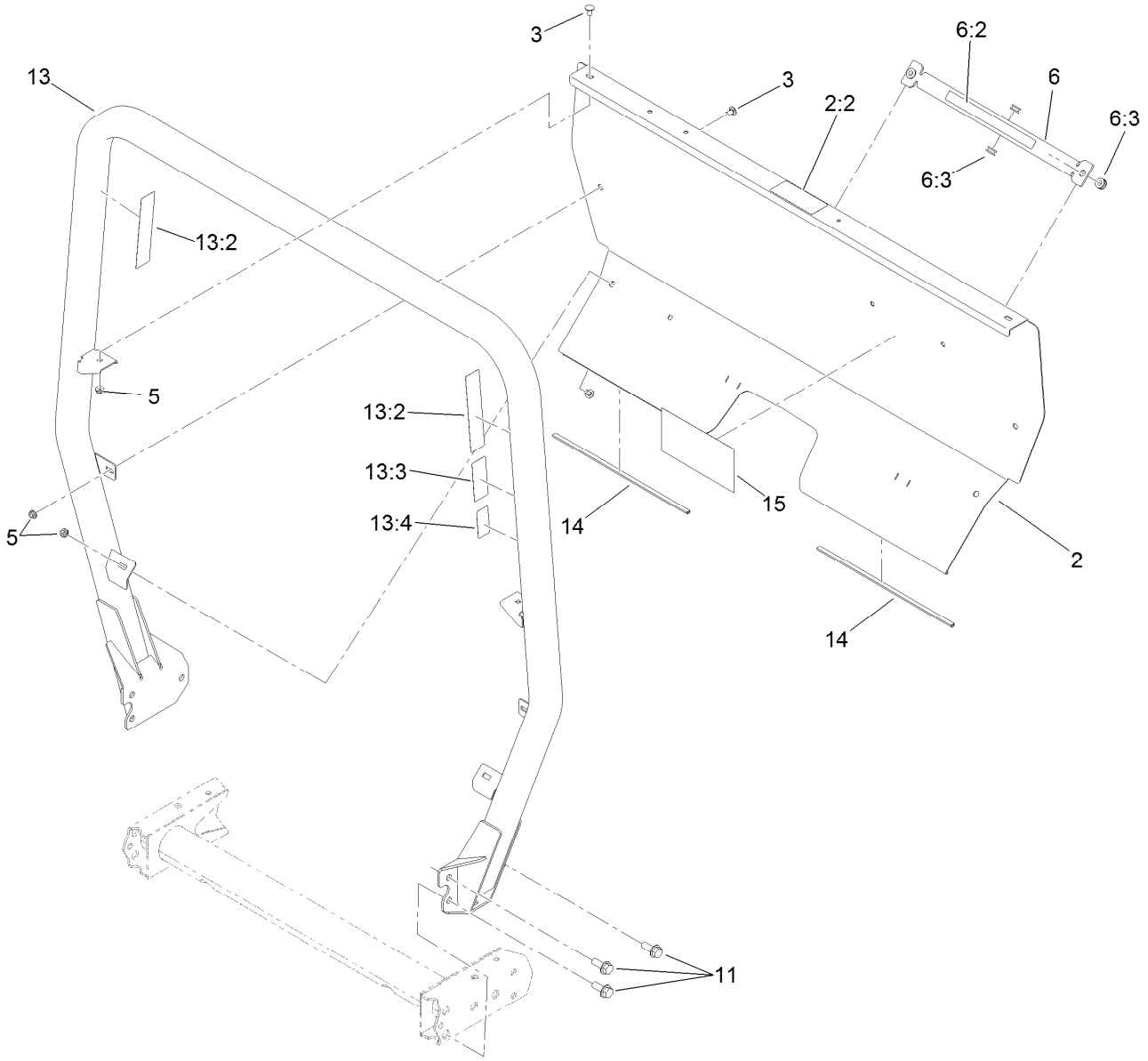

Roll-Over Protection System Assembly

Ref.	Part Number	Qty.	Description
2	115-2213	1	ROPS Cover ASM
2:2	105-4215	1	Decal-Caution
3	3230-18	6	Screw-CARR
5	32128-20	6	Nut-HF
6	105-7960	1	Bed Support ASM
6:2	93-9852	1	Decal-Warning
6:3	92-5972	4	Grommet-Rubber
11	3234-38	6	Screw-HHF
13	115-7910	1	ROPS ASM
13:2	106-7767	2	Decal-ROPS
13:3	93-9850	1	Decal-ROPS, CE
13:4	117-4969	1	Decal-ROPS, ISO
14	127-7382	2	Seal-ROPS
15	115-7814	1	Decal-Reference, Quick

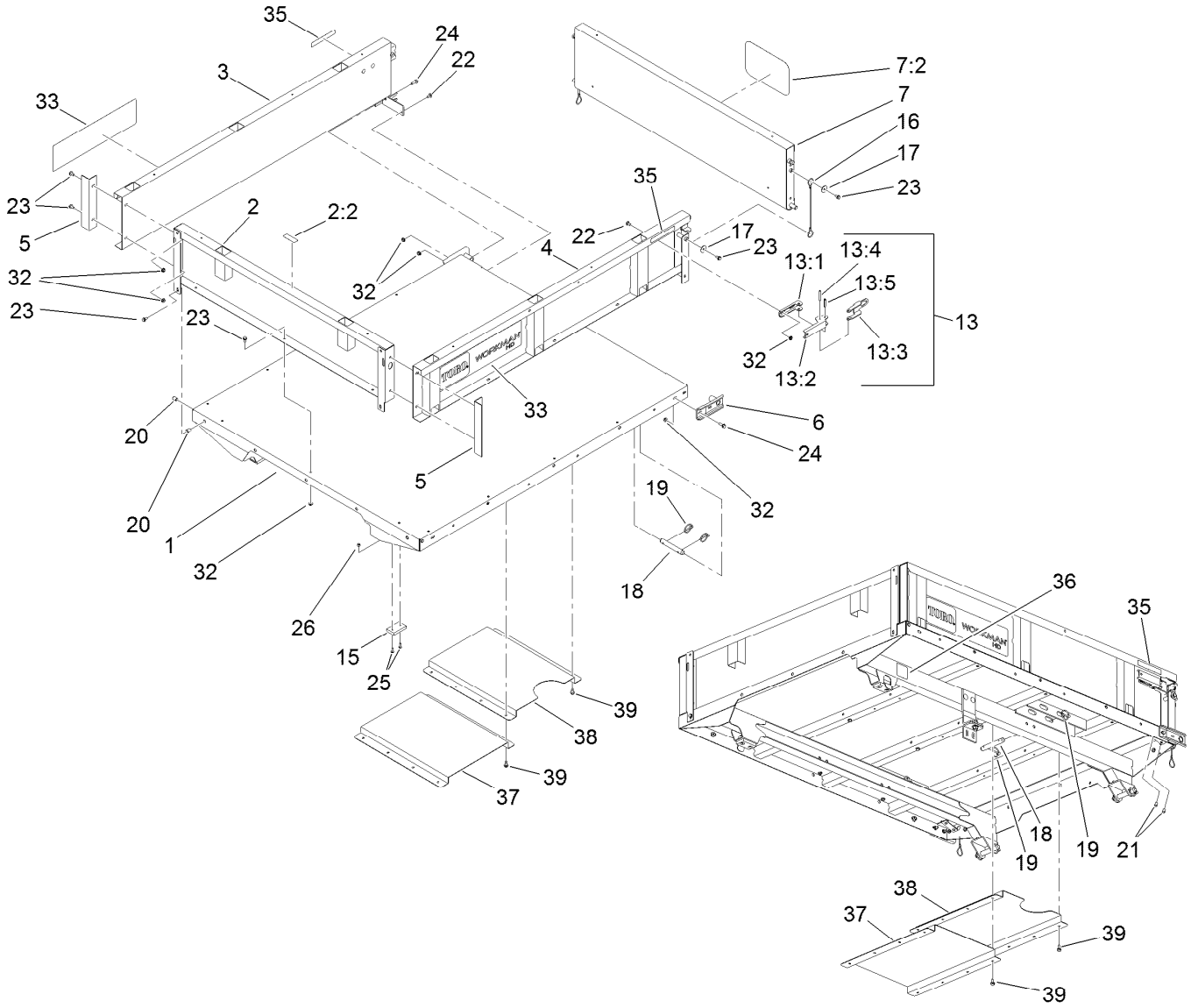

Full Bed and Side Panel Assembly

Ref.	Part Number	Qty.	Description
1	138-5675-03	1	Flatbed
2	133-0645	1	Front Panel ASM
2:2	115-7739	1	Decal-No Riders
3	133-0617	1	Panel-Side, RH
4	133-0616	1	Panel-Side, LH
5	92-1320-03	2	Angle-Side
6	92-1265-03	2	Bracket-Pivot
7	133-0644	1	Tailgate
7:2	105-4222	1	Decal
13	99-1123	2	Latch ASM
13:1	92-1271	1	Pivot-Latch
13:2	99-1113	1	Handle-Latch
13:3	99-1112	1	Plate-Retainer
13:4	32121-78	1	Pin-Roll
13:5	32121-25	1	Pin-Roll
15	93-9719	2	Block-Wear
16	93-9595	2	Lanyard

Ref.	Part Number	Qty.	Description
17	3256-57	4	Washer-Flat
18	92-1233	4	Pin-Clevis
19	92-1298	8	Pin-Lynch
20	32148-7	4	Nut-Clinch
21	32148-6	4	Nut-Clinch
22	3230-18	6	Screw-CARR
23	3234-7	21	Screw-HHF
24	3234-29	6	Screw-HHF
25	3250-45	4	Screw-SPH
26	3296-42	4	Nut-Lock, NI
32	32128-20	27	Nut-HF
33	115-7916	2	Decal
35	93-9868	2	Decal-Caution
36	93-9899	2	Decal-Warning
37	121-6300	1	Shield-Heat, Bed (Front)
38	121-6301	1	Shield-Heat, Bed (Rear)
39	32144-70	12	Screw-HWHTF

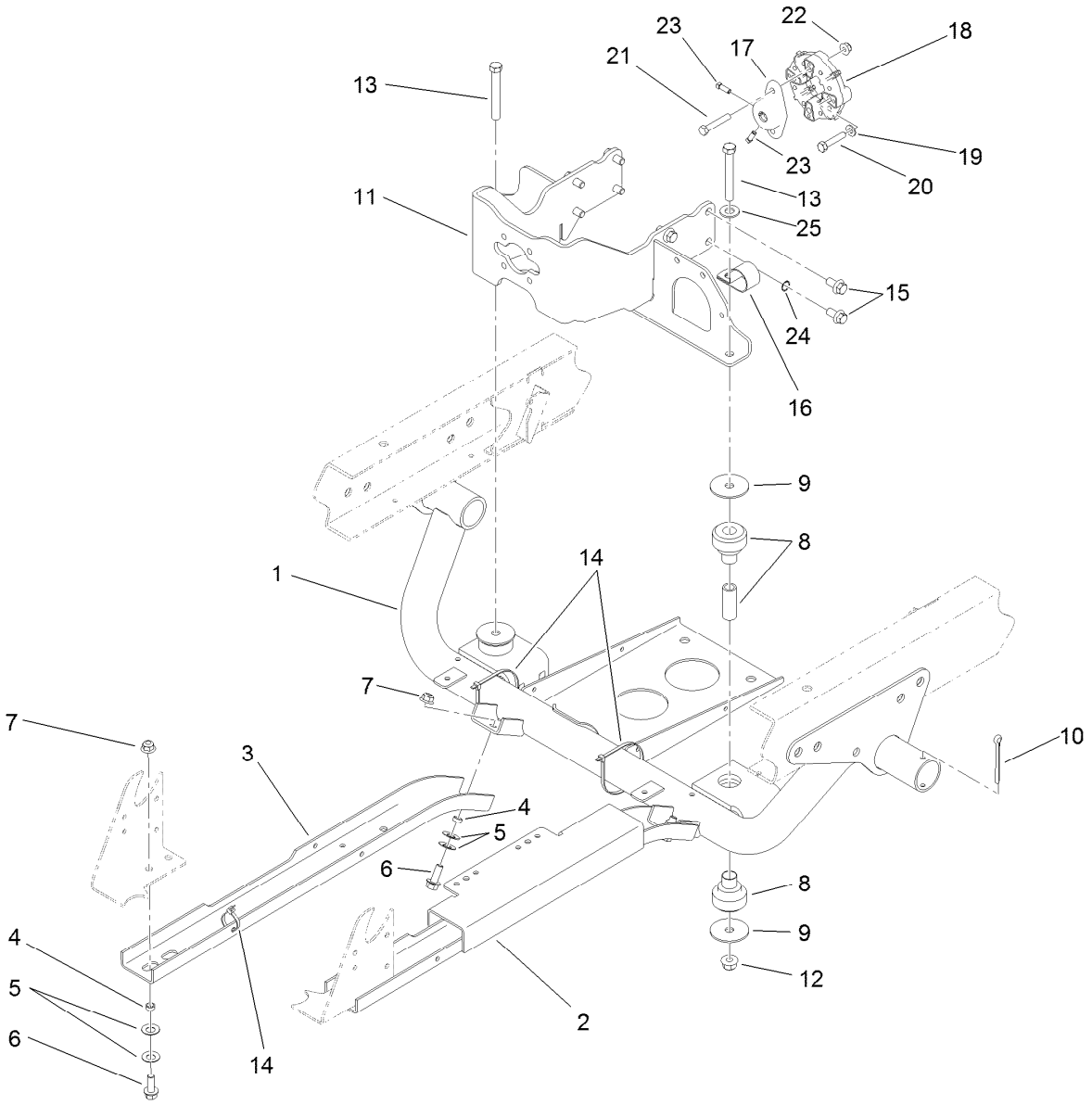

Engine Sub Frame Assembly

Ref.	Part Number	Qty.	Description
1	119-9679-03	1	Support-Engine
2	115-2215-03	1	Guard-LH
3	87-4730-03	1	Guard-Belly
4	76-9100	6	Spacer
5	3290-413	12	Washer-Belleville
6	3234-11	6	Screw-HHF
7	104-8301	6	Nut-HF, NI
8	106-7865	2	Mount-Engine
9	87-5100	4	Washer-Snubbing
10	3272-37	2	Pin-Cotter
11	121-6259-03	1	Mount-Pump, Engine
12	114-8417	2	Nut-HF, NI
13	324-13	2	Screw-HH

Ref.	Part Number	Qty.	Description
14	3290-379	4	Tie-Cable
15	120-4839	8	Screw-HHF
16	2412-82	1	Clamp-R
17	115-2169	1	Hub-Pump
18	119-0652	1	Coupler-Rubber
19	3256-23	2	Washer-Plain
20	33114-040	2	Screw-HH
21	322-21	2	Screw-HH
22	104-8300	2	Nut-HF, NI
23	3241-6	2	Screw-SQH
24	3254-20	1	Washer-Lock, Int
25	3256-26	1	Washer-Flat

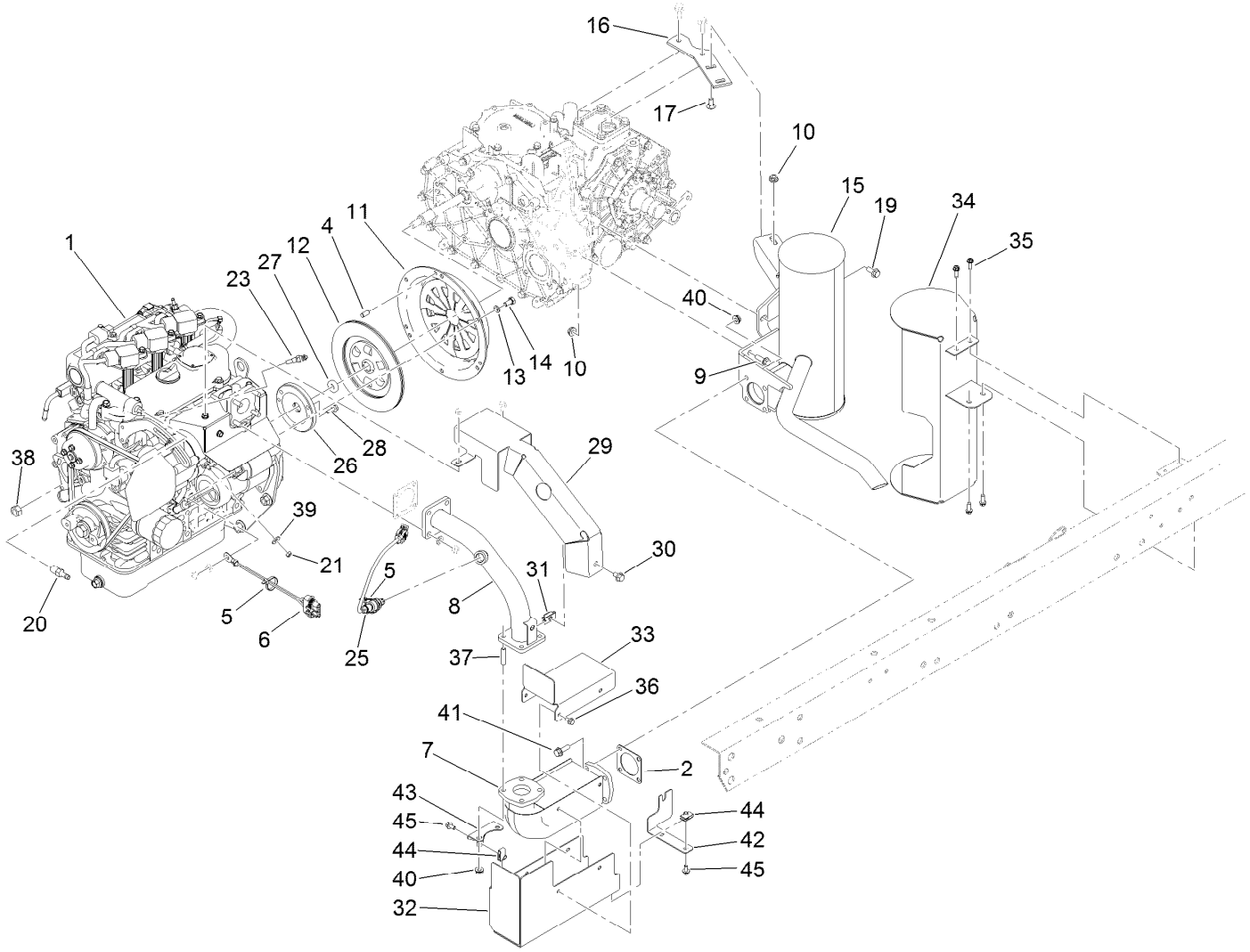

Engine and Exhaust Assembly

Ref.	Part Number	Qty.	Description
1	120-4880	1	Engine ASM
2	105-4209	1	Gasket-Muffler
4	42-7160	3	Pin
5	3290-379	2	Tie-Cable
6	99-3441	1	Harness-Wire, Fusible Link
7	125-9118	1	Converter-Catalytic (F/W Engine)
8	121-6291	1	Pipe-Exhaust
9	3234-17	2	Screw-HHF
10	32128-20	4	Nut-HF
11	87-4690	1	Cover-Clutch
12	87-4700	1	Disc-Clutch
13	3253-4	6	Washer-Lock
14	33114-016	6	Screw-HH
15	133-0613	1	Muffler
16	105-9472	1	Plate-Mount, Muffler
17	3230-2	2	Bolt-CARR
19	98-7977	1	Screw-HHF
20	115-1448	1	Fitting-Straight
21	33013-00	1	Nut-Hex
23	120-5075	1	Sender-Temperature
25	121-3511	1	Sensor-O2 F/W
26	120-5006	1	Holder-Bearing, Pilot
27	115-6870	1	Bearing-Ball, Sealed
28	33103-020	3	Screw-HHF
29	121-6305	1	Shield-Exhaust
30	3234-30	1	Screw-HHF
31	110-3510	1	Nut-Retainer
32	121-6307	1	Shield-Heat, Lower
33	121-6308	1	Shield-Heat, Upper
34	121-6302	1	Shield-Heat, Muffler
35	49-2040	4	Screw-HWHTF
36	33103-012	4	Screw-HHF
37	121-6289	4	Stud-Exhaust
38	110-8815	1	Nut-Hex
39	3256-2	1	Washer-Flat
40	121-6322	8	Nut-HF, Serrated
41	121-6324	4	Screw-HHF
42	121-6328	1	Mount-Muffler, Heat Shield
43	121-6329	1	Mount-Muffler, Heat Shield
44	107069	3	Clip
45	3234-13	3	Screw-HHF

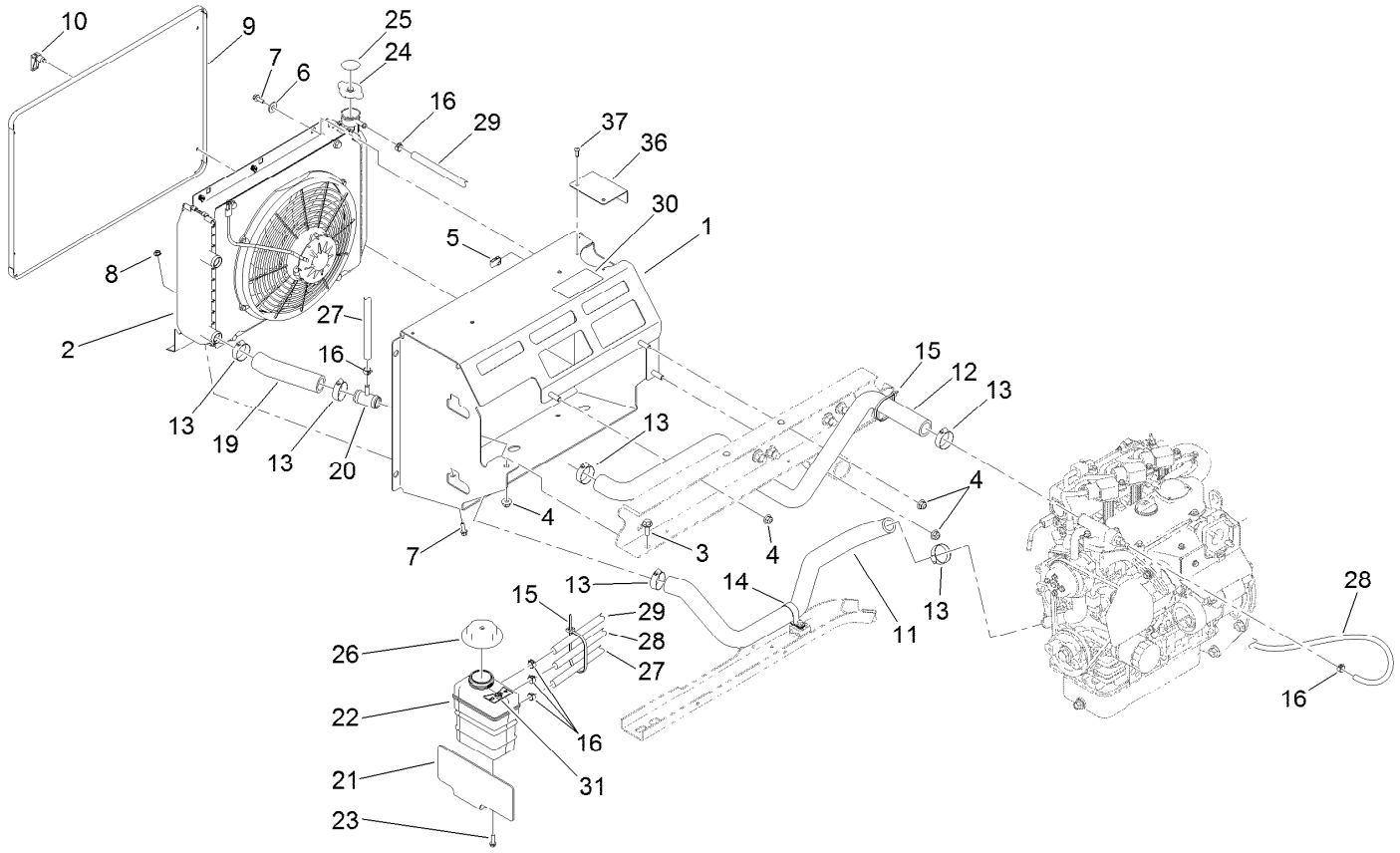

Cooling System Assembly

Ref.	Part Number	Qty.	Description
1	115-2434	1	Mount-Radiator
2		1	Radiator ASM ●
3	3234-11	1	Screw-HHF
4	104-8301	4	Nut-HF, NI
5	107069	2	Clip
6	3256-3	2	Washer-Flat
7	3234-4	4	Screw-HHF
8	32128-33	2	Nut-HF
9	115-2428-03	1	Screen-Radiator
10	74-5950	4	Latch-Swell
11	119-9487	1	Hose-Coolant, Lower
12	119-9486	1	Hose-Coolant, Upper
13	2412-34	6	Clamp-Hose
14	2412-74	1	R-Clamp
15	3290-379	4	Tie-Cable
16	92-2379	6	Clamp-Hose

Ref.	Part Number	Qty.	Description
19	120-4905	1	Hose-Coolant, Lower
20	120-4851	1	Tee
21	120-4906-03	1	Plate-Mount, Tank
22	120-4856	1	Tank-Surge
23	46-8091	2	Screw-HWH
24	120-4866	1	Cap-System, Cooling
25	106-6755	1	Decal-Cap, Radiator
26	120-4867	1	Cap-Coolant, Threaded (15 PSI)
27	120-5019	1	Hose-Coolant
28	120-5020	1	Hose-Coolant
29	120-5021	1	Hose-Coolant
30	121-6286	1	Decal-Fill, Radiator
31	121-6287	1	Decal-Tank, Overflow
36	136-6288	1	Cover-Cap, Radiator
37	63-8590	2	Screw

● Not serviced separately

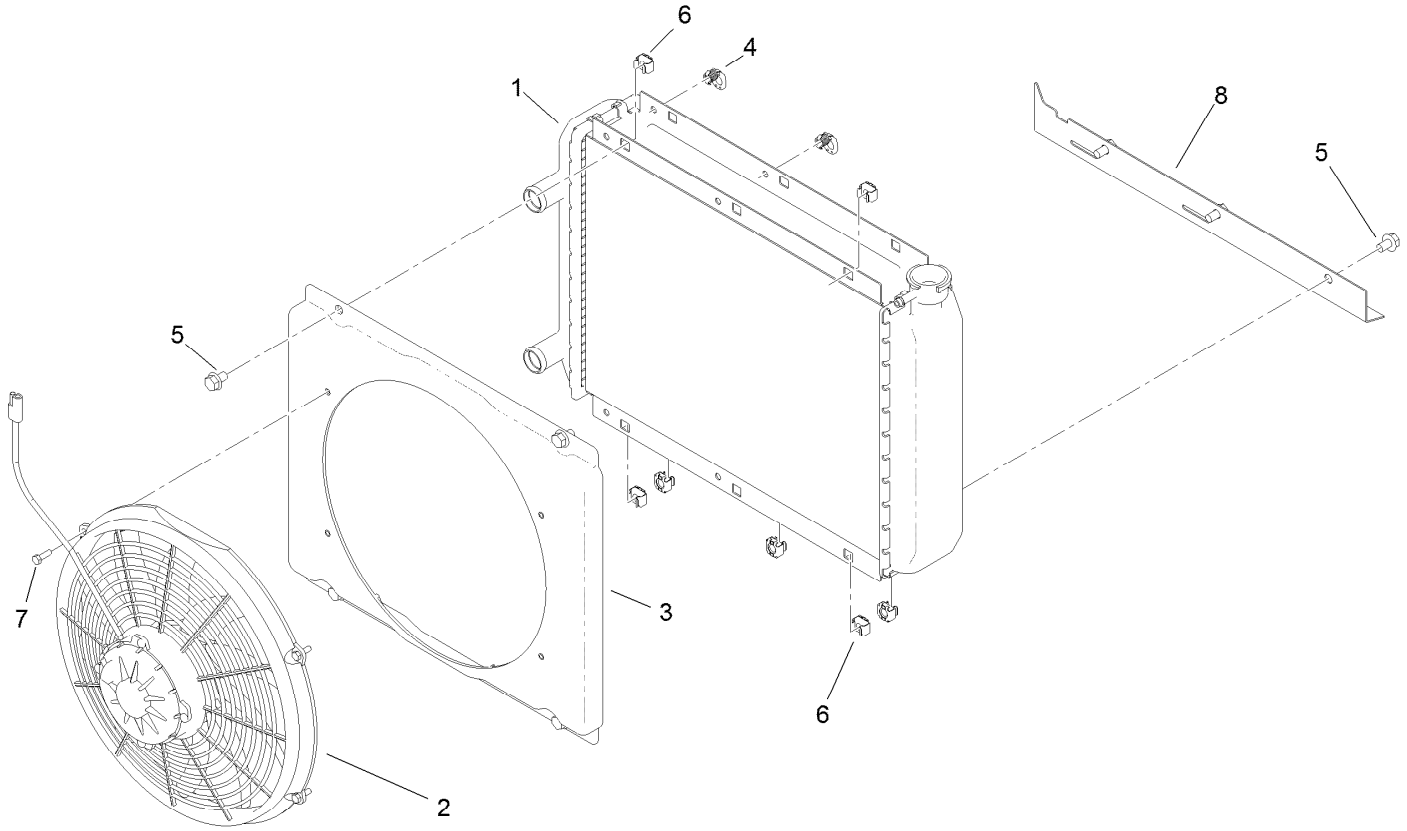

Radiator Assembly

Ref.	*Part Number*	*Qty.*	*Description*
1	114-8384	1	Radiator
2	114-8385	1	Fan-Electric
3	114-8386	1	Shroud
4	114-8387	2	Latch-Spring
5	3234-30	7	Screw-HHF
6	703856	7	Nut-Sq, Caged
7	60-6910	4	Screw-HH
8	115-7765	1	Plate-Mount, Lower

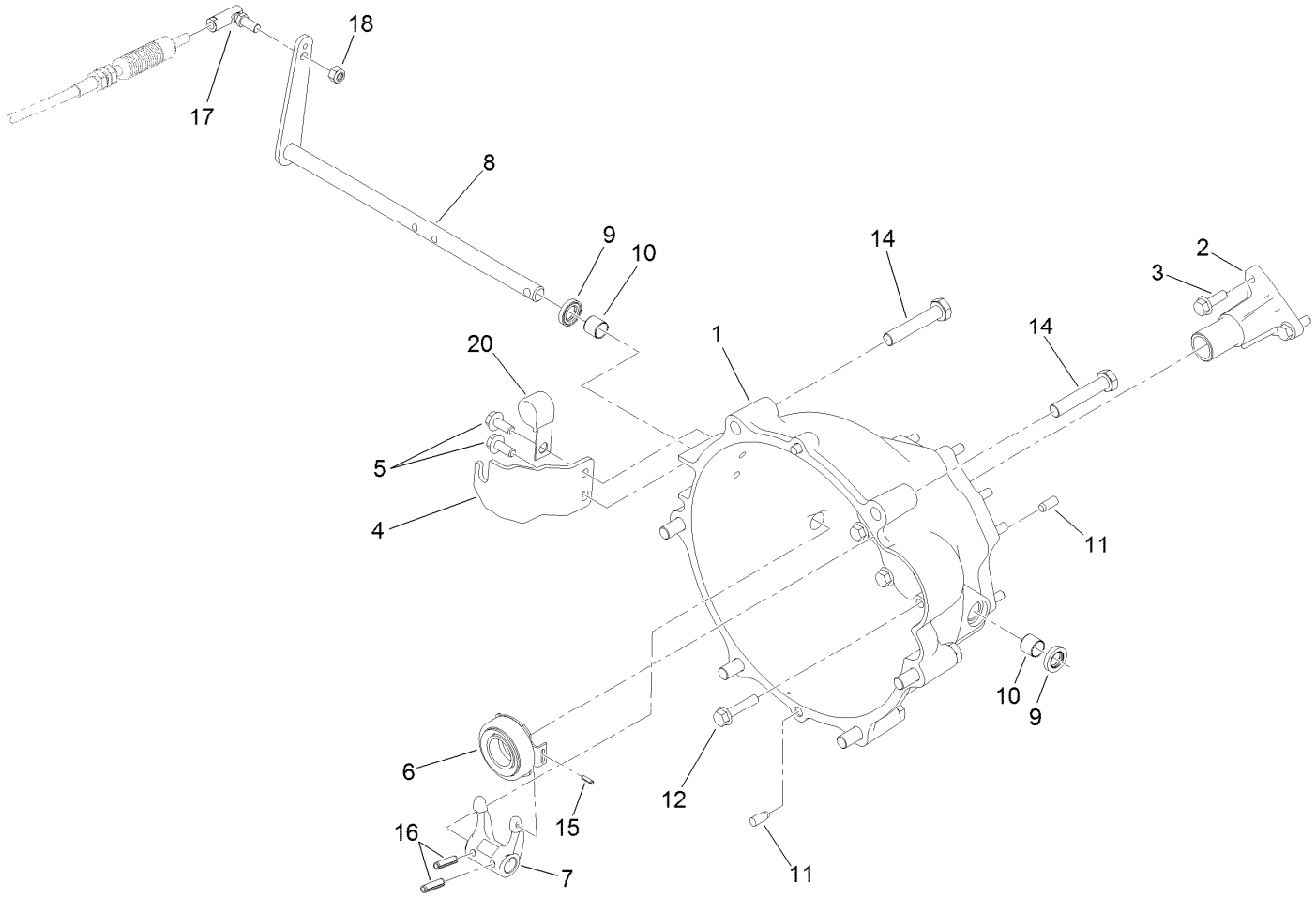

Clutch Linkage Assembly

Ref.	Part Number	Qty.	Description
1	119-9498	1	Bell Housing
2	120-4886	1	Guide-Release
3	33104-025	3	Screw-HHF
4	115-2313	1	Bracket-Cable, Clutch
5	98-7977	2	Screw-HHF
6	110-2538	1	Bearing-Release, Clutch
7	87-5300	1	Fork-Clutch
8	115-2311	1	Lever-Clutch
9	87-1920	2	Seal-Oil

Ref.	Part Number	Qty.	Description
10	87-3770	2	Bushing-Housing, Bell
11	87-1910	4	Pin-Dowel
12	33104-040	9	Screw-HHF
14	107-7983	6	Screw-HH
15	32121-7	1	Pin-Roll, Slotted
16	32121-24	2	Pin-Spring
17	2411-33	1	Balljoint-RH (W/Grommet)
18	3296-4	1	Nut-Lock
20	120-5018	1	Clip-Open J, Coated

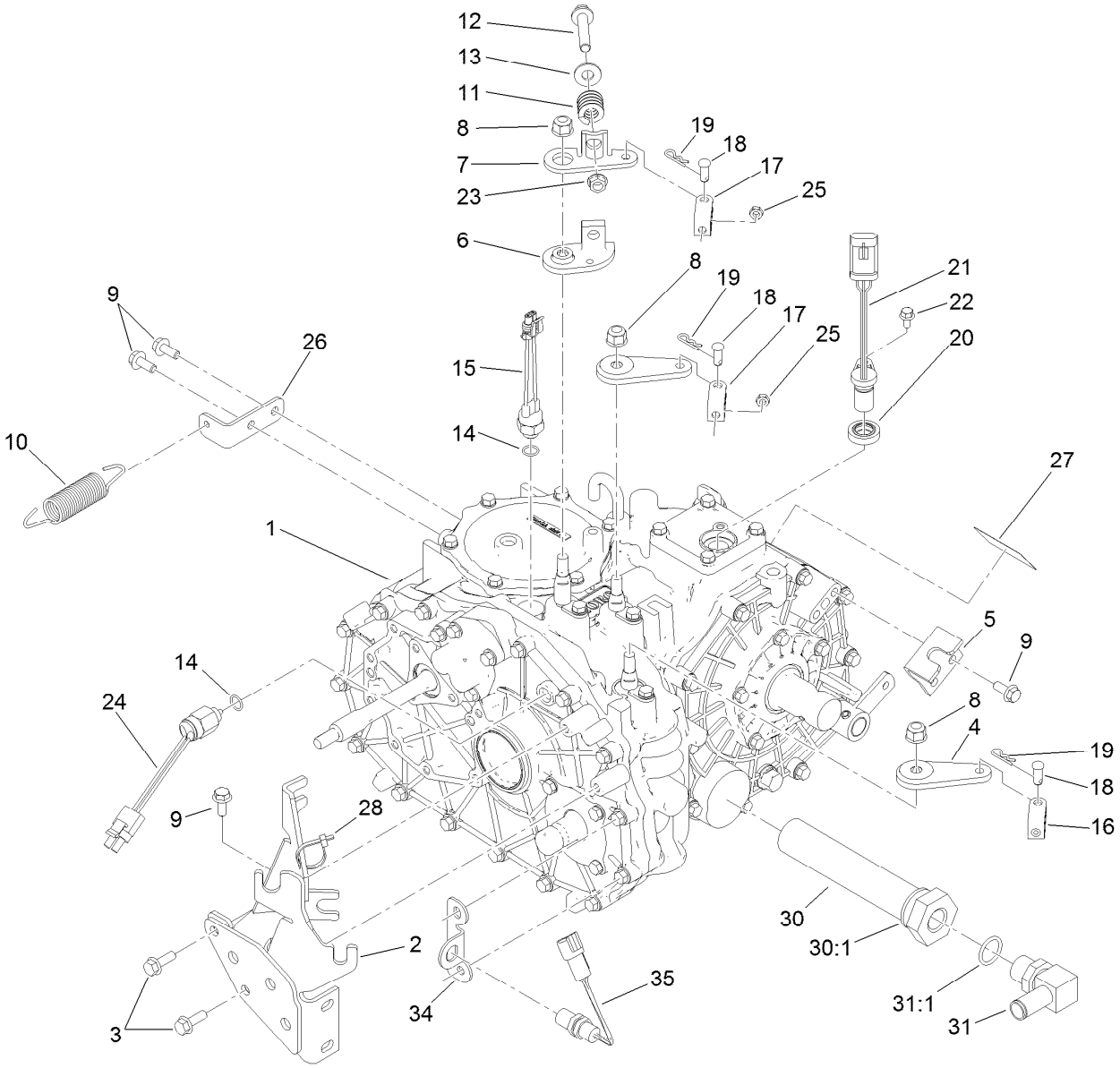

Transaxle Assembly

Ref.	Part Number	Qty.	Description
1	115-2175	1	4 Wheel Drive Transaxle ASM
2	105-4207-03	1	Mount-Cable
3	33104-025	2	Screw-HHF
4	132-6764	2	Lever-Shift
5	87-4470	1	Bracket-Lock, Differential
6	87-7970	1	Arm-Shift
7	87-8250	1	Plate-Arm, Shift
8	103-9511	3	Nut-Lock, NI
9	98-7977	5	Screw-HHF
10	68-9950	1	Spring-Traction
11	87-6910	1	Spring-Compression
12	66-9302	1	Screw-HHF, Whiz
13	3256-4	1	Washer-Flat
14	237-30	2	O-Ring
15	72-4310	1	Switch-Ball
16	87-7160	1	Clevis-Cable
17	87-2310	2	Clevis-Cable

Ref.	Part Number	Qty.	Description
18	283-62	3	Pin-Clevis
19	3290-307	3	Pin-Cotter
20	92-3735	1	Seal-Sensor, Oil
21	120-4800	1	Sensor-Geartooth
22	33103-012	1	Screw-HHF
23	3290-357	1	Nut-HHF, Whiz
24	87-6710	1	Switch-Transmission
25	3220-1	2	Nut-Jam
26	131-3488	1	Bracket-Spring, Clutch
27	115-7741	1	Decal-Oil, Transmission
28	3290-379	1	Tie-Cable
30	87-3990	1	Strainer-Transaxle
30:1	237-101	1	O-Ring
31	353-987	1	Fitting-Elbow, 90
31:1	237-81	1	O-Ring
34	136-6277	1	Bracket-Sensor, 4Wd
35	136-6349	1	Sensor

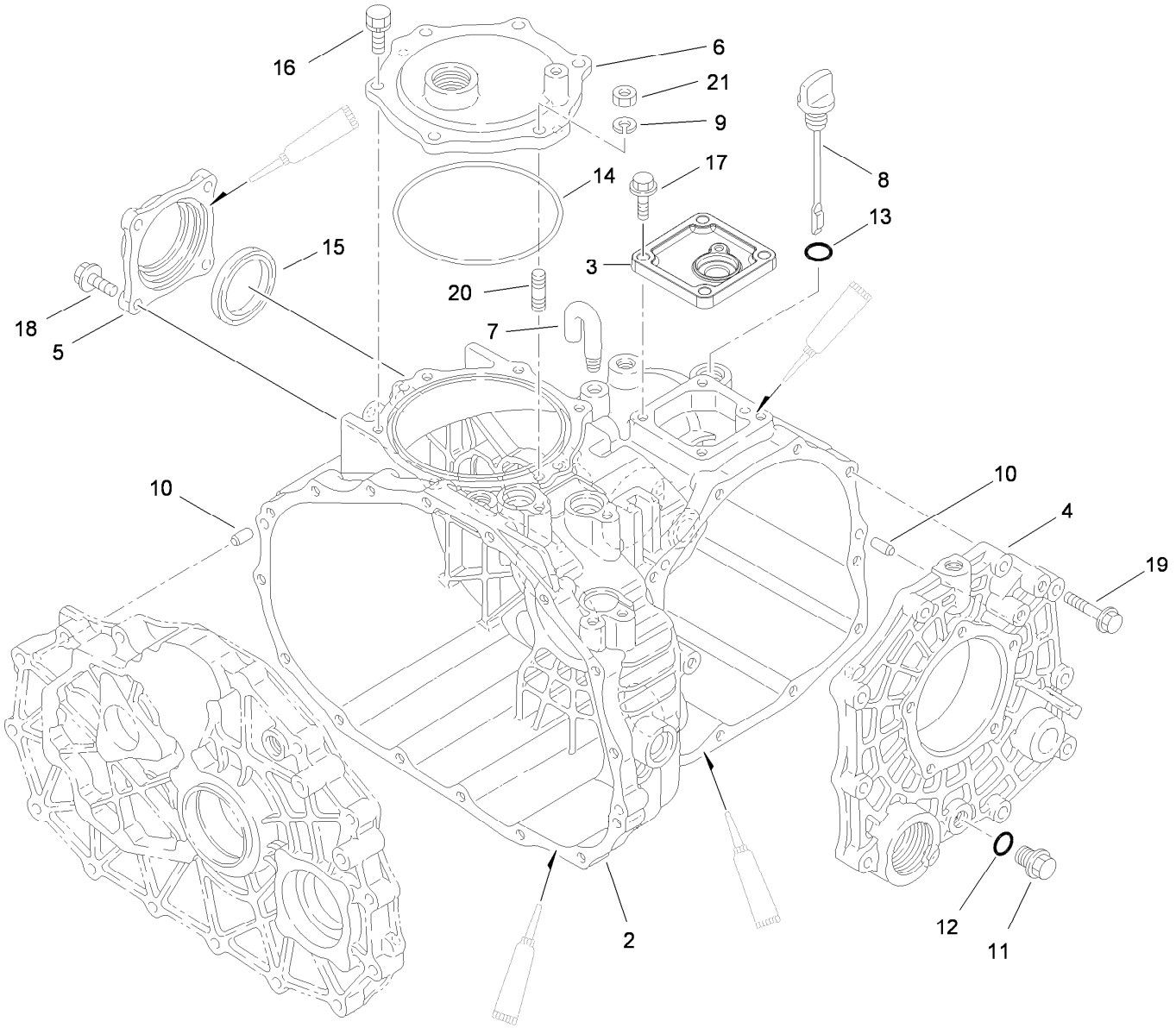

Case Assembly
4 Wheel Drive Transaxle Assembly No. 115-2175

Ref.	Part Number	Qty.	Description
2	92-0651	1	Case-Transmission
3	92-0810	1	Cover-Upper, Sensor
4	92-0653	1	Cover-Side
5	92-0655	1	Cover-Seal, Axle
6	92-0656	1	Cover-Upper, PTO
7	92-0743	1	Breather-Air
8	92-0662	1	Cap-Oil
9	92-0762	1	Washer-Spring
10	92-0765	4	Pin-Parallel
11	92-0773	1	Plug-Drain

Ref.	Part Number	Qty.	Description
12	92-0787	1	O-Ring
13	92-0788	1	O-Ring
14	92-0790	1	O-Ring
15	92-0793	1	Seal-Oil
16	92-0796	5	Bolt
17	33104-025	4	Screw-HHF
18	33104-025	4	Screw-HHF
19	33104-040	10	Screw-HHF
20	92-0805	1	Bolt 8X20
21	68-9400	1	Nut-Flange

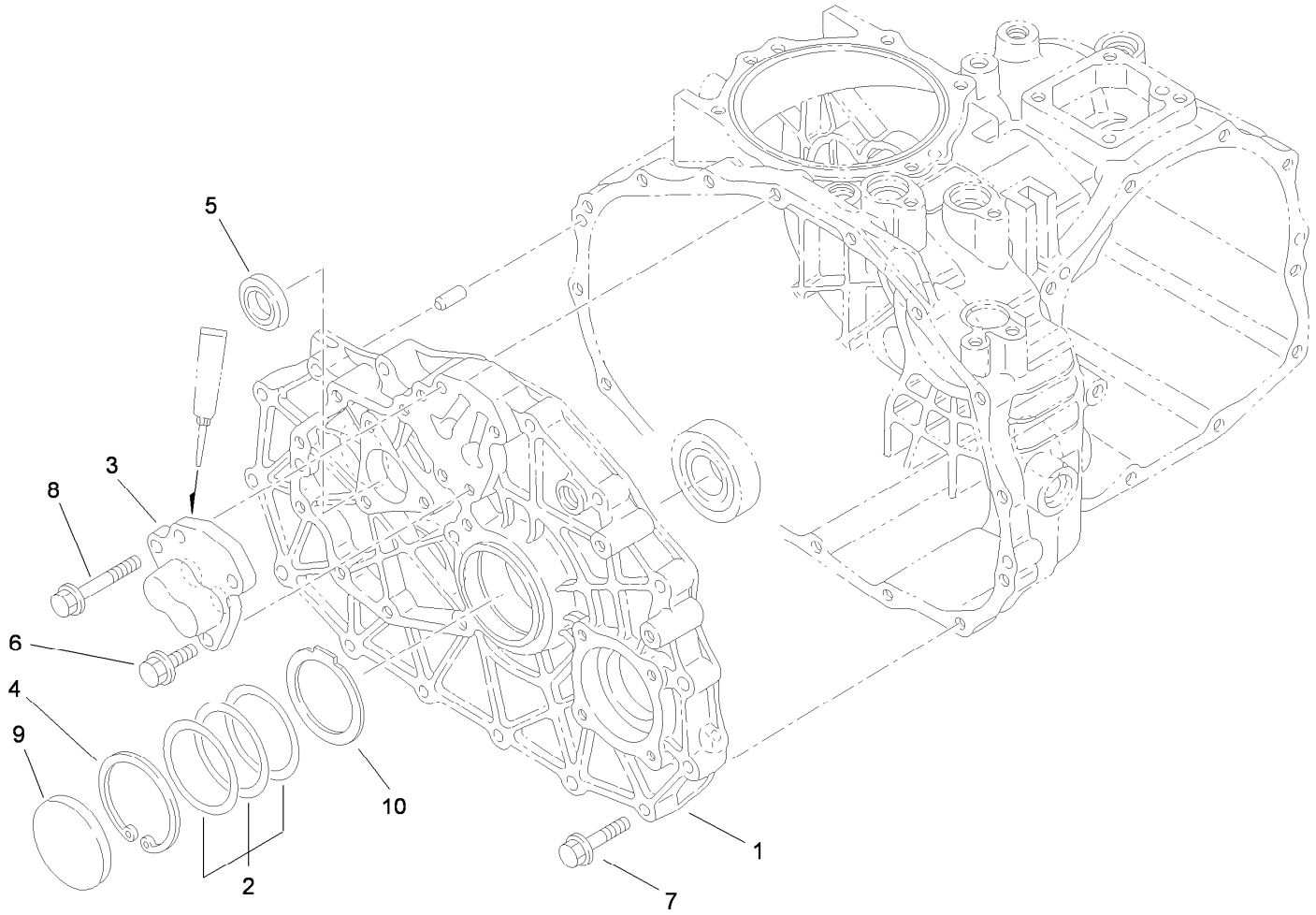

Center Plate Assembly
4 Wheel Drive Transaxle Assembly No. 115-2175

Ref.	*Part Number*	*Qty.*	*Description*
1	100-4462	1	Plate-Center, 4Wd
2	100-4460	1	Shim-Set
3	92-0706	1	Shaft-Fork
4	92-0759	1	Ring-Snap
5	92-0791	1	Seal-Oil
6	33104-025	3	Screw-HHF
7	33104-040	15	Screw-HHF
8	33104-050	1	Screw-HHF
9	92-0807	1	Cap-Sealing
10	100-4465	1	Shim (W/Tab)

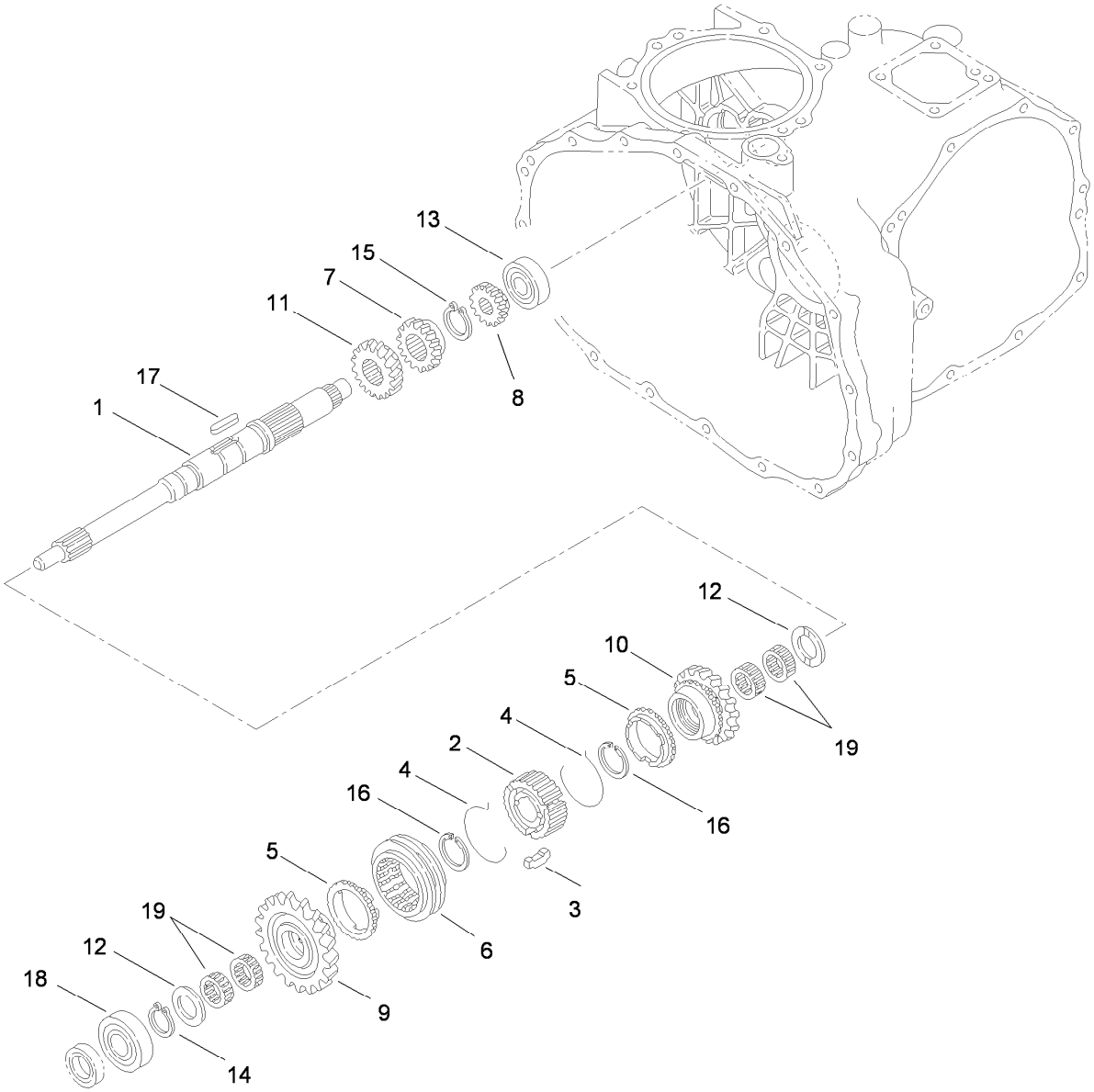

Main Shaft Assembly
4 Wheel Drive Transaxle Assembly No. 115-2175

Ref.	Part Number	Qty.	Description
1	92-0663	1	Shaft-Main
2	92-0664	1	Hub-Synchro
3	92-0665	3	Key-Synchro
4	92-0666	2	Spring-Synchro
5	92-0667	2	Ring-Synchro
6	92-0668	1	Shifter-Synchro
7	92-0672	1	Gear-Main, 18 Tooth
8	92-0673	1	Gear-Main, 14 Tooth
9	110-2521	1	Gear-Main, 27 Tooth
10	110-2522	1	Gear- Main, 24 Tooth

Ref.	Part Number	Qty.	Description
11	92-0687	1	Gear-Main, 16 Tooth
12	92-0740	2	Washer-Thrust
13	92-0650	1	Bearing
14	92-0753	1	Ring-Snap
15	92-0754	1	Ring-Snap
16	92-0763	2	Ring-Snap
17	92-0772	1	Key
18	251-8	1	Bearing-Ball
19	92-0781	4	Bearing-Needle

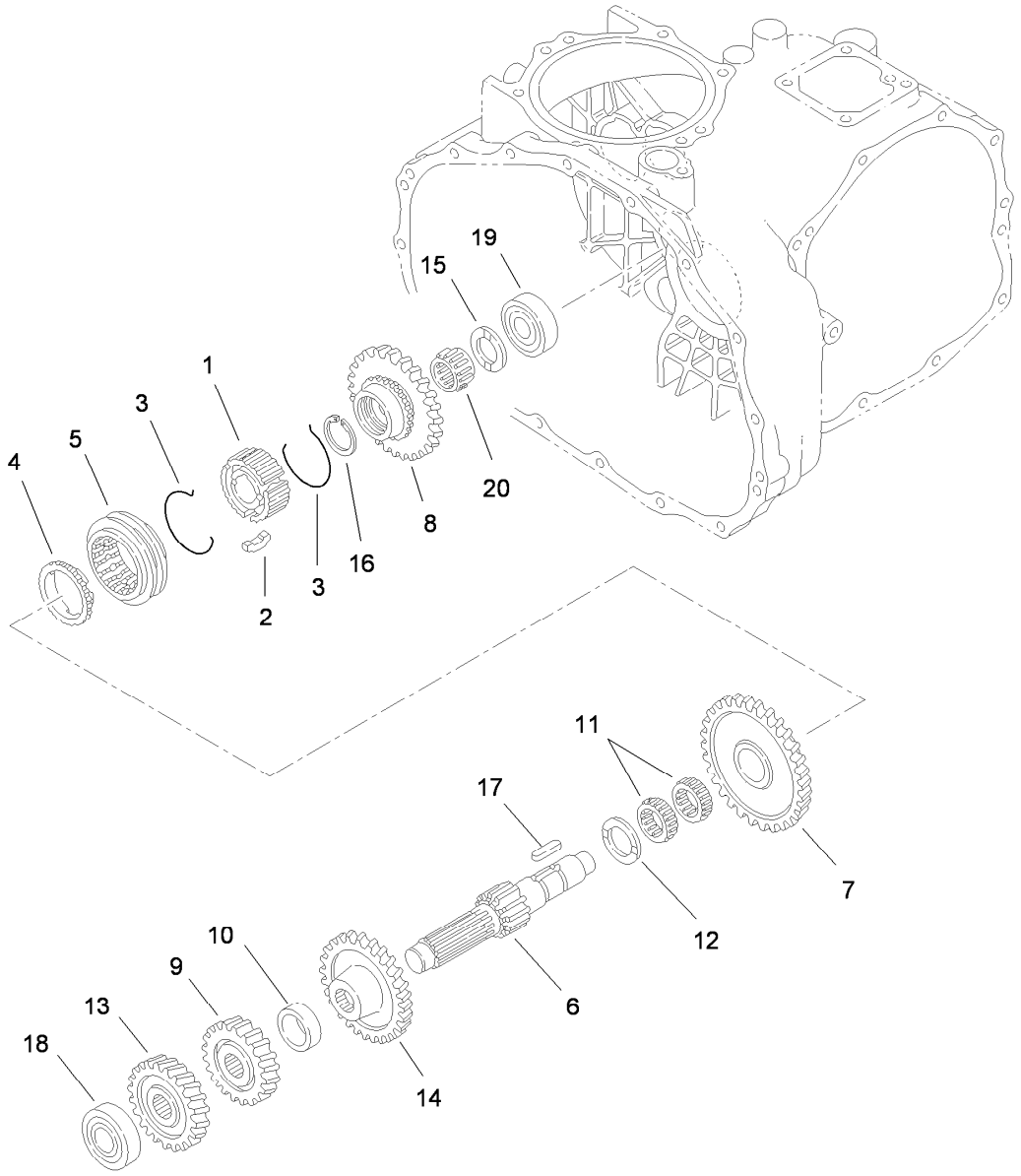

Reduction Shaft Assembly
4 Wheel Drive Transaxle Assembly No. 115-2175

Ref.	Part Number	Qty.	Description
1	92-0664	1	Hub-Synchro
2	92-0665	3	Key-Synchro
3	92-0666	2	Spring-Synchro
4	92-0667	1	Ring-Synchro
5	92-0668	1	Shifter-Synchro
6	92-0674	1	Shaft-Reduction
7	110-2524	1	Gear- Reduction, 49 Tooth
8	92-0819	1	Gear-Reduction, 40 Tooth
9	92-0769	1	Pin-Roll
10	92-0680	1	Collar

Ref.	Part Number	Qty.	Description
11	92-0681	2	Bearing-Needle
12	92-0682	1	Washer-Thrust
13	92-0822	1	Gear-Reduction, 28 Tooth
14	92-0823	1	Gear-Reduction, 43 Tooth
15	92-0740	1	Washer-Thrust
16	92-0673	1	Gear-Main, 14 Tooth
17	92-0772	1	Key
18	105-7985	1	Bearing
19	92-0778	1	Bearing
20	92-0782	1	Bearing-Needle

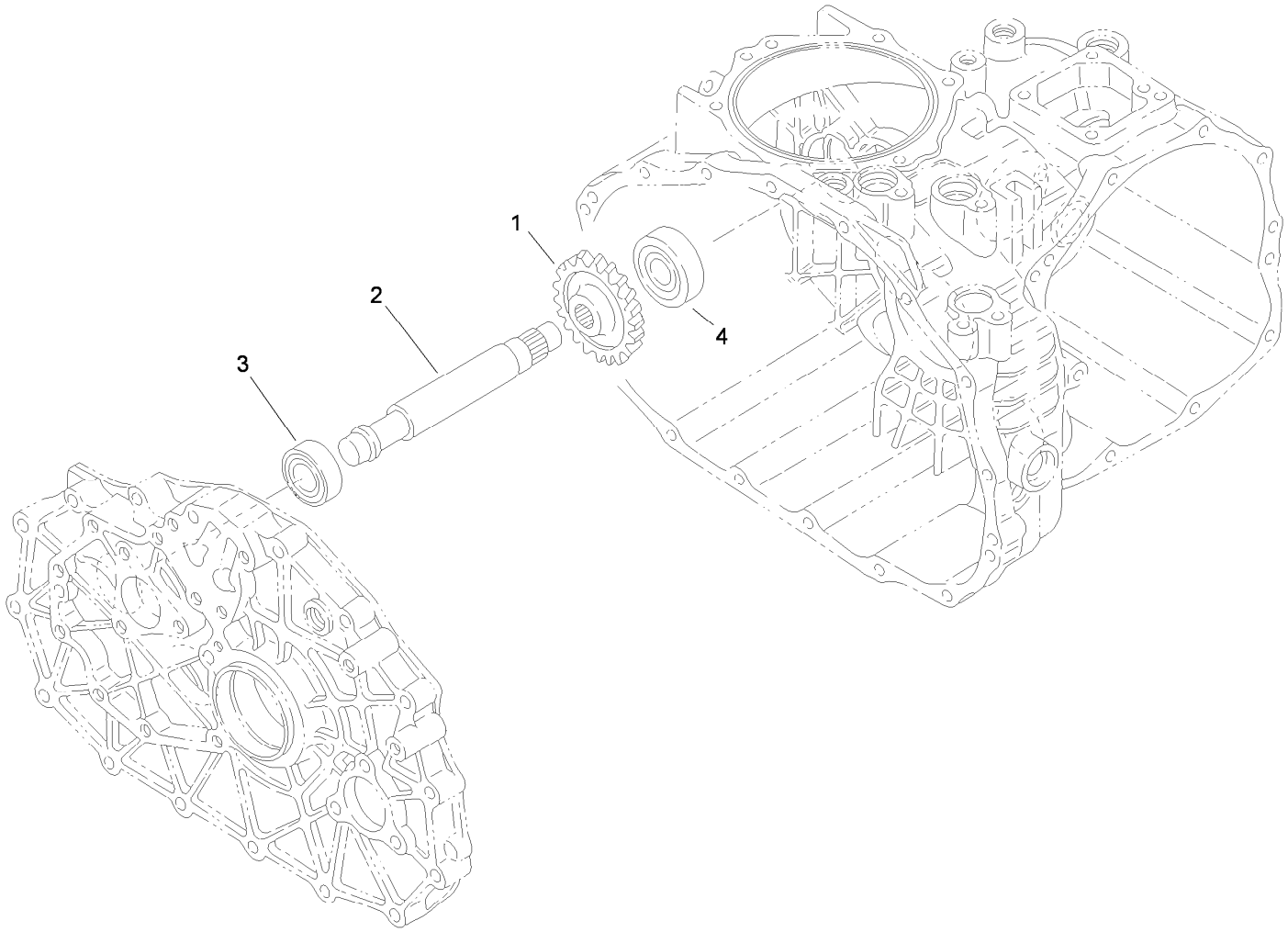

Reverse Shaft Assembly
4 Wheel Drive Transaxle Assembly No. 115-2175

Ref.	*Part Number*	*Qty.*	*Description*
1	92-0684	1	Gear-Reverse, 33 Tooth
2	92-0824	1	Shaft-Idler, Reverse
3	251-346	1	Bearing-Ball
4	92-0778	1	Bearing

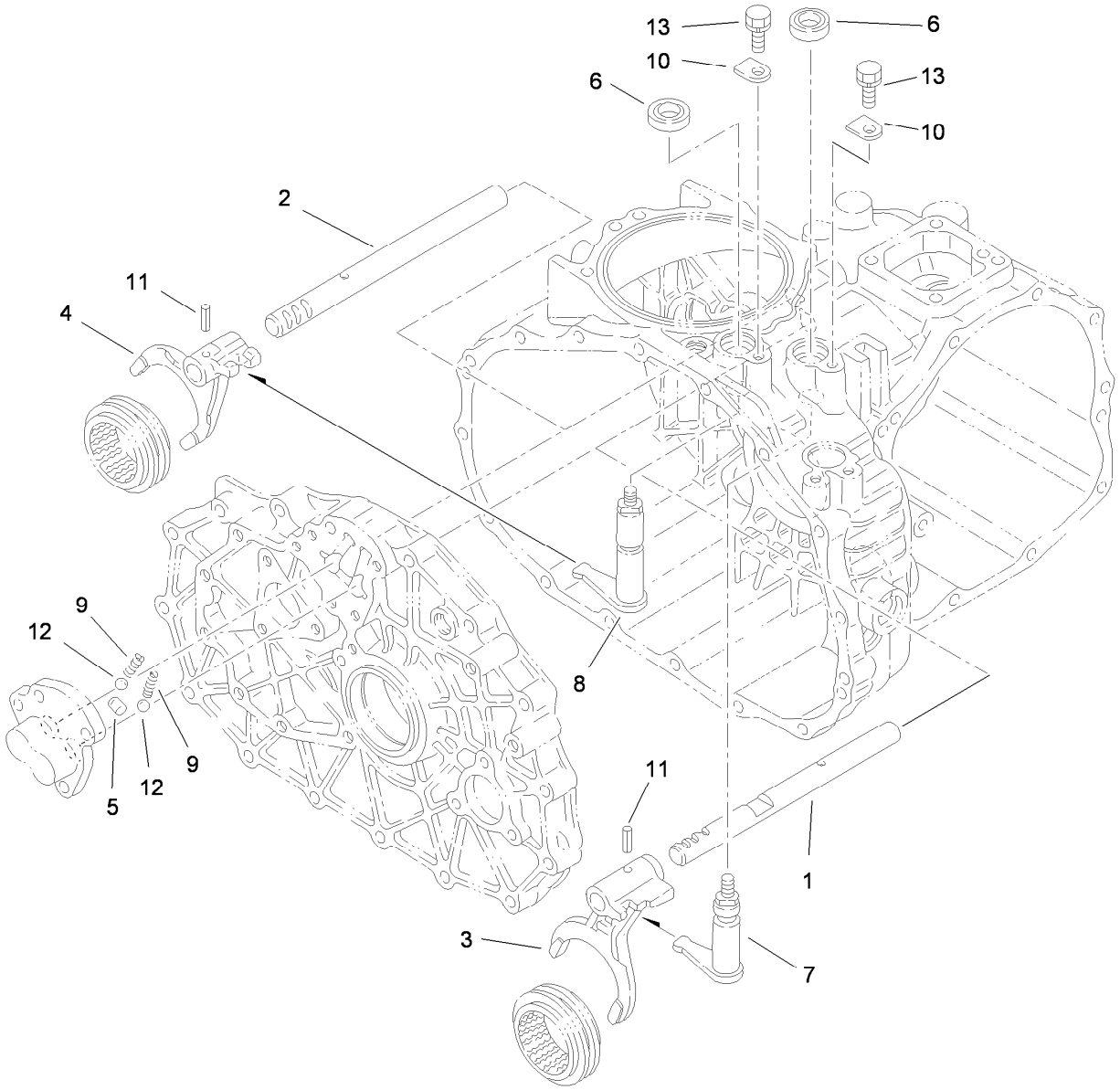

Main Shift Assembly
4 Wheel Drive Transaxle Assembly No. 115-2175

Ref.	*Part Number*	*Qty.*	*Description*
1	92-0698	1	Shaft-Fork
2	92-0699	1	Shaft-Fork
3	92-0700	1	Fork-Shift
4	92-0701	1	Fork-Shift
5	92-0705	1	Lock-Spindle
6	92-0729	2	Seal-Oil
7	92-0816	1	Arm-Shift
8	92-0817	1	Arm-Shift
9	92-0731	2	Spring
10	92-0732	2	Plate-Keeper
11	92-0769	2	Pin-Roll
12	92-0785	2	Ball-Steel
13	33104-016	2	Screw-HHF

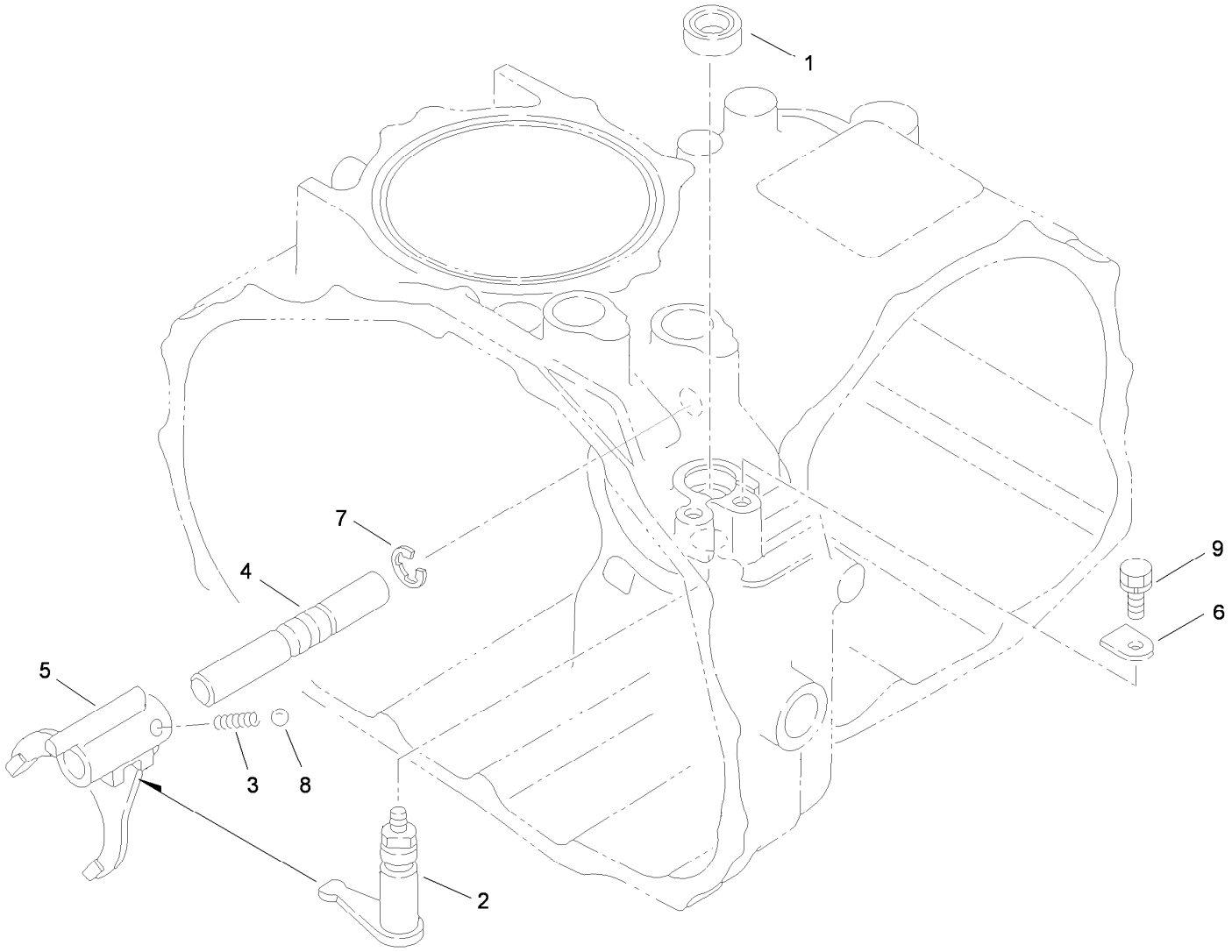

Hi-Lo Shift Assembly
4 Wheel Drive Transaxle Assembly No. 115-2175

Ref.	*Part Number*	*Qty.*	*Description*
1	92-0729	1	Seal-Oil
2	92-0818	1	Arm-Shift
3	92-0731	1	Spring
4	92-0708	1	Shaft-Fork
5	92-0709	1	Fork-Shift
6	92-0732	1	Plate-Keeper
7	92-0761	1	Ring-E
8	92-0785	1	Ball-Steel
9	33104-016	1	Screw-HHF

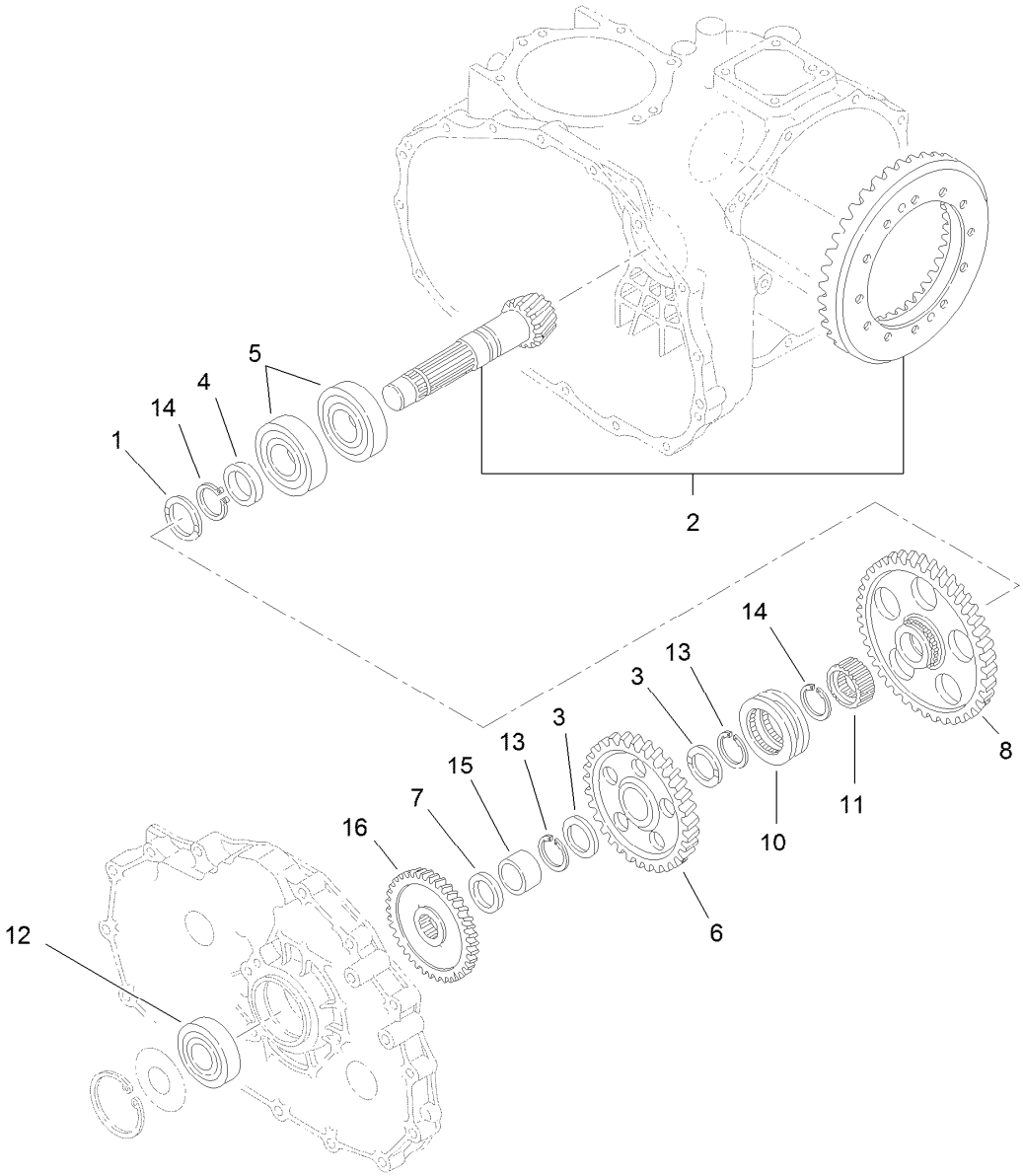

Countershaft Assembly
4 Wheel Drive Transaxle Assembly No. 115-2175

Ref.	*Part Number*	*Qty.*	*Description*
1	92-0741	1	Washer-Thrust
2	105-7983	1	Countershaft And Ring Gear ASM
3	92-0711	2	Washer-Thrust
4	92-0713	1	Collar
5	92-0714	2	Bearing
6	92-0715	1	Gear-Countershaft
7	92-0716	1	Collar
8	92-0717	1	Gear-Countershaft
10	92-0718	1	Shifter
11	105-7986	1	Collar-Spline
12	92-0712	1	Bearing-Ball
13	105-7987	2	Ring-Snap
14	92-0755	2	Ring-Snap
15	92-0783	1	Race-Inner
16	92-5186	1	Pinion

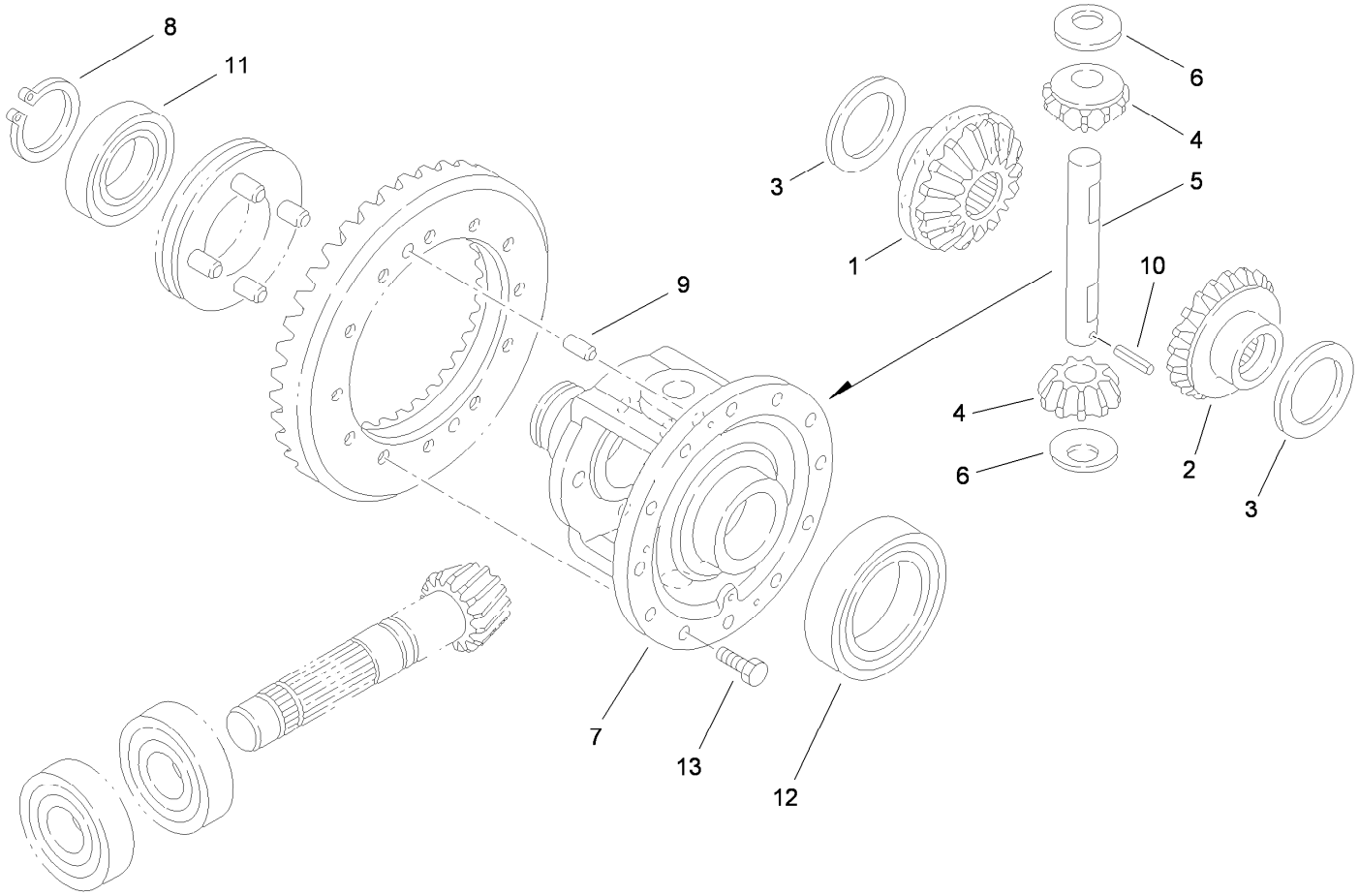

Differential Gear Assembly
4 Wheel Drive Transaxle Assembly No. 115-2175

Ref.	*Part Number*	*Qty.*	*Description*
1	92-0745	1	Gear-Side, LH
2	92-0746	1	Gear-Side, RH
3	92-0747	2	Side-Gear, Left Inner
4	92-0748	2	Pinion-Differential
5	92-0749	1	Shaft-Pinion
6	92-0750	2	Washer
7	92-0720	1	Case-Differential
8	92-0756	1	Ring-Snap
9	92-0765	2	Pin-Parallel
10	92-0768	1	Pin-Roll, Spring
11	92-0775	1	Bearing
12	92-0776	1	Bearing
13	92-0803	12	Bolt

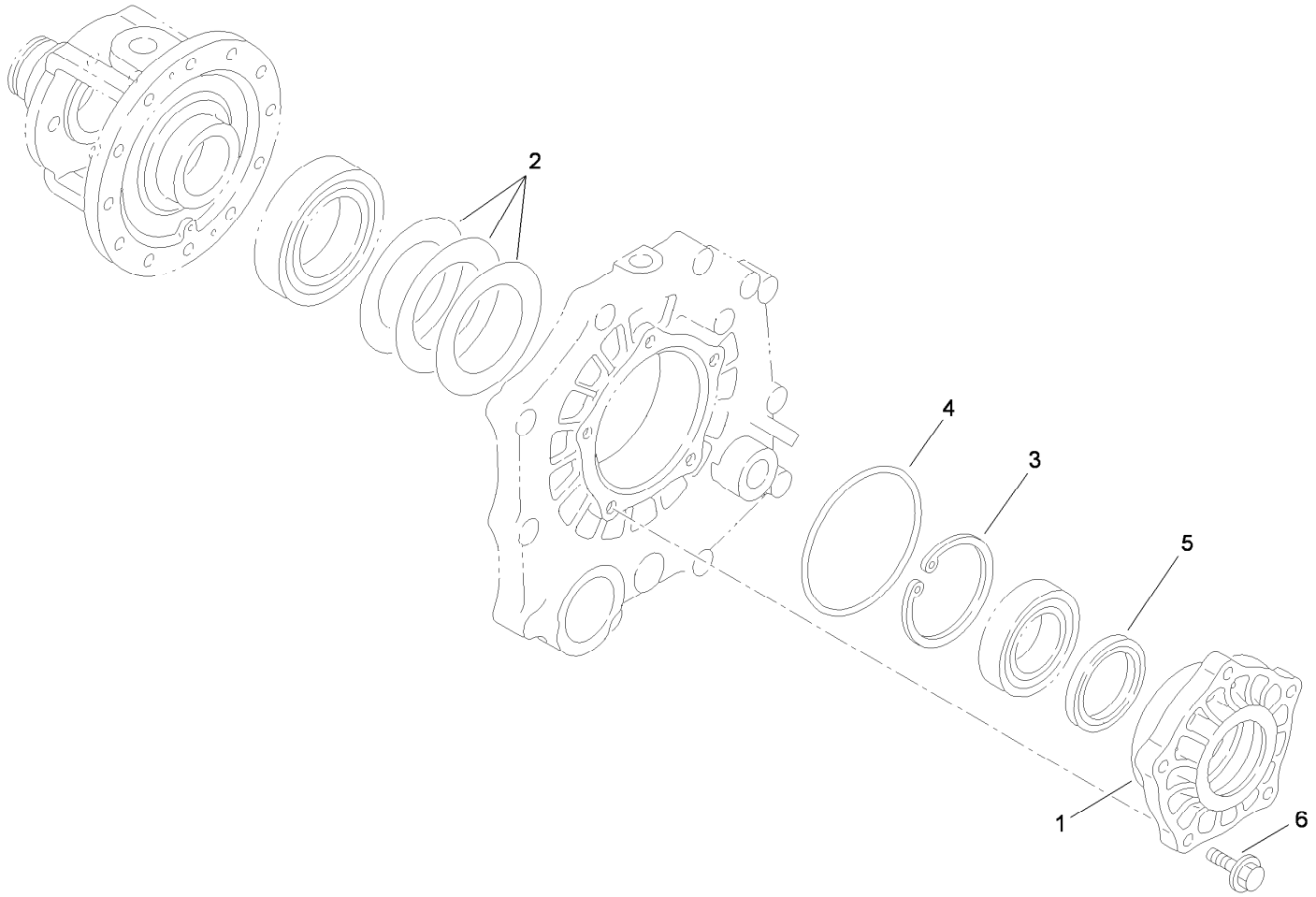

Differential Carrier Assembly
4 Wheel Drive Transaxle Assembly No. 115-2175

Ref.	*Part Number*	*Qty.*	*Description*
1	92-0654	1	Carrier-Differential
2	92-0809	1	Set-Shim
3	92-0760	1	Ring-Snap
4	92-0789	1	O-Ring
5	92-0793	1	Seal-Oil
6	33104-030	5	Screw-HHF

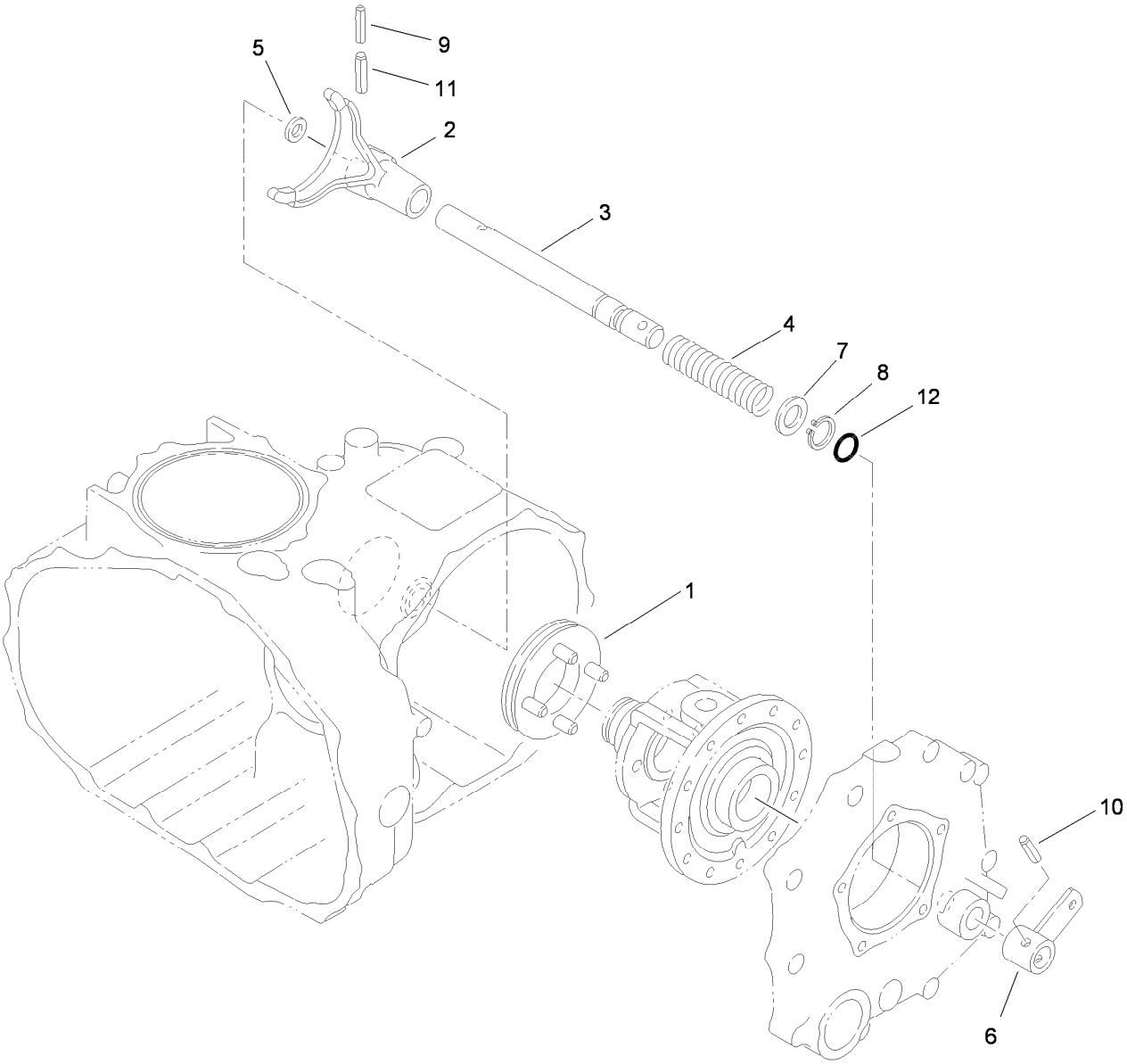

Differential Lock Assembly
4 Wheel Drive Transaxle Assembly No. 115-2175

Ref.	*Part Number*	*Qty.*	*Description*
1	92-0730	1	Slider-Differential, Lock
2	92-0721	1	Fork-Lock, Differential
3	92-0722	1	Shaft-Fork, Lock Differential
4	92-0723	1	Spring-Lock, Differential
5	92-0744	1	Washer
6	92-0724	1	Arm-Lock, Differential
7	92-0733	1	Washer
8	92-0753	1	Ring-Snap
9	92-0768	1	Pin-Roll, Spring
10	92-0770	1	Pin-Roll, Spring
11	92-0771	1	Pin-Roll, Spring
12	92-0787	1	O-Ring

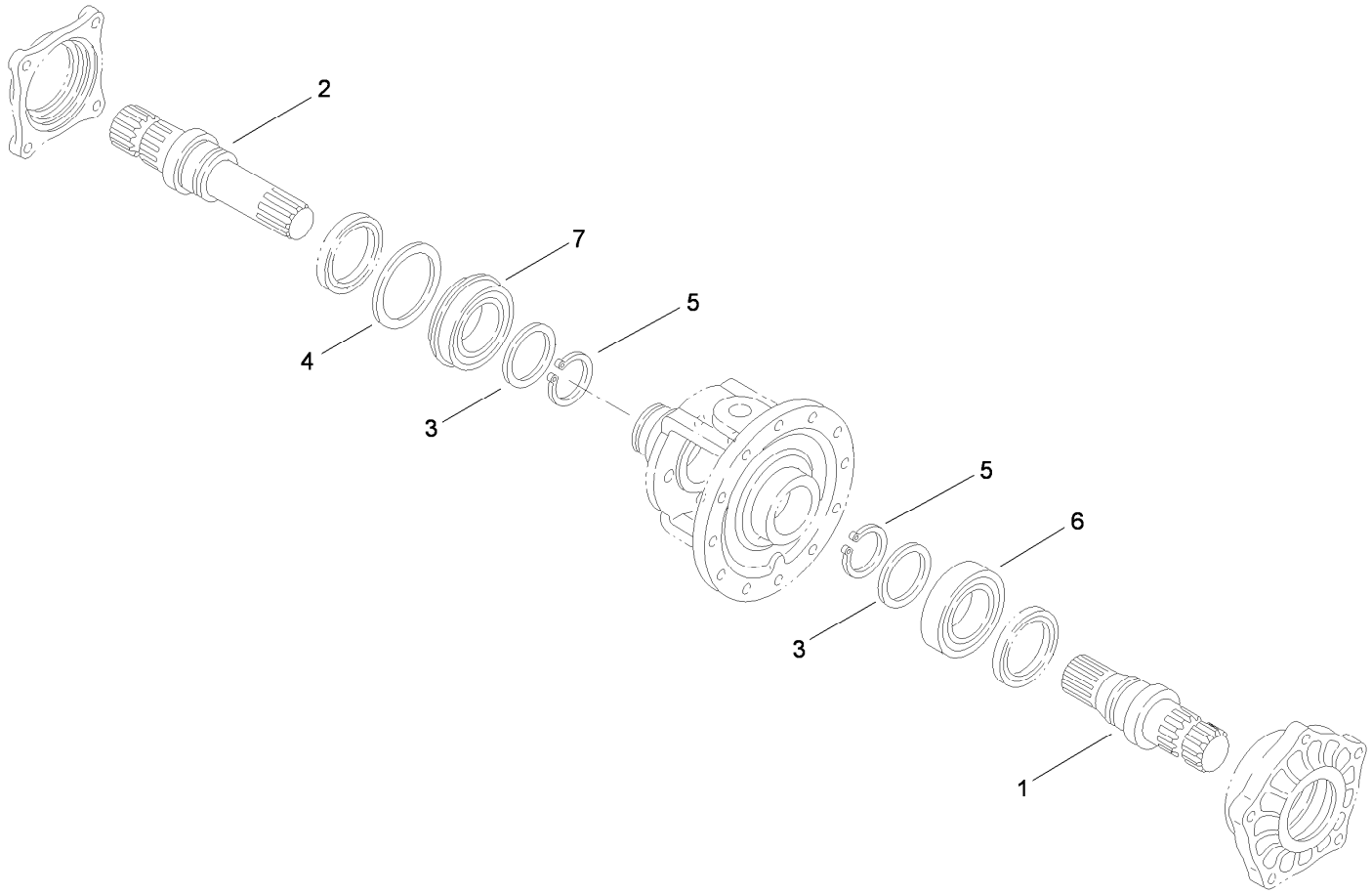

Axle Shaft Assembly
4 Wheel Drive Transaxle Assembly No. 115-2175

Ref.	*Part Number*	*Qty.*	*Description*
1	92-0725	1	Shaft-Axle, Left
2	92-0726	1	Shaft-Axle, Right
3	92-0727	2	Washer
4	92-0728	1	Washer
5	92-0756	2	Ring-Snap
6	92-0775	1	Bearing
7	92-0780	1	Bearing

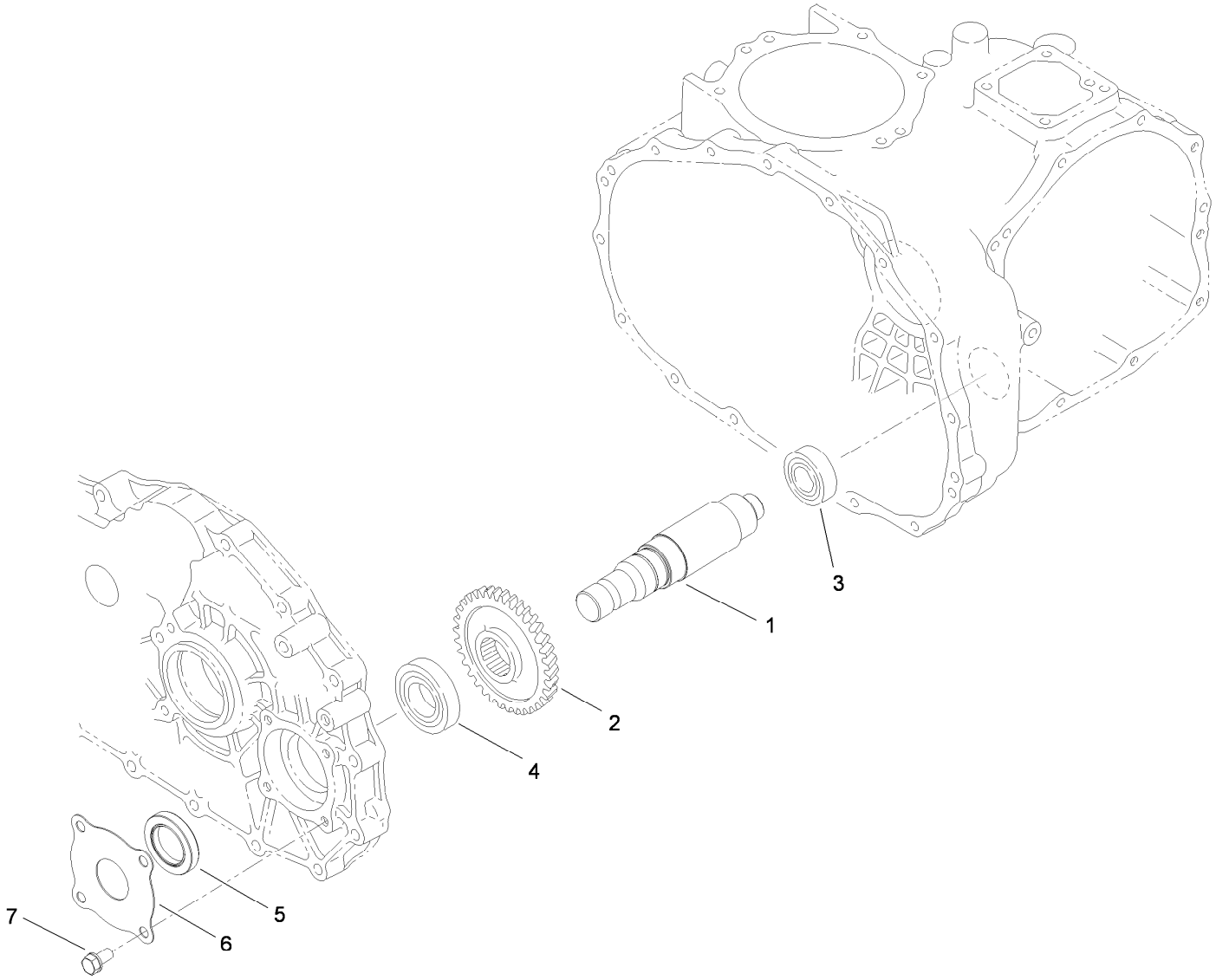

Front Drive Assembly
4 Wheel Drive Transaxle Assembly No. 115-2175

Ref.	*Part Number*	*Qty.*	*Description*
1	115-7828	1	Driveshaft-Front
2	92-5184	1	Gear
3	251-346	1	Bearing-Ball
4	92-5185	1	Bearing
5	115-7829	1	Seal
6	115-7830	1	Protector-Seal
7	33104-016	4	Screw-HHF

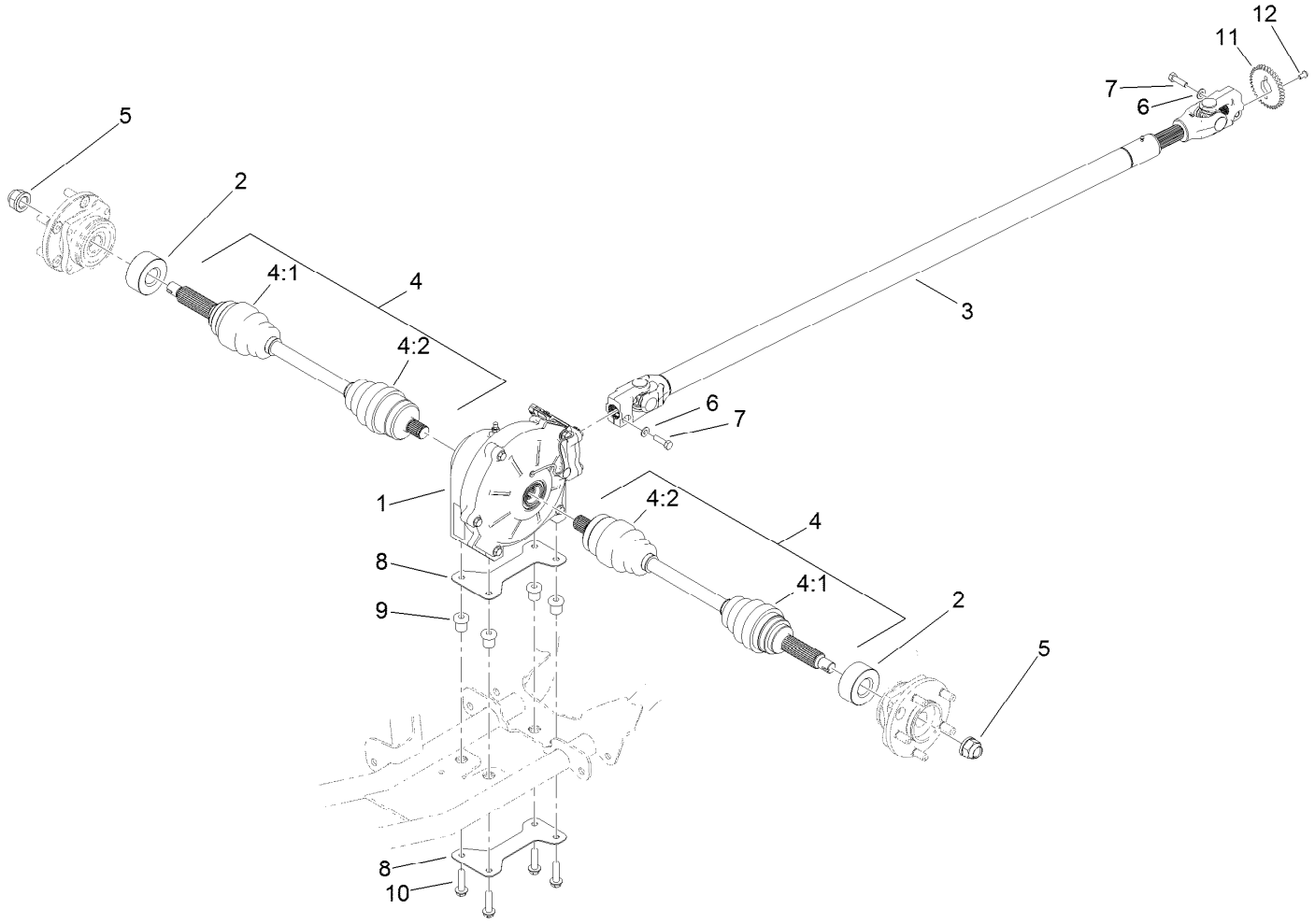

4 Wheel Drive Assembly

Ref.	Part Number	Qty.	Description
1	119-0824	1	Differential ASM
2	115-2254	2	Spacer-Axle
3	136-6327	1	Drive Shaft ASM
4	115-2172	2	Cv Axle ASM
4:1	107-2891	1	Outboard Boot Kit
4:2	107-2892	1	Inboard Boot Kit
5	115-2164	2	Nut-Spindle
6	3256-23	2	Washer-Plain
7	3210-6	2	Screw-HH
8	119-9477-03	2	Plate-Differential
9	63-9750	4	Mount
10	3234-18	4	Screw-HHF
11	136-6331	1	Ring-Sensor, 4Wd
12	137-2794	1	Screw-HSBH

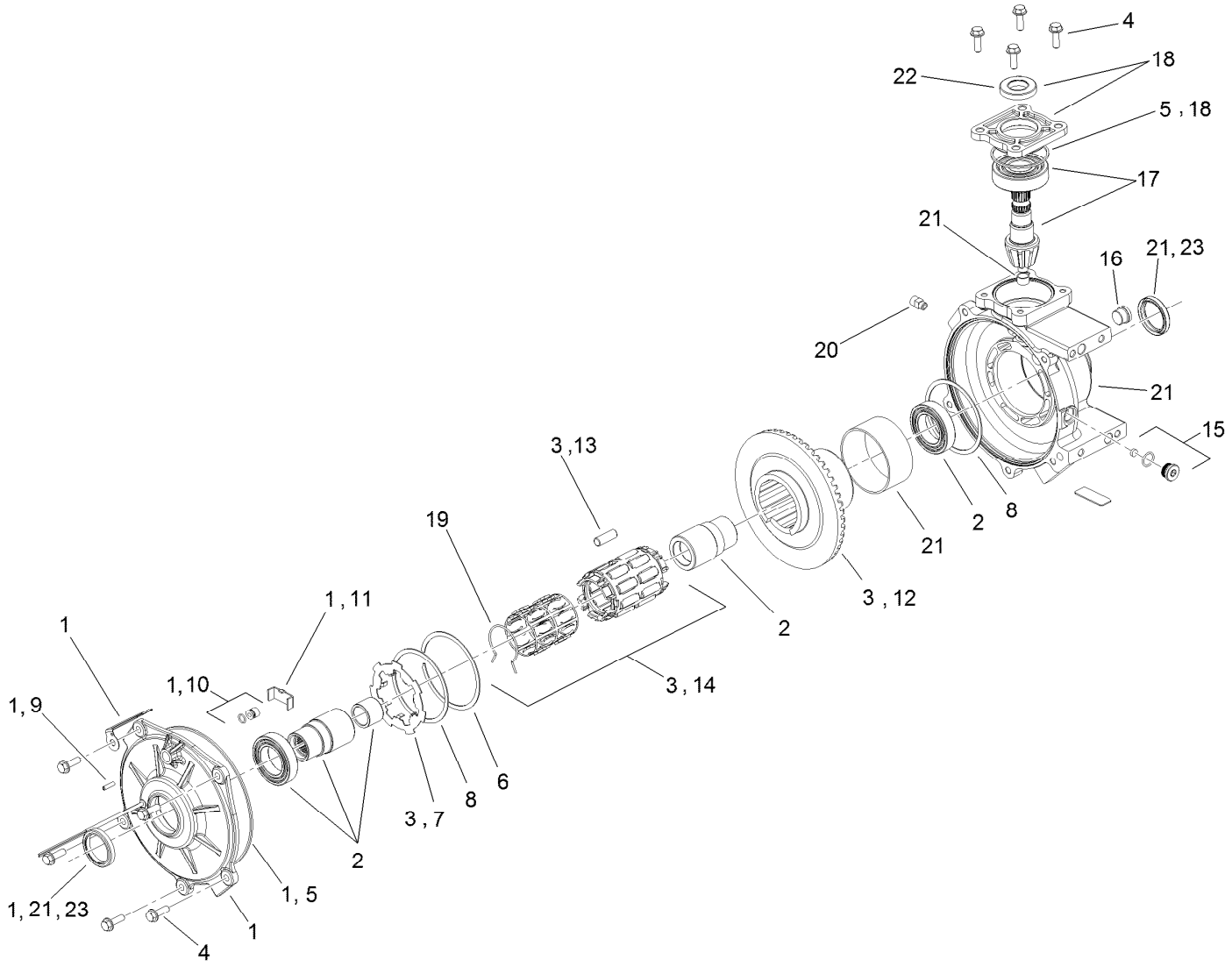

Differential Assembly No. 119-0824

Ref.	Part Number	Qty.	Description
1	115-7790	1	Output Cover ASM
2	119-9479	1	Output Hub ASM
3	115-7792	1	Clutch ASM
4	115-7793	1	Bolt Kit
5	115-7794	1	Seal Kit
6	115-7795	1	Ring-Retaining, Internal
7	115-7796	1	Plate-Armature, Notched
8	115-7797	1	Shim
9	115-7798	1	Screw-Set
10	115-7799	1	Thrust Button ASM
11	115-7800	1	Plate-Thrust
12	115-7801	1	Gear-Ring, 50T

Ref.	Part Number	Qty.	Description
13	115-7802	1	Roll Kit
14	115-7803	1	Roll Cage ASM
15	115-7804	1	Drain Plug ASM
16	115-7805	1	Plug-Oil, Fill
17	115-7806	1	Shaft-Pinion, 9T
18	115-7807	1	Input Cover ASM
19	115-7808	1	Spring-Torsion
20	117-4985	1	Vent-Protected
21	119-9480	1	Gearcase ASM
22	127-8866	1	Input Seal
23	127-8867	2	Output Seal

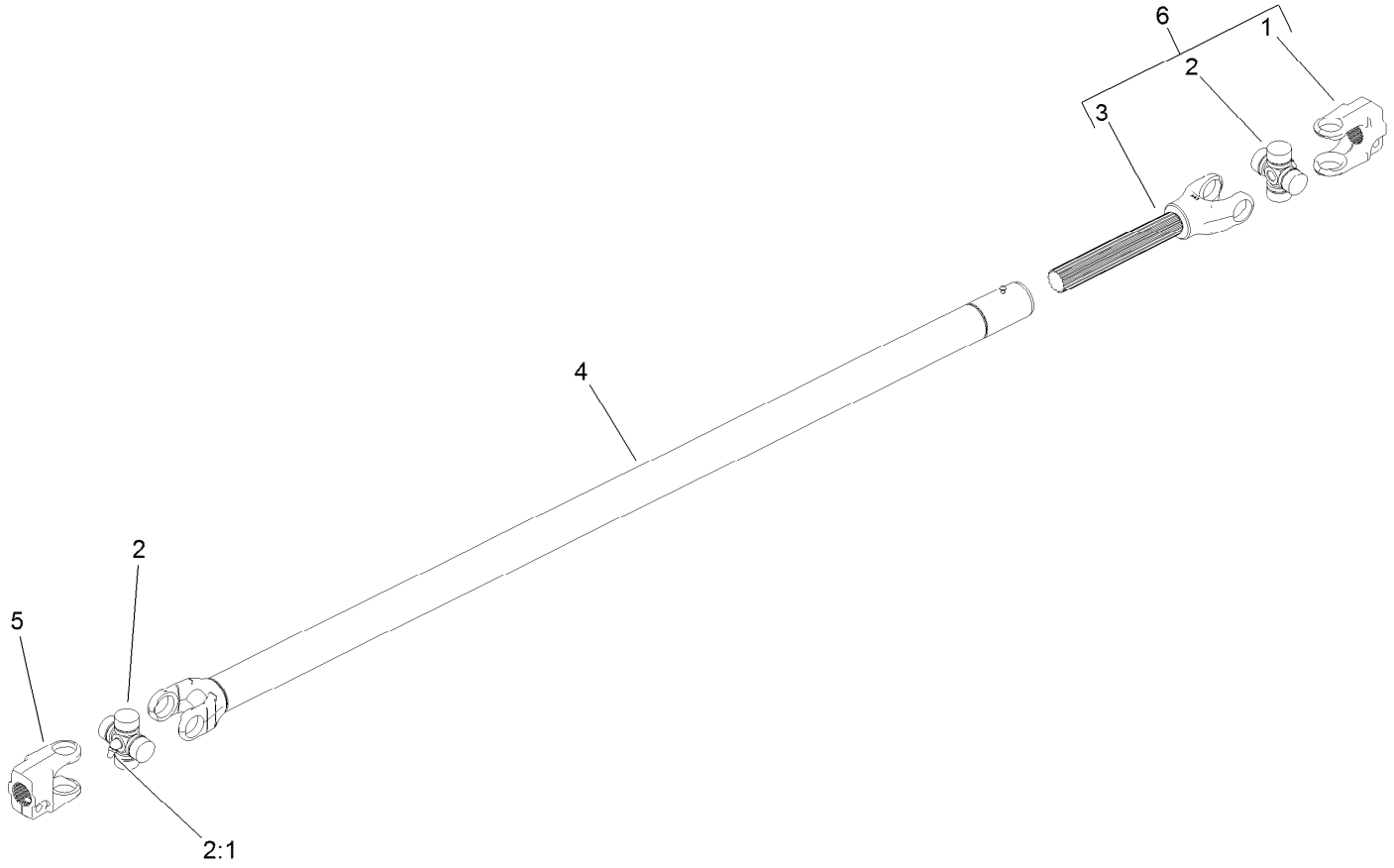

Drive Shaft Assembly No. 136-6327

Ref.	*Part Number*	*Qty.*	*Description*
1	136-6326	1	Yoke
2	54-9180	2	U-Joint Kit
2:1	62-3820	1	Fitting-Grease
3	115-7708	1	Yoke And Shaft
4	115-7709	1	Yoke, Tube And Slip Sleeve ASM
5	115-7707	1	Yoke
6	136-6338	1	Yoke And Shaft ASM

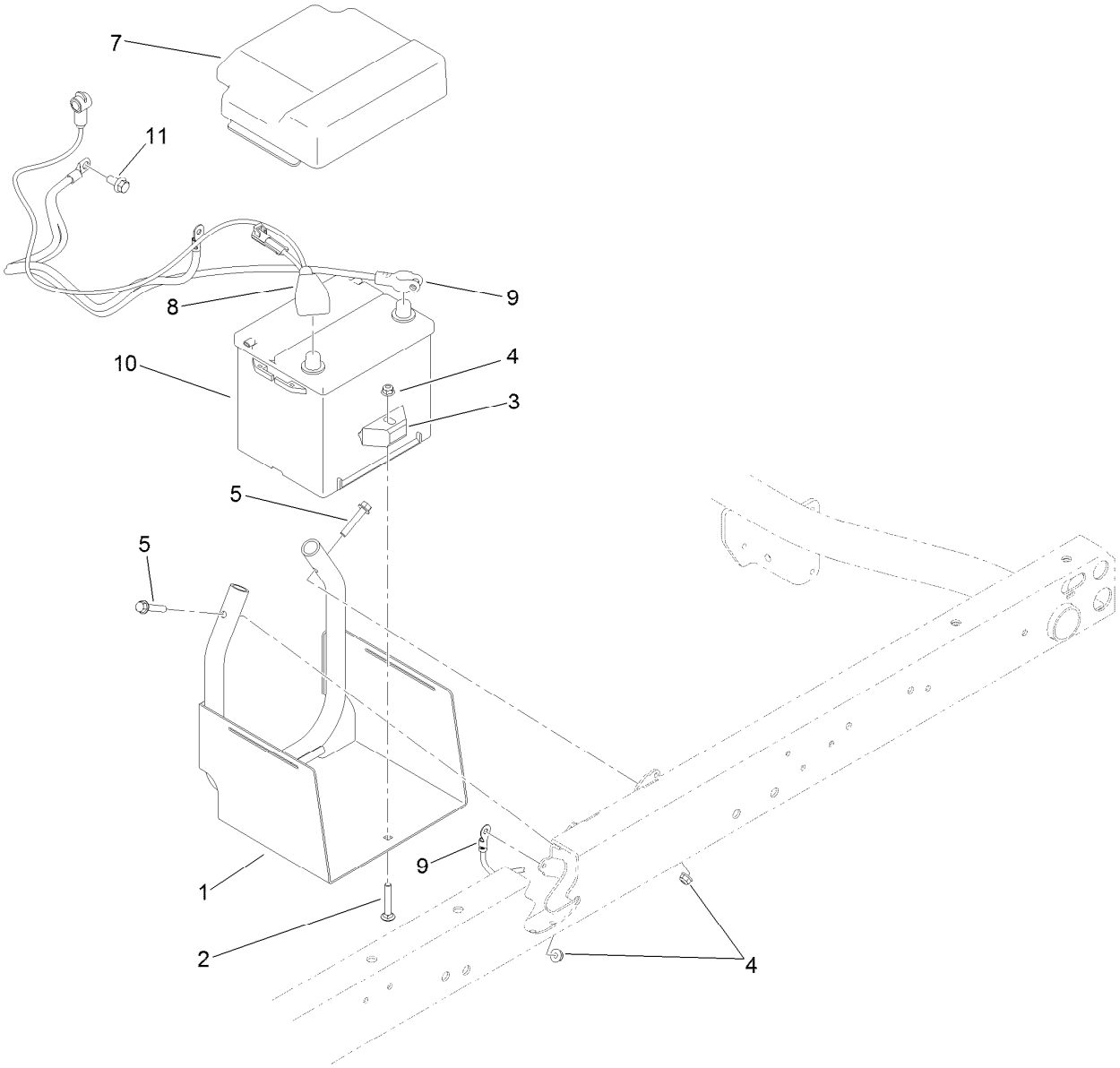

Battery Assembly

Ref.	Part Number	Qty.	Description
1	115-2237-03	1	Tray-Battery
2	3230-6	1	Bolt-CARR
3	138-6335	1	Retainer-Battery
4	104-8300	3	Nut-HF, NI
5	94-5780	2	Screw-HWH
7	119-9496	1	Cover-Battery
8	122-0281	1	Cable-Battery, Positive
9	122-1024	1	Cable-Battery, Negative
10	106-5187	1	Battery, 525 CCA W/O Electrolyte
11	120-4839	1	Screw-HHF

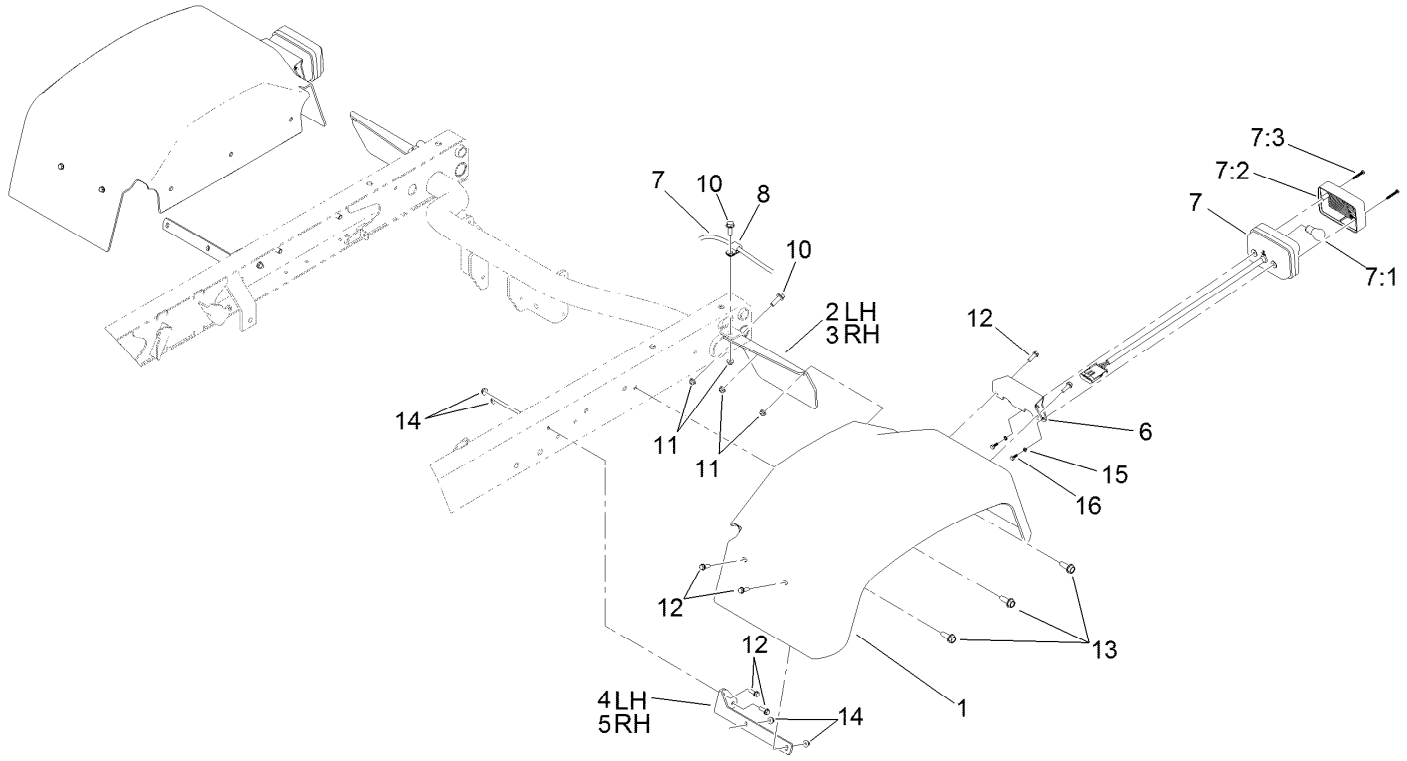

Tail Light and Fender Assembly

Ref.	Part Number	Qty.	Description
1	132-6701	2	Fender-Rear
2	93-8943-03	1	Bracket-Fender, Rear (LH)
3	93-8944-03	1	Bracket-Fender, Rear (RH)
4	93-8941-03	1	Bracket-Fender, Front (LH)
5	93-8942-03	1	Bracket-Fender, Front (RH)
6	121-6269-03	2	Bracket-Light, Tail
7	120-4820	2	Light-Tail, Brake
7:1	115-7858	1	Bulb-7528
7:2	121-6271	1	Lens-Light, Tail

Ref.	Part Number	Qty.	Description
7:3	121-6272	2	Screw-PPH
8	2412-93	2	Clamp-R
10	3234-17	4	Screw-HHF
11	104-8300	4	Nut-HF, NI
12	32105-15	12	Screw-HWH
13	105-6245	6	Screw-Tapping
14	104-7201	12	Nut-HF
15	43-5920	4	Washer-Lock, Spring
16	121-6320	4	Screw-HH

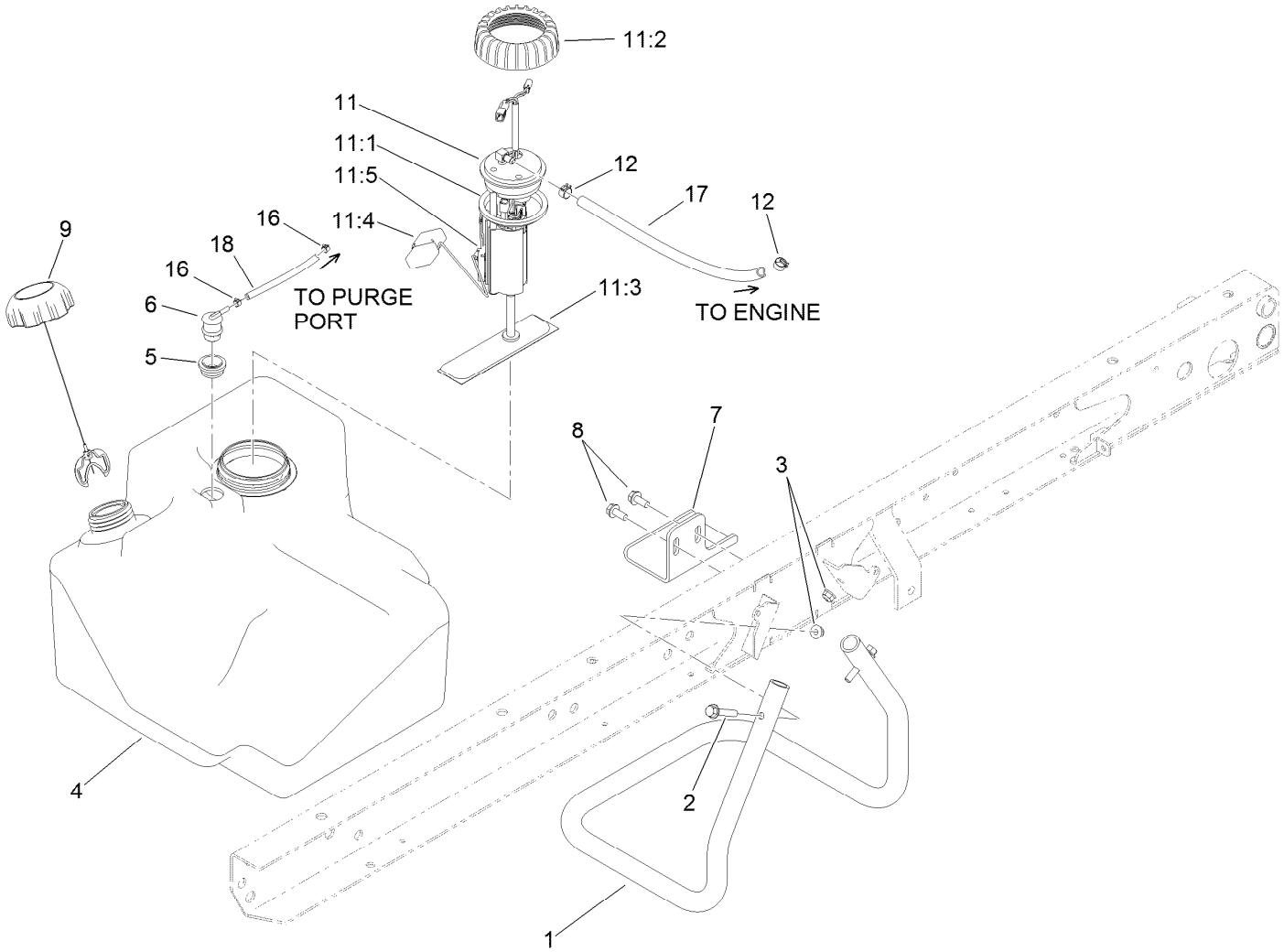

Fuel System Assembly

Ref.	Part Number	Qty.	Description
1	115-7767-03	1	Tube-Support
2	94-5780	2	Screw-HWH
3	104-8300	2	Nut-HF, NI
4	115-7700	1	Tank-Fuel
5	114-0284	1	Grommet
6	114-0285	1	Valve-Rollover
7	114-8404	1	Plate-Retainer
8	32144-70	2	Screw-HWHTF
9	137-4127	1	Cap-Fuel
11	115-2399	1	Pump-Fuel

Ref.	Part Number	Qty.	Description
11:1	115-2163	1	Gasket-Pump, Fuel
11:2	115-2162	1	Cap-Pump, Fuel
11:3	115-7818	1	Fuel Filter ASM
11:4	120-4812	1	Float
11:5	127-8691	1	Sender-Fuel Level
12	92-2379	2	Clamp-Hose
16	2412-146	2	Clamp-Hose
17	109-0287	1	Hose-Fuel
18	110-3254	1	Hose-Fuel

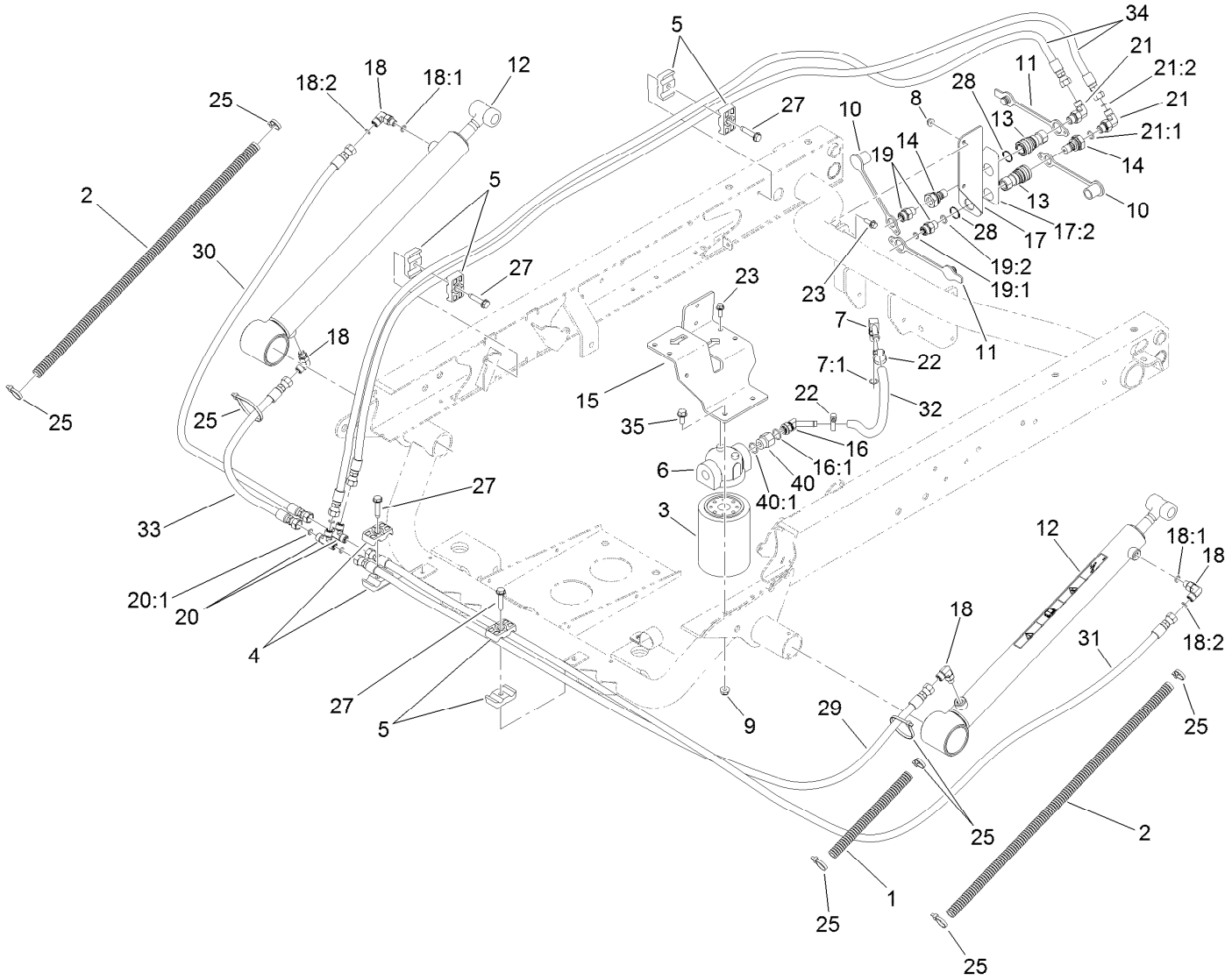

Hydraulic Lift Cylinder Assembly

Ref.	Part Number	Qty.	Description
1	24-7922	1	Conduit-Convoluted, Split
2	24-7923	2	Conduit-Convoluted, Split
3	54-0110	1	Filter-Oil, Transmission
4	56-7971	2	Clamp-Tube
5	56-7976	6	Clamp-Tube
6	87-8780	1	Head-Filter
7	100-4887	1	Fitting-Elbow, 90
7:1	237-42	1	O-Ring
8	104-7201	2	Nut-HF
9	104-8300	2	Nut-HF, NI
10	106-7881	2	Cap-Dust, HYD
11	106-7882	2	Plug-Dust, HYD
12	133-0620	2	HYD Cylinder ASM
13	106-7968	2	Coupler-Quick, Female
14	106-7969	2	Coupler-Quick, Male
15	115-2168-03	1	Bracket-Filter
16	103-1807	1	Fitting-Barbed, 45 DEG
16:1	237-42	1	O-Ring
17	139-4530	1	Coupler Bracket ASM
17:2	115-7723	1	Decal-Disconnect, Quick
18	340-132	4	Fitting-Elbow, 90 DEG

Ref.	Part Number	Qty.	Description
18:1	237-78	1	O-Ring
18:2	237-21	1	O-Ring
19	340-2	2	Fitting-Straight
19:1	237-22	1	O-Ring
19:2	237-42	1	O-Ring
20	340-21	2	Fitting
20:1	237-21	3	O-Ring
21	340-82	2	Fitting-Elbow, 90 DEG
21:1	237-42	1	O-Ring
21:2	237-21	1	O-Ring
22	2412-36	2	Clamp-Hose
23	3234-4	4	Screw-HHF
25	3290-379	6	Tie-Cable
27	32144-57	4	Screw
28	32151-83	2	Ring-Snap
29	115-7711	1	Hose-HYD
30	108-6508	1	Hose-HYD
31	104-3716	1	Hose-HYD
32	115-2228	1	Hose-HYD
33	110-0931	1	Hose-HYD
34	106-3680	2	Hose-HYD

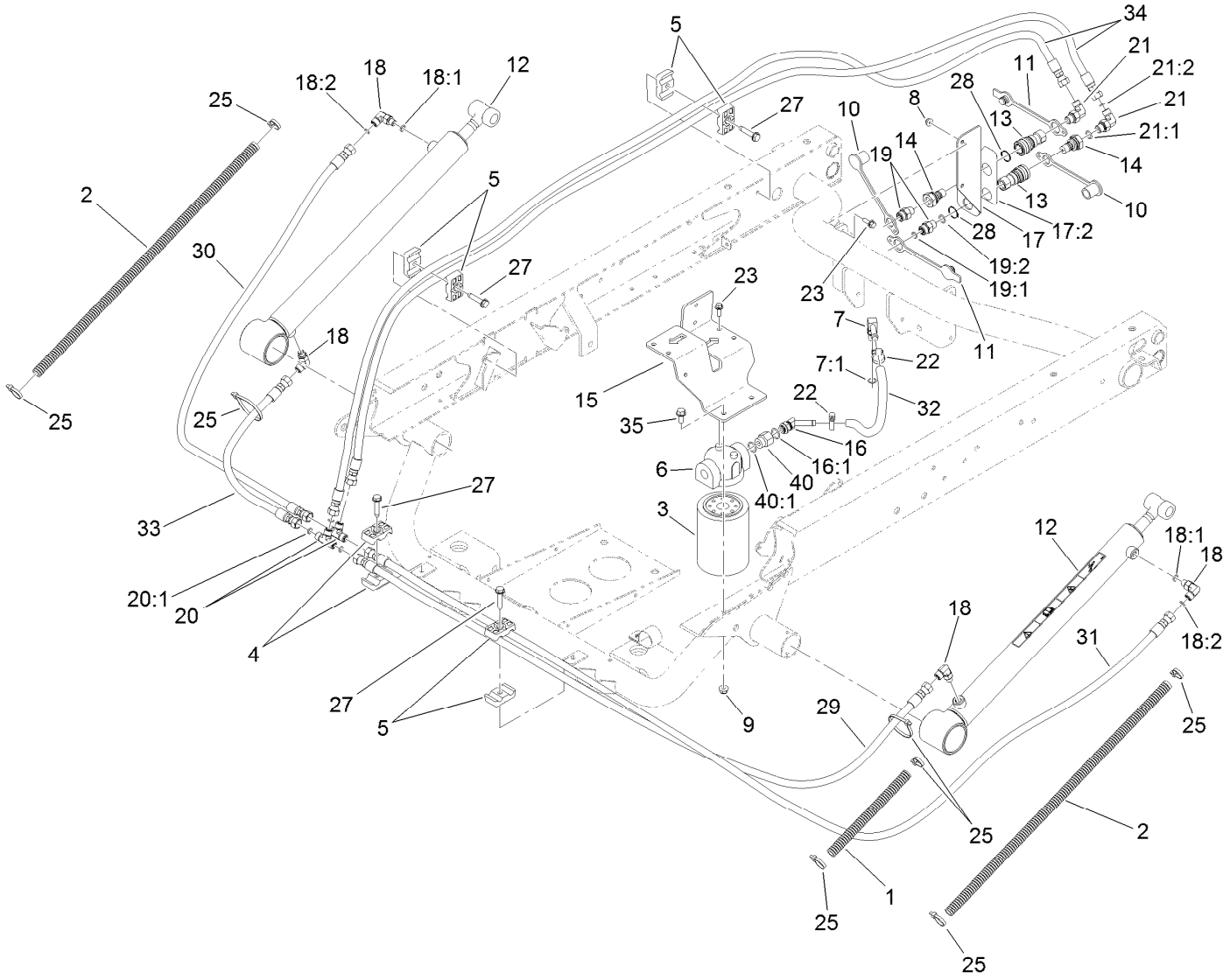

Hydraulic Lift Cylinder Assembly (continued)

Ref.	Part Number	Qty.	Description
35	3234-5	2	Screw-HHF

Ref.	Part Number	Qty.	Description
40	353-397	1	Reducer-Adapter
40:1	237-79	1	O-Ring

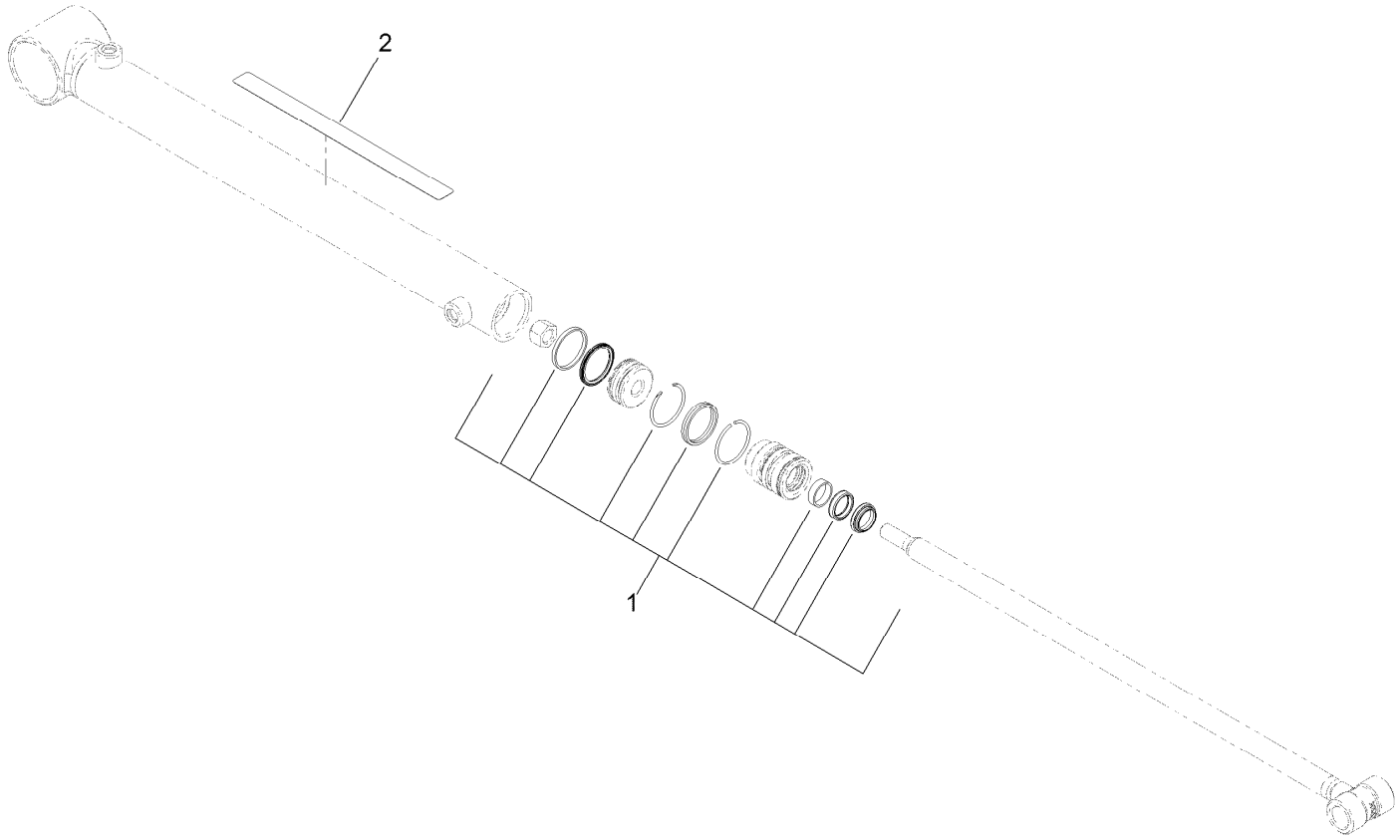

Hydraulic Cylinder Assembly No. 133-0620

Ref.	*Part Number*	*Qty.*	*Description*
1	133-0618	1	Cylinder Seal Kit
2	93-9852	1	Decal-Warning

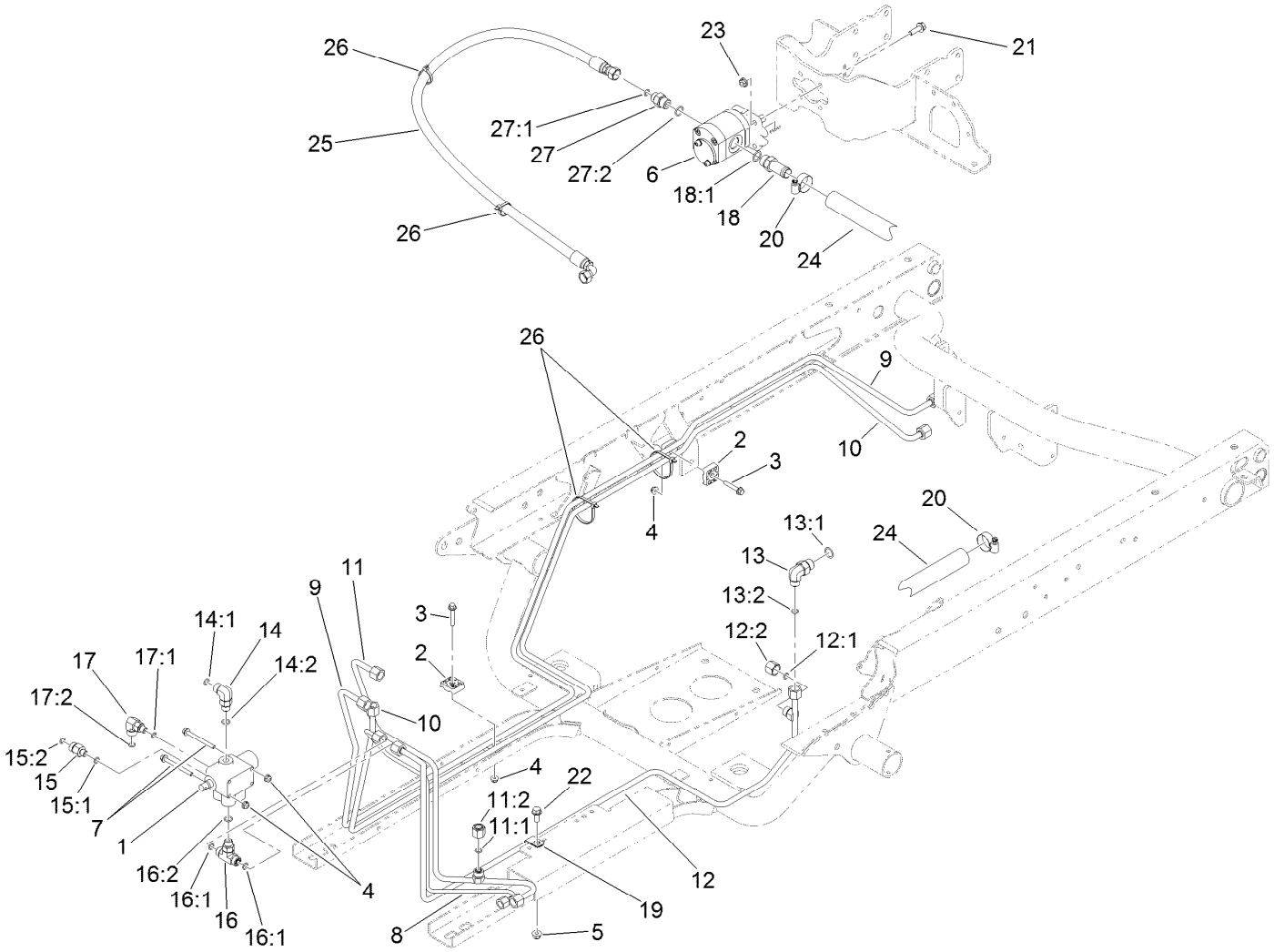

Main Hydraulic Pump and Lift Valve Assembly

Ref.	Part Number	Qty.	Description
1	43-1950	1	HYD Control Valve ASM
2	56-7973	4	Clamp-Tube
3	94-5781	2	Screw-HHF
4	104-7201	4	Nut-HF
5	104-8300	1	Nut-HF, NI
6	114-8302	1	HYD Pump ASM
7	114-8410	2	Screw-HHF
8	127-8605	1	Tube-HYD
9	115-2217	1	Tube-HYD
10	115-2218	1	Tube-HYD
11	127-8604	1	Tube-HYD
11:1	237-22	1	O-Ring
11:2	340-117	1	Cap
12	127-8752	1	Tube-HYD
12:1	237-22	1	O-Ring
12:2	340-117	1	Cap
13	340-18	1	Fitting-HYD, 90 DEG
13:1	237-79	1	O-Ring
13:2	237-22	1	O-Ring
14	340-77	1	Fitting-Elbow, 90 DEG
14:1	237-22	1	O-Ring

Ref.	Part Number	Qty.	Description
14:2	237-42	1	O-Ring
15	340-88	1	Fitting-Straight
15:1	237-22	1	O-Ring
15:2	237-78	1	O-Ring
16	340-94	1	Adapter
16:1	237-22	2	O-Ring
16:2	237-42	1	O-Ring
17	340-97	1	Fitting-Elbow, 90 DEG
17:1	237-22	1	O-Ring
17:2	237-78	1	O-Ring
18	354-136	1	Fitting-STR
18:1	237-80	1	O-Ring
19	2412-113	1	Clamp-R
20	2412-129	2	Clamp-Hose
21	3234-17	4	Screw-HHF
22	3234-5	1	Screw-HHF
23	32128-20	4	Nut-HF
24	87-3670	1	Hose-Suction
25	121-6283	1	Hose-HYD
26	3290-379	4	Tie-Cable
27	340-3	1	Fitting-Straight

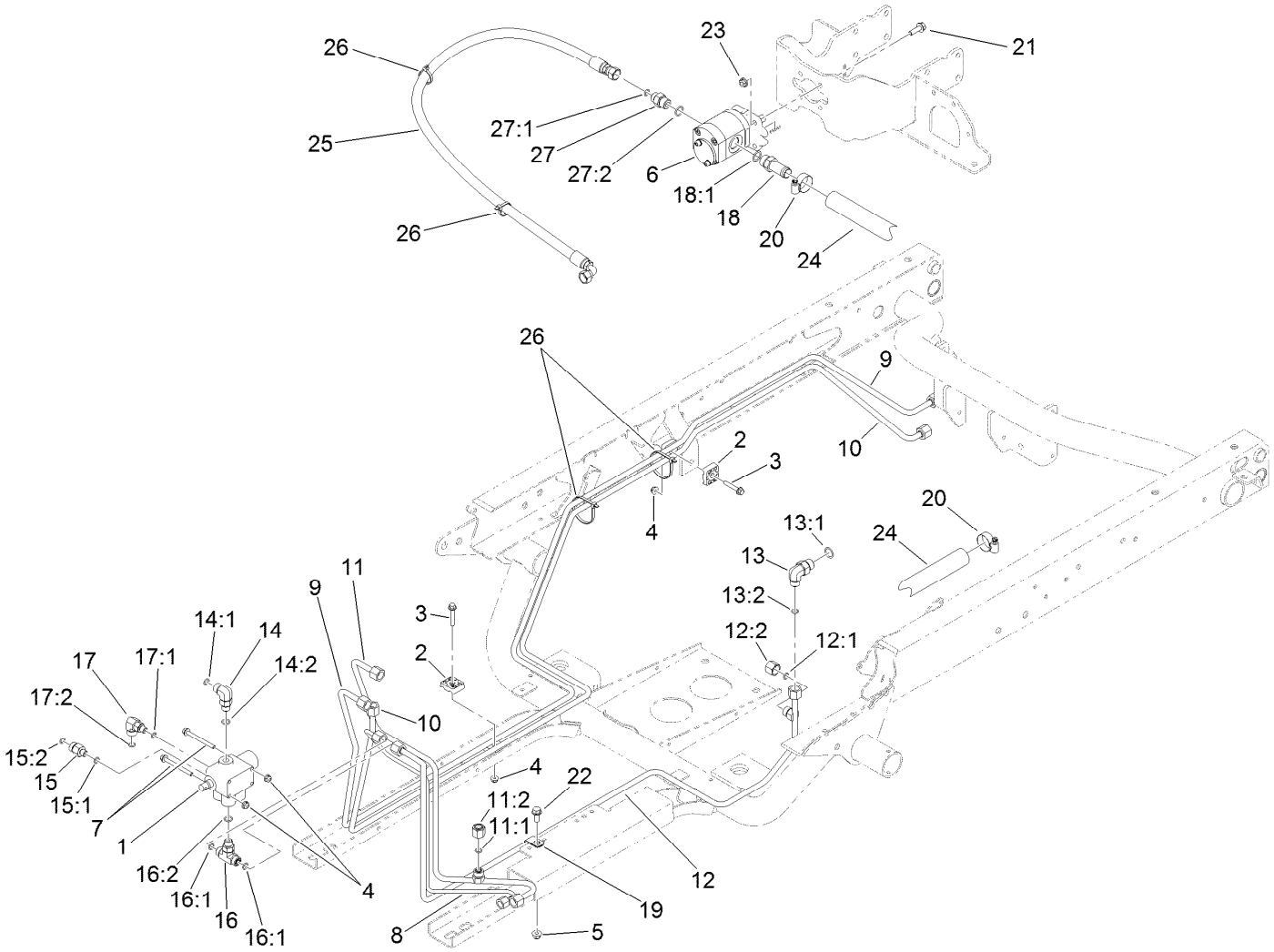

Main Hydraulic Pump and Lift Valve Assembly (continued)

Ref.	*Part Number*	*Qty.*	*Description*
27:1	237-22	1	O-Ring
27:2	237-79	1	O-Ring

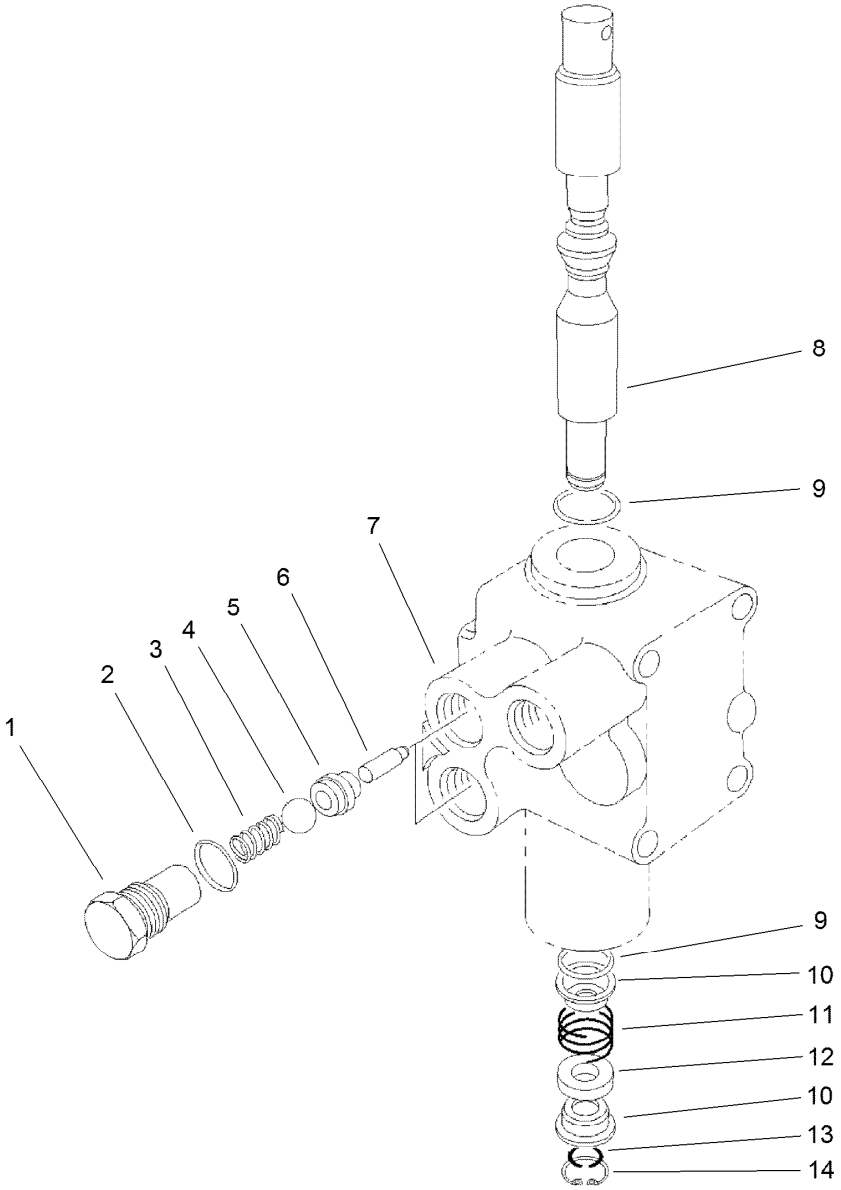

Control Valve Assembly No. 43-1950

Ref.	Part Number	Qty.	Description
1	22-8330	2	Plug
2	237-42	2	O-Ring
3	22-8340	2	Spring
4	22-8350	2	Ball
5	22-8370	2	Seat-Valve
6	22-8360	2	Pin
7		1	Body ●
8	22-8420	1	Spool
9	22-8500	2	O-Ring
10	22-8380	2	Retainer
11	22-8410	1	Spring
12	23-3030	1	Spacer
13	22-8480	1	Ring-Snap
14	22-8490	1	Ring-Snap

● Not serviced separately

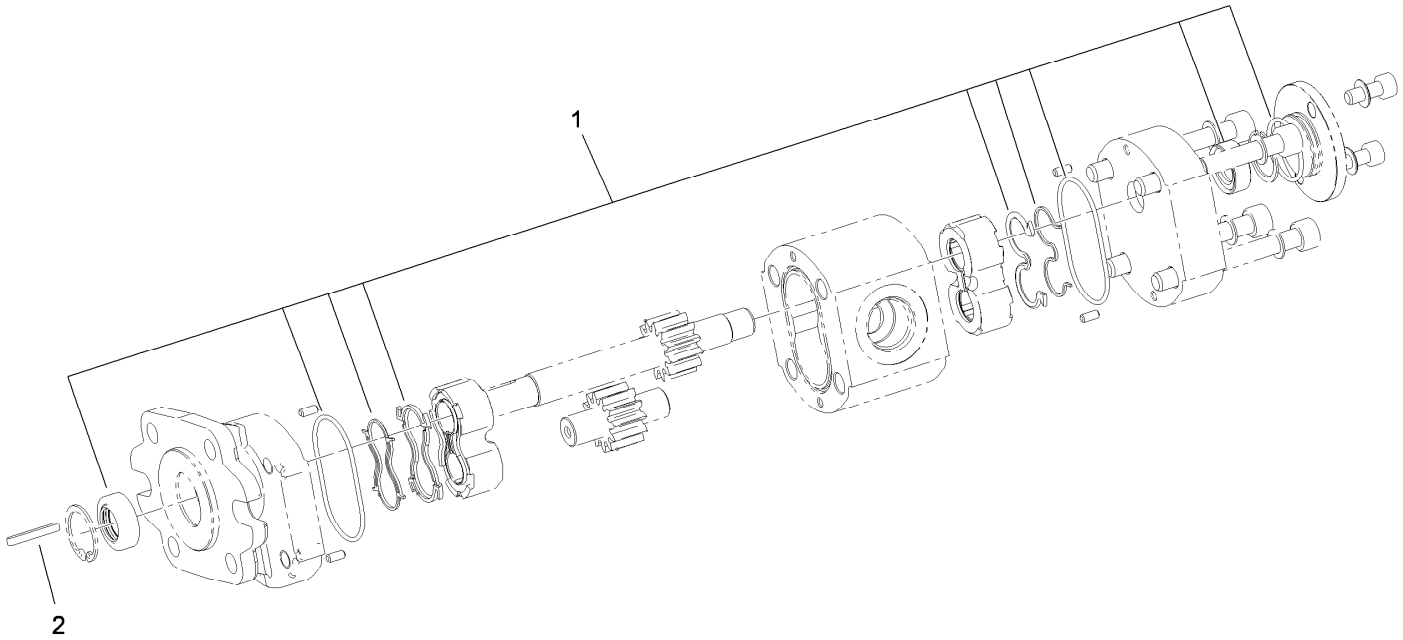

Hydraulic Gear Pump Assembly No. 114-8302

Ref.	*Part Number*	*Qty.*	*Description*
1	115-8696	1	Seal Kit
2	115-7855	1	Key-Square

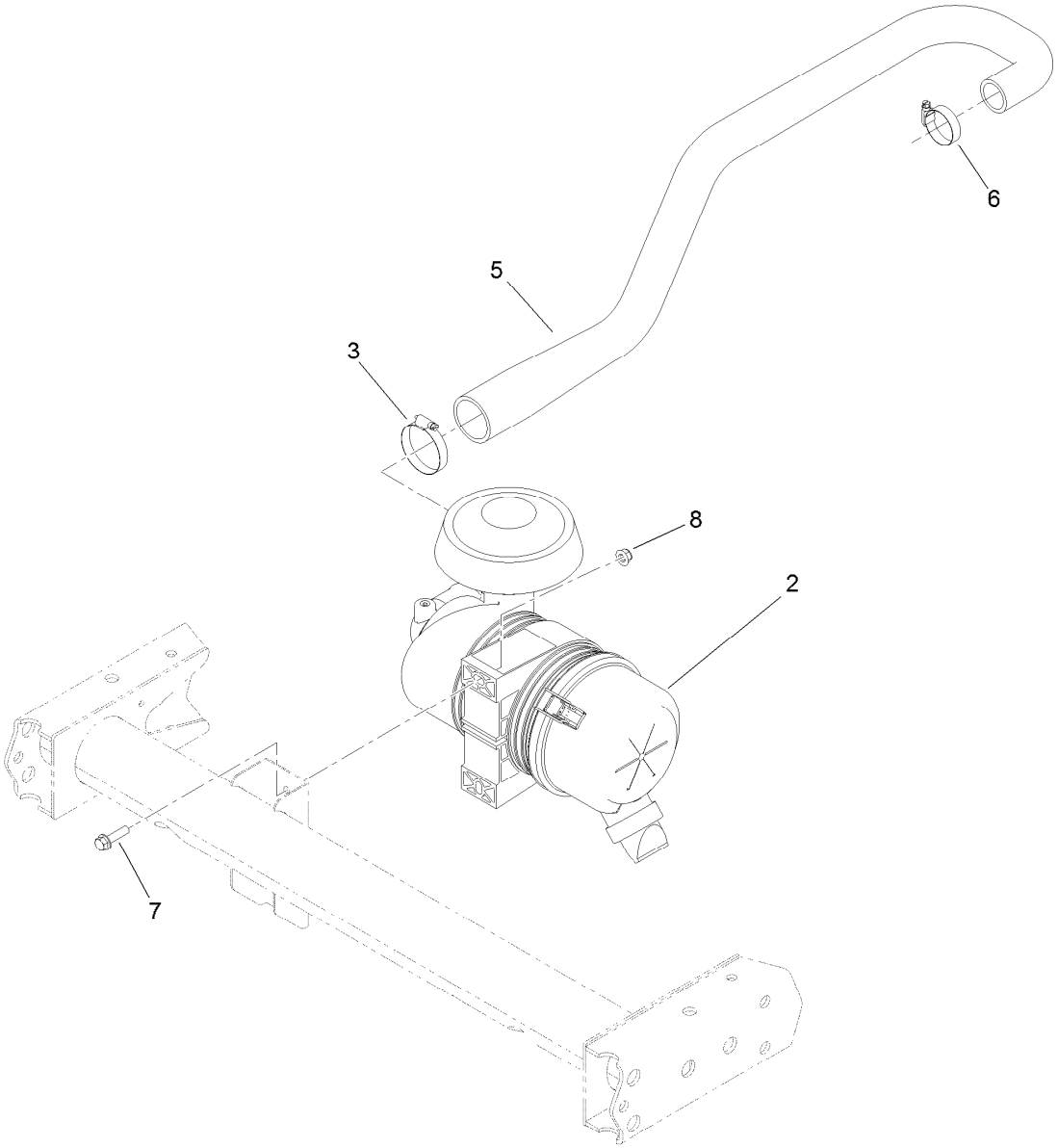

Air Cleaner Assembly

Ref.	Part Number	Qty.	Description
2	138-5650	1	Air Cleaner ASM
3	2412-130	1	Clamp-Hose
5	120-5098	1	Hose-Intake, Air
6	2412-3	1	Clamp-Hose
7	3234-36	2	Screw-HHF
8	104-8300	2	Nut-HF, NI

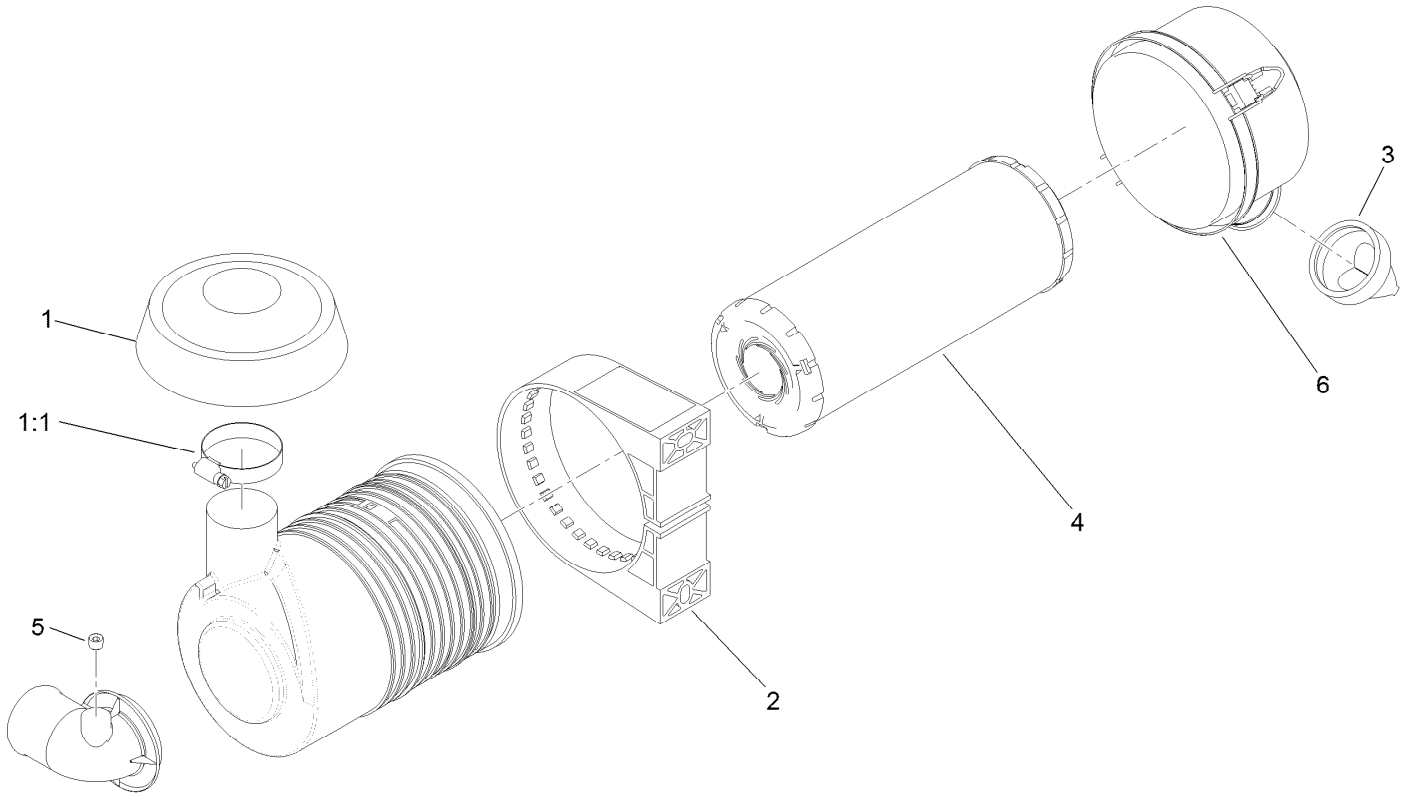

Air Cleaner Assembly No. 138-5650

Ref.	*Part Number*	*Qty.*	*Description*
1	139-0686	1	Rain Cap ASM
1:1	2412-130	1	Clamp-Hose
2	98-4525	1	Bracket-Cleaner, Air
3	87-9400	1	Valve-Vacuator
4	108-3810	1	Filter-Air
5	285-17	1	Plug-Pipe
6	98-9771	1	Cover ASM

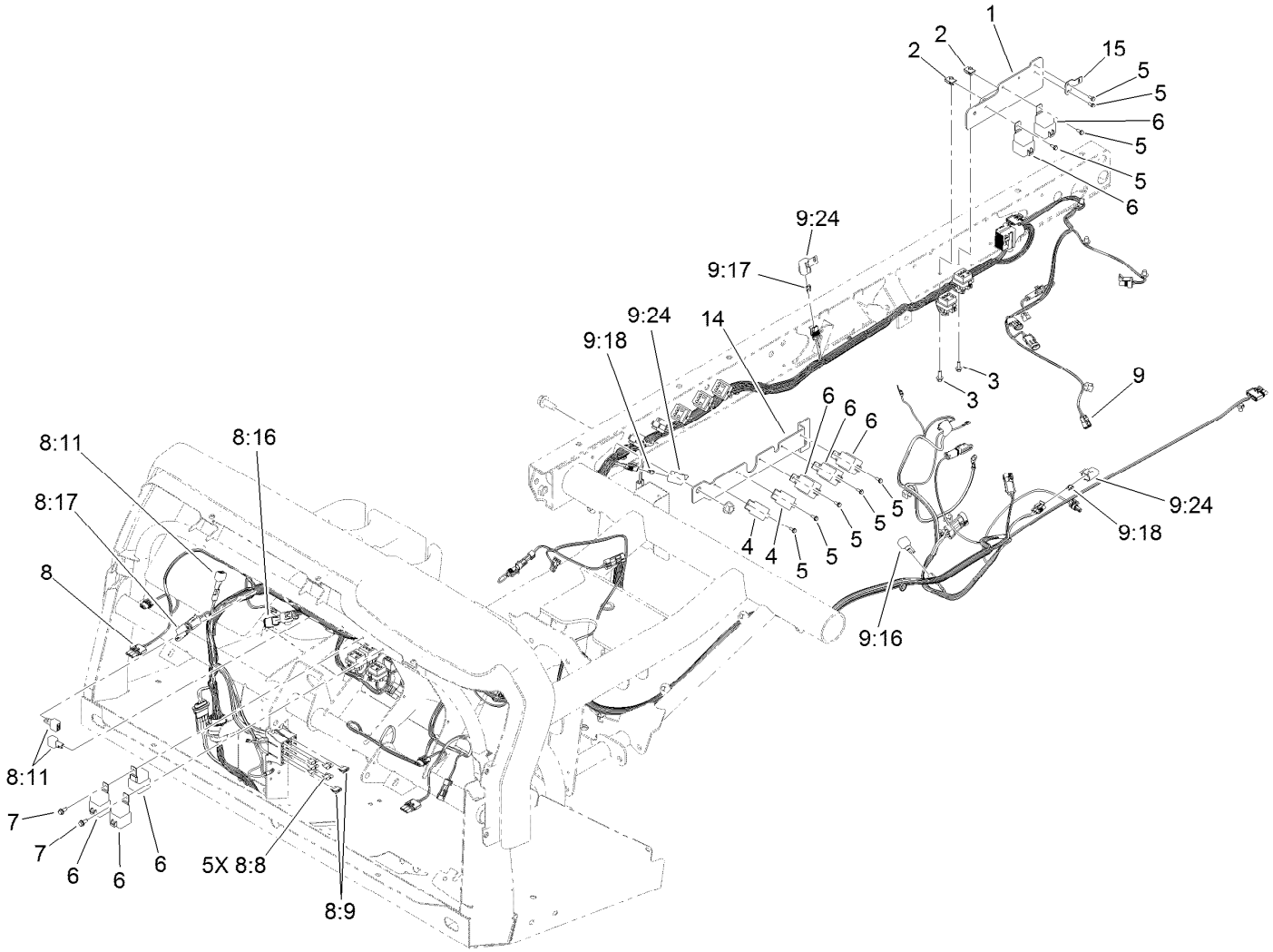

Front and Rear Wire Harness Assembly

Ref.	Part Number	Qty.	Description
1	132-6714-03	1	Bracket-Mount, Filter
2	107069	2	Clip
3	3234-4	2	Screw-HHF
4	99-7435	2	Relay
5	32144-112	9	Screw-HWH
6	99-7430	8	Relay-Mini
7	32144-10	2	Screw-HWH
8	122-1448	1	Harness-Wire, Front
8:8	218-578	5	Fuse-Blade, 10 Amp
8:9	109355	2	Fuse-Blade, 15 Amp

Ref.	Part Number	Qty.	Description
8:11	100-4918	3	Diode
8:16	32180-106	1	Resistor-220K
8:17	32180-156	1	Cap-Plug, 6 Way
9	122-0889	1	Harness-Wire, Rear
9:16	100-4918	1	Diode
9:17	121-8867	1	Fuse-Mini Blade, 15 Amp
9:18	121-8870	2	Fuse-Mini Blade, 30 Amp
9:24	32180-101	3	Cover-Fuse, Single
14	132-6713-03	1	Bracket-Mount, Relay
15	132-6716	1	Mount-Harness, Engine

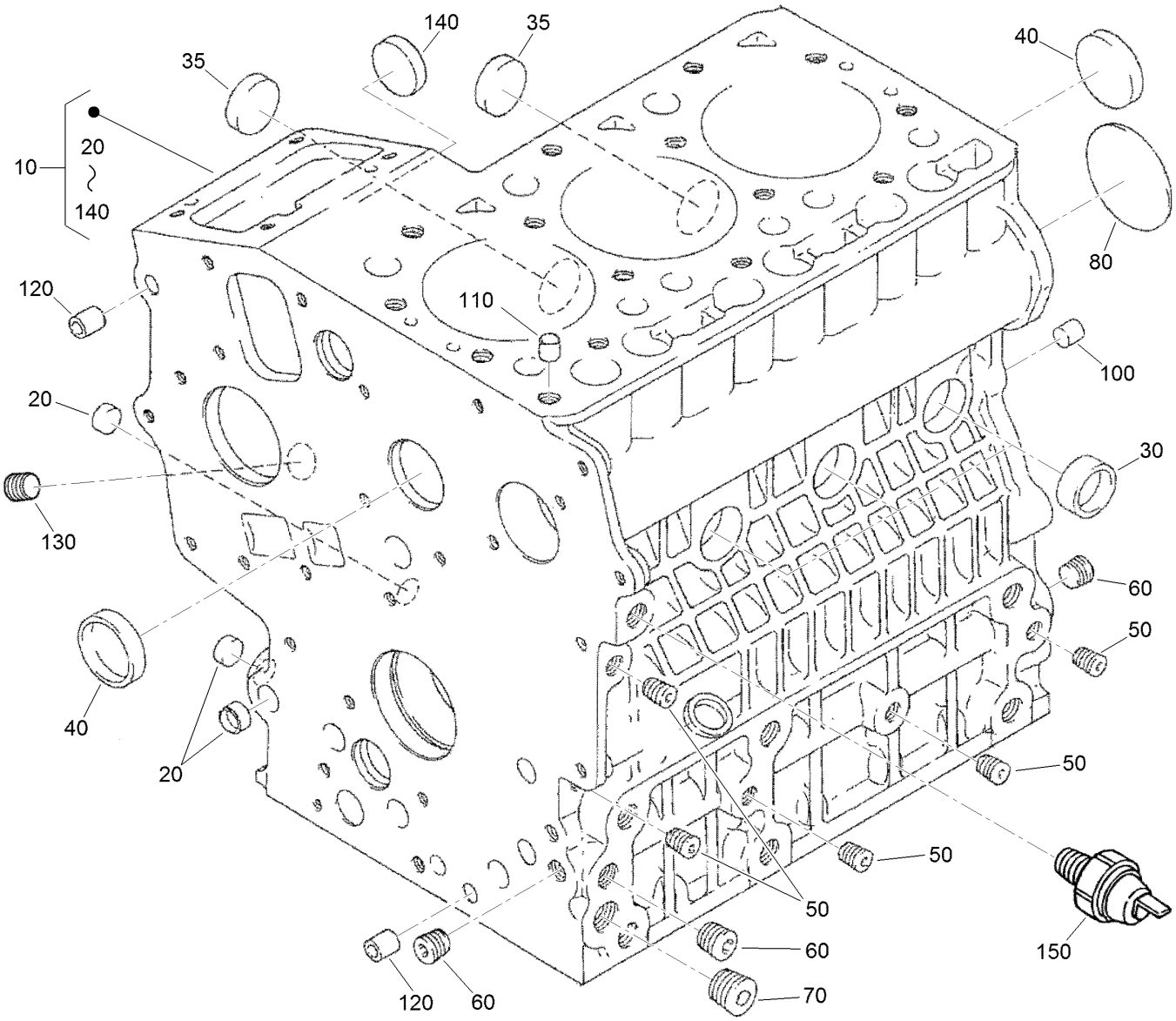

Crankcase Assembly

Ref.	Part Number	Qty.	Description
10	125-9060	1	Crankcase ASM
20	100-2019	3	Cap-Sealing
30	100-2020	3	Cap-Sealing
35	110-3702	2	Cap-Sealing
40	98-9398	2	Cap-Sealing
50	98-9687	5	Plug
60	98-7487	3	Plug
70	98-7488	1	Plug
80	100-1851	1	Plug-Expansion
100	98-9377	2	Pin-Straight
110	98-7506	1	Pin-Pipe
120	100-2051	2	Pin-Pipe
130	98-7488	1	Plug
140	100-1991	1	Cover-Fuel, Camshaft
150	98-9416	1	Switch-Oil

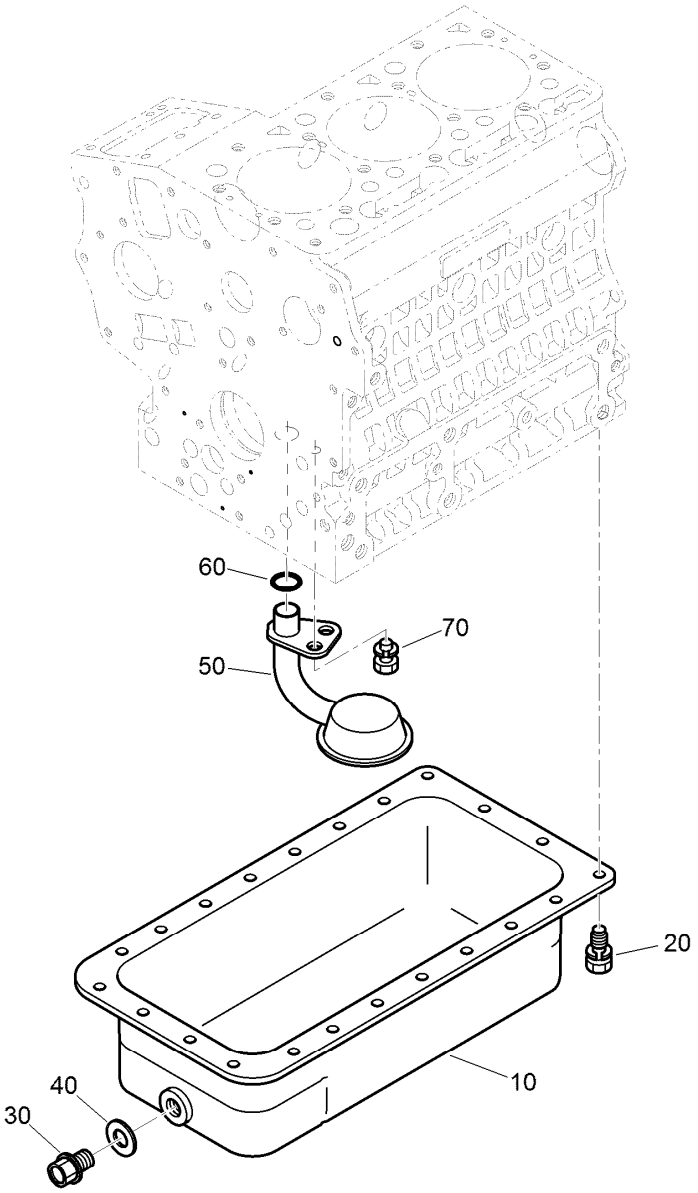

Oil Pan Assembly

Ref.	Part Number	Qty.	Description
10	125-9056	1	Oil Pan ASM
20	98-9350	22	Bolt
30	114-8151	1	Plug-Drain
40	98-7524	1	Gasket
50	125-9052	1	Tube-Pick Up, Oil
60	105-3776	1	O-Ring
70	100-9195	1	Bolt

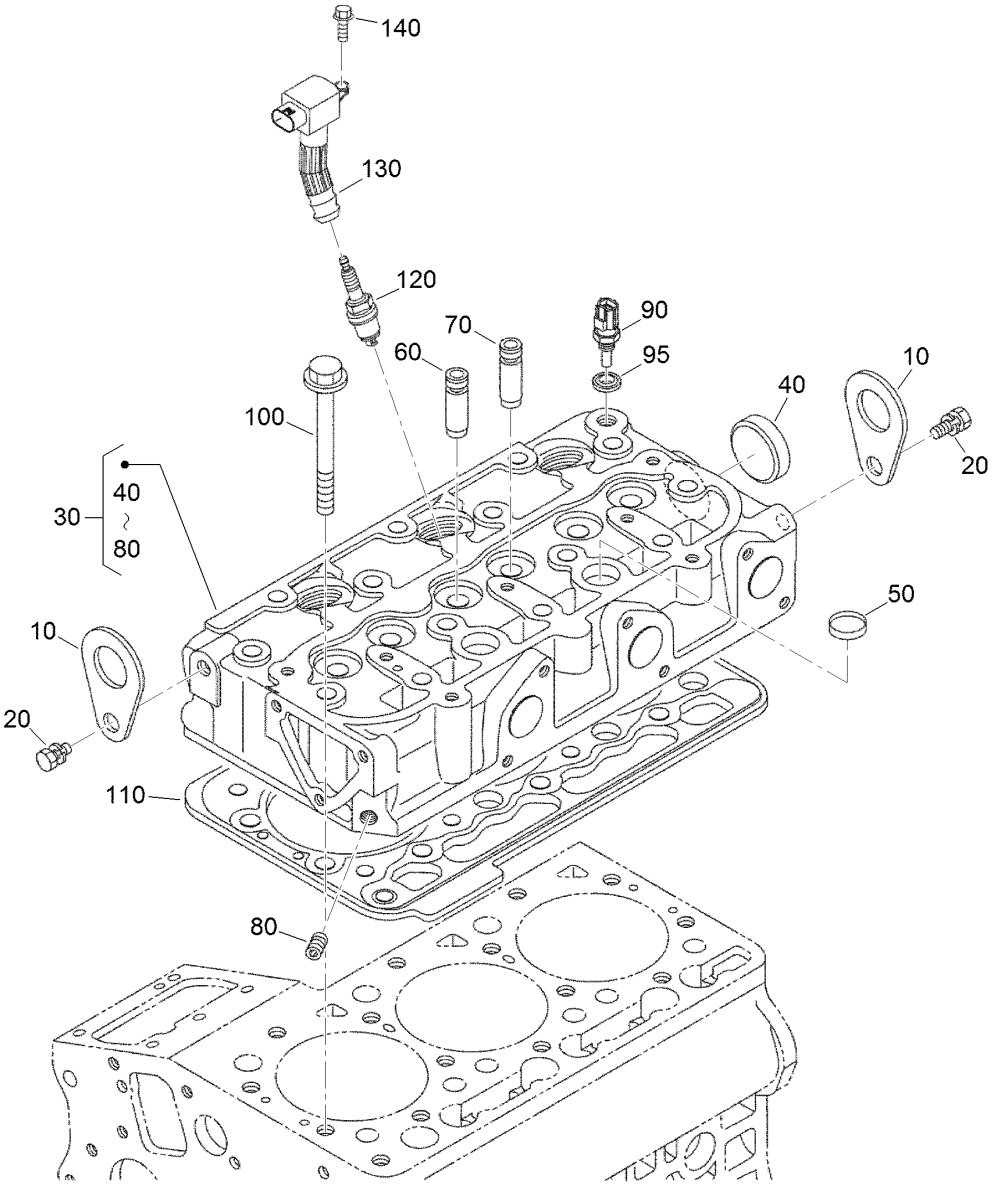

Cylinder Head Assembly

Ref.	Part Number	Qty.	Description
10	98-7531	2	Hook-Engine
20	98-7526	2	Bolt
30	125-9119	1	Cylinder Head ASM
40	105-3705	1	Cap-Sealing
50	98-9389	2	Cap-Sealing
60	100-1882	3	Guide-Valve, Inlet
70	100-1883	3	Guide-Valve, Exhaust
80	98-9687	1	Plug
90	125-9102	1	Sensor-Temperature, Water
95	125-9096	1	Gasket
100	100-1820	14	Bolt-Head, Cylinder
110	125-9113	1	Gasket-Head
120	125-9139	3	Spark Plug
130	125-9145	3	Coil-Ignition
140	99-8363	3	Bolt-Flange

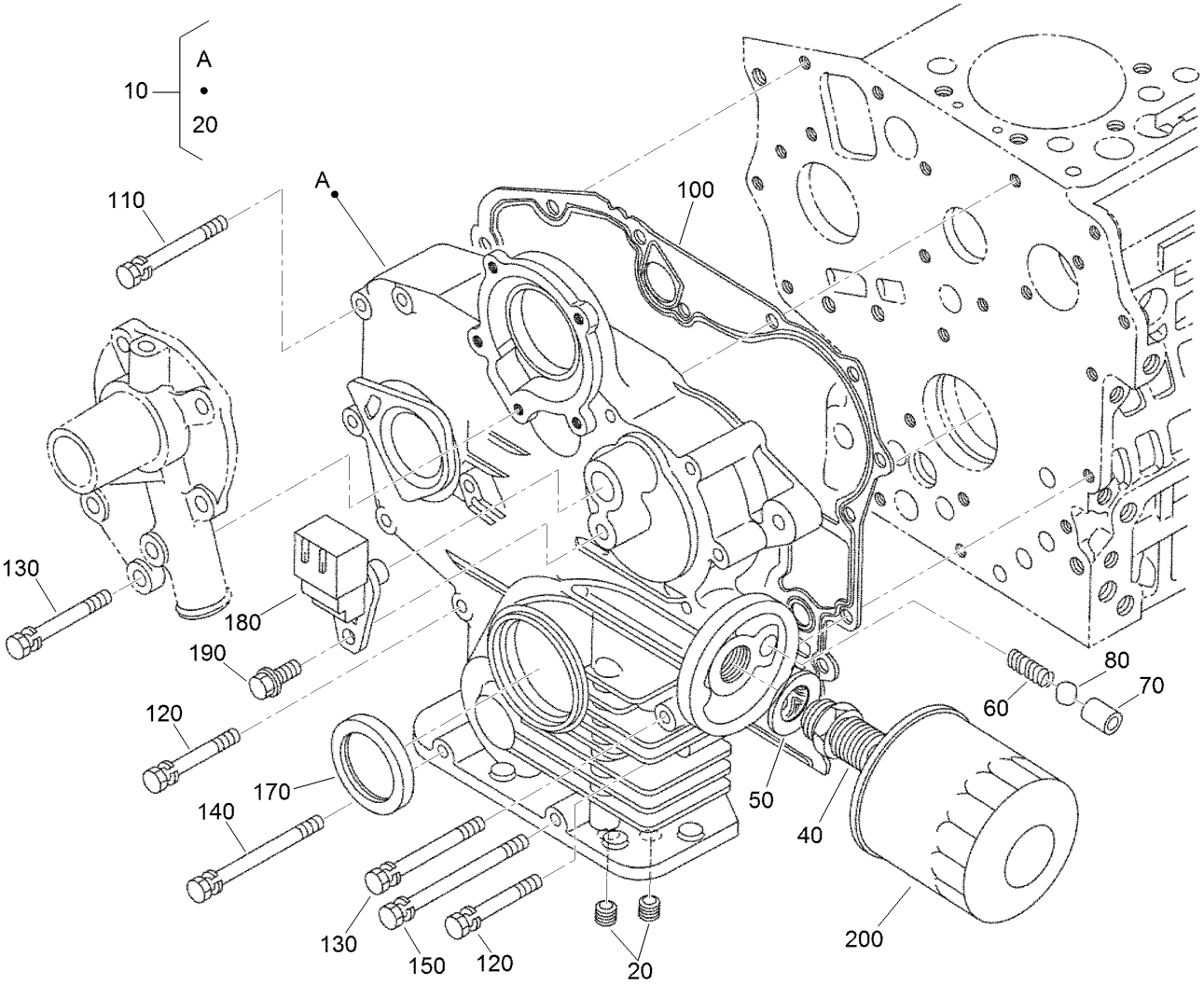

Gear Case and Oil Filter Cartridge Assembly

Ref.	Part Number	Qty.	Description
10	125-9151	1	Gear Case ASM
20	98-7488	2	Plug
40	98-9388	1	Joint-Pipe
50	100-1926	1	Washer-Plain
60	100-2004	1	Spring
70	100-1894	1	Seat-Valve
80	100-1792	1	Ball
100	117-0327	1	Gasket-Case, Gear
110	99-8320	1	Bolt

Ref.	Part Number	Qty.	Description
120	98-9356	10	Bolt
130	100-1922	2	Bolt
140	98-9357	1	Bolt
150	110-3710	1	Bolt
170	120-7852	1	Seal-Oil
180	125-9142	1	Sensor
190	99-8363	1	Bolt-Flange
200	115-8189	1	Filter-Oil, Engine

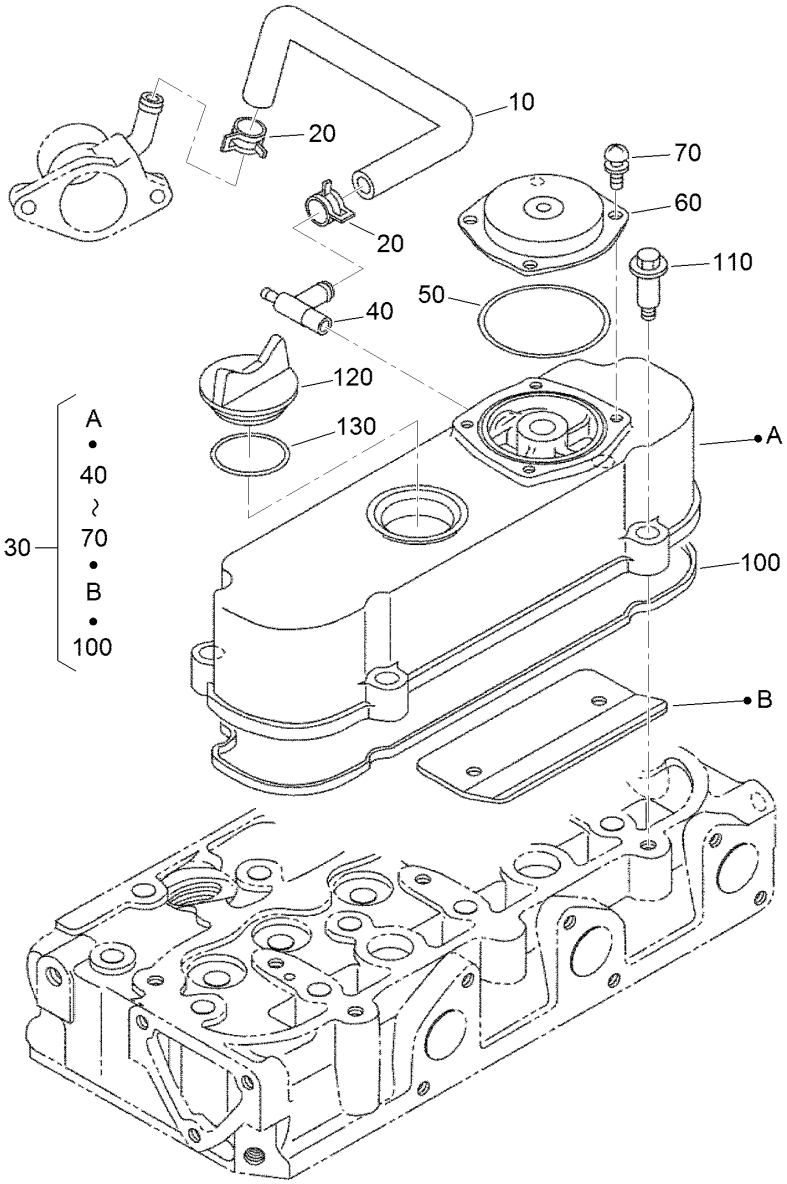

Cylinder Head Cover Assembly

Ref.	Part Number	Qty.	Description
10	125-9120	1	Tube-Breather
20	98-9579	2	Band-Pipe
30	125-9129	1	Cylinder Head Cover ASM
40	125-9117	1	Pipe-Breather
50	110-3846	1	O Ring-Breather
60	108-7060	1	Cover-Breather
70	98-9364	4	Screw (With Washer)
100	125-9130	1	Gasket-Cover, Head
110	108-7063	4	Bolt
120	107-9075	1	Plug-Filler, Oil
130	99-3446	1	O-Ring

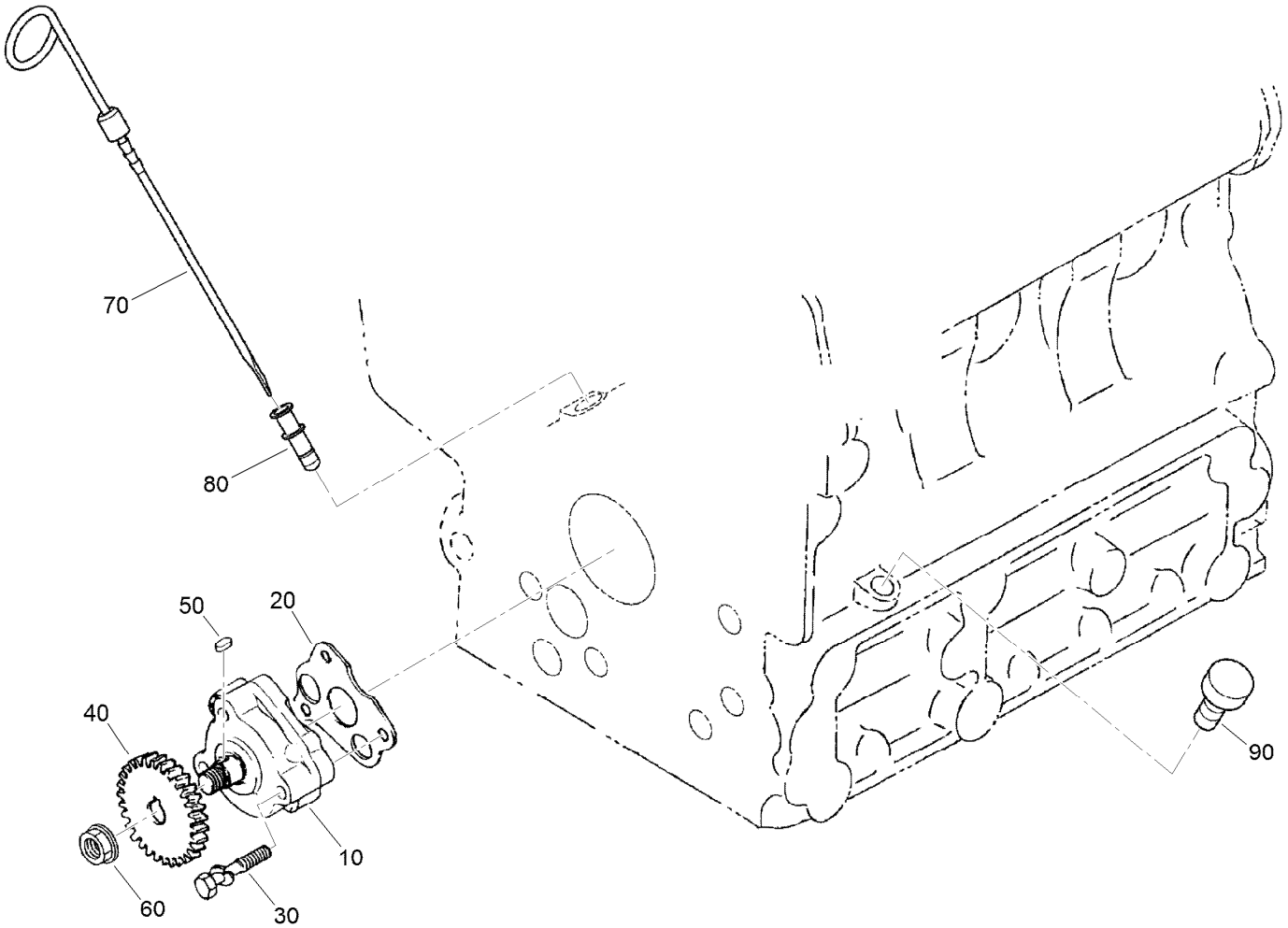

Dipstick, Guide and Oil Pump Assembly

Ref.	*Part Number*	*Qty.*	*Description*
10	100-2002	1	Oil Pump ASM
20	100-2003	1	Gasket-Pump, Oil
30	100-1923	3	Bolt
40	130-1419	1	Gear-Drive, Oil Pump
50	98-7658	1	Key-Feather
60	100-1779	1	Nut-Flange
70	110-3719	1	Gauge-Oil
80	105-4580	1	Guide-Gauge, Oil
90	110-3720	1	Plug-Gauge, Oil

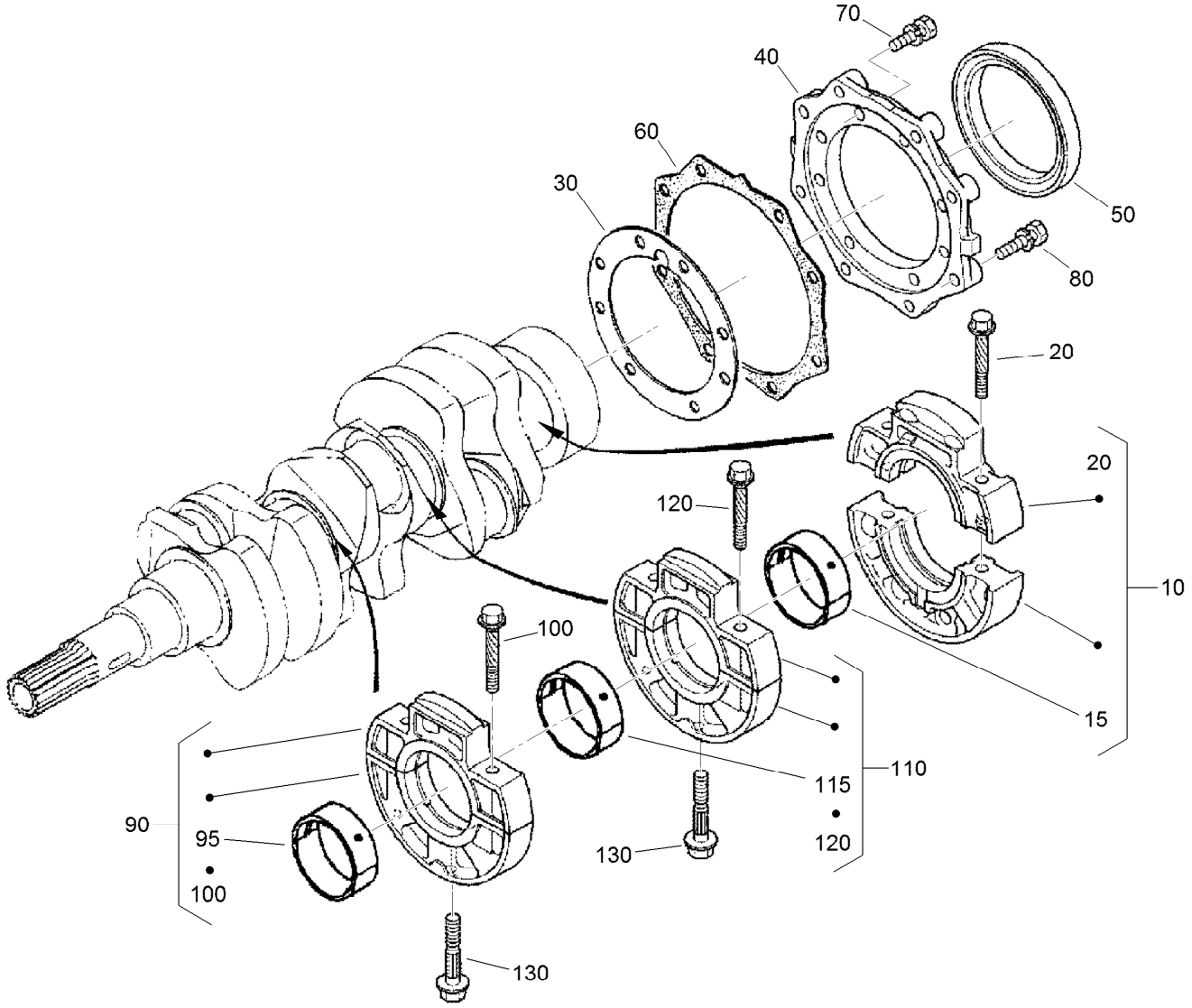

Main Bearing Case Assembly

Ref.	Part Number	Qty.	Description
10	121-2426	1	Bearing Case Wheel ASM
15	110-3744	1	Crankshaft Metal ASM (STD)
15	110-3745	1	Crankshaft Metal ASM (-0.20Mm)
15	110-3746	1	Crankshaft Metal ASM (-0.40Mm)
20	110-3723	2	Bolt-Case, Bearing
30	100-1873	1	Gasket-Case, Bearing
40	112-8334	1	Cover-Case, Bearing
50	110-3724	1	Seal-Oil
60	100-1876	1	Gasket-Cover, Case
70	98-7568	8	Bolt
80	100-1750	8	Bolt
90	110-3725	1	Main Bearing Case ASM
95	110-3741	1	Crankshaft Metal ASM (STD)
95	125-9083	1	Crankshaft Metal ASM (-0.20Mm)
95	110-3743	1	Crankshaft Metal ASM (-0.40Mm)
100	110-3723	2	Bolt-Case, Bearing
110	110-3725	1	Main Bearing Case ASM
115	110-3741	1	Crankshaft Metal ASM (STD)
115	125-9083	1	Crankshaft Metal ASM (-0.20Mm)
115	110-3743	1	Crankshaft Metal ASM (-0.40Mm)
120	110-3723	2	Bolt-Case, Bearing
130	100-1874	2	Bolt-Case, Bearing

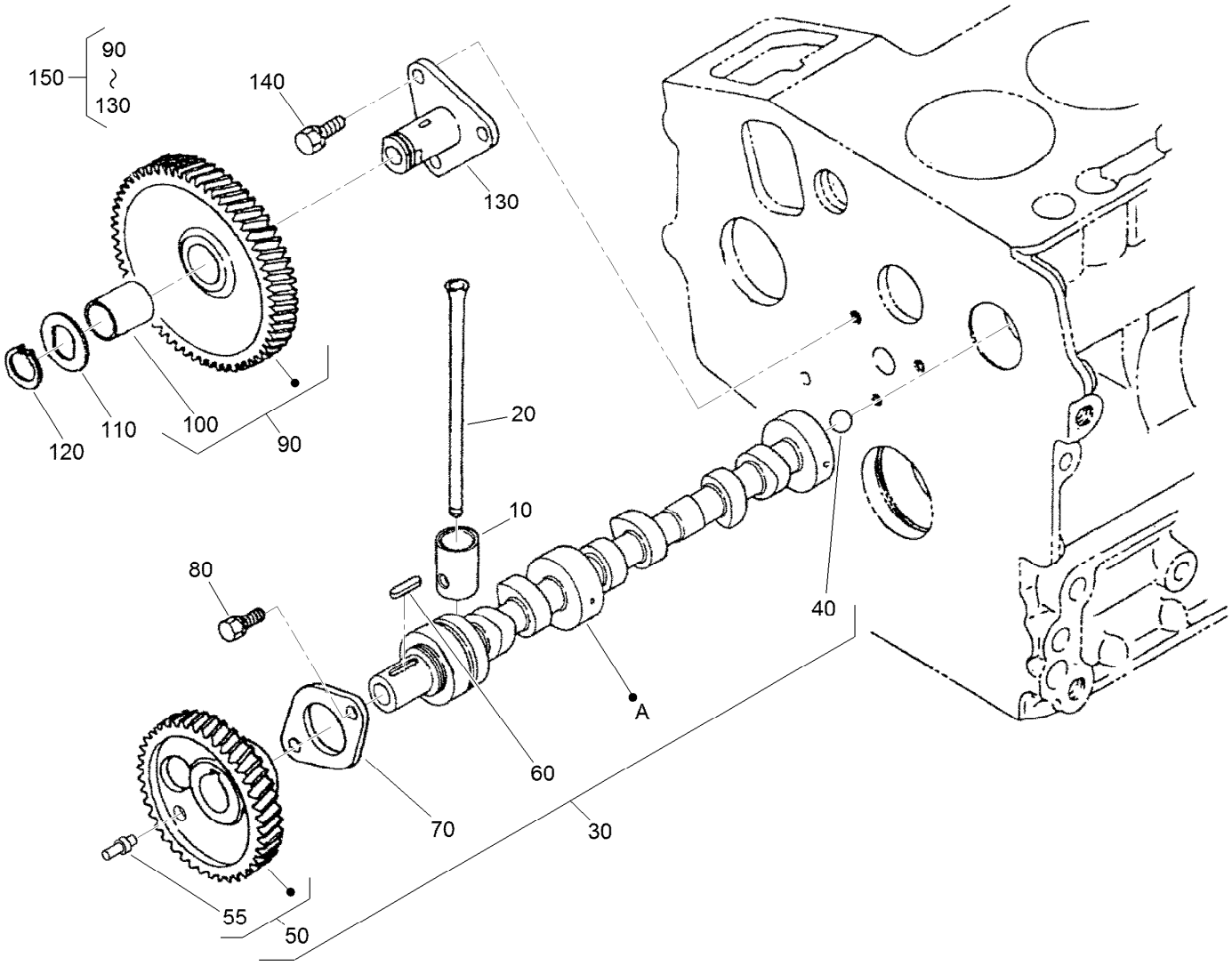

Cam Shaft and Idle Gear Shaft Assembly

Ref.	Part Number	Qty.	Description
10	110-3727	6	Tappet
20	100-1989	6	Rod-Push
30	125-9131	1	Camshaft ASM
40	110-3729	1	Ball
50	125-9132	1	Cam Gear ASM
55	125-9133	2	Pin-Gear, Cam
60	98-9378	1	Key-Feather
70	100-1887	1	Stopper-Camshaft

Ref.	Part Number	Qty.	Description
80	98-9350	2	Bolt
90	121-2421	1	Idle Gear ASM
100	121-2422	1	Bushing
110	100-1970	1	Collar-Gear, Idle
120	100-1969	1	Ring-Snap
130	100-1967	1	Shaft-Gear, Idle
140	100-1774	3	Bolt-Flange
150	100-2240	1	Idle Gear ASM

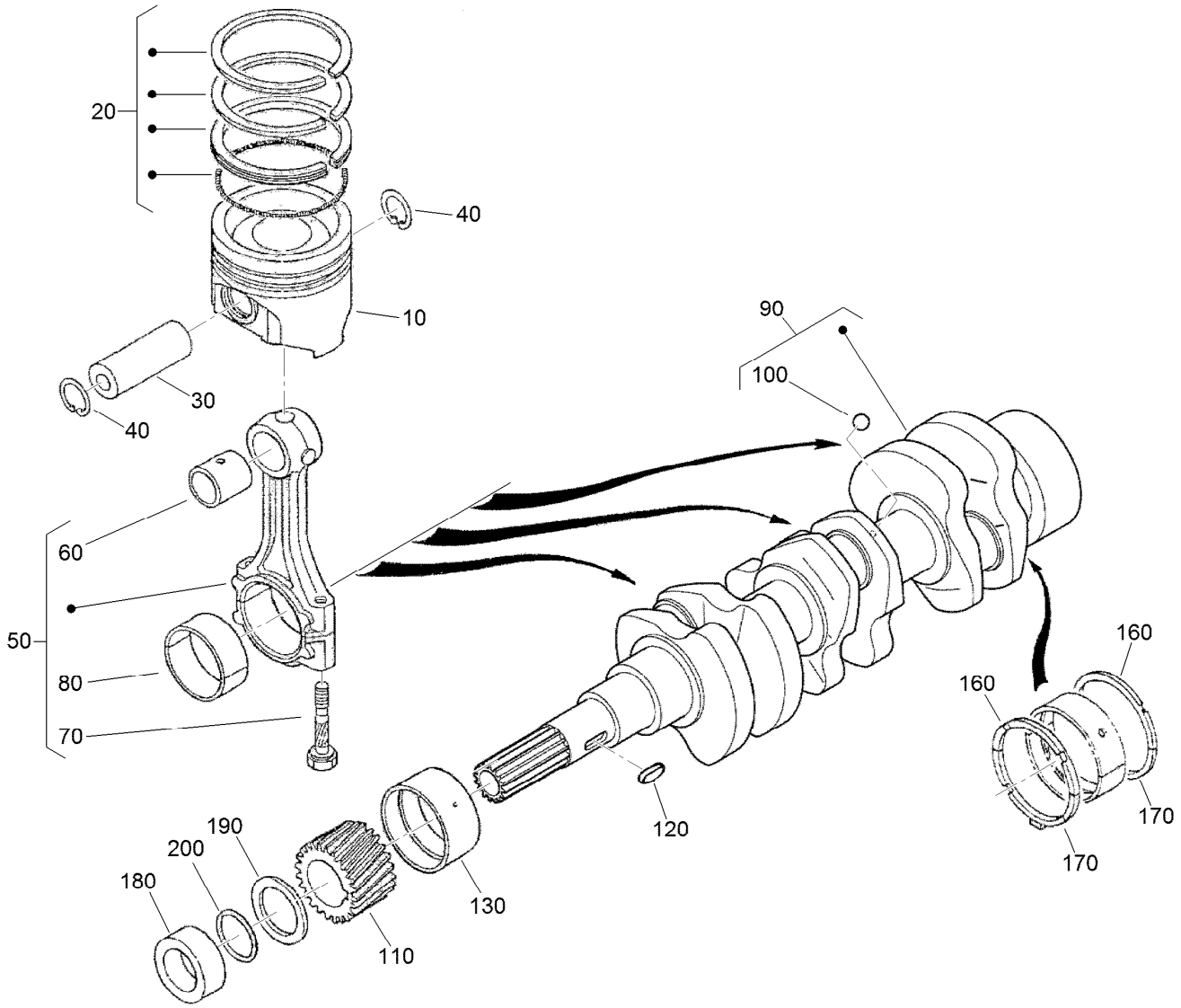

Piston and Crankshaft Assembly

Ref.	Part Number	Qty.	Description
10	125-9115	3	Piston (STD)
10	125-9116	3	Piston (+0.50Mm)
20	125-9134	3	Piston Ring ASM (STD)
20	125-9135	3	Piston Ring ASM (+0.50Mm)
30	110-3734	3	Pin-Piston
40	100-1835	6	Circlip-Internal
50	125-9070	3	Connecting Rod ASM
60	110-3736	3	Bushing-Pin, Piston
70	100-1999	6	Bolt-Rod, Connecting
80	100-2000	3	Metal-Crankpin (STD)
80	100-1942	3	Metal-Crankpin (-0.20Mm)
80	100-1943	3	Metal-Crankpin (-0.40Mm)
90	117-0308	1	Crankshaft
100	100-1791	3	Ball
110	100-1891	1	Gear-Crankshaft

Ref.	Part Number	Qty.	Description
120	100-1752	1	Key-Feather
130	110-3738	1	Metal-Crankshaft (STD)
130	110-3739	1	Metal-Crankshaft (-.0.20Mm)
130	110-3740	1	Metal-Crankshaft (-0.40Mm)
160	100-1836	2	Metal-Side (STD)
160	100-1838	2	Metal-Side (+0.20Mm)
160	100-1839	2	Metal-Side (+0.40Mm)
170	117-0309	2	Metal-Side (STD)
170	100-1840	2	Metal-Side (+0.2Mm)
170	100-1841	2	Metal-Side (+0.4Mm)
180	100-1890	1	Collar-Crankshaft
190	100-1974	1	Slinger-Oil
200	100-2209	1	O-Ring

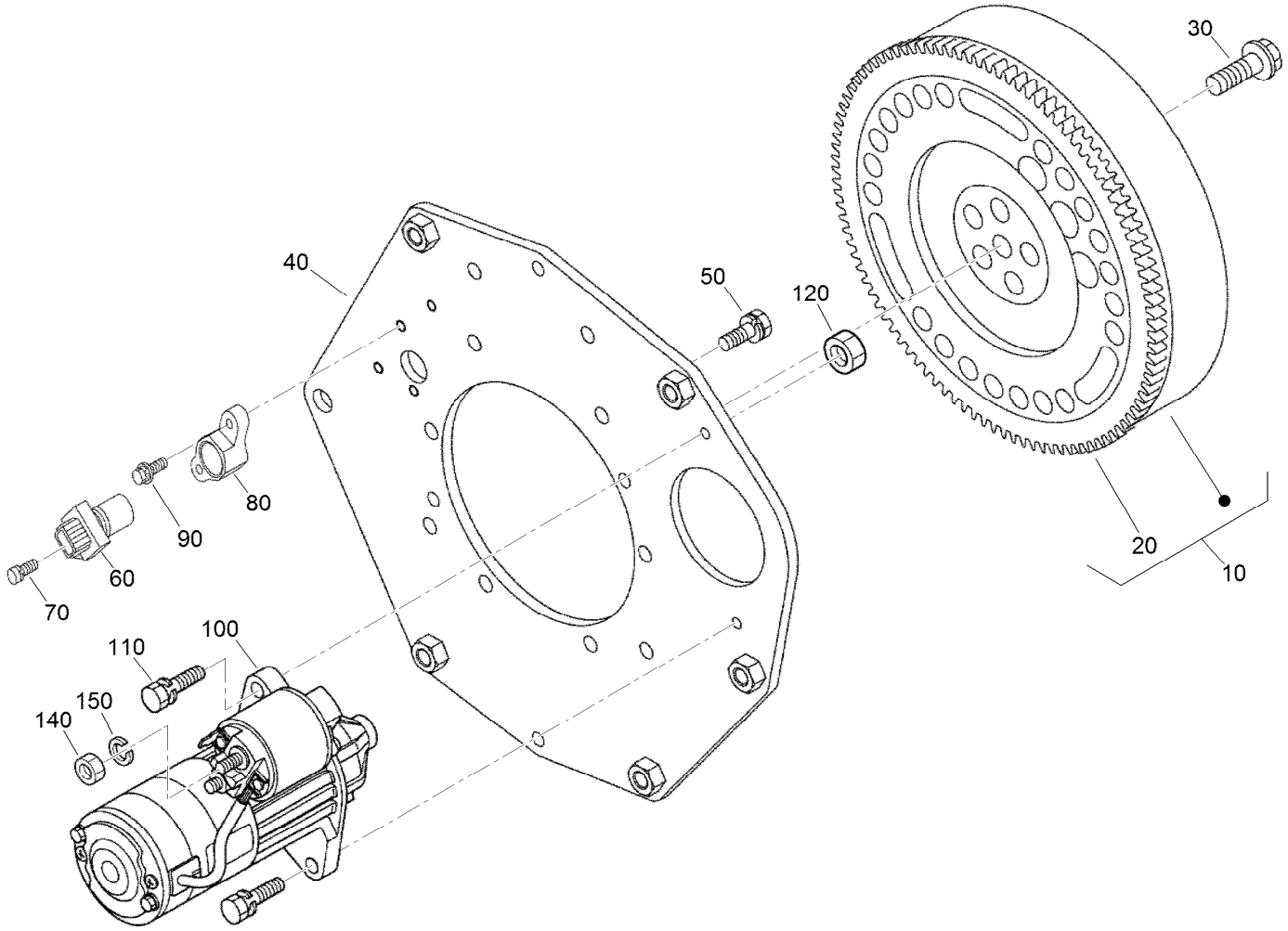

Flywheel, Starter and Sensor Switch Assembly

Ref.	*Part Number*	*Qty.*	*Description*
10	125-9153	1	Flywheel ASM
20	105-3722	1	Gear-Ring
30	125-9051	5	Bolt-Flywheel
40	125-9152	1	Plate-End, Rear
50	110-3754	10	Bolt
60	125-9103	1	Sensor Stick ASM
70	125-9094	1	Bolt-Flange
80	125-9144	1	Holder-Sensor
90	108-2873	1	Bolt-Flange
100	110-3800	1	Starter ASM
110	98-7697	2	Bolt
120	98-7534	2	Nut
140	98-7534	1	Nut
150	105-2893	1	Washer-Spring

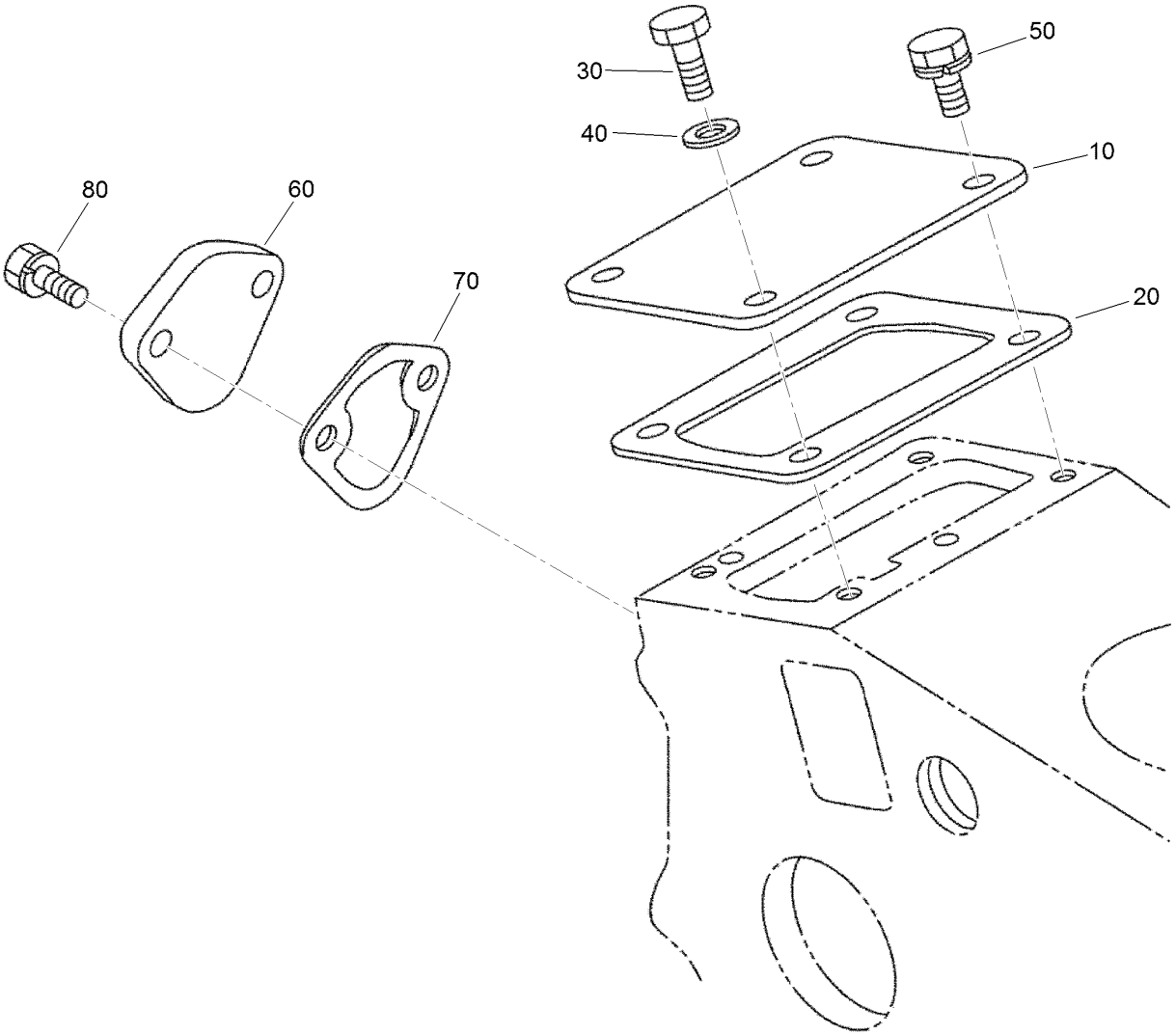

Injection and Fuel Pump Covers Assembly

Ref.	*Part Number*	*Qty.*	*Description*
10	125-9098	1	Cover
20	125-9105	1	Gasket
30	99-8348	1	Bolt
40	98-7654	1	Gasket
50	98-9350	3	Bolt
60	99-3514	1	Cover
70	98-9636	1	Gasket-Pump, Fuel
80	98-7692	2	Bolt

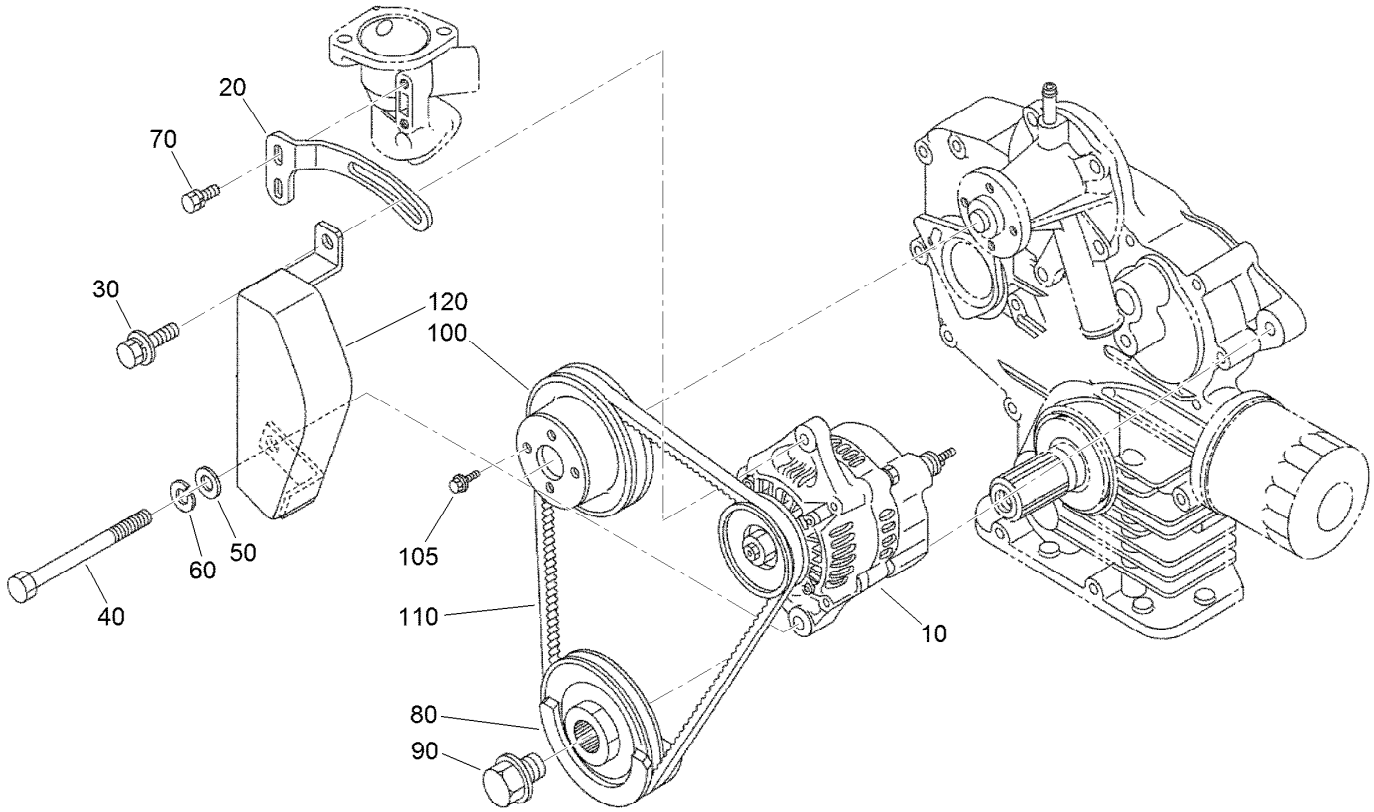

Alternator and Pulley Assembly

Ref.	Part Number	Qty.	Description
10	117-5541	1	60 Amp Alternator ASM
20	117-0314	1	Stay-Alternator
30	121-3800	1	Bolt-Sems
40	125-9091	1	Bolt-Hex
50	120-5832	1	Washer-Plain
60	105-2893	1	Washer-Spring
70	98-7692	2	Bolt
80	100-1921	1	Pulley-Fan
90	100-1978	1	Bolt
100	125-9154	1	Pulley-Drive, Fan
105	99-8363	4	Bolt-Flange
110	110-3796	1	Belt-V
120	117-0315	1	Cover-Alternator

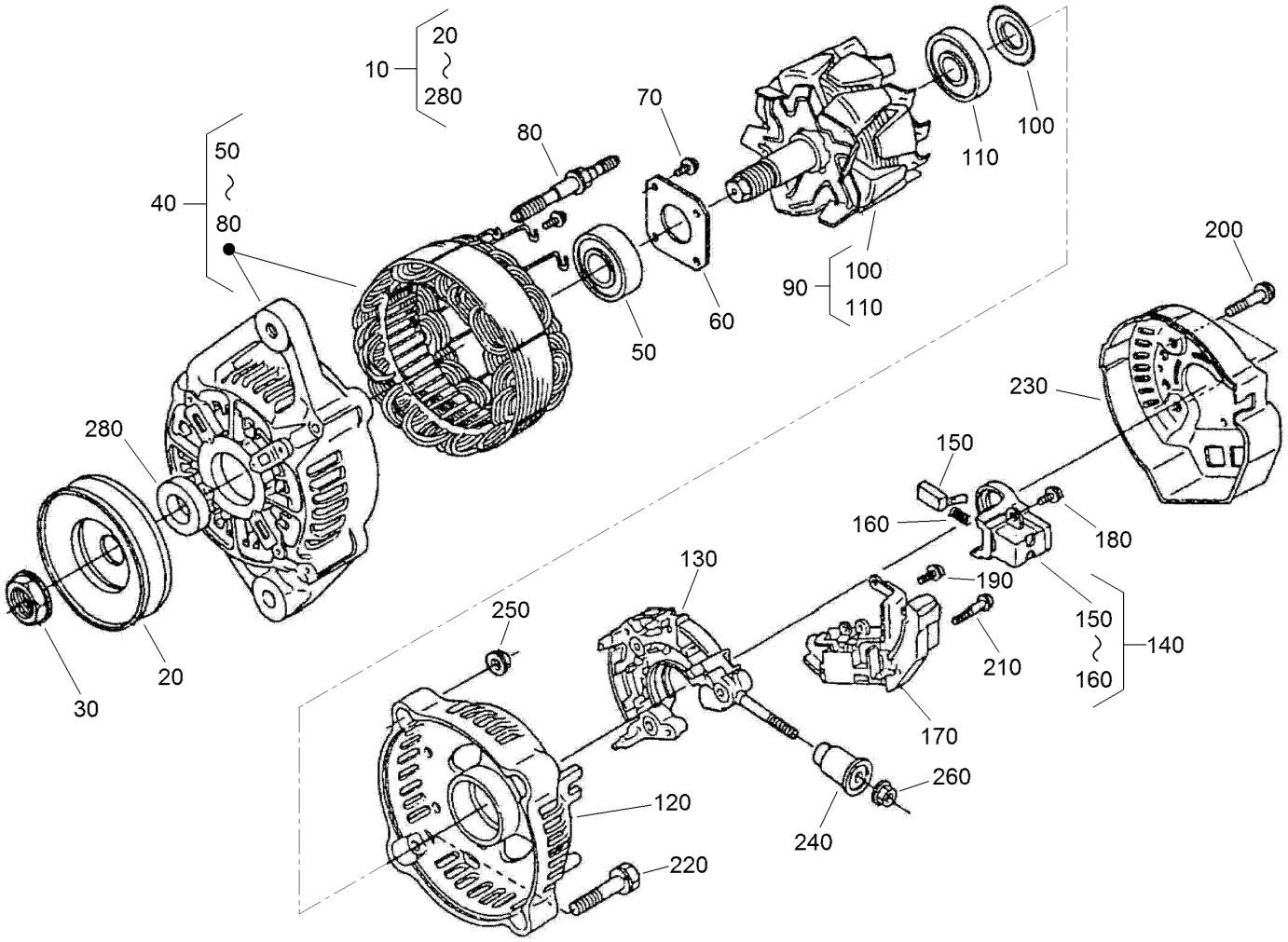

Alternator Components Assembly

Ref.	Part Number	Qty.	Description
10	117-5541	1	60 Amp Alternator ASM
20	98-9453	1	Pulley-Dynamo
30	98-7708	1	Nut
40	117-0316	1	Drive End Frame ASM
50	133-2811	1	Bearing
60	98-7715	1	Plate-Retainer
70	98-7716	4	Screw-Head, Round
80	98-7717	2	Bolt-Through
90	117-0317	1	Rotor ASM
100	98-7711	1	Cover-Bearing
110	107-0138	1	Bearing-Ball
120	133-2813	1	Frame-End
130	117-0322	1	Holder
140	107-0141	1	Brush Holder ASM

Ref.	Part Number	Qty.	Description
150	98-7724	2	Brush
160	98-7725	2	Spring-Brush
170	117-0319	1	Regulator ASM
180	98-7727	6	Screw-Head, Round
190	98-7728	1	Screw-Head, Round
200	98-7729	3	Bolt
210	98-7726	2	Screw-Head, Round
220	98-7731	2	Bolt
230	117-0320	1	Cover-End
240	117-0321	1	Insulation-Brush
250	98-7730	2	Nut
260	98-7732	1	Nut
280	98-7709	1	Collar

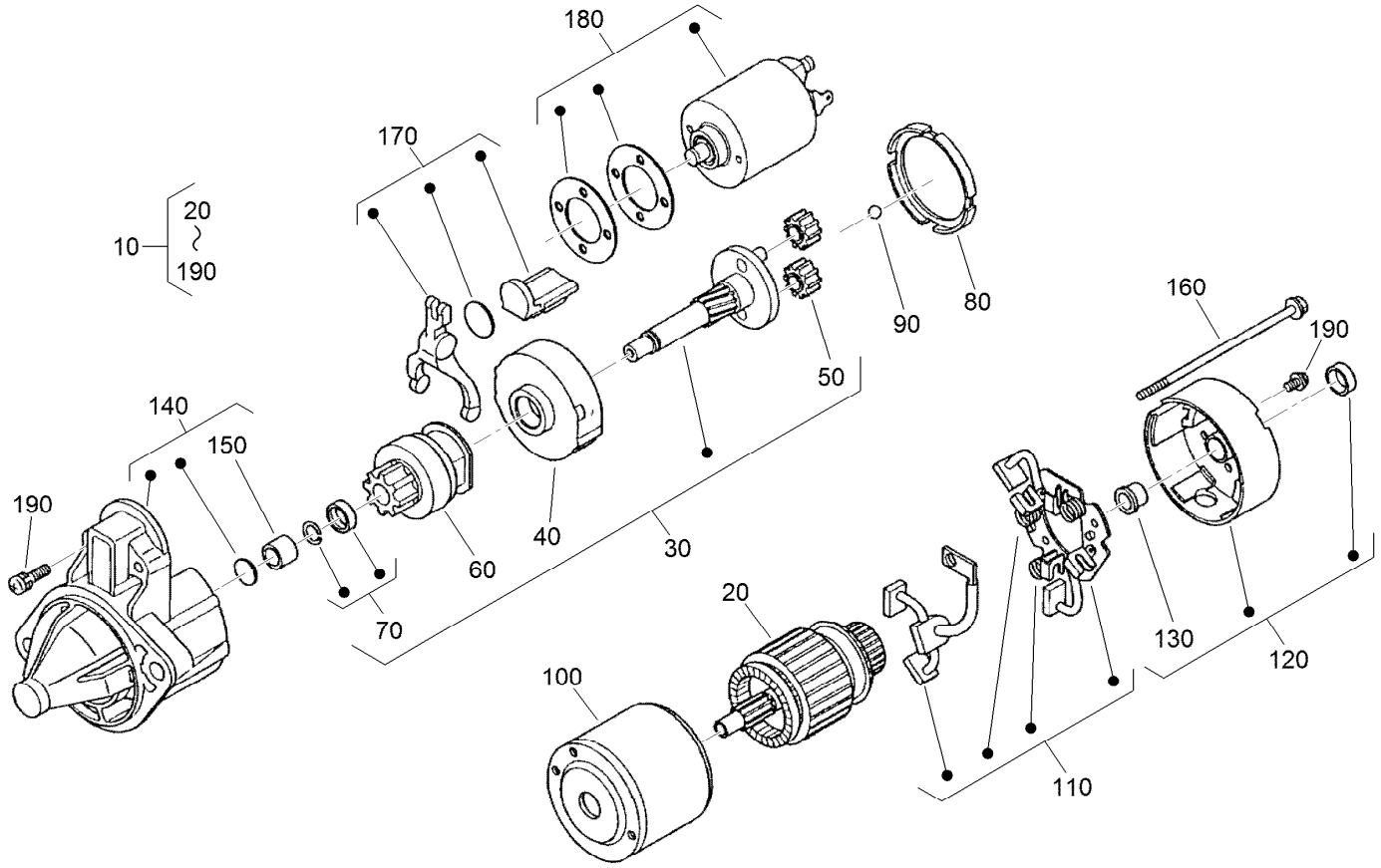

Starter Components Assembly

Ref.	Part Number	Qty.	Description
10	110-3800	1	Starter ASM
20	110-3801	1	Armature
30	110-3802	1	Shaft ASM
40	120-3142	1	Gear-Internal
50	110-3804	3	Gear-Planetary
60	110-3805	1	Clutch-Running, Over
70	110-3806	1	Stopper
80	120-3143	1	Gasket
90	110-3808	1	Ball
100	110-3809	1	Yoke

Ref.	Part Number	Qty.	Description
110	110-3810	1	Brush Holder ASM
120	110-3811	1	Rear Bracket ASM
130	110-3812	1	Bushing
140	110-3813	1	Front Bracket ASM
150	110-3814	1	Bushing
160	110-3815	2	Bolt
170	110-3816	1	Fork Lever ASM
180	125-9099	1	Switch-Magnetic
190	110-3818	1	Screws (Set Of 4)

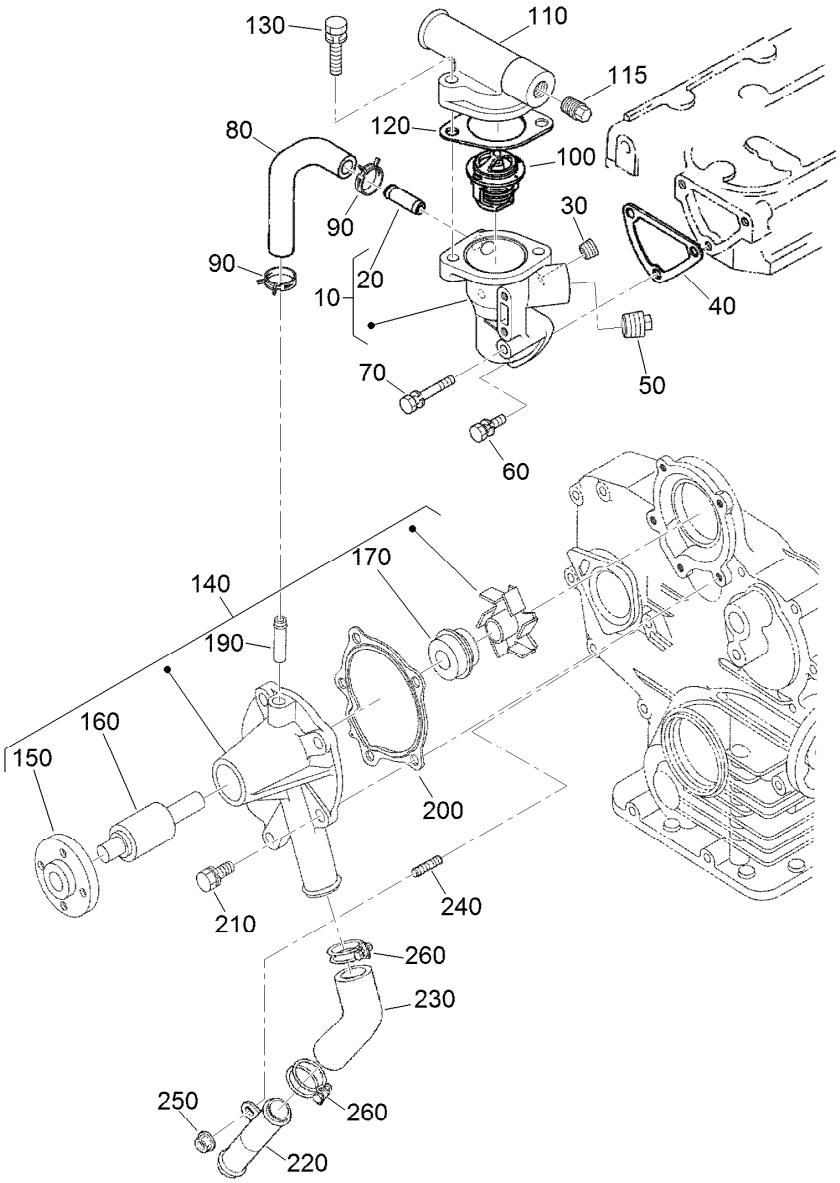

Thermostat and Water Pump Assembly

Ref.	Part Number	Qty.	Description
10	110-3819	1	Water Flange ASM
20	98-9580	1	Pipe-Return, Water
30	98-9444	1	Plug
40	110-3820	1	Gasket-Flange, Water
50	110-3821	1	Plug
60	98-7692	2	Bolt
70	105-3797	1	Bolt
80	110-3822	1	Pipe-Return, Water
90	121-3835	2	Clamp-Hose
100	98-7778	1	Thermostat ASM
110	120-7575	1	Cover-Thermostat
115	125-9079	1	Plug
120	105-3748	1	Gasket-Thermostat

Ref.	Part Number	Qty.	Description
130	98-7777	2	Bolt
140	110-3824	1	Water Pump ASM
150	100-1933	1	Flange-Pump, Water
160	100-1934	1	Bearing-Ball
170	99-3518	1	Water Pump Seal ASM
190	100-1932	1	Pipe-Return, Water
200	117-0330	1	Gasket-Pump, Water
210	100-1750	4	Bolt
220	100-1918	1	Pipe-Water
230	110-3827	1	Pipe-Water
240	100-1924	1	Stud
250	100-2203	1	Nut-Flange
260	110-3828	2	Band-Pipe

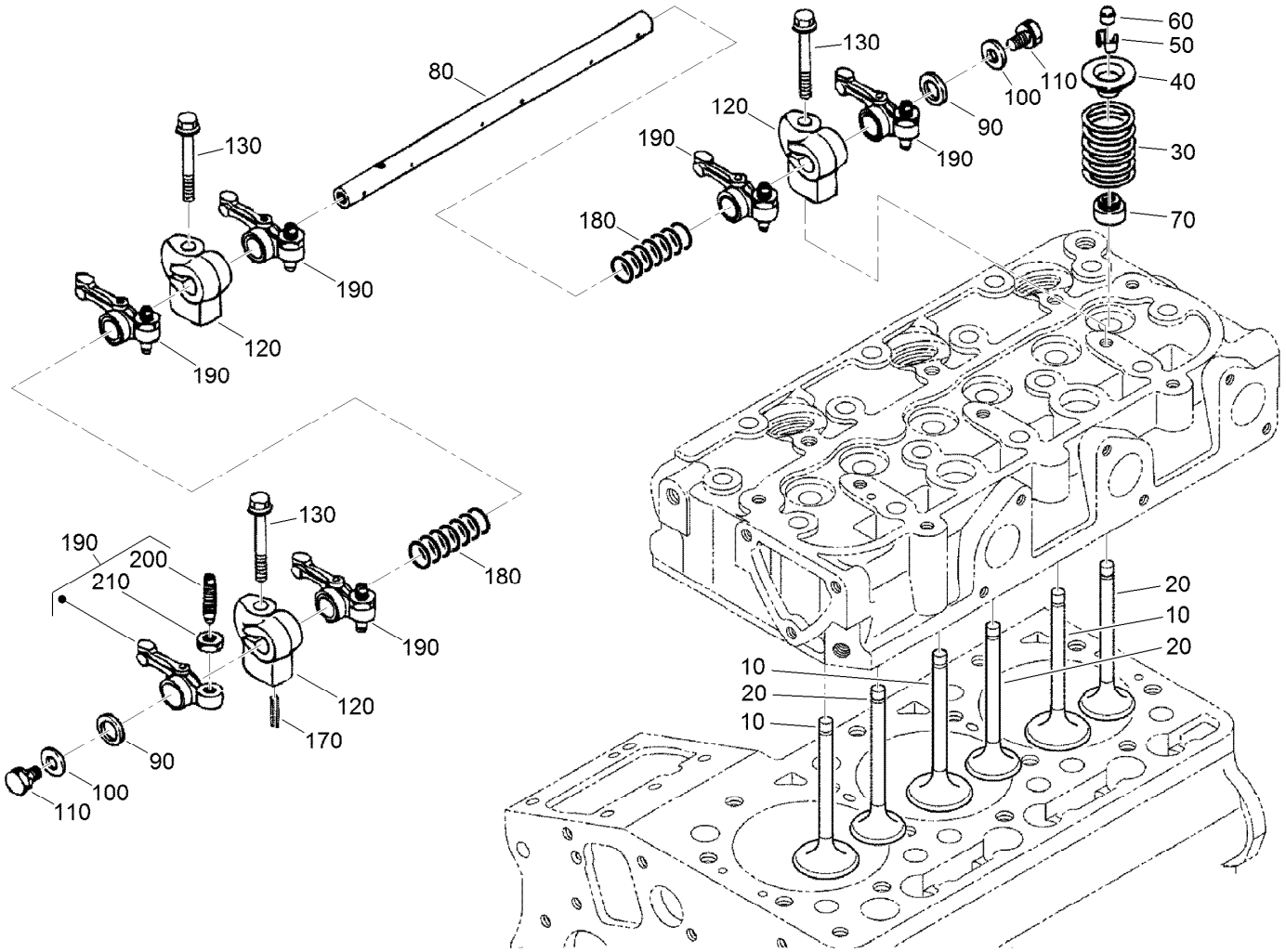

Valve and Rocker Arm Assembly

Ref.	Part Number	Qty.	Description
10	125-9106	3	Valve-Inlet
20	125-9114	3	Valve-Exhaust
30	100-1823	6	Spring-Valve
40	100-1825	6	Retainer-Spring, Valve
50	120-3136	6	Collet-Spring, Valve
60	100-2155	6	Cap-Valve
70	125-9128	6	Seal-Stem, Valve
80	110-3831	1	Shaft-Arm, Rocker
90	100-2044	2	Washer

Ref.	Part Number	Qty.	Description
100	100-1927	2	Washer-Plain
110	100-1762	2	Bolt
120	110-3833	3	Bracket-Arm, Rocker
130	110-3834	3	Bolt-Flange
170	98-7602	1	Pin-Spring
180	110-3835	2	Spring
190	100-1884	6	Rocker Arm ASM
200	100-1885	6	Screw-Adjusting
210	100-1827	6	Nut

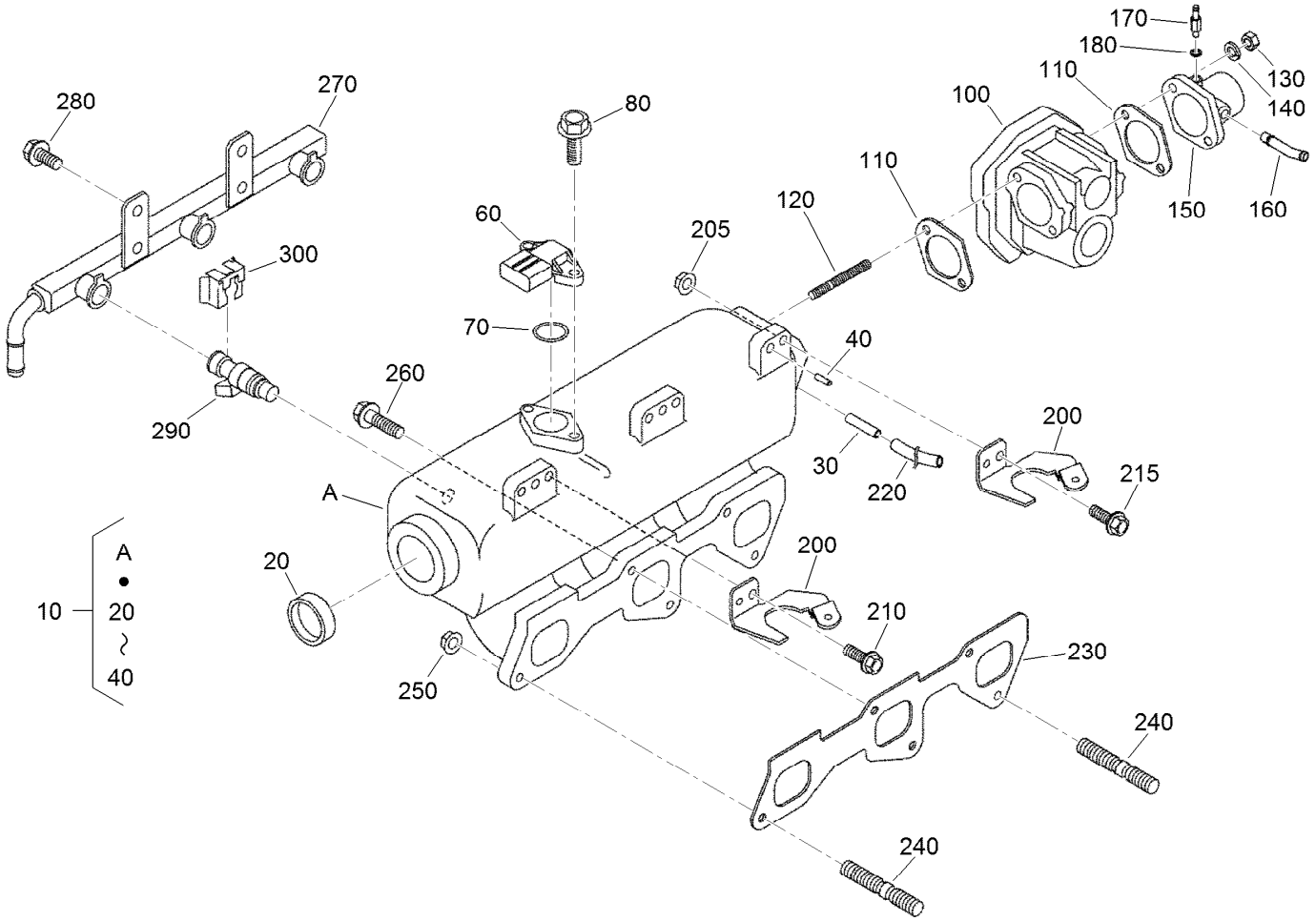

Inlet Manifold Assembly

Ref.	Part Number	Qty.	Description
10	125-9122	1	Intake Manifold ASM
20	98-7539	1	Cap-Sealing
30	125-9158	1	Pin-Pipe
40	98-9375	3	Pin-Straight
60	125-9110	1	Sensor (Tmap)
70	125-9112	1	O Ring
80	125-9111	2	Bolt-Flange
100	125-9136	1	Throttle Body ASM
110	125-9104	2	Gasket-Cleaner, Air
120	125-9093	2	Stud
130	98-7534	2	Nut
140	105-2893	2	Washer-Spring
150	125-9121	1	Flange-Cleaner, Air
160	110-3837	1	Pipe-Breather
170	98-9431	1	Screw-Bleeder, Air

Ref.	Part Number	Qty.	Description
180	98-7654	1	Gasket
200	125-9146	3	Stay-Coil, Ignition
205	100-2203	1	Nut-Flange
210	99-8363	2	Bolt-Flange
215	105-3789	1	Bolt
220	125-9097	1	Tube-Fuel
230	125-9123	1	Gasket-Manifold, Intake
240	125-9092	2	Stud
250	100-2203	2	Nut-Flange
260	98-9352	3	Bolt
270	125-9137	1	Rail-Ignition, Fuel
280	98-7692	2	Bolt
290	125-9107	3	Injector
300	125-9138	3	Stopper-Injector

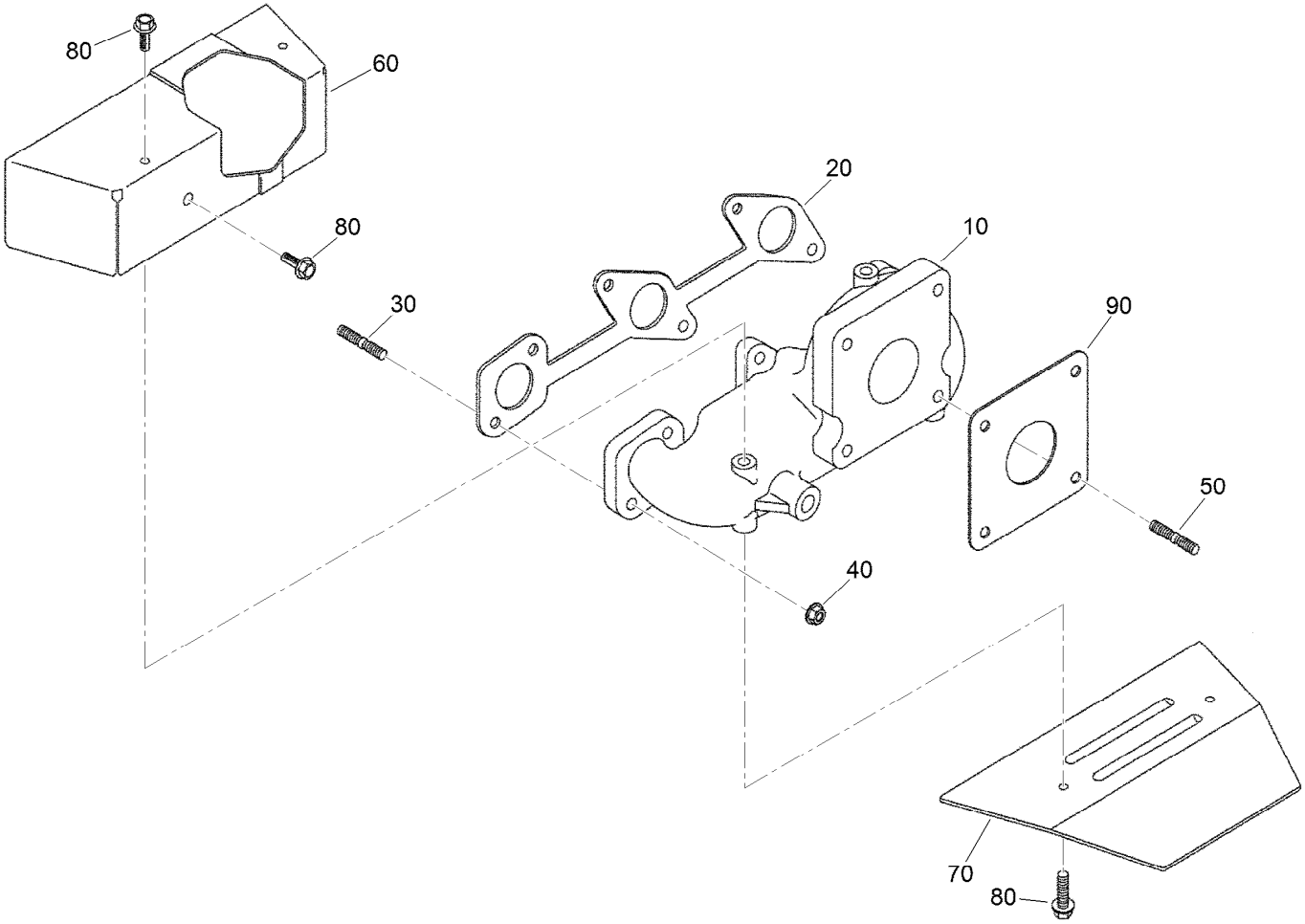

Exhaust Manifold Assembly

Ref.	*Part Number*	*Qty.*	*Description*
10	125-9125	1	Manifold-Exhaust
20	110-3840	1	Gasket-Manifold, Exhaust
30	125-9149	6	Bolt-Stud
40	100-1778	6	Nut
50	125-9100	4	Stud
60	125-9126	1	Cover-Upper
70	125-9127	1	Cover-Lower
80	125-9090	5	Bolt
90	125-9108	1	Gasket-Muffler

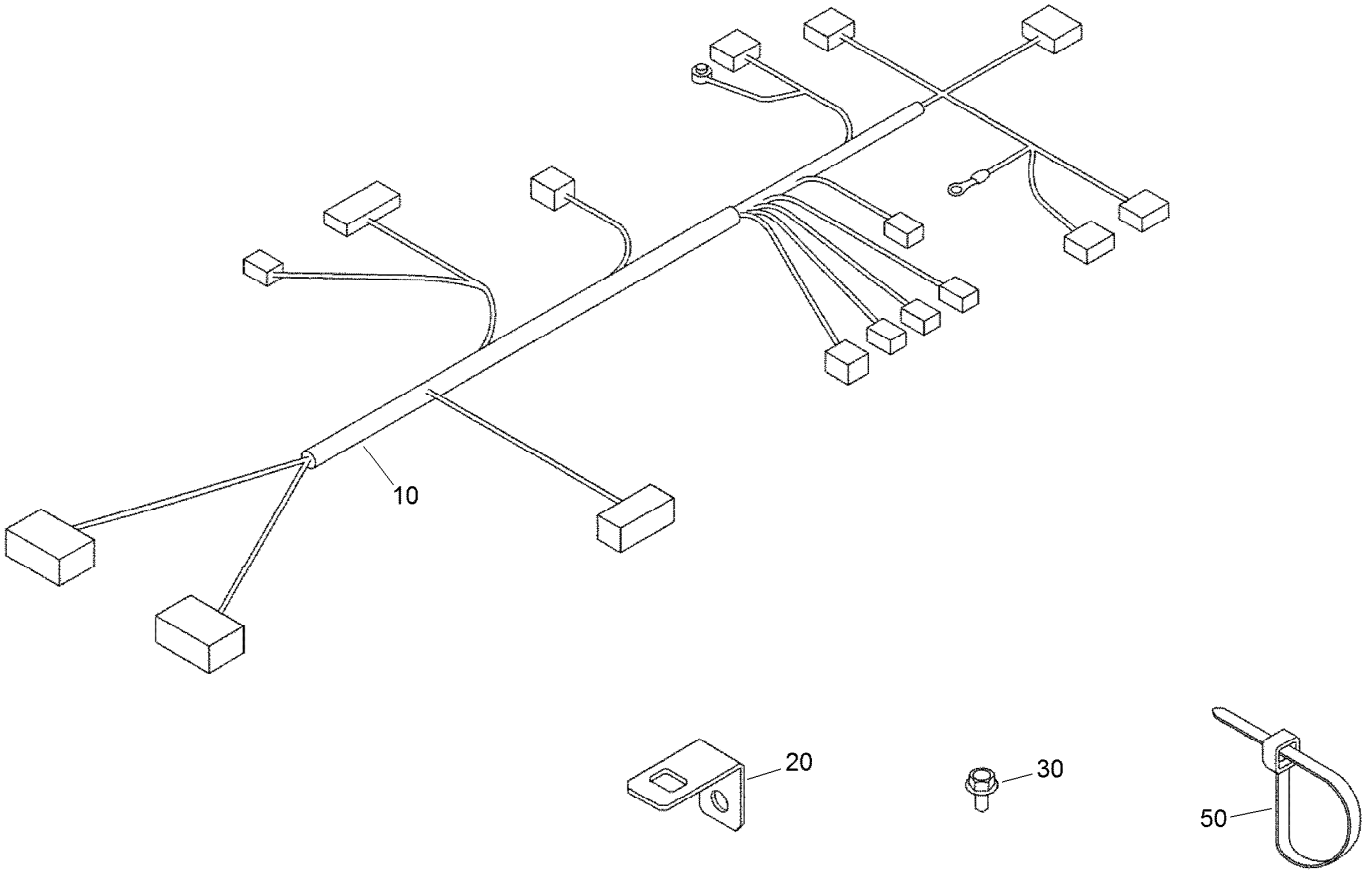

Wire Harness Assembly

Ref.	*Part Number*	*Qty.*	*Description*
10	125-9143	1	Harness-Wire, E C U
20	125-9157	1	Stay-Boom, Harness
30	115-8504	1	Bolt-Flange
50	125-9101	2	Band-Cord

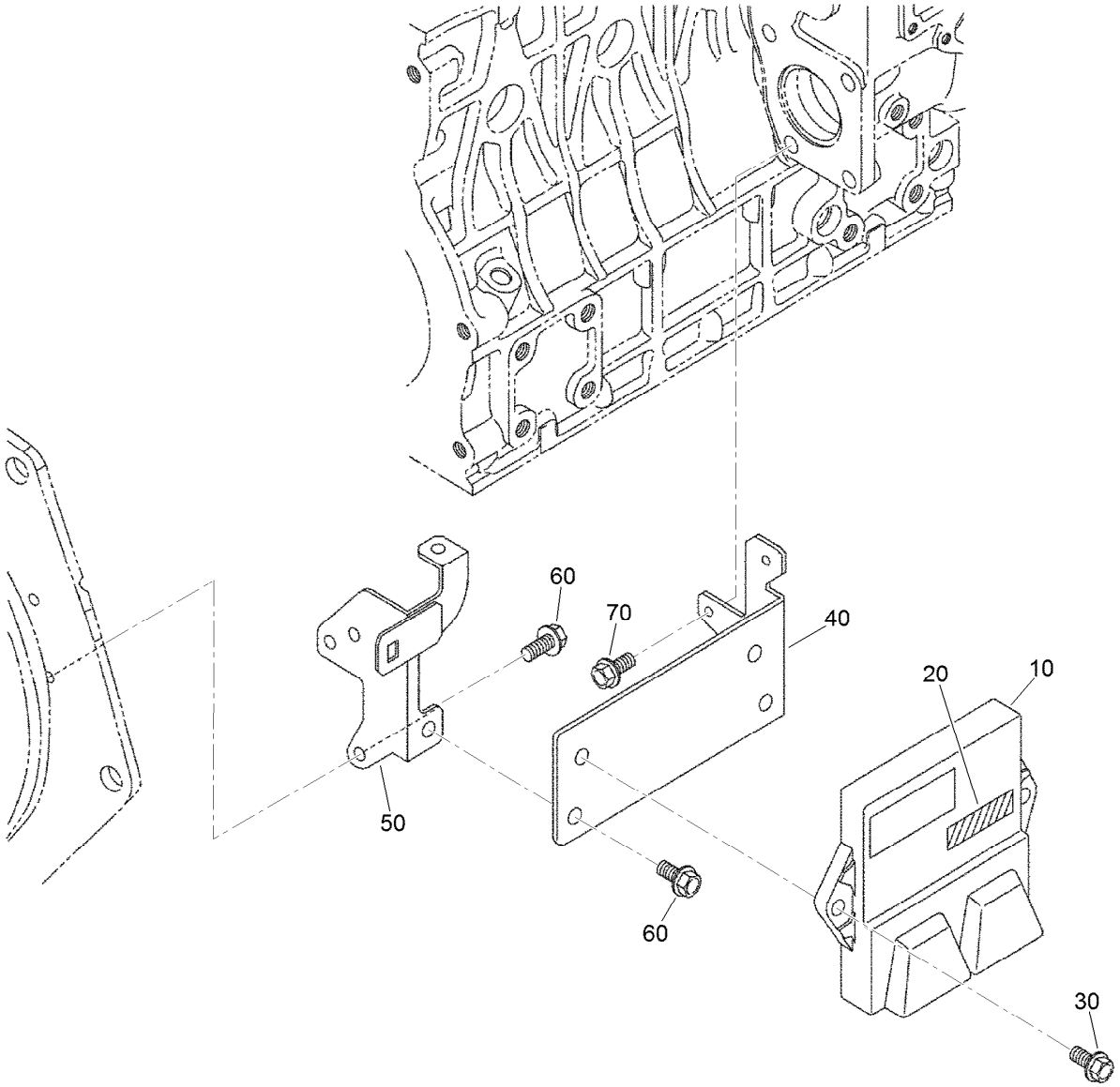

Electronic Control Unit Assembly

Ref.	*Part Number*	*Qty.*	*Description*
10	125-9156	1	E C U ASM
20	125-9147	1	Label
30	108-2873	2	Bolt-Flange
40	125-9140	1	Stay-E C U
50	125-9141	1	Stay-E C U
60	100-1774	3	Bolt-Flange
70	115-8504	2	Bolt-Flange

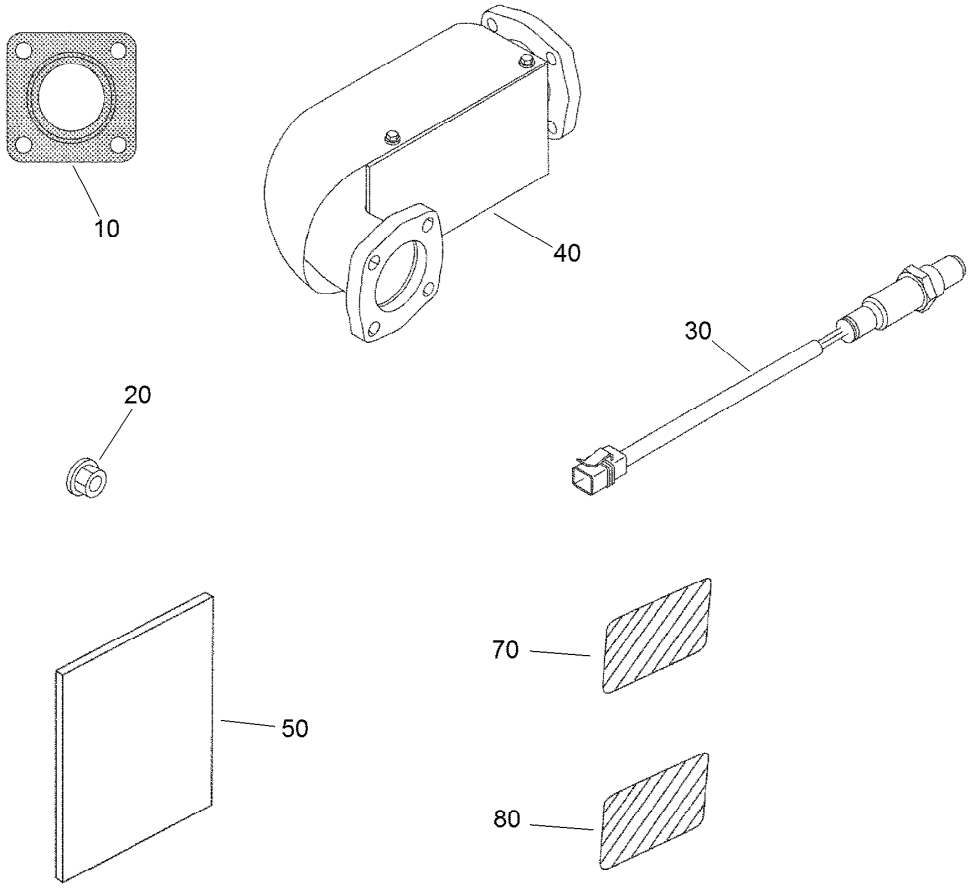

Operator Manual and Miscellaneous Engine Parts

Ref.	*Part Number*	*Qty.*	*Description*
10	125-9108	1	Gasket-Muffler
20	125-9095	4	Nut
30	121-3511	1	Sensor-O2 F/W
40	125-9118	1	Converter-Catalytic (F/W Engine)
50	125-9148	1	Operator Manual
70	110-0806	1	Decal-Caution
80	110-3843	1	Label-Instruction

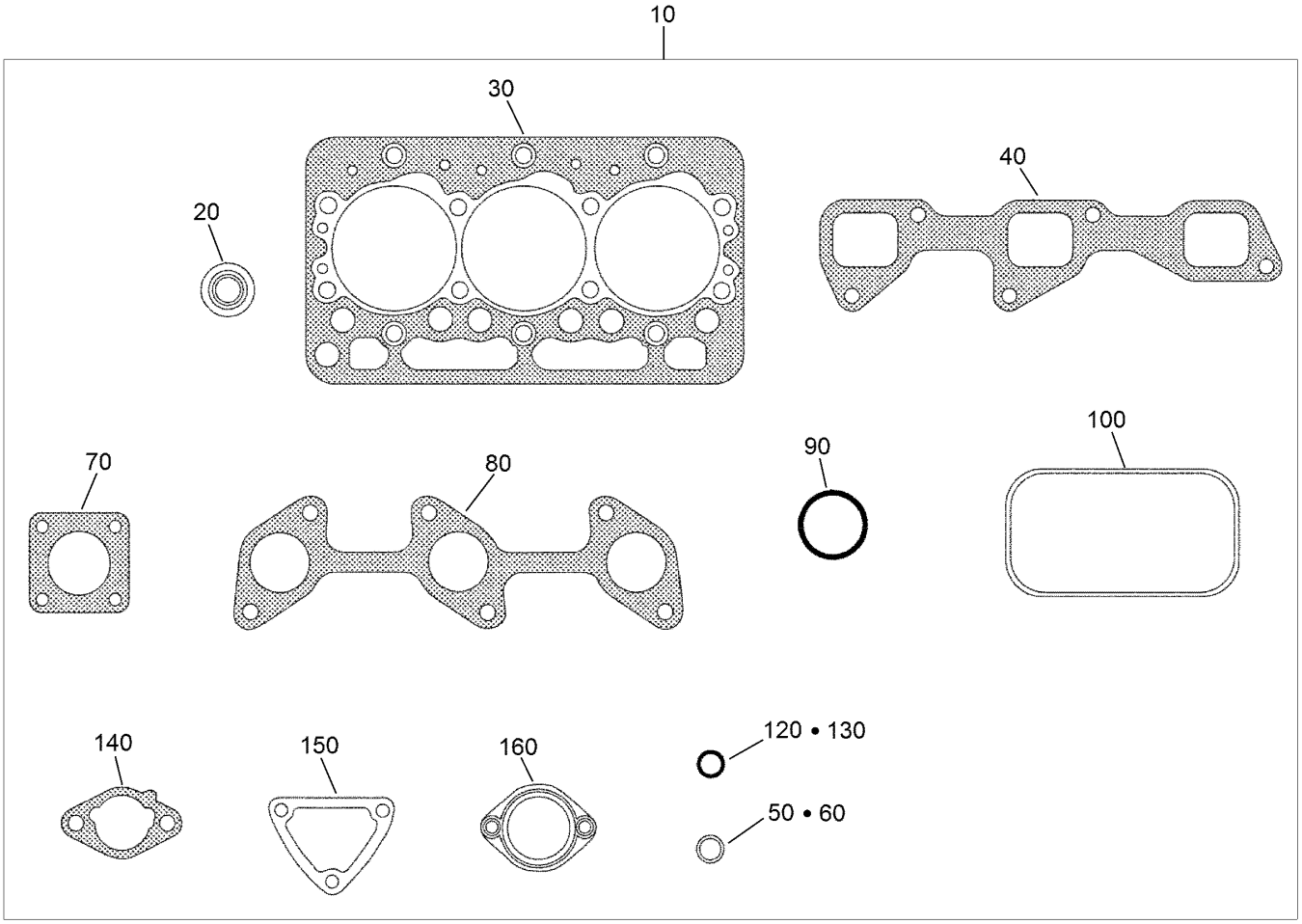

Upper Engine Gasket Kit

Ref.	*Part Number*	*Qty.*	*Description*
10	125-9150	1	Upper Gasket Kit
20	125-9128	6	Seal-Stem, Valve
30	125-9113	1	Gasket-Head
40	125-9123	1	Gasket-Manifold, Intake
50	125-9112	1	O Ring
60	99-3446	1	O-Ring
70	125-9108	1	Gasket-Muffler
80	110-3840	1	Gasket-Manifold, Exhaust
90	110-3846	1	O Ring-Breather
100	125-9130	1	Gasket-Cover, Head
120	125-9096	1	Gasket
130	98-7654	1	Gasket
140	125-9104	2	Gasket-Cleaner, Air
150	110-3820	1	Gasket-Flange, Water
160	105-3748	1	Gasket-Thermostat

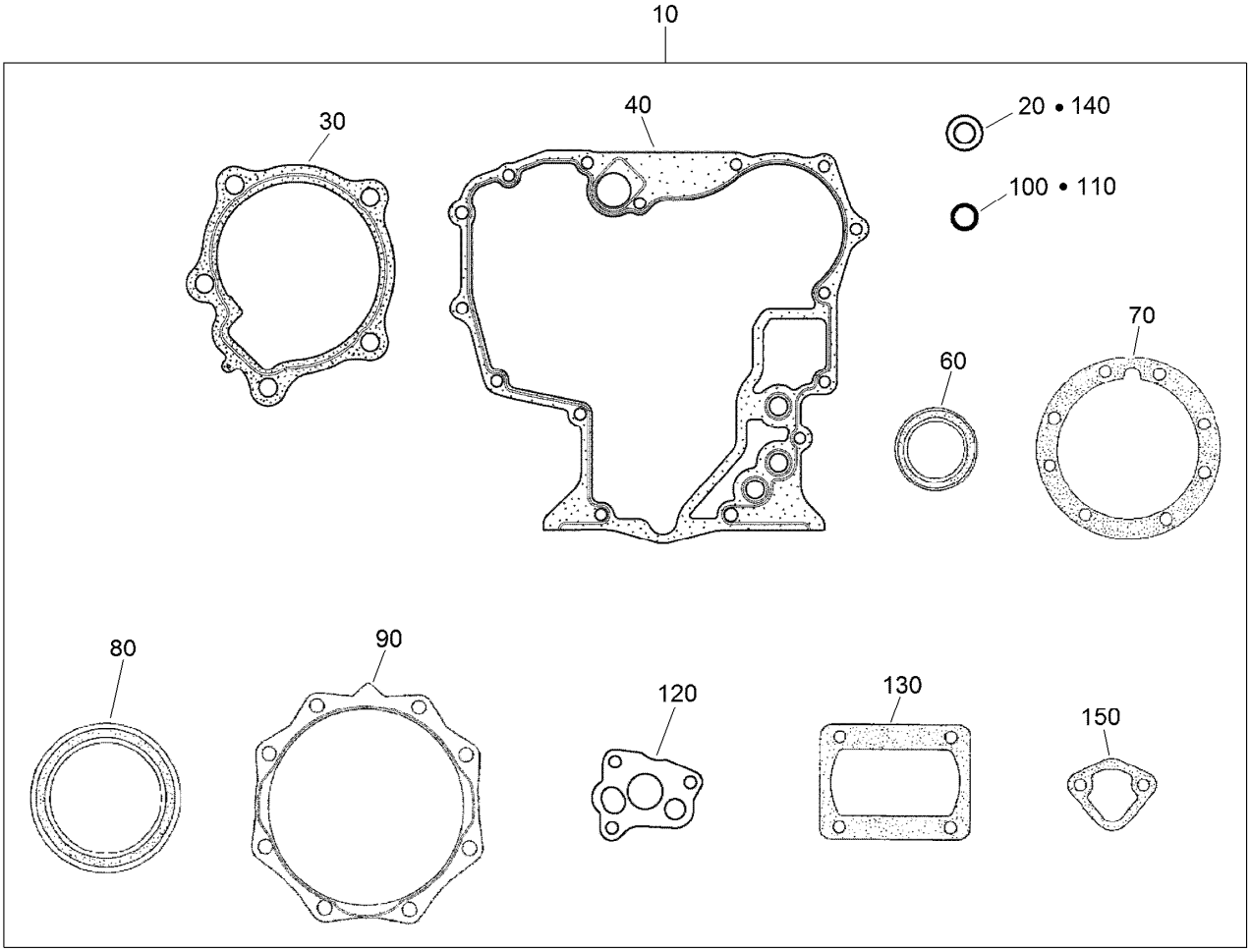

Lower Engine Gasket Kit

Ref.	Part Number	Qty.	Description
10	125-9155	1	Lower Gasket Kit
20	98-7524	1	Gasket
30	117-0330	1	Gasket-Pump, Water
40	117-0327	1	Gasket-Case, Gear
60	120-7852	1	Seal-Oil
70	100-1873	1	Gasket-Case, Bearing
80	110-3724	1	Seal-Oil
90	100-1876	1	Gasket-Cover, Case
100	100-2209	1	O-Ring
110	105-3776	1	O-Ring
120	100-2003	1	Gasket-Pump, Oil
130	125-9105	1	Gasket
140	98-7654	1	Gasket
150	98-9636	1	Gasket-Pump, Fuel

Attachments and Accessories

For 07386 Workman HDX 4-Wheel Drive Utility Vehicle with Bed

Product Name	Model/Part
Hitch Pin	100-4523
Pro Sweep Turf Sweeper	07068
Jack Stand	105-9482-03
High-Flow Hydraulic Kit	07316
Spreader Base Unit	41253
Vicon Spreader	41256
Door Mount Mirror Kit	136-1997
Backup Alarm Kit	127-8729
Bed Liner	07331
Small Seat Cover	131-6690
Topdresser 1800	44225
Topdresser 1800 Lift Kit	92-4452
Hitch ASM	131-3462
4-Wheel Drive Wire Harness Kit	132-6774
MVP Kit 400hr Workman HDX(07386)2013+	30248
External Antenna Kit, Wireless Hourmeter System	115-9524
Topdresser 2500	44507
Base Station Kit, Wireless Hourmeter System	115-9542
Core Harvester Adapter Kit	44242
Synthetic Turf Conditioner, Tow-Behind Accessory	08791
Repeater Kit, Wireless Hourmeter System	115-9543
Rear PTO Kit	07419
Multi Pro WM Turf Sprayer	41240
Front Differential Interrupter Kit	121-6337
Cab Kit	07392
Door Kit with Sliding Window	07393
Beacon Kit	130-5484
Heater Kit	07349
12 Inch Rear Wheel Weights	81115
Exterior Mirror Kit	130-5448
Worklight Kit	117-4827
Backup Alarm Kit	107-8037
High Air Intake Kit	121-6285
Side Mirror Kit	115-7849
Tailpipe Extension Kit	127-7397
Fold Down Side Kit	07303
Tire-Rear, 24x13-12	110-5132
Spark Arrestor Screen	94-8157
PTO Over Running Clutch Kit	92-2655
Fuse Block	92-2641
1/3 Area Cover Kit	127-8739
Remote Hydraulic Float Kit	117-4828
Canopy	07372
Windshield	07373
Premium ATF (Drum)	108-1185
Premium ATF (Pail)	108-1186

Attachments and Accessories (continued)

Premium All Purpose Grease (Tube) 108-1190
Horn Kit 115-7825
Remote Hydraulics Manifold Kit 110-2626
Roll-Over Protection System Signal Kit 117-4825
4 Post Roll-Over Protection System 07378
Receiver Hitch Kit 117-4831
Trailer Signal Kit 117-4836
Trailer Brake Kit 125-0123
Tire/Wheel ASM (24 X 13-12) 131-8432
Canopy for Four-Post Roll-Over Protection System Kit 119-9457
Tire-Rear, Industrial 99-1091
Wheel-12in x 8.0in 114-8260
Road Light and Homologation Kit 120-5030
Brake and Signal Light Kit 120-5045
ProPass 200 Top Dresser with Twin Spinner and Wireless Control 44751
ProPass 200 Top Dresser with Twin Spinner 44701
Pro Force Debris Blower 44553
Pro Force Debris Blower 44552
Work Light Kit 130-5485
Interior Mirror Kit 130-5449
Windshield Washer Fluid Kit, 2015 and after Workman MD/HD Series Utility Vehicle 130-5615
LED Worklight Kit 133-0554
ROPS Beacon Kit 133-0609
Aggressive Tire Kit 07422
Bracket-light, Canopy 133-0627
Pro Force Debris Blower 44554
Wheel/Tire ASM, A404 (20X9-12)Smooth 136-6334
Wheel/Tire ASM, A404 (24X12-12)Smooth 136-6335
Wheel/Tire ASM, A502 (20X9-12)Semi-Aggressive 136-6308
Wheel/Tire ASM, K502 (24X12-12)Semi-Aggressive 136-6309
Hand Throttle Kit, Serial Number 400000000 and After Workman HDX Utility Vehicle 07408
Wireless Hourmeter 115-4754
Wireless Hourmeter Kit 138-5655

Notes:

Notes:

Notes:

TORO®

Count on it.