Form No. 3310-522

TORO

MODEL NO. 31624–400001 & UP
MODEL NO. 31677–400001 & UP

PARTS CATALOG

24" SNOWTHROWERS

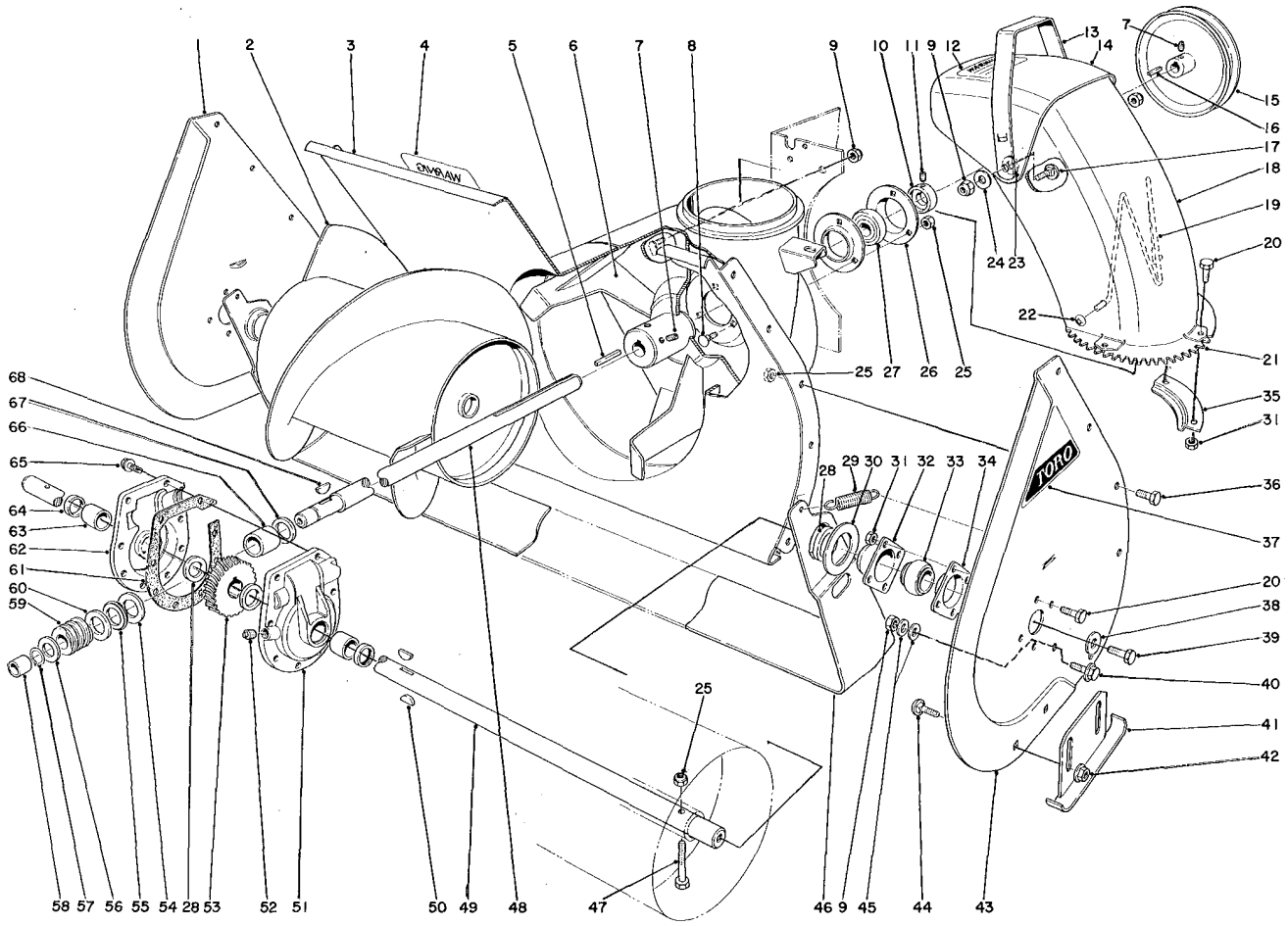

AUGER ASSEMBLY

Ref. No.	Part No.	Description	No. Used
1	20-1360	Auger Side Plate R.H.	1
2	20-1190	Auger R.H.	1
*	20-1240	Auger L.H.	1
3	20-1110	Auger Housing	1
4	10-2970	Decal, Auger Warning	1
5	6-8590	Square Key	1
6	20-1260	Impeller	1
7	3242-4	Set Screw	4
8	3230-1	Carriage Bolt	3
9	32152-2	Locknut	6
10	251-231	Locking Collar	1
11	3245-32	Set Screw	2
12	10-2980	Decal, Chute Warning	1

Ref. No.	Part No.	Description	No. Used
13	20-1410	Deflector Handle	1
14	20-1400	Chute Deflector	1
15	20-1310	Impeller Pulley	1
16	3-6857	Square Key	1
17	3231-27	Carriage Bolt	2
18	20-1390	Chute	1
19	12-2040	Chute Wire	1
20	321-3	Capscrew	12
21	20-1370	Chute Swivel Gear	1
22	3290-326	Pushnut	2
23	20-4320	Rubber Washer	2
24	3290-340	Belleville Washer	2

* Not Illustrated

Copyright 1973 By
The Toro Company
Bloomington, Minnesota 55420 U.S.A.

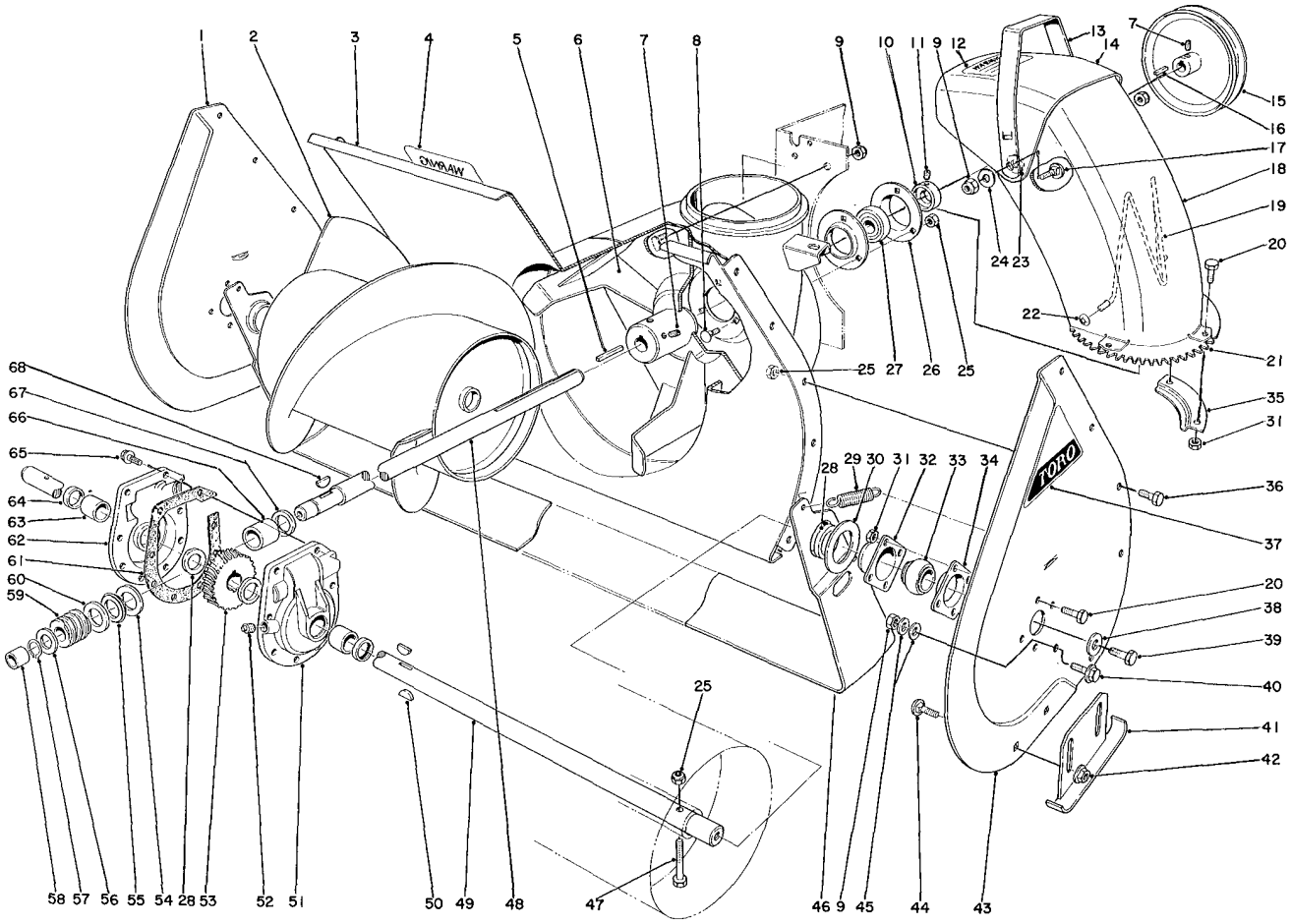

AUGER ASSEMBLY (Continued)

Ref. No.	Part No.	Description	No. Used
25	32152-1	Locknut	15
26	251-229	Bearing Flange	2
27	251-224	Impeller Bearing	1
28	252-71	Thrust Bearing	4
29	5-7290	Scraper Spring	2
30	20-0300	Scraper Blade Spacer	2
31	32152-4	Locknut	12
32	20-0990	Front Bearing Flange	2
33	20-0980	Bearing	2
34	20-1000	Rear Bearing Flange	2
35	20-1380	Chute Retainer	2
36	322-2	Capscrew	10
37	17-6500	Decal	2
38	3-0750	Flatwasher	2
39	323-6	Capscrew	2
40	3234-1	Capscrew	2
41	8-8460	Auger Skid	2
42	3290-357	Flange Nut	4
43	20-1340	Auger Side Plate L.H.	1
44	3231-27	Carriage Bolt	4

Ref. No.	Part No.	Description	No. Used
45	3256-25	Flatwasher	4
46	20-1320	Scraper Blade	1
47	17-7030	Auger Bolt	2
48	20-1180	Impeller Shaft	1
49	20-1170	Auger Shaft	1
50	3257-33	Woodruff Key	2
51	19-6970	Gear Case L.H. (Incl. Ref. 63-64)	1
52	281-1	Pipe Plug	1
53	5-7180	Worm Gear	1
54	252-78	Thrust Washer	1
55	252-76	Thrust Bearing	1
56	3-8664	Thrust Washer	1
57	32120-72	Retaining Ring	1
58	256-32	Bushing	1
59	5-7170	Worm	1
60	252-77	Thrust Washer	1
61	19-8520	Gasket	1
62	19-6980	Gear Case R.H. (Incl. Ref. 63-64)	1

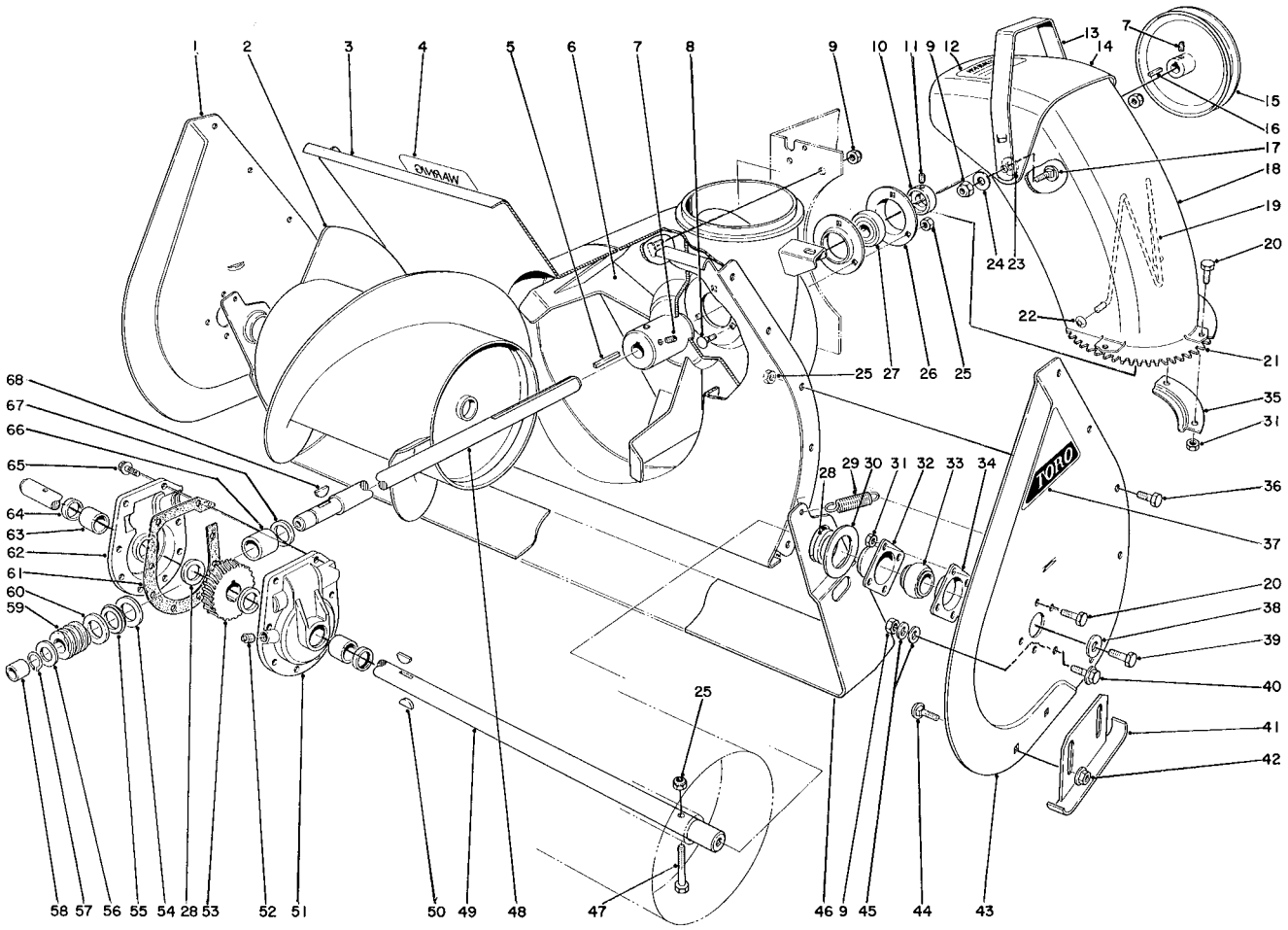

AUGER ASSEMBLY (Continued)

Ref. No.	Part No.	Description	No. Used
63	256-237	Bushing	2
64	7-0045	Oil Seal	2
65	32144-11	Self-Tapping Screw	8
66	20-3210	Bushing	1
67	237-87	Seal	1

Ref. No.	Part No.	Description	No. Used
68	3257-23	Woodruff Key	1
*	19-7000	Gear Case Complete	1
*	20-2850	Heavy Duty Skid Kit (Optional)	1
*	20-0690	Drift Breaker Kit (Optional)	1

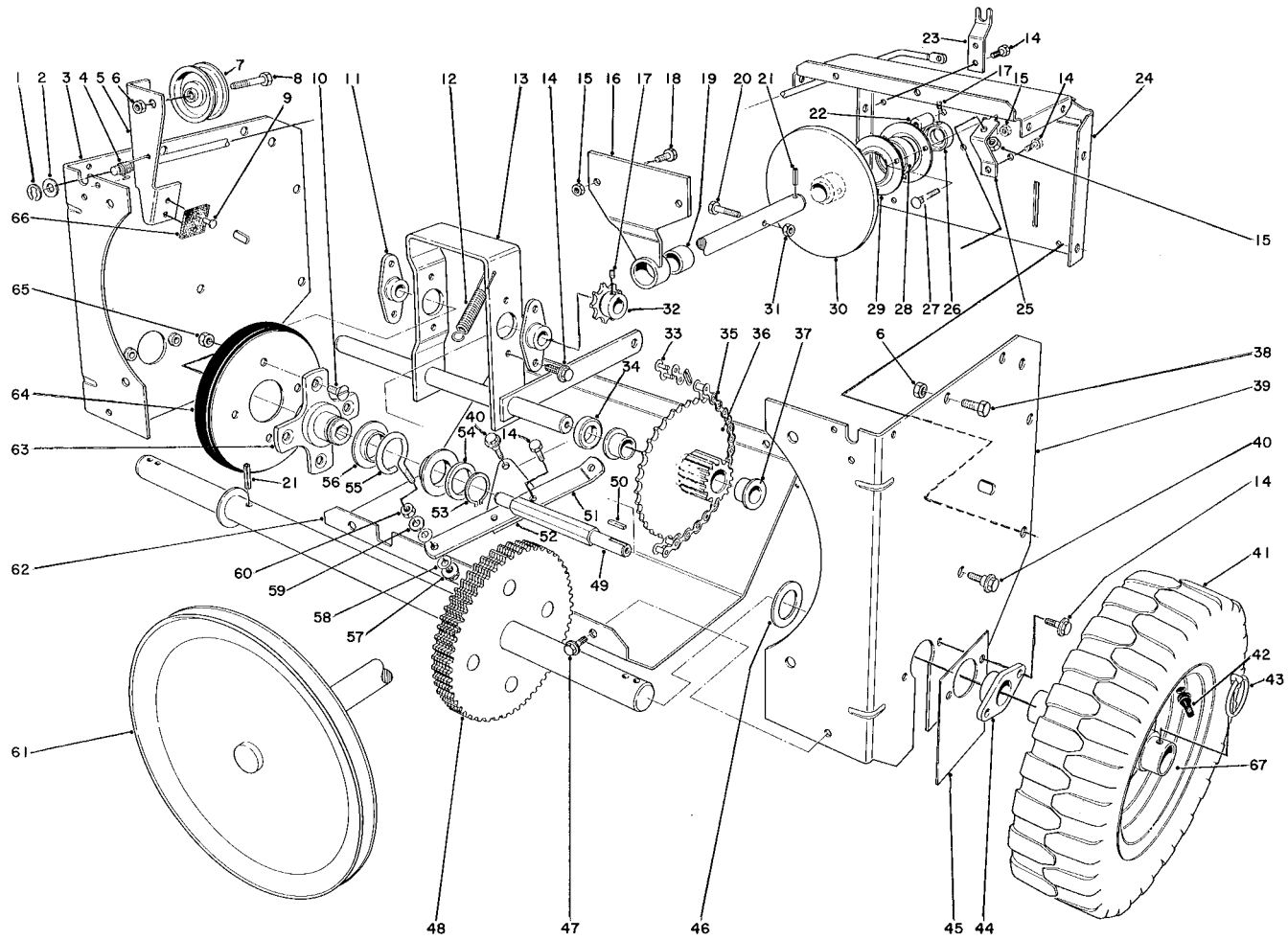

TRACTION ASSEMBLY

Ref. No.	Part No.	Description	No. Used
1	32151-43	Klip-Ring	1
2	3256-25	Flatwasher	1
3	20-1420	Traction Side Plate R. H.	1
4	20-1160	Clutch Torsion Spring	1
5	20-7870	Clutch Rod & Pad Assembly	1
6	32146-2	Locknut	9
7	3-4244	Idler Pulley	1
8	323-29	Capscrew	1
9	3290-284	Pop Rivet	2
10	32108-94	Screw	4
11	20-1620	Bearing	2
12	11-4640	Clutch Control Spring	1
13	20-1580	Pivot Shaft	1
14	32144-11	Self-Tapping Screw	13
15	32152-1	Locknut	6
16	20-1520	Shaft Support	1
17	3245-32	Set Screw	4
18	322-2	Capscrew	2
19	252-75	Needle Bearing	1
20	321-11	Capscrew	1
21	32121-6	Roll Pin	2
22	20-1090	Spacer	3
23	20-1080	Clutch Rod Support	1

Ref. No.	Part No.	Description	No. Used
24	20-1440	Center Frame	1
25	20-1760	Pivot Bracket	1
26	251-231	Locking Collar	1
27	3230-5	Carriage Bolt	3
28	251-224	Bearing	1
29	251-229	Bearing Flange	2
30	20-1550	Friction Plate	1
31	32152-4	Locknut	1
32	5-9820	Sprocket 8T	1
33	2710-6	Connecting Link	1
34	3-7384	Spacer	1
35	20-1810	Chain	1
36	20-1640	Sprocket and Gear (Incl. Ref 37)	1
37	3-1506	Flanged Bushing	2
38	323-3	Capscrew	8
39	20-1430	Traction Side Plate L. H.	1
40	11-8140	Shoulder Screw	3
41	231-80	Tire	2
42	232-27	Valve Stem	2
43	3290-243	Klik-Pin	2
44	20-1730	Axle Bearing	2
45	20-1720	Cover	1

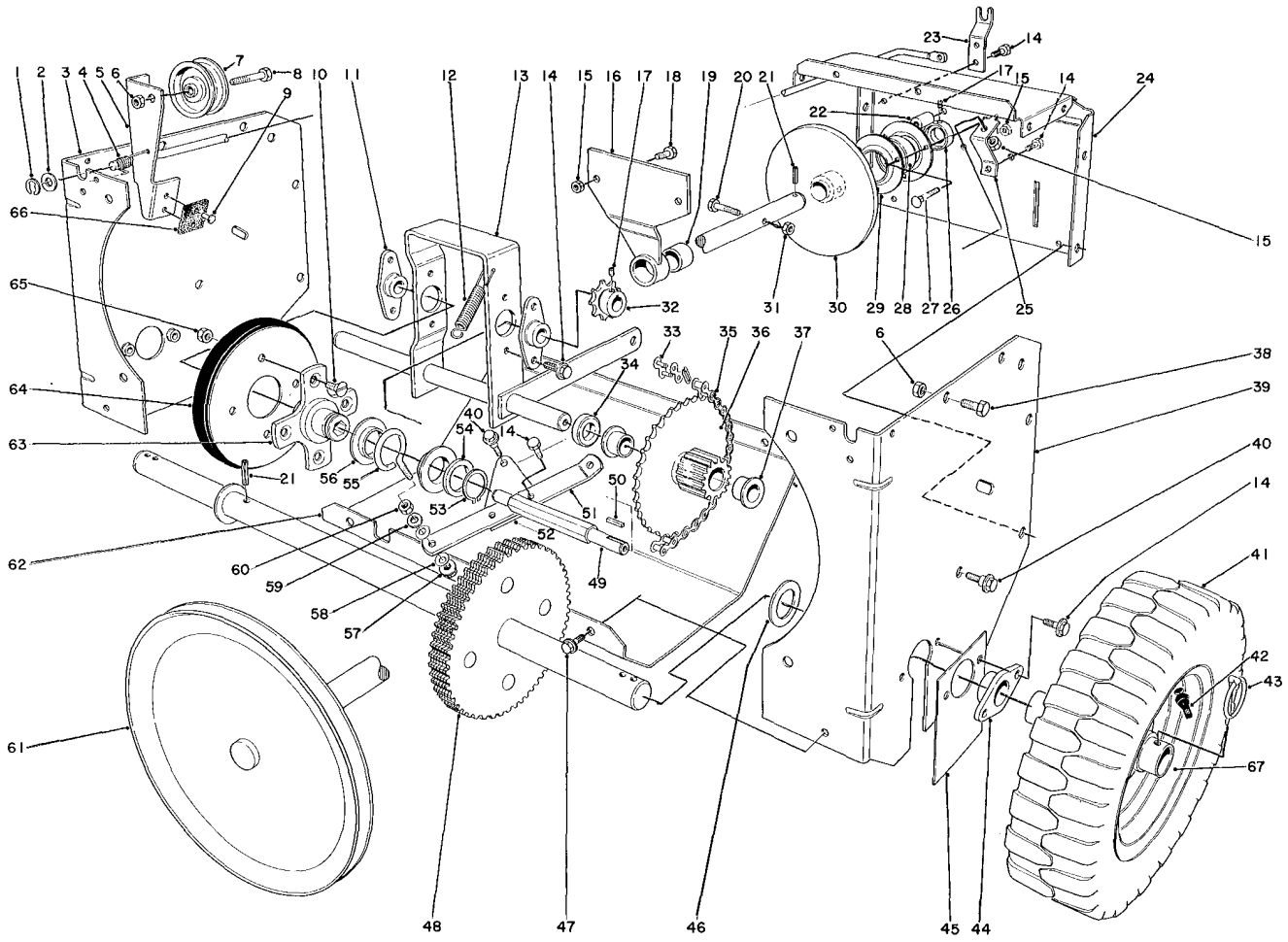

TRACTION ASSEMBLY (Continued)

Ref. No.	Part No.	Description	No. Used
46	3-0737	Thrust Washer	2
47	32144-10	Self-Tapping Screw	4
48	20-1680	Axle and Gear Assembly	1
49	20-1630	Friction Wheel Shaft	1
50	3-6168	Square Key	1
51	20-1780	Shift Linkage	1
52	20-1770	Pivot Plate	1
53	32151-36	Snap Ring	1
54	252-71	Thrust Bearing	1
55	11-8050	Slider Ring Collar	1
56	11-8080	Slider Ring	2
57	32128-12	Flange Nut	1
58	3290-212	Spring Washer	2

Ref. No.	Part No.	Description	No. Used
59	3256-45	Flatwasher	1
60	32146-12	Locknut	1
61	20-1480	Drive Shaft	1
62	20-1840	Lower Shield	1
63	20-3310	Traction Disc Hub	1
64	3-5461	Disc Assembly	1
65	32146-5	Locknut	4
66	20-3100	Brake Pad	1
67	20-1750	Wheel	2
*	20-2050	Loose Parts Kit	1
*	12-8100	Snow Cab Assembly (Optional)	1
*	20-9800	Tire Chains (Optional)	1

*Not Illustrated

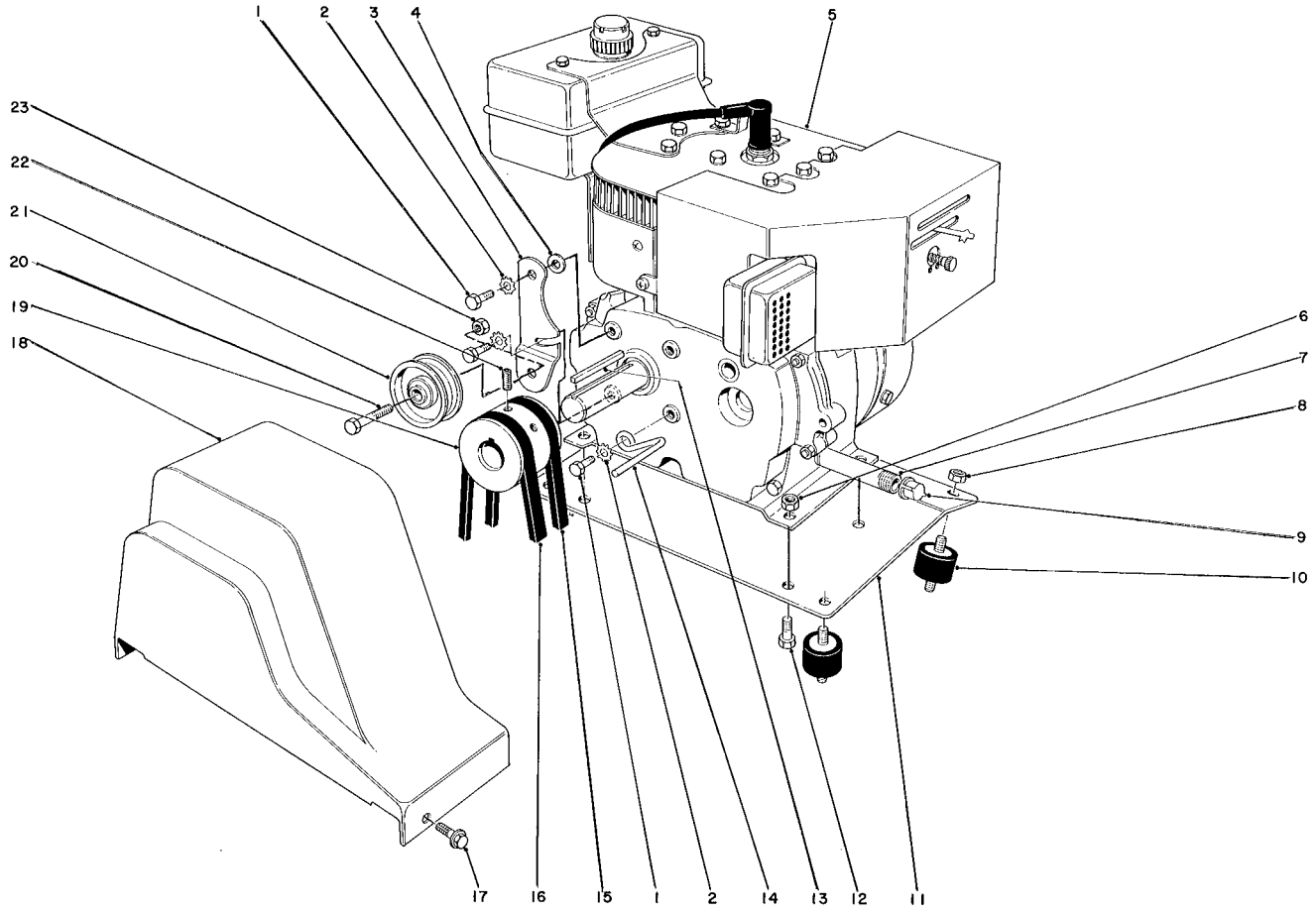

ENGINE ASSEMBLY

Ref. No.	Part No.	Description	No. Used
1	3210-2	Capscrew	3
2	3255-8	Lockwasher, Ext. Tooth	3
3	20-1800	Engine Idler Arm	1
4	3256-23	Flatwasher	2
5	221-434	Engine (Model 31624 only)	1
*	221-458	Engine (Model 31677 only)	1
6	32152-1	Locknut	4
7	289-34	Pipe Nipple	1
8	32149-1	Locknut	8
9	288-2	Pipe Cap	1
10	20-3130	Engine Mount	4
11	20-1790	Engine Mounting Plate	1
12	322-2	Capscrew	4

Ref. No.	Part No.	Description	No. Used
13	5-0930	Square Key	1
14	17-5530	Belt Retainer	1
15	20-1820	V-Belt – Traction	1
16	17-0850	V-Belt – Auger	1
17	32144-10	Self-Tapping Screw	2
18	20-1830	Belt Guard	1
19	21-4100	Pulley	1
20	323-29	Capscrew	1
21	3-4244	Idler Pulley	1
22	3246-14	Set Screw	2
23	32146-2	Locknut	1
*	20-7100	Starter Kit Domestic (Optional)	1
*	11-5700	Starter Kit Canadian (Optional)	1

* Not Illustrated

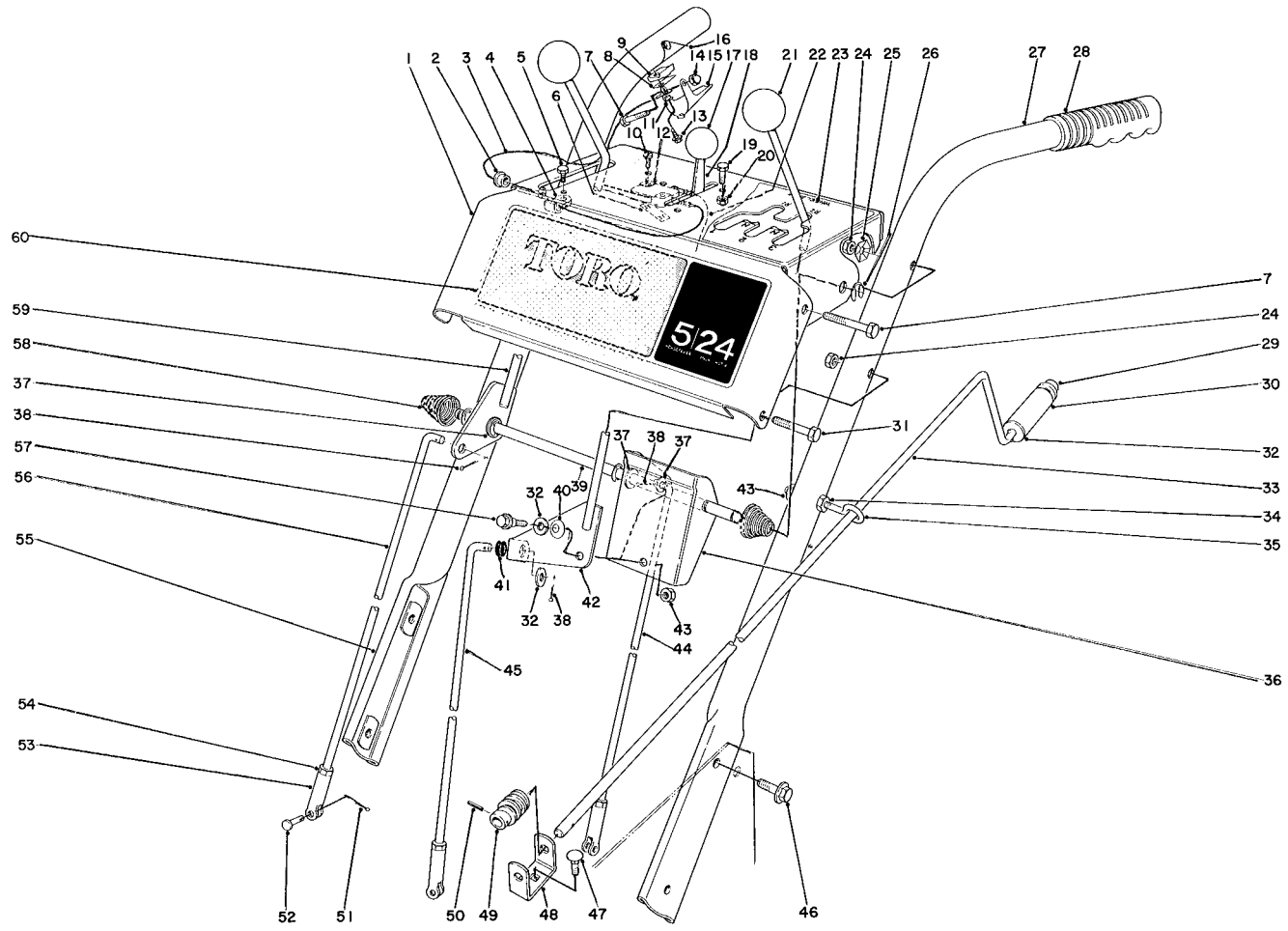

HANDLE ASSEMBLY

Ref. No.	Part No.	Description	No. Used
1	20-1900	Escutcheon Plate	1
2	2410-33	Snap Bushing	1
3	20-1950	Wire Ass'y.	1
4	20-2810	Plastic Clip	1
5	32104-76	Self-Tapping Screw	1
6	3290-354	Clip	1
7	321-11	Capscrew	3
8	17-5690	Safety Interlock Contact	1
9	17-5680	Safety Interlock Insulator	1
10	3290-93	Machine Screw	2
11	17-5700	Insulator Washer	1
12	12-3320	Micro Switch	1
13	32104-75	Self-Tapping Screw	1
14	32111-7	Acorn Nut	1
15	17-5710	Safety Lever	1
16	17-5720	Spring	1
17	233-36	Throttle Control Knob	1
18	17-5520	Throttle Control	1
19	3290-359	Hex Hd. Screw	2
20	32146-18	Locknut	2
21	233-21	Knob	2
22	20-0960	Wire Ass'y.	1
23	20-2000	Instruction Decal	1

Ref. No.	Part No.	Description	No. Used
24	32152-4	Locknut	4
25	3290-257	Pyramidal Washer	2
26	32151-43	Klip Ring	4
27	20-1860	Handle (Left Hand)	1
28	6-0450	Handle Grip	2
29	3290-320	Speed Nut	1
30	20-2060	Chute Control Grip	1
31	321-9	Capscrew	2
32	3256-24	Flat Washer	3
33	17-5750	Chute Control Rod	1
34	32146-5	Locknut	1
35	20-8670	Eye Bolt	1
36	20-2010	Shift Bracket	1
37	3256-25	Flatwasher	2
38	3272-6	Cotter Pin	3
39	20-1910	Pivot Rod	1
40	3290-213	Spring Washer	1
41	237-89	Rubber Grommet	1
42	20-2020	Shift Lever	1
43	32152-1	Locknut	2
44	20-1970	Traction Control Rod	1
45	20-1980	Speed Control Rod	1
46	3234-1	Bolt	4

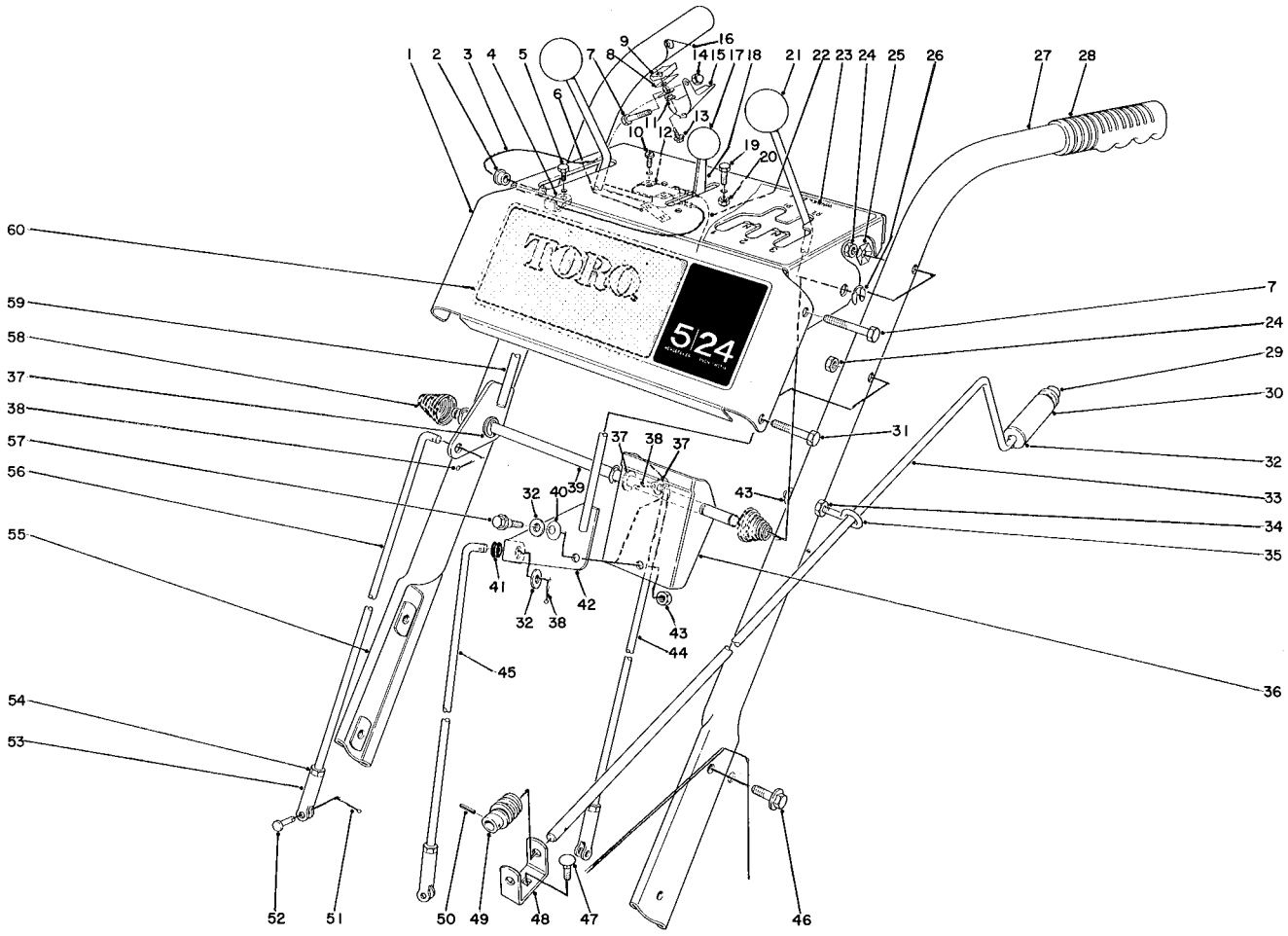

HANDLE ASSEMBLY (Continued)

Ref. No.	Part No.	Description	No. Used
47	3230-1	Carriage Bolt	1
48	11-7110	Worm Bracket	1
49	8-8600	Worm	1
50	32121-50	Roll Pin	1
51	3272-5	Cotter Pin	3
52	283-1	Clevis Pin	3
53	5-0865	Clevis	3
54	3220-3	Jam Nut	3
55	20-1880	Handle (Right Hand)	1

Ref. No.	Part No.	Description	No. Used
56	20-1960	Auger Control Rod	1
57	11-8140	Shoulder Screw	1
58	17-5630	Conical Spring	2
59	20-1920	Lever	1
60	20-1990	Decal, Escutcheon (Used on Model 31624 only)	1
*	20-4540	Decal, Escutcheon (Used on Model 31677 only)	1

* Not Illustrated

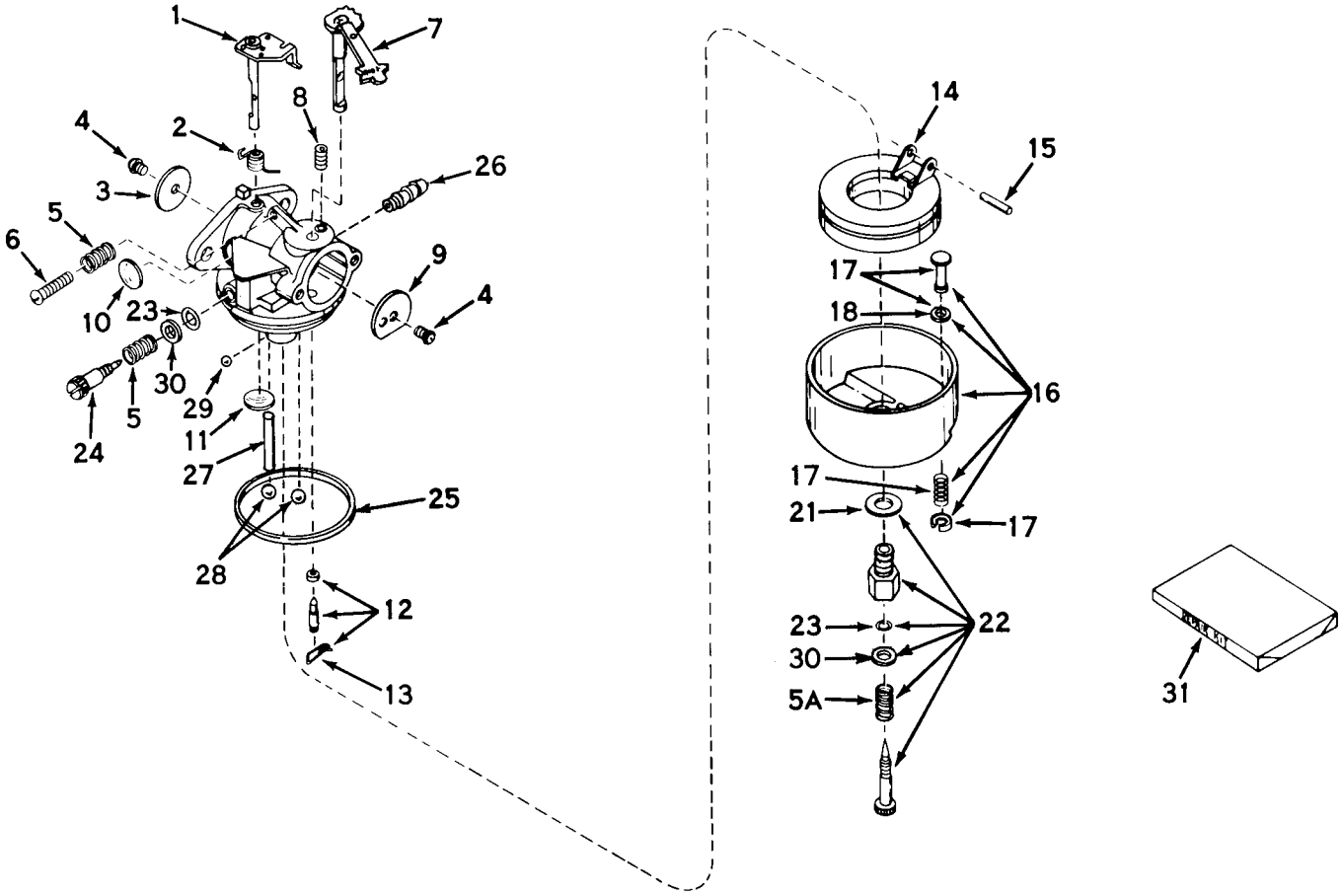

(5 H.P. SNOWTHROWER MODEL NO. 31624)

Ref. No.	Part No.	Description	No. Used
1	31834	Shaft & Lever Ass'y, Throttle	1
2	630731	Spring, Throttle Return	1
3	631036	Shutter, Throttle	1
4	650506	Screw, Rd. Hd.	1
5	630766	Spring, Idle Regulating Screw	1
5A	630738	Spring, Main Adjusting Screw	1
6	650417	Screw, Idle Regulating	1
7	31841	Shaft & Lever Ass'y, Choke	1
8	630735	Spring, Choke Positioning	1
9	31837	Shutter, Choke	1
10	*630748	Plug, Welch	1
11	*631027	Plug, Welch	1
12	*631021	Inlet Needle, Seat & Clip Ass'y (Incl. No. 13)	1
13	631022	Clip, Inlet Needle	1
14	631023	Float, Carburetor	1
15	*631024	Shaft, Float	1
16	631025	Bowl & Drain Ass'y, Float (Incl. No. 17)	1

Ref. No.	Part No.	Description	No. Used
17	27136A	Plunger Ass'y, Drain (Incl. No. 18)	1
18	*27554	Gasket, Drain Plunger	1
21	27110	Gasket, Bowl-to-Body	1
22	*31839	Adjustment Screw Ass'y, Main (Incl. Nos. 5A, 21, 23 & 30)	1
23	*630740	"O" Ring, Adjustment Screw	2
24	*631078	Screw, Idle Adjustment	1
25	*631028	"O" Ring, Bowl-to-Body	1
26	31838	Fitting, Fuel Inlet	1
27	631039	Pin	1
28	630747	Ball, Steel	2
29	631081	Ball, Steel	1
30	630739	Washer, Flat	1
31	31840	Repair Kit (Incl. items marked *)	1

ENGINE, TECUMSEH MODEL NO. H50-65279J

(5 H.P. SNOWTHROWER MODEL NO. 31624)

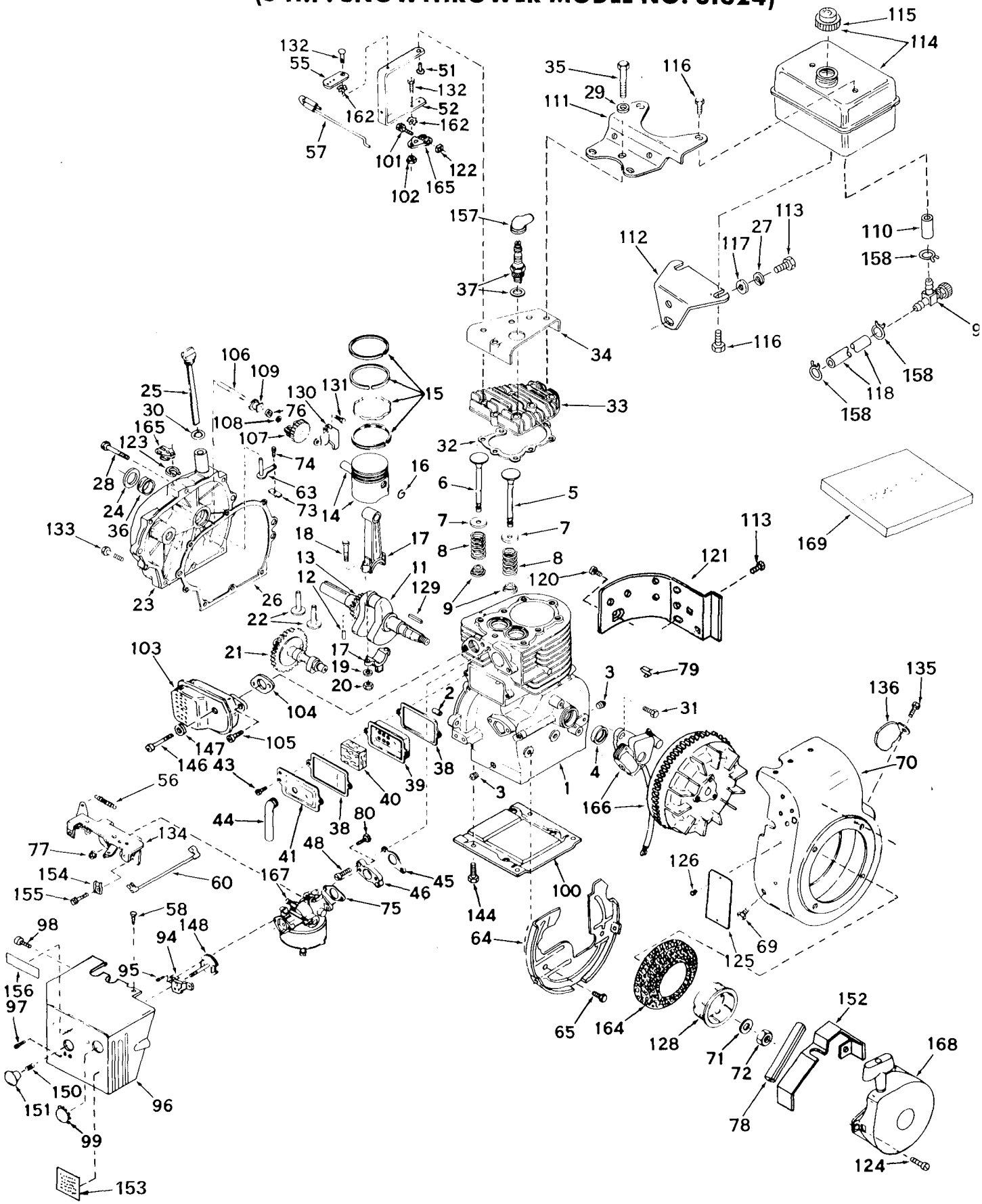

ENGINE, TECUMSEH MODEL NO. H50-65279J

(5 H.P. SNOWTHROWER MODEL NO. 31624)

Ref. No.	Part No.	Description	No. Used
1	33311	Cylinder Assy. (Incl. Nos. 2, 3 & 4)	1
2	27652	Pin, Dowel	2
3	27642	Plug, Sq. Hd. Pipe (Oil Drain)	2
4	27876B	Seal, Oil	1
5	27877A	Valve, Intake (Std.) (Incl. No. 9)	1
5	27879A	Valve, Intake (1/32" Oversize) (Incl. No. 9)	1
6	27878A	Valve, Exhaust (Std.) (Incl. No. 9)	1
6	27880A	Valve, Exhaust (1/32" Oversize) (Incl. No. 9)	1
7	27882	Cap, Upper Valve Spring	2
8	27881	Spring, Valve	2
9	32581	Cap, Lower Valve Spring	2
11	30813	Crankshaft Assy. (Incl. Nos. 12 & 13)	1
12	29783	Pin, Groove	1
13	27884	Gear, Crankshaft	1
14	33312	Piston & Pin Assy. (Incl. 2 of No. 16) (Standard)	1
14	33313	Piston & Pin Assy. (Incl. 2 of No. 16) (.010 Oversize)	1
14	33314	Piston & Pin Assy. (Incl. 2 of No. 16) (.020 Oversize)	1
15	33315	Ring Set, Piston (Standard)	1
15	33316	Ring Set, Piston (.010 Oversize)	1
15	33317	Ring Set, Piston (.020 Oversize)	1
16	27888	Ring, Piston Pin Retaining	2
17	31295B	Rod Assy., Connecting (Incl. Nos. 18, 19 & 20)	1
18	21718	Bolt, Connecting Rod	2
19	26073	Washer, Connecting Rod	2
20	28264	Nut, Lock	2
21	33156	Camshaft (Compression Release)	1
22	27893	Lifter, Valve	2
23	31303B	Cover, Cylinder (Incl. Nos. 24 & 106)	1
24	28427	Seal, Oil	1
25	31297	Dipstick, Oil (Incl. No. 30)	1
26	*30684	Gasket, Cylinder Cover	1
27	8303	Lockwasher, Heavy, Split	1
28	650488	Screw, Hex Hd. Sems	7
29	26073	Washer	2
30	*29673	Gasket, Dipstick	1
31	650489	Screw, Hex Hd. Sems with Flatwasher	2
32	*28938B	Gasket, Cylinder Head	1
33	30938A	Head, Cylinder	1
34	30939	Cover, Cylinder Head	1
35	650697	Screw, Hex Hd. Cap	8
36	31546	Bushing, Crankshaft	1
37	21943	Plug, Spark	1
38	*27896	Gasket, Valve Spring Cover	2
39	28423	Body Assy., Breather	1
40	28424	Element, Filter	1
41	28425	Cover, Valve Spring	1
43	650128	Screw, Fil. Hd. Sems	2
44	27627	Tube, Breather	1
45	*27915	Gasket, Intake	1
46	30195A	Flange, Carburetor (Incl. Nos. 77 & 80)	1
48	30196	Screw, Fil. Hd. Mach. P.C.R.	2
51	30319	Rivet, Split	1
52	31709	Lever, Governor	1
55	30205	Bracket, Governor Adjusting	1
56	30826	Spring, Extension	1
57	30824	Link, Governor-to-Throttle	1
58	650701	Screw, Hex, Washer Hd. Self-Tapped	1
60	28468	Wire, Ground	1
63	30699A	Rod Assy., Governor	1
64	29536	Baffle, Blower Housing	1
65	650561	Screw, Hex Hd. Sems	2
69	29747A	Screw, Hex Hd. Cap	2
70	32158B	Housing, Blower	1
71	650490	Washer, Belleville	1
72	8116	Nut, Crankshaft	1
73	30700	Yoke, Governor	1
74	650494	Screw, Phil. Fil. Hd. Sems	1
75	*31688	Gasket, Carburetor	1
76	30590A	Washer, Flat	1
77	29752	Nut, Hex, w/Lockwasher	2
78	32576	Seal, Snowguard	2
79	27275	Clip, Lead Wire	2
80	650572	Screw, Phil. Flat Hd. Sems	2
92	32961	Valve, Shut-Off	1

ENGINE, TECUMSEH MODEL NO. H50-65279J (Continued)

(5 H.P. SNOWTHROWER MODEL NO. 31624)

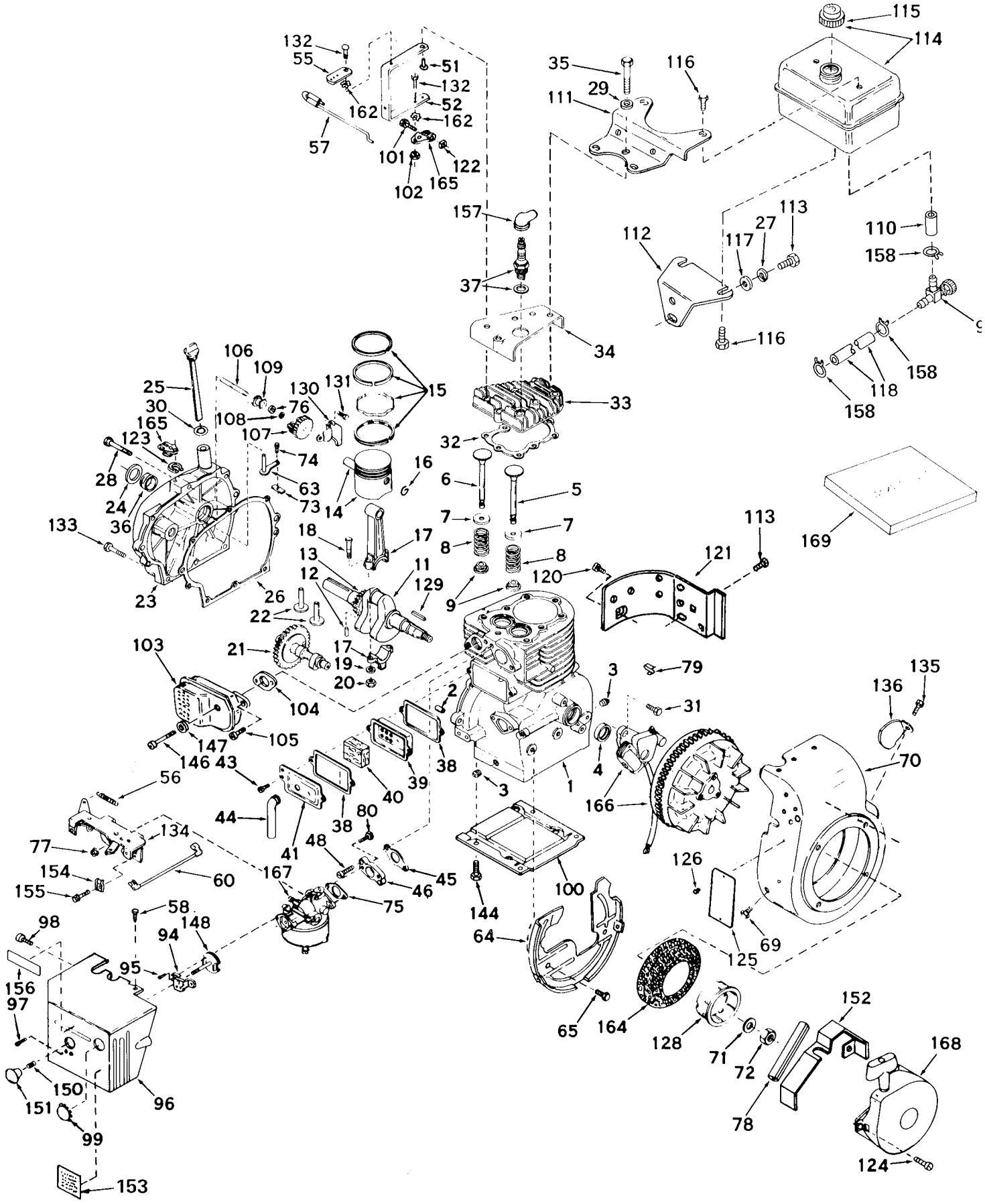

ENGINE, TECUMSEH MODEL NO. H50-65279J (Continued)
(5 H.P. SNOWTHROWER MODEL NO. 31624)

Ref. No.	Part No.	Description	No. Used
94	32398	Bracket, Carburetor Cover	1
95	28820	Screw, Phil. Fil. Hd. Mach. Sems	2
96	32911	Cover, Carburetor	1
97	650257	Screw, Phil. Fil. Hd. Mach.	2
98	650687	Screw, Pan Hd. Metal	1
99	31291	Plug, Cover	1
100	29538	Base, Engine	1
101	29826	Screw, Hex Washer Hd.	1
102	30322	Nut, Lock	1
103	32401	Muffler	1
104	*27930	Gasket, Exhaust	1
105	30196	Screw, Fil. Hd. Mach. P.C.R.	1
106	31845	Shaft, Mechanical Governor	1
107	30591	Gear Assy., Governor	1
108	29193	Ring, Retaining	1
109	30588A	Spool, Governor	1
110	29774	Line, Fuel	1
111	33166	Bracket, Fuel Tank – Upper	1
112	33167	Bracket, Fuel Tank – Lower	1
113	650561	Screw, Hex Hd. Sems	1
114	33120	Tank Assy., Fuel (Incl. Nos. 115 & 116)	1
115	30998B	Cap, Fuel Tank	1
116	650665	Screw, Hex Hd. Sems	4
117	650675	Washer, Flat	1
118	30962	Line, Fuel	1
120	650128	Screw, Fil. Hd. Sems	1
121	30622	Extension, Blower Housing	1
122	29216	Nut, Square	1
123	29642	Ring, Retainer	1
124	29716	Screw, Pan Hd. Sems	4
125	31345	Plate, Identification	1
126	29309	Stud, Drive	2
128	32125	Cup, Starter	1
129	30884	Key, Flywheel	1
130	31843A	Bracket, Governor	1
131	28763	Screw, Slotted Hex Hd., Thread Cutting	2
132	650548	Screw, Hex Slotted Washer Hd.	2
133	650493	Screw, Hex Hd. Sems	1
134	33108	Bracket Assy., Speed Control (Incl. No. 56)	1
135	650687	Screw, Pan Hd. Metal	1
136	33013	Cover, Starter Bubble	1
144	650542	Screw, Hex Hd. Cap	4
146	650694	Screw, Hex Hd. Cap	1
147	26073	Washer	1
148	32397	Plate, Choke	1
150	32399	Spring, Compression	1
151	32400	Knob, Choke	1
152	31680	Guard, Starter	1
153	31682	Decal, Operating	1
154	27793	Clip, Conduit	1
155	28942	Screw, Hex Hd. Sems	1
156	31683	Decal, Choke	1
157	610118	Cover, Spark Plug	1
158	26460	Clamp, Fuel Line	3
162	29918	Lockwasher	2
164	590417	Screen Starter Cup	1
165	29916	Clamp, Governor	1
166	610694A	Magneto	1
167	630992B	Carburetor	1
168	590473	Starter Assy., Rewind	1
169	33235	Gasket Set (Incl. Items Marked *)	1

ENGINE TECUMSEH MODEL NO. H70-130176A
(7 H.P. SNOWTHROWER MODEL NO. 31677)

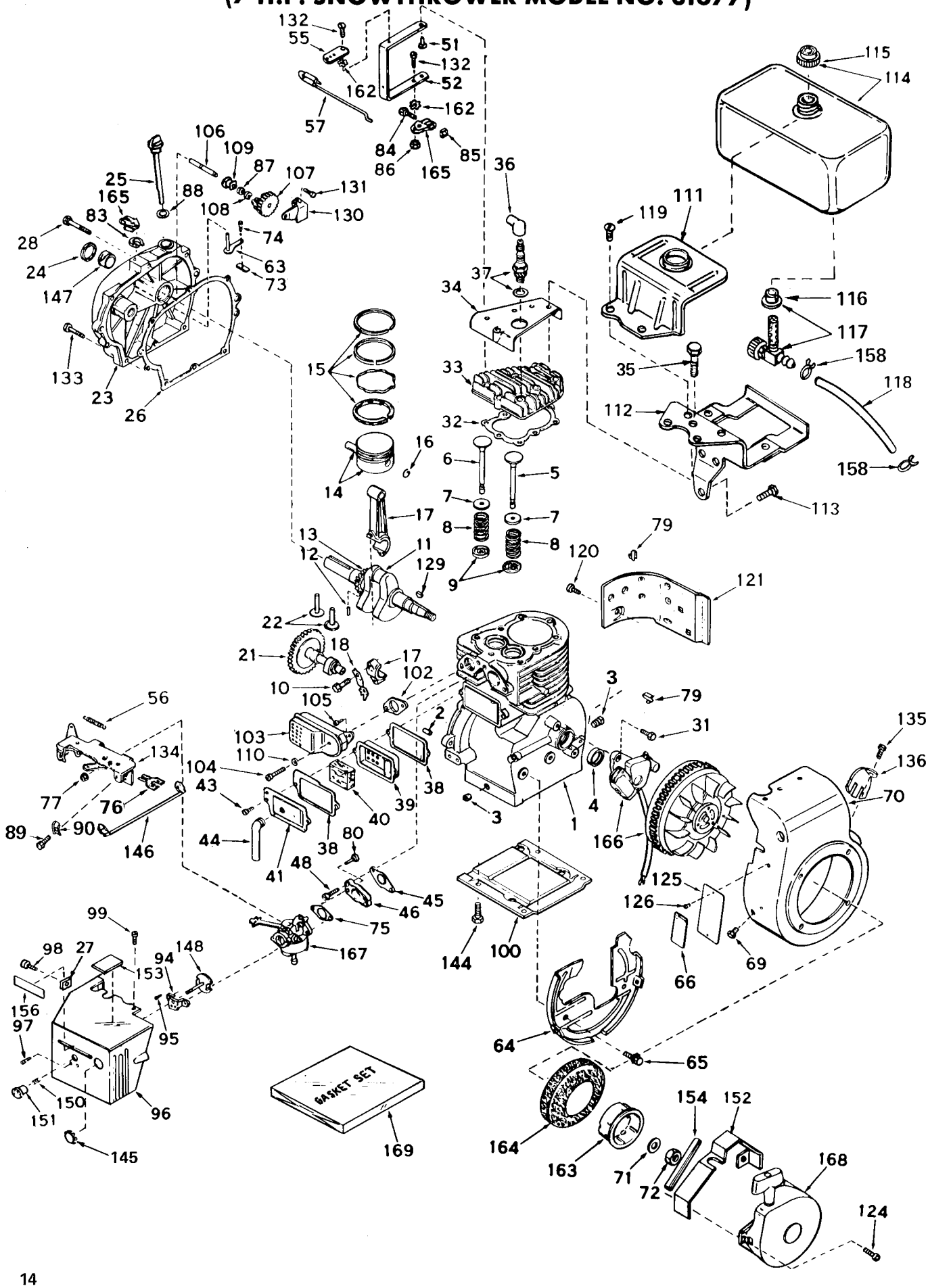

ENGINE TECUMSEH MODEL NO. H70-130176A
(7 H.P. SNOWTHROWER MODEL NO. 31677)

Ref. No.	Part No.	Description	No. Used
1	32586B	Cylinder Assy. (Incl. Nos. 2, 3 & 4)	1
2	27652	Pin, Dowel	2
3	27642	Plug, Sq. Hd. Pipe (Oil Drain)	2
4	32630	Seal, Oil	1
5	32783	Valve, Intake (Std.) (Incl. No. 9)	1
5	32784	Valve, Intake (1/32" Oversize) (Incl. No. 9)	1
6	27878A	Valve, Exhaust (Std.) (Incl. No. 9)	1
6	27880A	Valve, Exhaust (1/32" Oversize) (Incl. No. 9)	1
7	27882	Cap, Upper Valve Spring	2
8	27881	Spring, Valve	1
9	32581	Cap, Lower Valve Spring	2
10	650662	Bolt, Connecting Rod	2
11	32587	Crankshaft Assy. (Incl. Nos. 12 & 13)	1
12	29783	Pin, Crankshaft Gear	1
13	27884	Gear, Crankshaft	1
14	32592	Piston & Pin Assy. (Incl. 2 of No. 16) (Standard)	1
14	32593	Piston & Pin Assy. (Incl. 2 of No. 16) (.010 Oversize)	1
14	32594	Piston & Pin Assy. (Incl. 2 of No. 16) (.020 Oversize)	1
15	32595	Ring Set, Piston (Standard)	1
15	32596	Ring Set, Piston (.010 Oversize)	1
15	32597	Ring Set, Piston (.020 Oversize)	1
16	27888	Ring, Piston Pin Retaining	2
17	32591A	Rod Assy., Connecting (Incl. Nos. 10 & 18)	1
18	32590	Lock & Dipper, Oil	1
21	32115	Camshaft (Mech. Compression Release)	1
22	27893	Lifter, Valve	2
23	31303B	Cover, Cylinder (Incl. Nos. 24, 106 & 147)	1
24	28427	Seal, Oil	1
25	31297	Dipstick, Oil (Incl. No. 88)	1
26	*30684	Gasket, Cylinder Cover	1
27	650764	Nut, "U" Type	1
28	650488	Screw, Hex Hd. Sems	7
31	650489	Screw, Hex Hd. Sems w/flatwasher	2
32	*32631	Gasket, Cylinder Head	1
33	30938A	Head, Cylinder	1
34	30939A	Cover, Cylinder Head	1
35	650697	Screw, Hex Hd. Cap	8
36	610118	Cover, Spark Plug	1
37	33636	Plug, Spark (Champion J-8 or Equivalent)	1
38	*27896	Gasket, Valve, Spring Cover	2
39	28423	Body Assy., Breather	1
40	28424	Element, Filter	1
41	28425	Cover, Valve Spring	1
43	650128	Screw, Fil. Slotted Hd. Sems	2
44	27627	Tube, Breather	1
45	*27915	Gasket, Intake	1
46	30195A	Flange, Carburetor (Incl. Nos. 77 & 80)	1
48	30196	Screw, Fil. Hd. Mach. P.C.R	2
51	30319	Rivet, Split	1
52	31709	Lever, Governor	1
55	30205	Bracket, Governor Adjusting	1
56	30826	Spring, Extension	1
57	30824	Link, Governor-to-Throttle	1
63	30699A	Rod Assy., Governor	1
64	29536	Baffle, Blower Housing	1
65	650561	Screw, Phil. Hex Hd. Sems	2
66	31681	Decal, Name & Instruction	1
69	29747A	Screw, Hex Hd. Cap, Sems	2
70	32158B	Housing, Blower (Incl. Nos. 135 & 136)	1
71	650490	Washer, Belleville	1
72	8116	Nut, Crankshaft	1
73	30700	Yoke, Governor	1
74	650494	Screw, Phil. Fil. Hd. Sems	1
75	*31688	Gasket, Carburetor	1
76	33177	Terminal	1
77	29752	Nut, Hex, w/Lockwasher	2
79	27275	Clip, Lead Wire	2
80	650572	Screw, Phil. Flat Hd. Sems	2
83	29642	Ring, Retaining	1
84	29826	Screw, Hex Socket Hd., Cap	1
85	29216	Nut, Square	1
86	30322	Nut & Washer	1

ENGINE TECUMSEH MODEL NO. H70-130176A (Continued)

(7 H.P. SNOWTHROWER MODEL NO. 31677)

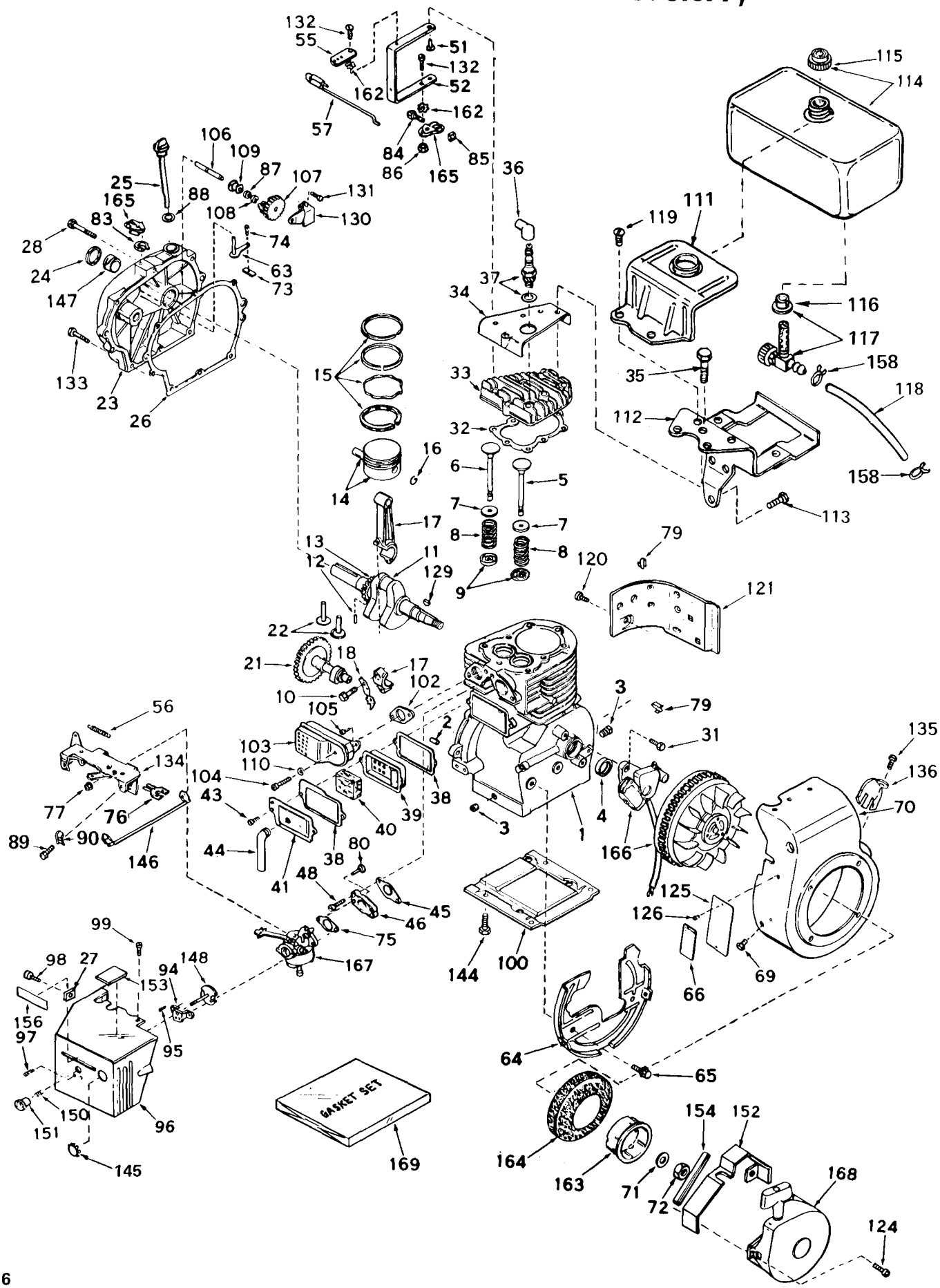

ENGINE TECUMSEH MODEL NO. H70-130176A (Continued)
(7 H.P. SNOWTHROWER MODEL NO. 31677)

Ref. No.	Part No.	Description	No. Used
87	30590A	Washer, Flat	1
88	*29673	Gasket, Oil Dipstick	1
89	28942	Screw, Hex Slotted Hd. Sems	1
90	27793	Clip, Conduit	1
94	32398	Bracket, Carburetor Cover	1
95	28820	Screw, Phil. Fil. Hd. Mach., Sems	2
96	32911	Cover, Carburetor	1
97	650257	Screw, Phil. Pan Hd., Sems	2
98	650760	Screw, Phil. Pan Hd., Tri-roundular Sheet Metal	1
99	650765	Screw, Hex, Washer Hd. Self-Tap	1
100	29538	Base, Engine	1
102	*27930	Gasket Muffler	1
103	32401	Muffler	1
104	650694	Screw, Hex Hd. Cap	1
105	30196	Screw, Fil. Hd. Mach P.C.R.	1
106	31845	Shaft, Mechanical Governor	1
107	30591	Gear Assy., Governor (Incl. No. 87)	1
108	29193	Ring, Retaining	1
109	30588A	Spool, Governor	1
110	26073	Washer	1
111	33352	Plate, Fuel Tank Mounting	1
112	33353	Bracket, Fuel Tank	1
113	650561	Screw, Phil. Hex Hd. Sems	1
114	33350	Tank Assy., Fuel (Incl. No. 115 & 117)	1
115	30998B	Cap, Fuel Tank	1
116	33679	Bushing, Fuel Fitting	1
117	33351	Valve, Fuel Strainer & Shut-off (Incl. No. 116)	1
118	32342	Line, Fuel	1
119	650273	Screw, Fil, Slotted Hd. Sems	2
120	650128	Screw, Fil. Slotted Hd. Sems	1

Ref. No.	Part No.	Description	No. Used
121	30622	Extension, Blower Housing	1
124	29716	Screw & Lockwasher, Pan Hd. P.C.R.	4
125	31345	Plate, Identification	1
126	29309	Stud, Drive	2
129	32589	Key, Flywheel	1
130	31843A	Bracket, Governor	1
131	28763	Screw, Slotted Hex Hd., thr'd cutting	2
132	650548	Screw, Hex Slotted Washer Hd.	2
133	650493	Screw, Hex Hd. Sems	1
134	33108	Control Assy., Speed (Incl. No. 56)	1
135	650736	Screw, Phil. Pan Hd.	1
136	33013	Cover, Starter Bubble	1
144	650542	Screw, Hex Hd. Cap	4
145	31291	Plug, Button	1
146	28468	Wire, Ground	1
147	31546	Bushing, Crankshaft	1
148	32397	Plate Assy., Choke	1
150	32399	Spring, Compression	1
151	32400	Knob, Choke	1
152	31680	Guard, Starter	1
153	31682	Decal, Operating	1
154	32576	Seal, Snow Guard	2
156	31683	Decal, Choke	1
158	26460	Clamp, Fuel Line	2
162	29918	Lockwasher, No. 8 E.T.	2
163	32125	Cup, Starter	1
164	590417	Screen, Starter Cup	1
165	29916	Clamp, Governor	1
166	610694A	Magneto Assy.	1
167	631459	Carburetor	1
168	590473	Starter Assy., Rewind	1
169	33239	Gasket Set (Incl. items marked*)	1

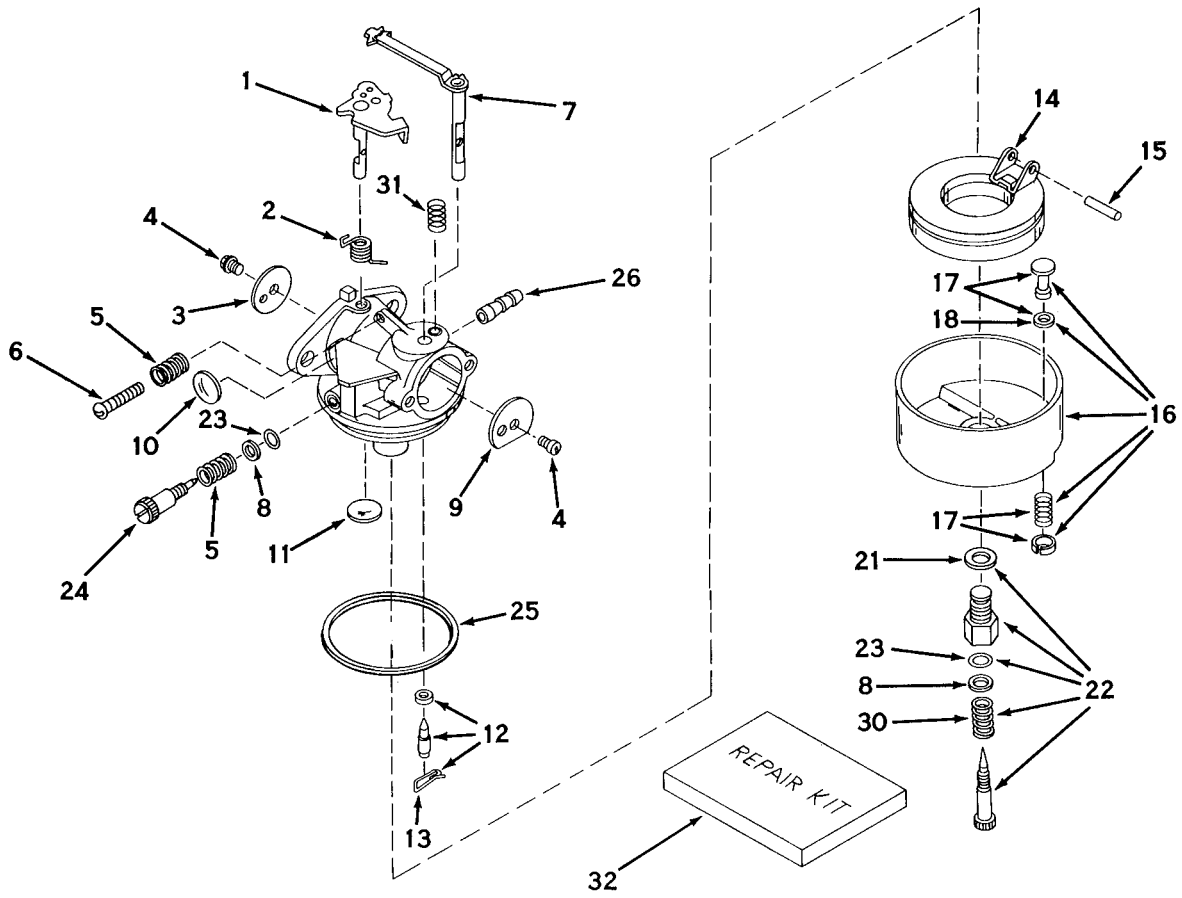

CARBURETOR NO. 631459

(7 H.P. SNOWTHROWER MODEL NO. 31677)

Ref. No.	Part No.	Description	No. Used
1	31834	Shaft & Lever Assy., Throttle	1
2	630731	Spring, Throttle Return	1
3	631036	Shutter, Throttle	1
4	650506	Screw	2
5	630766	Spring, Idle Regulating Screw	2
6	650417	Screw, Idle Regulating	1
7	31841	Shaft & Lever Assy., Choke	1
8	630739	Washer, Flat	2
9	31837	Shutter, Choke	1
10	*630748	Plug, Welch	1
11	*631027	Plug, Welch	1
12	*631021	Inlet Needle, Seat & Clip Assy. (Incl. No. 13)	1
13	631022	Clip, Inlet Needle	1
14	631023	Float, Carburetor	1
15	*631024	Shaft, Float	1

Ref. No.	Part No.	Description	No. Used
16	631025	Bowl & Drain Assy., Float (Incl. No. 17)	1
17	27136A	Plunger Assy., Drain (Incl. No. 18)	1
18	*27554	Gasket, Drain Plunger	1
21	27110	Gasket, Bowl-to-Body	1
22	*31839	Adjustment Screw Assy., Main (Incl. Nos. 8, 21, 23 & 30)	1
23	*630740	"O" Ring, Adjustment Screw	2
24	*631078	Screw, Idle Adjustment	1
25	*631028	Gasket, Bowl-to-Body	1
26	631133	Fitting, Fuel Inlet	1
30	630738	Spring, Main Adjustment Screw	1
31	630735	Spring, Choke Stop	1
32	31840	Repair Kit (Incl. items marked*)	1

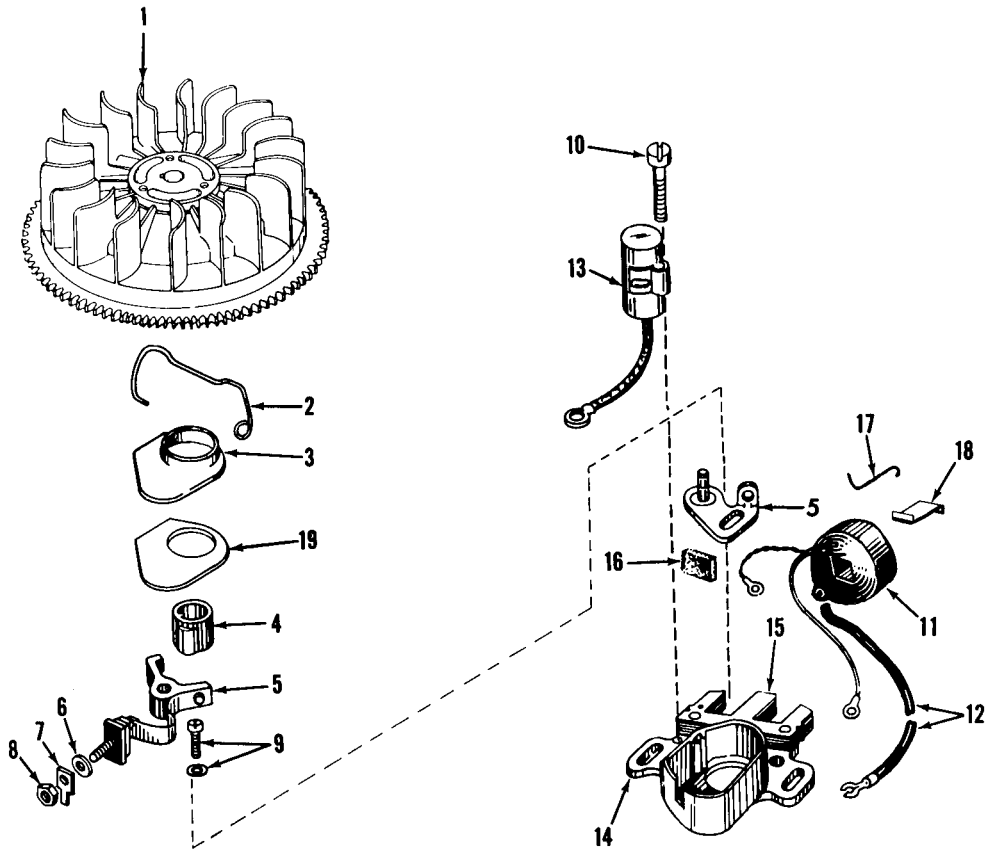

MAGNETO NO. 610694A

(5 & 7 H.P. SNOWTHROWER MODEL NO. 31624 & 31677)

Ref. No.	Part No.	Description	No. Used
1	30811	Flywheel	1
2	30551	Spring, Breaker Box	1
3	30550	Cover, Breaker Box Dust	1
4	30992	Cam, Breaker	1
5	30547A	Contact Assy., Breaker	1
6	610385	Washer, Terminal	1
7	30843	Tab, Ground Terminal	1
8	610408	Nut, Terminal	1
9	29181	Screw & Washer, Breaker	1
10	610593	Screw, Condenser Fastening	1

Ref. No.	Part No.	Description	No. Used
11	30560A	Coil Assy., (Incl. No. 12)	1
12	30554	Wire, Lead	1
13	30548A	Condenser	1
14	30545	Core & Plate	1
15	30561A	Stator Assy., (Incl. Nos. 2, 3, 5 thru 14 & 16 thru 19)	1
16	30549	Felt, Cam Wiper	1
17	31311	Clip, Coil Locking	1
18	29629	Spring, Coil Wedge	1
19	33695	Gasket, Dust Cover	1

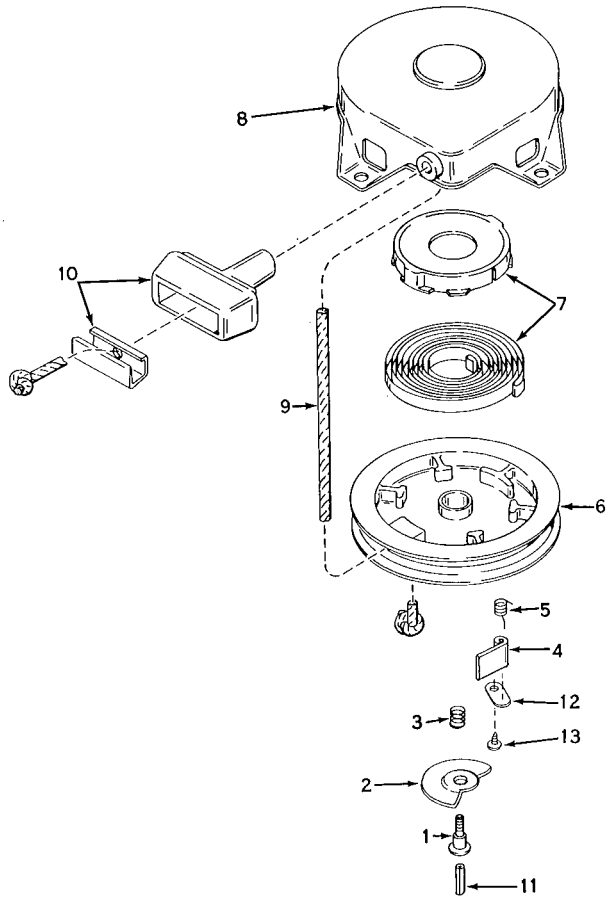

REWIND STARTER NO. 590473

(5 & 7 H.P. SNOWTHROWER MODEL NO. 31624 & 31677)

Ref. No.	Part No.	Description	No. Used
1	590409	Screw	1
2	590474	Cam, Dog	1
3	590411	Spring, Brake	1
4	590148	Dog, Starter	1
5	590475	Spring, Dog	1
6	590478	Pulley	1
7	590414	Spring & Keeper Assembly	1

Ref. No.	Part No.	Description	No. Used
8	590415	Housing Assembly, Starter	1
9	590386	Rope, Starter	1
10	590387	Handle Assembly, Starter	1
11	590459	Pin, Centering	1
12	590476	Retainer, Dog	1
13	590477	Screw	1