Form No. 3325-508

TORO®

# Recycler®

## Walk Power Lawn Mower

**Model No. 20022—210000001 and Up**
**Model No. 20023—210000001 and Up**
**Model No. 20025—210000001 and Up**
**Model No. 20027—210000001 and Up**
**Model No. 20035—210000001 and Up**

# Operator's Manual

Para obtener una versión gratis de este manual en español, escriba a la dirección indicada más abajo. Asegúrese de indicar el modelo y el número de serie de su producto.

Pour obtenir gratuitement une version en français de ce manuel, écrivez à l'adresse ci-dessous. N'oubliez pas d'indiquer les numéros de modèle et de série de votre produit.

The Toro Company, Attn: Parts Dept., 8111 Lyndale Ave S, Bloomington, MN 55420-1196.

Domestic English (EN)

# Contents


| | Page |
|---|---|
| Introduction | 2 |
| Safety | 3 |
| General Lawn Mower Safety | 3 |
| Safety and Instruction Decals | 5 |
| Assembly | 6 |
| Unpacking the Lawn Mower | 6 |
| Installing the Handle | 6 |
| Installing the Fuse | 7 |
| Before Starting | 7 |
| Filling the Crankcase with Oil | 7 |
| Filling the Fuel Tank with Gasoline | 8 |
| Operation | 9 |
| Controls | 9 |
| Starting the Engine | 9 |
| Stopping the Engine | 9 |
| Using the Self-propel Drive | 10 |
| Adjusting the Cutting Height | 10 |
| Installing the Grass Bag | 10 |
| Operating Tips | 12 |
| Maintenance | 14 |
| Recommended Maintenance Schedule | 14 |
| Checking the Engine Oil Level | 15 |
| Cleaning the Underside of the Lawn Mower Housing | 15 |
| Servicing the Air Filter | 15 |
| Changing the Engine Oil | 17 |
| Maintaining the Cutting Blade | 18 |
| Adjusting the Self-propel Drive Cable | 19 |
| Lubricating the Self-propel Drive | 20 |
| Cleaning Under the Belt Cover | 20 |
| Maintaining the Spark Plug | 20 |
| Changing the Fuse | 21 |
| Charging the Battery | 21 |
| Disposing of the Battery | 22 |
| Emptying the Fuel Tank | 22 |
| Storage | 22 |
| Preparing the Fuel System | 22 |
| Preparing the Engine | 23 |
| General Information | 23 |
| Folding the Handle | 23 |
| Removing From Storage | 23 |
| Accessories | 24 |
| Rear Grass Catcher | 24 |
| Side Discharge Chute | 26 |
| Discharge Tunnel Plug | 27 |
| Troubleshooting | 28 |
| The Toro Starting Guarantee | 30 |
| The Toro Total Coverage Guarantee | 32 |


# Introduction

Read this manual carefully to learn how to operate and maintain your product properly. The information in this manual can help you and others avoid injury and product damage. Although Toro designs and produces safe products, you are responsible for operating the product properly and safely.

Whenever you need service, genuine Toro parts, or additional information, contact an Authorized Service Dealer or Toro Customer Service and have the model and serial numbers of your product ready. Figure 1 illustrates the location of the model and serial numbers on the product.

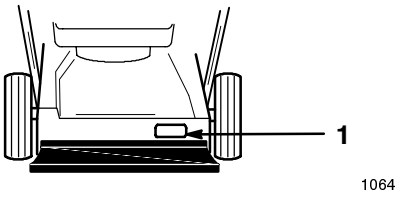


**Figure 1**

1. Location of the model and serial numbers

Write the product model and serial numbers in the space below:

**Model No.** _____

**Serial No.** _____

This manual identifies potential hazards and has special safety messages that help you and others avoid personal injury and even death. ***Danger***, ***Warning***, and ***Caution*** are signal words used to identify the level of hazard. However, regardless of the hazard, be extremely careful.

***Danger*** signals an extreme hazard that *will* cause serious injury or death if you do not follow the recommended precautions.

***Warning*** signals a hazard that *may* cause serious injury or death if you do not follow the recommended precautions.

***Caution*** signals a hazard that may cause minor or moderate injury if you do not follow the recommended precautions.

This manual uses two other words to highlight information. **Important** calls attention to special mechanical information and **Note:** emphasizes general information worthy of special attention.

© 2000 by The Toro Company
8111 Lyndale Avenue South
Bloomington, MN 55420-1196



All Rights Reserved
Printed in the USA

# Safety

**This lawn mower meets or exceeds the CPSC blade safety requirements for walk-behind rotary lawn mowers and the B71.1 specifications of the American National Standards Institute in effect at the time of production.**

**Improperly using or maintaining this lawn mower can result in injury. To reduce the potential for injury, comply with these safety instructions.**

Toro designed and tested this lawn mower for to offer reasonably safe service; however, *failure to comply with the following instructions may result in personal injury.*

**Warning**

**Engine exhaust contains carbon monoxide, an odorless, deadly poison that can kill you.**

**Do not run the engine indoors or in an enclosed area.**

**To ensure maximum safety, best performance, and to gain knowledge of the product, it is essential that you and any other operator of the lawn mower read and understand the contents of this manual before the engine is ever started. Pay particular attention to the safety alert symbol ⚠ which means *caution*, *warning*, or *danger* — "personal safety instruction." Read and understand the instruction because it has to do with safety. Failure to comply with the instruction may result in personal injury.**

## General Lawn Mower Safety

The following instructions have been adapted from the ANSI/OPEI standard B71.1—1998 and ISO standard 5395:1990(E). Information or terminology specific to Toro lawn mowers is enclosed in parenthesis.

This lawn mower is capable of amputating hands and feet and of throwing objects. Failure to observe the following safety instructions could result in serious injury or death.

### Training

- Read this operator's manual carefully. Be thoroughly familiar with the controls and the proper use of the lawn mower before starting it.
- Never allow children to operate the lawn mower. Local regulations may restrict the age of the operator.
- Never allow adults unfamiliar with these instructions to operate the lawn mower.
- Never mow while people (especially children) or pets are nearby. Stop the lawn mower if anyone enters the area.
- Tragic accidents can occur if the operator is not alert to the presence of children. Children are often attracted to the lawn mower and the mowing activity. Never assume that children will remain where you last saw them.
- Keep children out of the mowing area and under the watchful care of a responsible adult.
- Be alert and turn the lawn mower off if children enter the area.
- Use extra care when approaching blind corners, shrubs, trees, or other objects that may obscure vision.
- Keep in mind that the operator or user is responsible for accidents or hazards occurring to other people or their property.
- See the manufacturer's instructions for proper operation and installation of accessories. Use only the accessories that are approved by the manufacturer.

### Preparation

- Thoroughly inspect the area where you will use the lawn mower, and remove all stones, sticks, wires, bones, and other foreign objects.
- While mowing, always wear substantial footwear and long trousers.
- Do not operate the lawn mower when barefoot or wearing open sandals.
- Always wear safety goggles or safety glasses with side shields when operating the lawn mower.
- Warning: Gasoline is highly flammable. Take the following precautions:
  - Store fuel in containers specifically designed for this purpose.
  - Refuel outdoors only and do not smoke while refuelling.
  - Add fuel before starting the engine. Never remove the cap of the fuel tank or add gasoline while the engine is running or when the engine is hot.
  - If gasoline is spilled, do not attempt to start the engine. Move the lawn mower away from the area of spillage to avoid creating any source of ignition until the gasoline vapors have dissipated.
  - Replace all fuel tank and container caps securely.
  - If you must drain the fuel from the fuel tank, do it outdoors.
- Replace faulty mufflers.

- Before using, always visually inspect the blades, blade bolts, and cutter assembly for wear or damage. Replace worn or damaged blades and bolts in sets to preserve balance.
- On multibladed lawn mowers, use care as rotating one blade can cause the other blades to rotate.

## Operation

- Do not operate the engine in a confined space where dangerous carbon monoxide fumes can collect.
- Mow only in daylight or in good artificial light.
- Always be sure of your footing on slopes.
- Walk; never run.
- Keep a firm hold on the handle.
- For wheeled rotary lawn mowers, mow across the face of slopes, never up and down.
- Exercise extreme caution when changing the direction on slopes.
- Do not mow excessively steep slopes.
- Use extreme caution when reversing or pulling the lawn mower toward you.
- Before and while moving backward, look behind and down for small children.
- Stop the blade(s) if you must tilt the lawn mower for transportation when crossing surfaces other than grass and when transporting the lawn mower to and from the area to be mowed.
- Never operate the lawn mower with damaged or missing guards or shields, or without safety devices (such as deflectors and grass catchers) in place.
- Do not change the speed settings on the engine.
- Disengage all blade and drive clutches before starting the engine.
- Start the engine carefully according to instructions and with feet well away from the blade(s).
- Do not tilt the lawn mower when starting the engine, unless you must tilt the lawn mower to start it. In this case, do not tilt it more than absolutely necessary and lift only the part which is away from the operator.
- Do not start the engine when standing in front of the discharge chute.
- Do not put your hands or feet near or under rotating parts. Keep clear of the discharge opening at all times.
- Never pick up or carry a lawn mower while the engine is running.
- Stop the engine and disconnect the spark-plug wire:
  - before clearing blockages or unclogging the chute;
  - before checking, cleaning, or working on the lawn mower;
  - after striking a foreign object. Inspect the lawn mower for damage and make repairs before starting and operating the lawn mower; and
  - if the lawn mower starts to vibrate abnormally (check it immediately).
- Stop the engine:
  - whenever you leave the lawn mower; and
  - before refuelling.
- Reduce the throttle setting during engine run-out and, if the engine has a shutoff valve, turn the fuel off after mowing.
- Stop the blade(s) when crossing gravel drives, walks, or roads.
- Shut the engine off and wait until the blade comes to a complete stop before removing the grass catcher.
- Do not operate the lawn mower while under the influence of alcohol or drugs.
- If the lawn mower should start to vibrate abnormally, stop the engine and check immediately for the cause. Vibration is generally a warning of trouble.

Slopes are a major factor related to slip and fall accidents which can result in a severe injury. If you feel uneasy on a slope, do not mow it.

- Watch for holes, ruts, or bumps. Tall grass can hide obstacles.
- Do not mow near drop-offs, ditches, or embankments. You could lose your footing or balance.
- Do not mow on wet grass. Reduced footing could cause slipping.

## Maintenance and Storage

- Keep all nuts, bolts (especially blade attachment bolts), and screws tight to ensure that the lawn mower is in safe working condition.
- Never store the lawn mower with gasoline in the tank inside a building where fumes may reach an open flame or spark.
- Allow the engine to cool before storing the lawn mower in any enclosure.
- To reduce the fire hazard, keep the engine, muffler, battery compartment, and gasoline storage area free of grass, leaves, or excessive grease.
- Check the grass catcher frequently for wear or deterioration.

- Replace worn or damaged parts.
- Use extra care when handling gasoline; gasoline vapors are explosive.
- Never tamper with safety devices. Check their proper operation regularly.
- Keep the lawn mower free of grass, leaves, or other debris buildup. Clean up any oil or fuel that spills.
- Stop and inspect the lawn mower if you strike an object. Repair the lawn mower, if necessary, before starting the engine.
- Never attempt to make wheel height adjustments while the engine is running.
- Grass catcher components are subject to wear, damage, and deterioration, which could expose moving parts or allow objects to be thrown. Frequently check the components and replace them with the manufacturer's recommended parts when necessary.
- Lawn mower blades are sharp and can cut. Wrap the blade(s) or wear gloves, and use extra caution when servicing them.
- Do not change the speed settings on the engine.
- If you must drain the fuel from the fuel tank, do it outdoors.
- To ensure the best performance and safety, purchase only genuine Toro replacement parts and accessories.
- Maintain or replace safety and instruction decals when necessary.

# Safety and Instruction Decals



Safety decals and instructions are easily visible to the operator and are located near any area of potential danger. Replace any decal that is damaged or lost.

**On Mower Housing (Part No. 43-8480)**




**On Rear Height Adjuster (Part No. 92-2914 Right) (Part No. 92-2915 Left)**

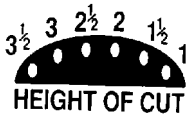


**On Mower Housing (Part No. 93-0248)**




**On Mower Housing (Part No. 99-6018)**

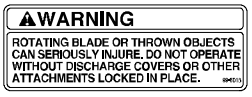

# Assembly

**Note:** Determine the left and right sides of the machine from the normal operating position.

## Unpacking the Lawn Mower

**Warning**

**Folding or unfolding the handle improperly can pinch, stretch, or damage one or more of the cables. Any pinched, stretched, or damaged cable may cause an operational failure that results in an unsafe operating condition.**

- **Do not pinch, stretch, or damage the cables.**
- **Handle the cables with care when folding or unfolding the handle.**
- **Do not use the lawn mower if one or more of the cables are pinched, stretched, or damaged. Contact your Authorized Service Dealer.**

1. Remove the lawn mower from the box.
2. Lay the upper handle section on the ground behind the lawn mower with the handle label facing up and the control cables routed between the handle mounting brackets (Fig. 2).

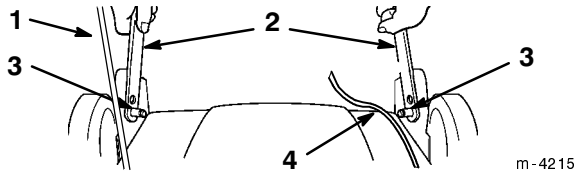


**Figure 2**

1. Starter rope
2. Lower handle section
3. Pins
4. Cable

## Installing the Handle

1. Squeeze the lower handle section ends together, position the holes in the handles over the pins on the handle brackets, and release the handle (Fig. 2).

**Important** Route the cables inside the lower handle section and the starter rope outside the handle.

2. Remove the four handle bolts and knobs installed on the lower handle section.

   **Note:** Two bolts have flat caps and two have contoured caps to fit the handle.

3. Swing the lower handle section back and the support brackets up, aligning the brackets with the holes in the handle (Fig. 3).

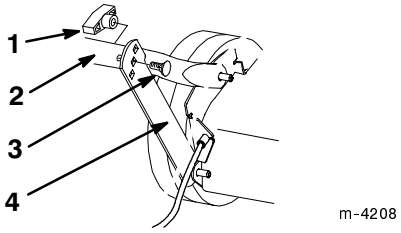


**Figure 3**

1. Knob
2. Lower handle
3. Flat handle bolt
4. Support bracket

4. Secure the handle to the support brackets with the two flat handle bolts and two knobs, using the height adjustment holes on the brackets that best fit your height (Fig. 3).

**Warning**

**Folding or unfolding the handle improperly can pinch, stretch, or damage one or more of the cables. Any pinched, stretched, or damaged cable may cause an operational failure that results in an unsafe operating condition.**

- **Do not pinch, stretch, or damage the cables.**
- **Handle the cables with care when folding or unfolding the handle.**
- **Do not use the lawn mower if one or more of the cables are pinched, stretched, or damaged. Contact your Authorized Service Dealer.**

5. Slide the upper handle section ends over the lower handle section so that the sections nest together (Fig. 4)

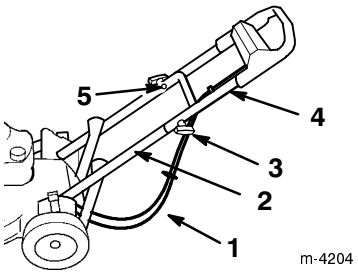


**Figure 4**

1. Cables
2. Lower handle
3. Knob (2)
4. Upper handle
5. Contoured handle bolt (only one shown)

6. Ensure that the cables are routed below and behind the lower handle section as illustrated in Figure 4.
7. Secure the upper handle section to the lower handle section using two contoured handle bolts and two knobs (Fig. 4).

# Installing the Fuse

**Electric Start Model only**

The fuse protects the electric starter. If the battery does not charge or the engine does not turn with the electric starter, the fuse may be blown. Use a 40-amp plug-in type fuse.

**1.** Remove the battery box cover (Fig. 5).

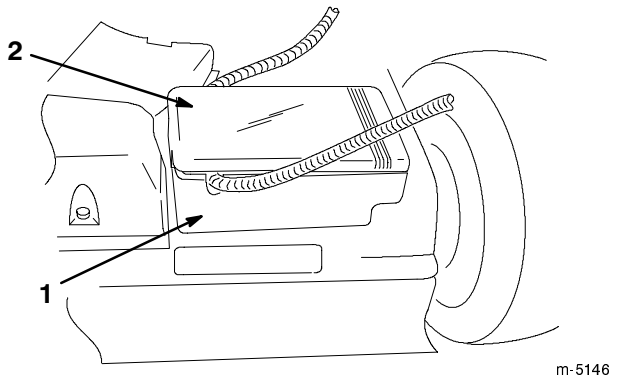


**Figure 5**

1. Battery box 2. Battery box cover

**Note:** Use a flat-head screw driver to unclip the battery cover (Fig. 6). Unclip both ends of the battery cover before removing it to prevent damaging it.

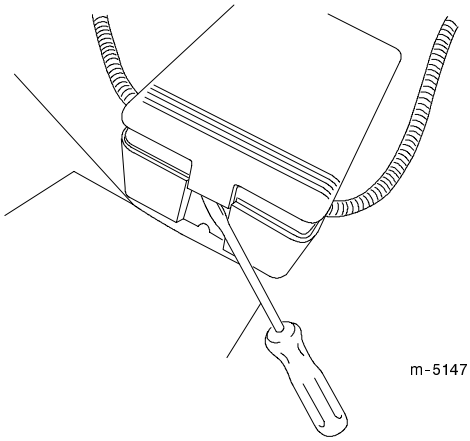


**Figure 6**

**2.** Install the fuse in the fuse holder as shown in Figure 7.

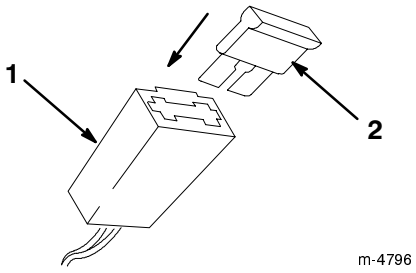


**Figure 7**

1. Fuse Holder 2. Fuse

**3.** Install the battery box cover.

# Before Starting

## Filling the Crankcase with Oil

For Models 20022, 20023, 20025, and 20035, the crankcase can hold 20 ounces (0.59 liters) of oil. For Model 20027, the crankcase can hold 22 ounces (0.65 liters) of oil. Use only high-quality, SAE 30 or SAE 10W30 weight detergent oil that has the American Petroleum Institute (API) service classification SF, SG, SH, or SJ.

Before each use, make sure that the oil level is between the *Add* and the *Full* marks on the dipstick (Fig. 8).

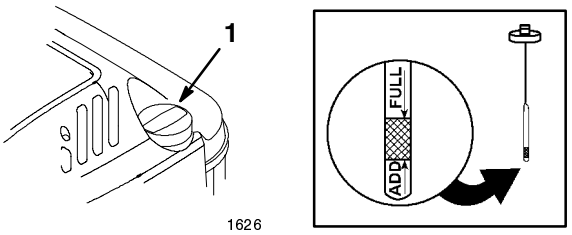


**Figure 8**

1. Dipstick

To add oil:

**1.** Move the lawn mower to a level surface.

**2.** Clean around the dipstick (Fig. 8).

**3.** Remove the dipstick from the oil fill tube by rotating the cap counterclockwise and pulling it out.

**4.** Wipe the dipstick clean with a clean cloth.

**5.** Fully insert the dipstick into the oil fill tube, then remove it.

**Note:** For an accurate oil level reading, you must fully install the dipstick.

**6.** Read the oil level on the dipstick (Fig. 8).

7. If the oil level reading is below the *Add* mark on the dipstick, **slowly** pour only enough oil into the oil fill tube to raise the oil level to the *Full* mark on the dipstick.

**Important** Do not overfill the crankcase with oil and run the engine; engine damage can result. Drain the excess oil until the oil level on the dipstick reads *Full*.

8. Insert the dipstick into the filler neck and rotate the cap clockwise until it is tight.

# Filling the Fuel Tank with Gasoline

For best results, use clean, fresh, lead-free gasoline, including *oxygenated* or *reformulated* gasoline, with an octane rating of 87 or higher. To ensure freshness, purchase only the quantity of gasoline that you expect to use in 30 days. Unleaded gasoline burns cleaner, extends engine life, and promotes good starting. You may use leaded gasoline if unleaded gasoline is not available.

**Important** Do not add oil to the gasoline.

**Important** Do not use methanol, gasoline containing methanol, gasohol containing more than 10% ethanol, premium gasoline, or white gas. Using these fuels can damage the engine's fuel system.

**Important** Do not use gasoline that has been stored since the last mowing season or longer.

**Danger**

**In certain conditions, gasoline is extremely flammable and highly explosive. A fire or explosion from gasoline can burn you and others and can damage property.**

- **Fill the fuel tank outdoors, in an open area, and when the engine is cold. Wipe up any gasoline that spills.**
- **Do not fill the fuel tank completely full. Add gasoline to the fuel tank until the level is 1/4 to 1/2 in. (6 to 13 mm) below the bottom of the filler neck. This empty space in the tank allows the gasoline to expand.**
- **Never smoke when handling gasoline, and stay away from an open flame or where a spark may ignite the gasoline fumes.**
- **Store gasoline in an approved fuel container and keep it out of the reach of children.**
- **Never buy more than a 30-day supply of gasoline.**

**Danger**

**When fueling, under certain circumstances, a static charge can develop, igniting the gasoline. A fire or explosion from gasoline can burn you and others and damage property.**

- **Always place gasoline containers on the ground and away from your vehicle before filling.**
- **Do not fill gasoline containers inside a vehicle or on a truck or trailer bed because interior carpets or plastic truck bed liners may insulate the container and slow the loss of any static charge.**
- **When practical, remove gasoline-powered equipment from the truck or trailer and refuel the equipment with its wheels on the round.**
- **If this is not possible, then refuel such equipment on a truck or trailer from a portable container, not from a gasoline dispenser nozzle.**
- **If you must use a gasoline dispenser nozzle, keep the nozzle in contact with the rim of the fuel tank or container opening at all times until fueling is complete.**

Use a fuel stabilizer/conditioner regularly during operation and storage. A stabilizer/conditioner cleans the engine during operation and prevents gum-like varnish deposits from forming in the engine during periods of storage.

**Important** Do not use fuel additives other than a fuel stabilizer/conditioner. Do not use fuel stabilizers with an alcohol base such as ethanol, methanol, or isopropanol.

1. Clean around the fuel tank cap (Fig. 9).

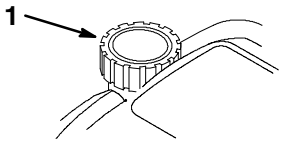


1626

**Figure 9**

1. Fuel tank cap

2. Remove the fuel tank cap from the tank.
3. Fill the fuel tank with unleaded gasoline to within 1/4 to 1/2 inch (6 to 13 mm) from the top of the tank. **Do not fill into the filler neck.**
4. Install the fuel tank cap and wipe up any spilled gasoline.

# Operation

**Note:** Determine the left and right sides of the machine from the normal operating position.

Each time before you mow, make sure that the self-propel drive and the blade control bail operate properly. When you release the blade control bail, the engine and the blade should stop. If they do not, contact an Authorized Service Dealer.

## Controls

The starter handle and the blade control bail are on the upper handle as shown in Figure 10.

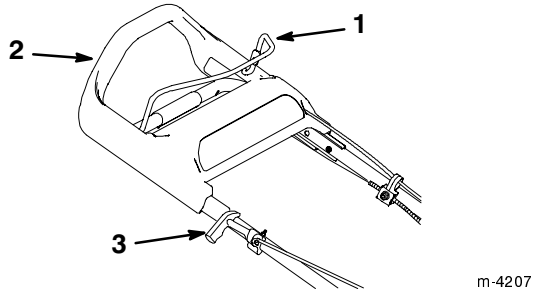


**Figure 10**

1. Blade control bail
2. Upper handle
3. Starter handle

## Starting the Engine

**1.** Connect the wire to the spark plug (Fig. 11).

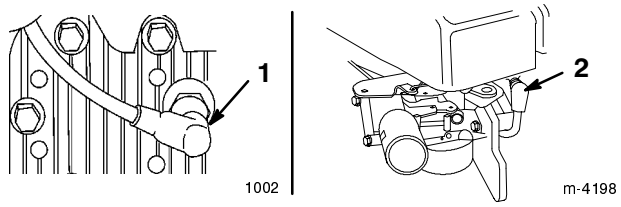


**Figure 11**

1. Spark-plug wire (All models except 20027)
2. Spark-plug wire (Model 20027)

**2.** Push the primer three times, waiting two seconds between each push (Fig. 12).

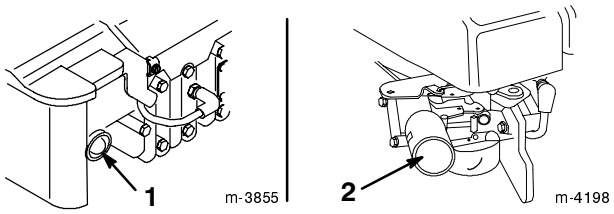


**Figure 12**

1. Primer (All models except 20027)
2. Primer (Model 20027)

**Note:** If the temperature is 55°F (13°C) or below, push the primer five times, waiting two seconds between each push.

**Note:** Do not use the primer to start a warm engine after a brief shutdown. However, cool weather may require you to prime the engine again.

**3.** Hold the blade control bail against the upper handle (Fig. 10).

**4.** Start the lawn mower.

- **Manual Starting**—Pull the starter handle lightly until you feel resistance, then pull it sharply (Fig. 10). Allow the rope to return to the handle slowly.
- **Electric Starting (electric start model only)**—Insert the key into the switch. Turn the key to the right and release it when the engine starts (Fig. 13).

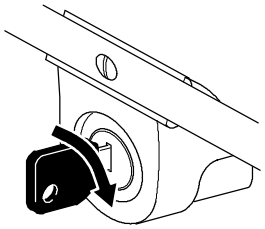

**Figure 13**

**Note:** If the battery charge is too low to start the engine, start the engine manually.

**Note:** If the engine fails to start after three attempts, repeat steps 2 through 4.

## Stopping the Engine

Release the blade control bail. Both the engine and the blade should stop. If they do not stop properly, contact your Authorized Service Dealer.

## Using the Self-propel Drive

To operate the self-propel drive, simply walk forward with your hands on the upper handle. As you move forward, the upper handle will slide toward the lawn mower, activating the self-propel drive. The faster you walk, the farther the handle will slide and the faster the lawn mower will propel (Fig. 14).

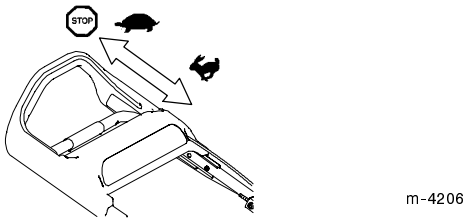


**Figure 14**

**Note:** The lawn mower propels at the maximum speed when you push in the upper handle as far forward as possible.

To slow down the drive, simply slow your walking speed; to stop the drive, stop walking (Fig. 14).

**Note:** If, when backing up after self-propelling, the lawn mower does not roll backward freely, nudge the lawn mower forward about an inch without engaging the self-propel drive, then pull the lawn mower backward.

## Adjusting the Cutting Height

You can adjust each wheel individually with a wheel height adjustment lever. Cutting heights are 1 inch (25 mm); 1-1/2 inches (38 mm); 2 inches (51 mm); 2-1/2 inches (64 mm); 3 inches (74 mm); and 3-1/2 inches (86 mm).

**Danger**

**Adjusting the cutting height levers could bring your hands into contact with a moving blade and result in serious injury.**

- **Stop the engine and wait for all movement to stop before adjusting the cutting height.**
- **Do not put fingers under the housing when adjusting the cutting height.**

1. Pull the wheel height adjustment lever toward the wheel and move it to the desired position (Fig. 15).

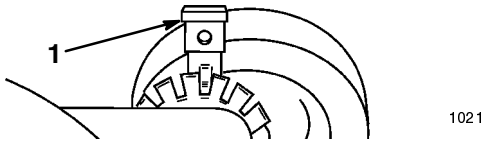


**Figure 15**

1. Wheel height adjustment lever

2. Release the wheel height adjustment lever and seat it securely in the notch.

**Note:** Set all four wheels at the same height.

## Installing the Grass Bag

**Note:** To recycle the grass instead of bagging it, do not install the grass bag and ensure that the discharge tunnel door is closed and secured.

**Danger**

**If the discharge door does not close completely, the lawn mower could throw objects, causing serious personal injury or death.**

**If you cannot close the discharge door because the grass clippings clog the discharge area, stop the engine, wait for all moving parts to stop, and gently move the discharge door handle back and forth until you can close the discharge door completely. If you still cannot close the discharge door, remove the obstruction with a stick, not your hand.**

1. Stop the engine and wait for all moving parts to stop.
2. Ensure that the discharge door handle is fully forward (door closed) as shown in Figure 16.

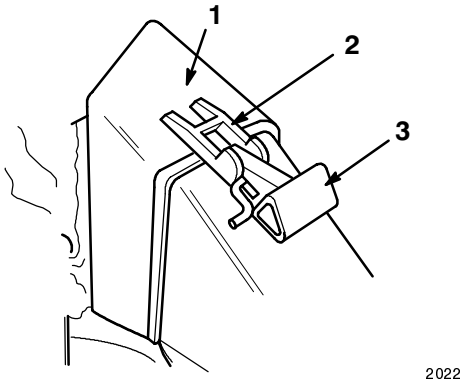


**Figure 16**

1. Bag door
2. Bag door latch
3. Handle fully forward

**Note:** In Figure 16, the brush guard is not shown for the purpose of clarity.

3. Fit the bag door opening over the discharge tunnel opening as shown in Figure 16.

   **Note:** The bag door latch should straddle the door handle, and the bottom of the bag door should engage the lower tunnel bracket (Fig. 17).

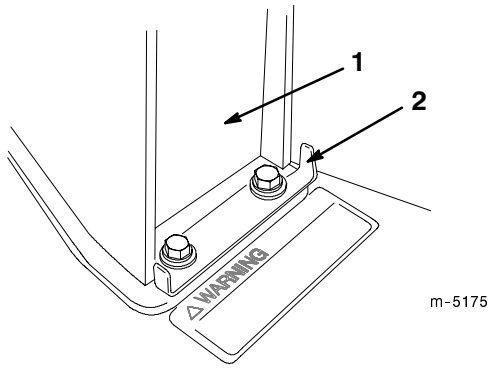


**Figure 17**

1. Discharge tunnel door
2. Lower tunnel bracket

4. Pull the handle rearward until the handle latch locks in the notch in the bag door latch (Fig. 18).

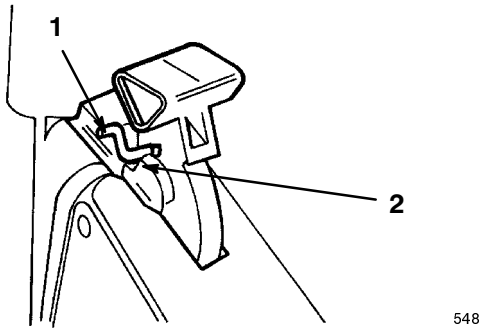


**Figure 18**

1. Handle latch locked in bag notch
2. Notch in bag door latch

   **Note:** In Figure 18, the brush guard is not shown for the purpose of clarity.

   **Note:** The discharge door in the lawn mower housing is now open and the bag is locked into position. The latch should seat in the bottom of the notch.

5. Close the rear of the bag by folding the sides in and pressing the interlocking rear handle halves together (Fig. 19).

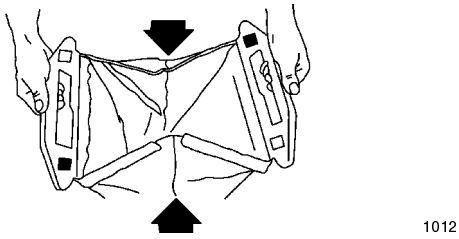


**Figure 19**

6. Hang the rear bag handles on the bag hanger on the handle.

**Note:** The bag should be slightly loose (not taut) on the top cloth area between the front bag handle and the rear bag hanger handles. If the bag is too tight or too loose, adjust it as follows:

A. Remove the bag from the rear bag hanger.

B. Loosen the knobs, slide the hanger up or down in the clamps, and tighten the knobs (Fig. 49); if you need to adjust the bag more, go to Step C.

C. Remove the bolts and knobs that secure the hanger clamps to the handle sections (Fig. 49).

D. Assemble the hanger clamps on the handle sections, using the set of holes that best holds the bag in the proper position.

**Note:** Using the lower hole tightens the bag assembly and using the upper hole loosens the assembly.

**Note:** Under normal use, the bag materials are subject to deterioration and wear. Check the grass bag often and replace it when necessary with a genuine Toro replacement bag. A weakened or inferior bag may let objects pass through, causing injury.

**Danger**

**The lawn mower can throw grass clippings and other objects through an open discharge tunnel. Objects thrown with enough force could cause serious personal injury or death to the operator or bystander.**

**Never open the door on the discharge tunnel when the engine is running.**

**Warning**

**A worn grass bag could allow small stones and other similar debris to be thrown in the operator's or bystander's direction and result in serious personal injury or death to the operator or bystanders.**

**Check the grass bag frequently. If it is damaged, install a new Toro replacement bag.**

# Operating Tips

- Review the safety instructions and read this manual carefully before operating the lawn mower.
- Clear the area of sticks, stones, wire, branches, and other debris that the blade could hit and throw.
- Keep everyone, especially children and pets, away from the area of operation.
- Avoid striking trees, walls, curbs, or other solid objects. Never deliberately mow over any object.
- If the lawn mower strikes an object or starts to vibrate, immediately stop the engine, disconnect the wire from the spark plug, and examine the lawn mower for damage.
- Maintain a *sharp blade* throughout the cutting season. Periodically file down nicks on the blade.
- Replace the blade when necessary with an original Toro replacement blade.
- Mow only dry grass or leaves. Wet grass and leaves tend to clump on the yard and can cause the lawn mower to plug or the engine to stall.

**Warning**

**Wet grass or leaves can cause serious injury if you slip and contact the blade.**

**Mow only in dry conditions.**

- Clean the underside of the lawn mower deck after each mowing. See Cleaning the Underside of the Lawn Mower Housing on page 15.
- Keep the engine in good running condition.
- Set the engine speed to the fastest position for the best cutting results.

**Warning**

**Operating a lawn mower with its engine running at a speed greater than the factory setting can cause the lawn mower to throw a part of the blade or engine into the operator's or bystander's area and result in serious personal injury or death.**

- **Do not change the engine speed setting.**
- **If you suspect the engine speed is faster than normal, contact an Authorized Service Dealer.**

- Clean the air filter frequently. Mulching stirs up more clippings and dust which clogs the air filter and reduces engine performance.

## Cutting Grass

- Grass grows at different rates at different times of the year. In the summer heat, it is best to cut grass at the 2 inch (51 mm), 2-1/2 inch (64 mm), or 3 inch (76 mm) cutting height settings. Cut only about a third of the grass blade at a time. Do not cut below the 2-inch (51 mm) setting unless the grass is sparse or it is late fall when grass growth begins to slow down.
- When cutting grass over six inches (15 cm) tall, first mow at the highest cutting height setting and walk slower; then mow again at a lower setting for the best lawn appearance. If the grass is too long and the leaves clump on top of the lawn, the lawn mower may plug and cause the engine to stall.
- Alternate the mowing direction. This helps disperse the clippings over the lawn for even fertilization.

If the finished lawn appearance is unsatisfactory, try one or more of the following:

- Sharpen the blade.
- Walk at a slower pace while mowing.
- Raise the cutting height on your lawn mower.
- Cut the grass more frequently.
- Overlap cutting swaths instead of cutting a full swath with each pass.
- Set the cutting height on the front wheels one notch lower than the rear wheels. For example, set the front wheels at 2 inches (51 mm) and the rear wheels at 2-1/2 inches (64 mm).

## Cutting Leaves

- After cutting the lawn, ensure that half of the lawn shows through the cut leaf cover. You may need to make more than one pass over the leaves.

- For light leaf coverage, set all the wheels at the same cutting height setting.
- If there are more than five inches (12.7 cm) of leaves on the lawn, set the front cutting height one or two notches higher than the rear cutting height. This makes it easier to feed the leaves under the lawn mower deck.
- Slow down your mowing speed if the lawn mower does not cut the leaves finely enough.
- If you mow over oak leaves, you can add lime to the grass in the spring to reduce the acidity of the oak leaves.

# Maintenance

**Note:** Determine the left and right sides of the machine from the normal operating position.

## Recommended Maintenance Schedule

| Maintenance Service Interval | Maintenance Procedure |
|---|---|
| Each Use | • Check the engine oil level.<br>• Remove grass clippings and dirt from under the housing. |
| 5 Hours | • Check the blade and the engine mounting fasteners. Tighten them if they are loose. |
| 25 Hours | • Clean the air filter pre-cleaner (for models 20025, 20027, and 20035), and replace the paper air filter; replace the paper air filter more frequently in dusty or dirty operating conditions. |
| 50 Hours | • Change the engine oil.[1,2]<br>• Sharpen or replace the blade; maintain it more frequently if the edge dulls quickly in rough or in sandy conditions.<br>• Check the stopping time of the blade brake. The blade must stop within three seconds of releasing the bail; if it does not, contact an Authorized Service Dealer for repair.<br>• Adjust the self-propel drive cable and grease the rear-height adjustor brackets.<br>• Check for leaks in the fuel system and/or a deteriorating fuel hose. Replace parts if necessary.<br>• Remove grass clippings and debris from under the belt cover. |
| 100 Hours | • Inspect the spark plug and replace it if necessary.<br>• Clean the cooling system; remove grass clippings, debris, or dirt from the engine air cooling fins and starter. clean the system more frequently in dirty or high-chaff conditions. |
| Storage | • Empty the fuel tank before repairs as directed or before storage.<br>• Charge the battery monthly and before storage (electric start model only). |

**Important** Refer to your engine operator's manual for additional maintenance procedures.

[1]Change the engine oil after the first five operating hours.

[2]Change the engine oil after every 25 operating hours in dusty conditions or in high temperatures.

# Checking the Engine Oil Level

Before you use the lawn mower, make sure that the oil level between the *Add* and the *Full* marks as shown on the dipstick (Fig. 8). If the oil level is below the *Add* mark, add oil. Refer to Filling the Crankcase with Oil on page 7.

# Cleaning the Underside of the Lawn Mower Housing

To ensure best performance, keep the underside of the lawn mower housing clean. Be especially careful to keep the kickers free of debris (Fig. 20).

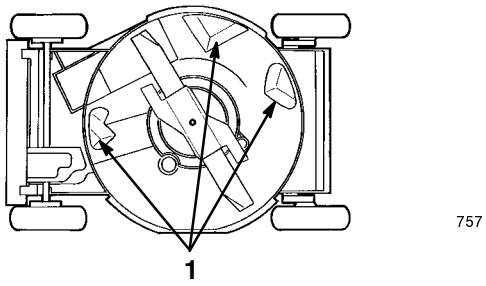


**Figure 20**

1. Kickers

## Washing Method

1. Position the lawn mower on a flat, concrete or asphalt surface near a garden hose.
2. Start the engine.
3. Hold the running garden hose at handle level and direct the water to flow on the ground just in front of the right rear tire (Fig. 21).

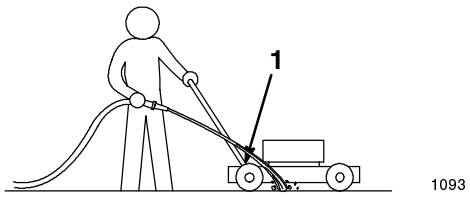


**Figure 21**

1. Rear right wheel

**Note:** The blade will draw in water and wash out clippings. Let the water run until you no longer see clippings being washed out from under the housing.

4. Stop the engine and wait for all moving parts to stop.
5. Turn off the water.
6. Start the lawn mower and let it run for a few minutes to dry out the moisture on the lawn mower and its components.
7. While the engine is running, engage and disengage the traction drive several times to dry it out.

## Scraping Method

If washing does not remove all the debris from under the lawn mower, tip it and scrape it clean.

1. Disconnect the wire from the spark plug (Fig. 11).
2. Drain the gasoline from the fuel tank; refer to steps 3 and 4 of Emptying the Fuel Tank on page 22.

**Warning**

**Tipping the lawn mower may cause the fuel to leak from the carburetor or the fuel tank. Gasoline is extremely flammable, highly explosive and under certain conditions can cause personal injury or property damage.**

**Avoid fuel spills by running the engine dry or removing gasoline with a hand pump; never siphon.**

3. Tip the lawn mower onto its left side (air filter up) (Fig. 20).
4. Remove dirt and grass clippings with a hardwood scraper. Avoid burrs and sharp edges.

**Important** Move the blade as little as possible to avoid starting problems.

5. Turn the lawn mower upright.
6. Fill the fuel tank.
7. Connect the wire to the spark plug.

# Servicing the Air Filter

Replace the air filter once every season or every 25 operating hours; replace it more frequently in dusty operating conditions.

**Important** Do not operate the engine without the air filter element; extreme engine damage will occur.

## Models 20022 and 20023

1. Stop the engine and wait for all moving parts to stop.
2. Disconnect the wire from the spark plug (Fig. 11).
3. Loosen the screw that secures the air filter cover to the engine (Fig. 22).

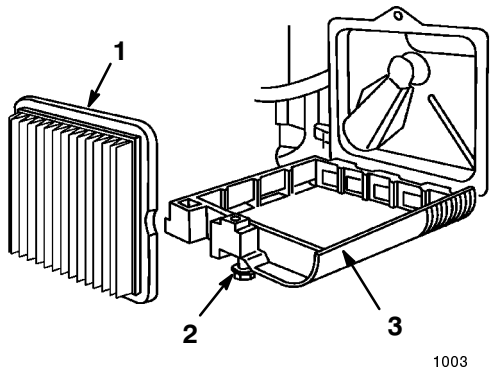


**Figure 22**

1. Air filter
2. Screw
3. Cover

4. Tilt the air cleaner cover down and clean the cover thoroughly (Fig. 22).
5. Remove and discard the paper air cleaner filter (Fig. 22).

**Important** Do not try to clean a paper filter.

6. Insert a new paper air cleaner filter.
7. Install the air cleaner cover and secure it with a screw.

**Important** Do not operate the engine without the air filter element; extreme engine wear and damage can occur.

## Models 20025 and 20035

1. Stop the engine and wait for all moving parts to stop.
2. Disconnect the wire from the spark plug (Fig. 11).
3. Loosen the screw that secures the air filter cover to the engine (Fig. 22).

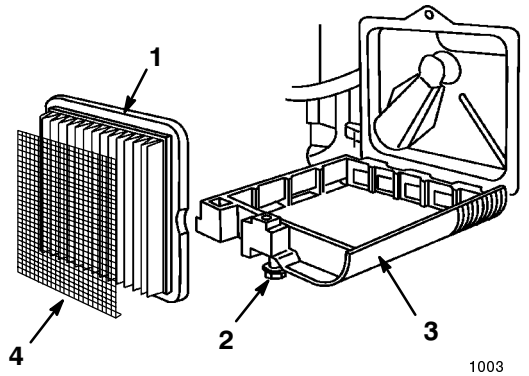


**Figure 23**

1. Air filter
2. Screw
3. Cover
4. Pre-cleaner

4. Tilt the air cleaner cover down and clean the cover thoroughly (Fig. 22).
5. Remove the pre-cleaner, wash it in liquid detergent and water, and let it thoroughly dry.

**Note:** Do not oil the pre-cleaner; replace it if it is very dirty or is damaged.

6. Remove and discard the paper air cleaner filter (Fig. 22).

**Important** Do not try to clean a paper filter.

7. Insert a new paper air cleaner filter.
8. Insert the pre-cleaner over the pleats in the air filter (the pre-cleaner lip should be at the bottom of the pleats).
9. Install the air cleaner cover and secure it with a screw.

**Important** Do not operate the engine without the air filter element; extreme engine wear and damage can occur.

## Model 20027

1. Stop the engine and wait for all moving parts to stop.
2. Disconnect the wire from the spark plug (Fig. 11).
3. Remove the screws that secure the air cleaner cover (Fig. 24).

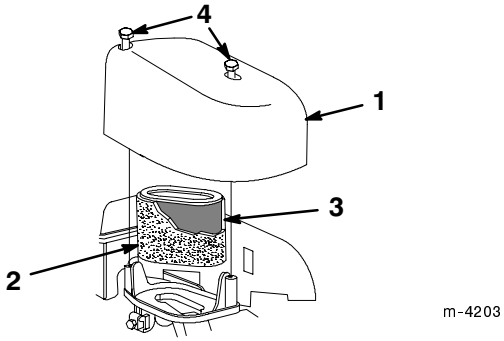


**Figure 24**

1. Cover
2. Foam pre-cleaner
3. Air filter
4. Screws

4. Remove the cover and clean it thoroughly (Fig. 24).
5. Remove the foam.
6. Wash the pre-cleaner with a mild detergent and water, then blot it dry (Fig. 24).
7. Remove the paper air filter and discard it (Fig. 24).

**Important** Do not try to clean a paper filter.

8. Install the foam pre-cleaner on the new paper air filter (Fig. 24).

9. Install the new air cleaner filter (Fig. 24).

10. Install the cover and secure it (Fig. 24).

# Changing the Engine Oil

Change the oil after the first five operating hours and then after every 50 operating hours or every season. Run the engine just before changing the oil to warm the oil. Warm oil flows better and carries more contaminants.

**Note:** Change the oil after every 25 operating hours when operating under heavy load or in high temperatures.

**Warning**

**Tipping the lawn mower may cause the fuel to leak from the carburetor or the fuel tank. Gasoline is extremely flammable, highly explosive and under certain conditions can cause personal injury or property damage.**

**Avoid fuel spills by running the engine dry or removing gasoline with a hand pump; never siphon.**

## Draining the Oil above the Lawn Mower Deck (Preferred Method)

1. Drain the gasoline from the fuel tank; refer to steps 3 and 4 of Emptying the Fuel Tank on page 22.
2. Start the engine and let it run until it runs out of fuel.
3. Disconnect the wire from the spark plug (Fig. 11).
4. Remove the dipstick.
5. Tip the lawn mower onto its left side (air filter up), allowing the oil to drain into an appropriate container (Fig. 25).

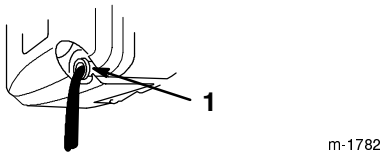


**Figure 25**

1. Oil fill tube

6. Recycle the used oil according to local codes.
7. Turn the lawn mower upright.
8. Fill the crankcase with fresh oil to the *Full* mark on the dipstick. Refer to Filling the Crankcase with Oil on page 7.
9. Install the dipstick.
10. Wipe up any spilled oil.
11. Connect the wire onto the spark plug.

## Draining the Oil below the Lawn Mower Deck (Optional Method)

**Note:** You may need to remove the belt guide to access the oil drain plug.

**Note:** You need a 3/8-in. ratchet extension to perform this procedure.

**Warning**

**The blade is sharp; contacting the blade can result in serious personal injury.**

**Wear gloves or wrap the sharp edges of the blade with a rag.**

1. Disconnect the wire from the spark plug (Fig. 11).
2. Drain the gasoline from the fuel tank; refer to steps 3 and 4 of Emptying the Fuel Tank on page 22.
3. Tip the lawn mower onto its **left** side (air filter up)and secure it to prevent it from falling.
4. Place a drain pan under the lawn mower.
5. Remove the oil drain plug, return the lawn mower to its operating position, and allow the oil to drain into the drain pan (Fig. 26).

**Important** You may need to move the blade to get to the oil drain plug. Move the blade as little as possible to avoid future starting problems.

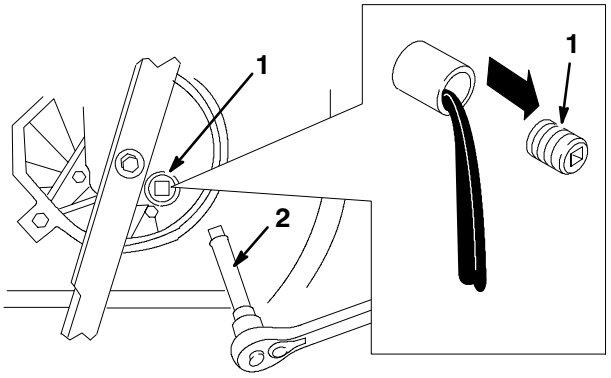


**Figure 26**

1. Oil drain plug
2. 3/8-in. Ratchet extension

6. Tip the lawn mower onto its **left** side (air filter up) and install the oil drain plug.

7. Fill the crankcase with fresh oil to the *Full* mark on the dipstick. Refer to Filling the Crankcase with Oil on page 7.
8. Wipe up any spilled oil.
9. Connect the wire onto the spark plug.
10. Recycle the used oil according to local codes.

# Maintaining the Cutting Blade

A straight, sharp blade provides the best cutting performance. Regularly inspect and sharpen the blade.

**Warning**

**The blade is sharp; contacting the blade can result in serious personal injury.**

**Wear gloves or wrap the sharp edges of the blade with a rag.**

1. Stop the engine and wait for all moving parts to stop.
2. Disconnect the wire from the spark plug (Fig. 11).

**Warning**

**Tipping the lawn mower may cause the fuel to leak from the carburetor or the fuel tank. Gasoline is extremely flammable, highly explosive and under certain conditions can cause personal injury or property damage.**

**Avoid fuel spills by running the engine dry or removing gasoline with a hand pump; never siphon.**

3. Drain the gasoline from the fuel tank; refer to steps 3 and 4 of Emptying the Fuel Tank on page 22.
4. Tip the lawn mower on its left side (air filter up) (Fig. 27).

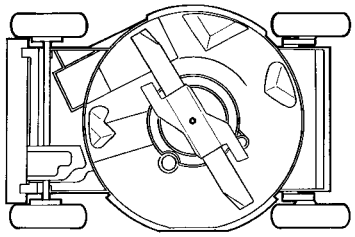


**Figure 27**

**Important** Move the blade as little as possible to avoid future staring problems.

## Inspecting the Blade

Carefully examine the blade for sharpness and wear, especially where the flat and the curved parts meet (Fig. 28A). Because sand and abrasive material can wear away the metal that connects the flat and curved parts of the blade, check the blade before using the lawn mower. If you notice a slot or wear (Figs. 28B and 28C), replace the blade; refer to Removing the Blade on page 19.

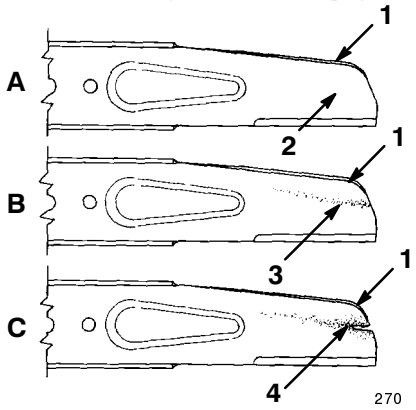


**Figure 28**

1. Sail
2. Flat part of blade
3. Wear
4. Slot formed

**Note:** For the best performance, install a new blade before the cutting season begins. During the year, file down any small nicks to maintain the cutting edge.

**Danger**

**A worn or damaged blade can break, and a piece of the blade could be thrown into the operator's or bystander's area, resulting in serious personal injury or death.**

- **Inspect the blade periodically for wear or damage.**
- **Replace a worn or damaged blade.**

## Removing the Blade

1. Grasp the end of the blade using a rag or a thickly padded glove.
2. Remove the blade bolt, the lock washer, the blade accelerator, and the blade (Fig. 29).

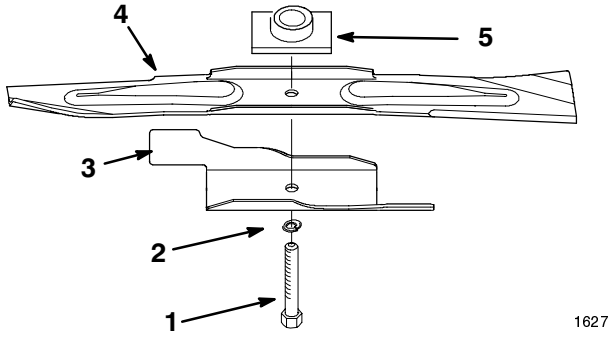


**Figure 29**

1. Blade bolt
2. Lock washer
3. Accelerator
4. Blade
5. Blade driver

## Sharpening the Blade

File the top side of the blade to maintain its original cutting angle (Fig. 30A) and inner cutting edge radius (Fig. 30B). The blade will remain balanced if you remove the same amount of material from both cutting edges.

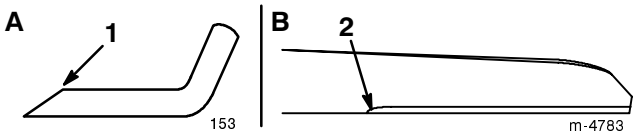


**Figure 30**

1. Sharpen at this angle only
2. Maintain the original radius here

## Balancing the Blade

1. Check the balance of the blade by placing the center hole of the blade over a nail or screwdriver shank clamped horizontally in a vise (Fig. 31).

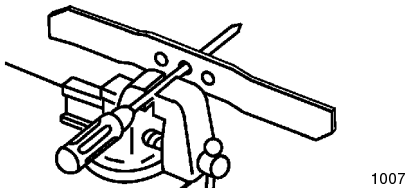


**Figure 31**

**Note:** You can also check the balance using a commercially manufactured, blade balancer.

2. If either end of the blade rotates downward, file that end (not the cutting edge or the end near the cutting edge). The blade is properly balanced when neither end drops.

## Installing the Blade

1. Position the blade onto the spindle and the blade driver, with the curved blade tips pointing toward the lawn mower and the blade driver nesting in the recess of the blade (Fig. 29).
2. Install the accelerator, the lock washer, and the blade bolt (Fig. 29).
3. Tighten the blade bolt to 50 ft-lb (68 N·m).

**Warning**

**Operating the lawn mower without the accelerator in place can cause the blade to flex, bend, or break, resulting in serious injury or death to the operator or bystanders.**

**Do not operate the lawn mower without the accelerator.**

# Adjusting the Self-propel Drive Cable

Whenever you change the handle height, install a new self-propel cable, or the traction drive belt slips, adjust the self-propel drive cable.

1. With the engine turned off, remove the bolt that secures the belt cover (Fig. 32) and remove the cover.

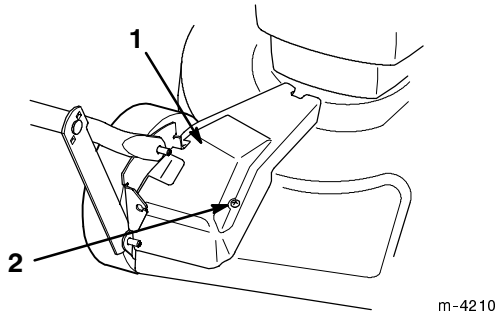


**Figure 32**

1. Belt cover
2. Bolt

**2.** Loosen the cable support nut (Fig. 33).

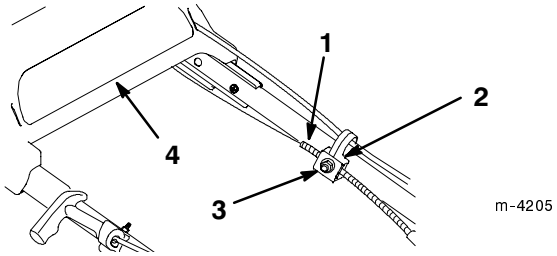


**Figure 33**

1. Cable jacket
2. Cable support
3. Nut
4. Upper handle

**3.** Push the drive bracket down until it contacts the lawn mower, then hold it in place (Fig. 34).

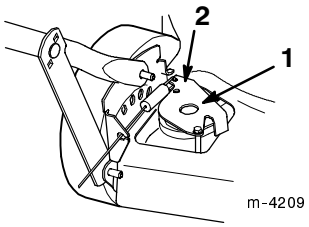


**Figure 34**

1. Drive bracket
2. Push here

**4.** With the upper handle pushed back as far as possible and while holding the drive bracket down, pull the cable jacket down (toward the lawn mower) until there is no slack in the cable (Fig. 33).

**5.** Tighten the nut on the cable support (Fig. 33).

**6.** Release the drive bracket.

**7.** Install the belt cover.

# Lubricating the Self-propel Drive

**1.** Wipe the grease fittings on the rear wheel height adjustment levers (Fig. 35) with a clean rag.

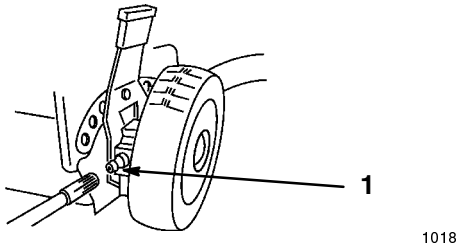


**Figure 35**

1. Grease fitting

**2.** Install a grease gun onto each fitting in turn and gently apply one or two pumps of #2 multi-purpose lithium grease to each.

**Important** Excess grease may damage the seals and prevent the wheel clutch from properly operating.

# Cleaning Under the Belt Cover

Keep the area under the belt cover free of debris.

**1.** With the engine off, remove the bolt that secures the belt cover (Fig. 36) to the lawn mower housing.

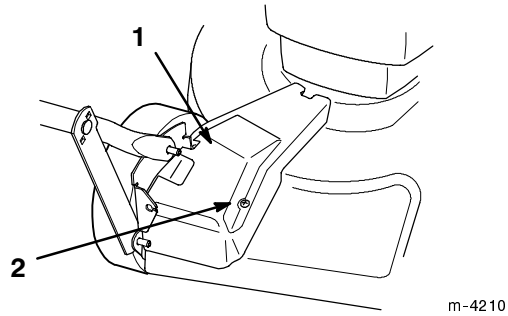


**Figure 36**

1. Belt cover
2. Bolt

**2.** Lift off the cover and brush out all debris from the belt area.

**3.** Install the belt cover.

# Maintaining the Spark Plug

## All Models Except 20027

Use a *Champion RJ19LM* spark plug or equivalent. Set the gap to 0.030 inch (0.76 mm). Remove the spark plug and check its condition after every 25 operating hours.

1. Stop the engine and wait for all moving parts to stop.
2. Disconnect the wire from the spark plug (Fig. 37).

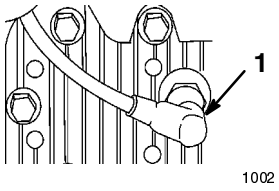


**Figure 37**

1. Spark-plug wire

3. Clean around the spark plug and remove it from the cylinder head.

**Important** Replace a cracked, fouled, or dirty spark plug. Do not clean the electrodes because engine damage could result from grit entering the cylinder.

4. Set the gap on the new plug as shown in Figure 38.

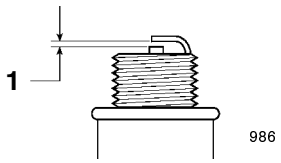


**Figure 38**

1. 0.030 inch (0.76 mm)

5. Install the spark plug and gasket seal. Torque the spark plug to 15 ft-lb (20 N·m).
6. Connect the wire to the spark plug.

### Model 20027

Use a *Champion RC12YC* spark plug or equivalent. Set the gap to 0.020 inch (0.50 mm). Remove the spark plug and check its condition after every 25 operating hours.

1. Stop the engine and wait for all moving parts to stop.
2. Disconnect the wire from the spark plug (Fig. 39).

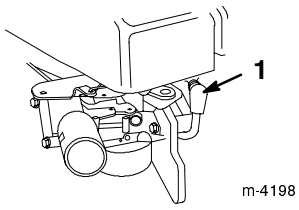


**Figure 39**

1. Spark-plug wire

3. Clean around the spark plug and remove it from the cylinder head.

**Important** Replace a cracked, fouled, or dirty spark plug. Do not clean the electrodes because engine damage could result from grit entering the cylinder.

4. Set the gap on the new plug as shown in Figure 40.

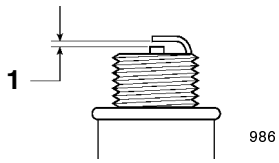


**Figure 40**

1. 0.020 (0.50 mm)

5. Install the spark plug and gasket seal. Torque the spark plug to 15 ft-lb (20 N·m).
6. Connect the wire to the spark plug.

## Changing the Fuse

**Electric Start Model only**

Refer to Installing the Fuse on page 7.

## Charging the Battery

**Electric Start Model only**

**Warning**

**Battery posts, terminals, and related accessories contain lead and lead compounds, chemicals known to the State of California to cause cancer and reproductive harm.** ***Wash hands after handling.***

Charge a new or stored battery for 24 continuous hours to ensure a full charge. Charge the battery for 24 hours every month (every 25 starts) or as needed.

1. Stop the engine and wait for all moving parts to stop.
2. Disconnect the wire from the spark plug (Fig. 37).
3. Remove the key from the switch.
4. Connect the lead of the battery charger (supplied with your lawn mower) to the wire harness lead.

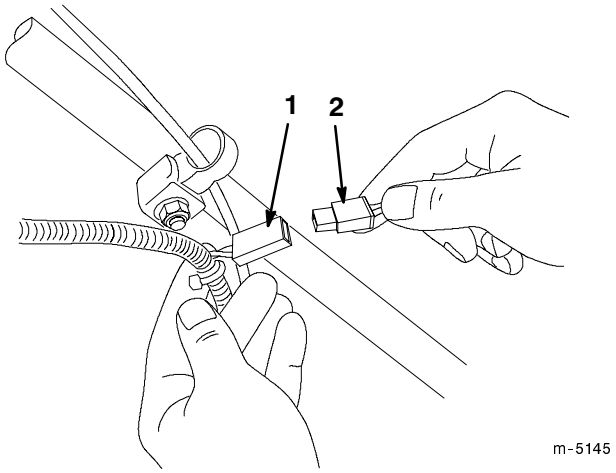


**Figure 41**

1. Wire harness lead
2. Battery charger lead

5. Plug the charger into a 120V AC power outlet.
6. Charge the battery for the specified time.
7. Unplug the battery charger.

   **Important** Use only the Toro charger; other chargers could damage the battery. Always use the charger indoors and charge the battery at room temperature (70°F or 22°C) whenever possible.
8. Connect the wire to the spark plug.

## Disposing of the Battery

**Important** Do not dispose of used batteries in your regular trash.

**Important** Recycle or dispose of a sealed lead (acid) battery according to local codes.

Incinerating, landfilling, or mixing of sealed lead (acid) batteries with the municipal solid waste stream is **prohibited by law** in most areas.

Return this battery to a federal- or state-approved sealed lead (acid) battery recycler.

Contact your local waste management officials for more information regarding the environmentally sound collection, recycling, and disposal of the battery.

## Emptying the Fuel Tank

1. Stop the engine and wait for it to cool.

**Important** Drain gasoline from a cold engine only.

2. Disconnect the wire from the spark plug (Fig. 11).
3. Remove the cap from the fuel tank (Fig. 9).
4. Use a pump-type syphon to drain the gasoline into a clean approved gasoline container.
5. Connect the wire onto the spark plug.
6. Run the engine until it stops.
7. Start the engine again to make sure that all the gasoline is out of the carburetor.

# Storage

To prepare the lawn mower for off-season storage, perform the recommended maintenance procedures. Refer to Maintenance on page 14.

Store the lawn mower in a cool, clean, dry place. Cover the lawn mower to keep it clean and protected.

## Preparing the Fuel System

**Warning**

**Gasoline can vaporize if you store it over long periods of time and explode if it comes into contact with an open flame.**

- **Do not store gasoline over long periods of time.**
- **Do not store the lawn mower with gasoline in the fuel tank or the carburetor in an enclosure with an open flame. (For example, a furnace or a water heater pilot light.)**
- **Allow the engine to cool before storing it in any enclosure.**

Empty the fuel tank when mowing the last time before storing the lawn mower.

1. Run the lawn mower until the engine stops from running out of fuel.
2. Prime the engine and start it again.
3. Allow the engine to run until it stops. When you can no longer start the engine, it is sufficiently dry.

## Preparing the Engine

1. While the engine is still warm, change the oil in the crankcase. Refer to Changing the Engine Oil on page 17.
2. Remove the spark plug (Fig. 11).
3. Using an oil can, add about one tablespoon of oil through the spark plug hole.
4. Slowly rotate the engine several times using the starter rope to distribute the oil.
5. Install the spark plug but **do not** connect the wire to the spark plug.

## General Information

1. Clean the lawn mower housing. Refer to Cleaning the Underside of the Lawn Mower Housing on page 15.
2. Clean any dirt and chaff from the cylinder, cylinder head fins, and blower housing.
3. Remove grass clippings, dirt, and grime from the external parts of the engine, the shrouding, and the top of the lawn mower housing.
4. Check the condition of the blade. Refer to Maintaining the Cutting Blade on page 18.
5. Tighten all nuts, bolts, and screws.
6. Lubricate the self-propel drive. Refer to Lubricating the Self-Propel Drive on page 20.
7. Touch up all rusted or chipped paint surfaces with paint available from an Authorized Service Dealer.
8. Prepare the battery for storage. Charge the battery for 72 hours to ensure a full charge (refer to Charging the Battery on page 21), then unplug the battery charger and store the lawn mower in an unheated area. If you must store the lawn mower in a heated area, you must charge the battery every 90 days.

## Folding the Handle

**Warning**

**Folding or unfolding the handle improperly can pinch, stretch, or damage one or more of the cables. Any pinched, stretched, or damaged cable may cause an operational failure that results in an unsafe operating condition.**

- **Do not pinch, stretch, or damage the cables.**
- **Handle the cables with care when folding or unfolding the handle.**
- **Do not use the lawn mower if one or more of the cables are pinched, stretched, or damaged. Contact your Authorized Service Dealer.**

**Important** Do not remove or loosen the knobs that secure the lower handle to the swing bracket. Do not fold the upper handle backward.

1. Loosen the knobs that secure the upper handle section.
2. Carefully swing the upper handle forward until it rests on the engine (Fig. 42).

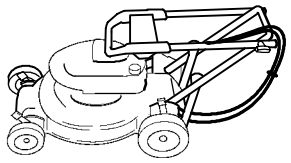


**Figure 42**

## Removing From Storage

**Warning**

**Folding or unfolding the handle improperly can pinch, stretch, or damage one or more of the cables. Any pinched, stretched, or damaged cable may cause an operational failure that results in an unsafe operating condition.**

- **Do not pinch, stretch, or damage the cables.**
- **Handle the cables with care when folding or unfolding the handle.**
- **Do not use the lawn mower if one or more of the cables are pinched, stretched, or damaged. Contact your Authorized Service Dealer.**

1. Carefully unfold the upper handle until it nests with the lower handle, then tighten the knobs.

2. Check and tighten all fasteners.
3. Remove the spark plug (Fig. 11) and spin the engine rapidly using the starter to blow the excess oil from the cylinder.
4. Clean the spark plug or replace it if it is cracked, broken, or if the electrodes are worn.
5. Install the spark plug and torque it to 15 ft-lb (20 N·m).
6. Perform the recommended maintenance procedures; refer to Maintenance on page 14.
7. Fill the fuel tank (Fig. 43) with fresh, clean gasoline.

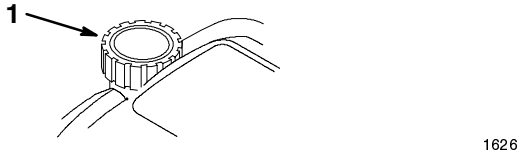


**Figure 43**

1. Fuel tank cap

8. Check the engine oil level. Refer to Checking the Engine Oil Level on page 15.
9. Connect the wire to the spark plug.
10. Charge the battery. Refer to Charging the Battery on page 21.

# Accessories

Your lawn mower may include accessories available from your Authorized Service Dealer. For proper installation of these accessories, follow these instructions.

## Rear Grass Catcher

### Installing the Discharge Tunnel

1. Stop the engine and wait for all moving parts to stop.
2. Disconnect the wire from the spark plug (Fig. 11).
3. Remove the knob and side cover clamp (Fig. 44).

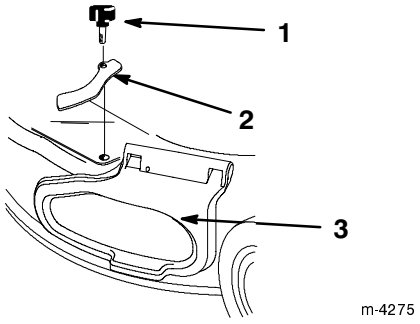


**Figure 44**

1. Knob
2. Side cover clamp
3. Side opening cover

4. Remove and save the three bolts that secure the discharge cover to the lawn mower (Fig. 45). Save the cover and bolts for future use.

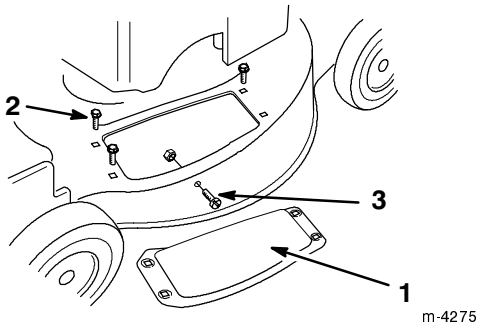


**Figure 45**

1. Discharge cover
2. Bolt (3)
3. Screw and nut

5. Remove the screw and nut from side of the lawn mower (Fig. 45). Save them for future use.
6. Install four grommets supplied with the grass catcher into the four square holes in the lawn mower (Fig. 46).

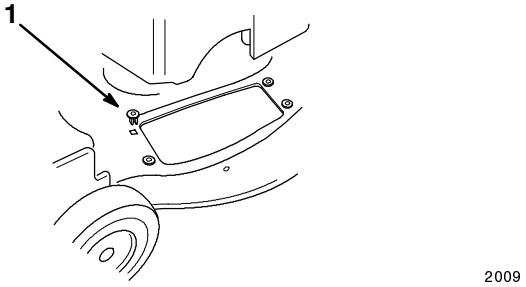


**Figure 46**

1. Grommet (4)

7. Insert the tongue of the discharge tunnel into the lawn mower (Fig. 47).
8. Align the holes in the tunnel with the grommets in the lawn mower (Fig. 47).
9. Ensure that the hole in the tongue aligns with the hole in the side of the lawn mower (Fig. 47).

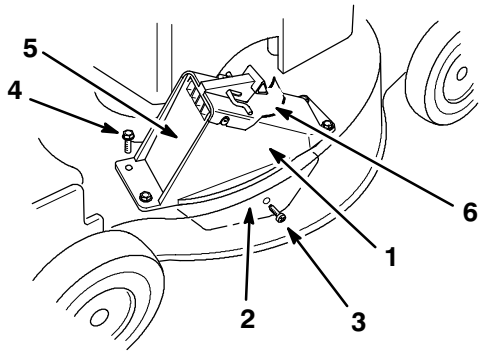


**Figure 47**

1. Discharge tunnel
2. Tongue
3. Self-tapping screw
4. Bolt (3)
5. Discharge tunnel door
6. Brush guard

10. Install the self-tapping plastite screw supplied with the grass catcher into the side hole and tongue, and partially tighten the screw (Fig. 47).
11. Using three screws supplied with the grass catcher, fasten the discharge tunnel to the lawn mower (Fig. 47).
12. Secure the front right corner of the discharge tunnel and the side opening cover with the side cover clamp removed previously and the long knob supplied with the grass catcher (Fig. 48).

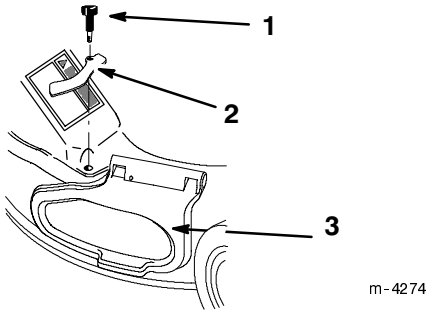


**Figure 48**

1. Long knob
2. Side cover clamp
3. Side opening cover

**Danger**

**If the side opening cover is not securely clamped in place, the lawn mower can throw debris out of the side opening, resulting in serious personal injury or death to the operator or bystanders.**

**Always make sure that either the side opening cover is closed and locked in place by the side cover clamp or that the side discharge chute is securely seated in place before starting the lawn mower.**

13. Tighten all four screws and the long knob.
14. Open and close the tunnel door to ensure that it moves freely (Fig. 47).
15. Connect the wire to the spark plug.

## Installing the Bag Hanger

1. Remove the knob and bolt that secure the left side of the upper and lower handle sections (Fig. 49).

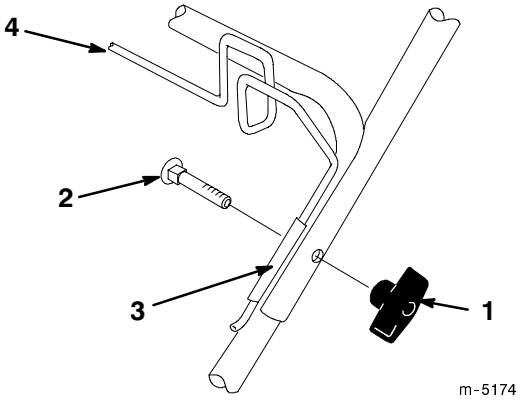


**Figure 49**

1. Knob
2. Bolt
3. Hanger clamp
4. Bag hanger

2. Hold a hanger clamp on the inside of one of the handle sides, and insert a bolt from the inside of the handle sections through the holes in the hanger clamp (Fig. 49).
3. Position the bag hanger leg into the hanger clamp groove and secure it with a knob.
4. Repeat steps 1 through 3 for the other side.

## Installing the Grass Bag

Refer to Installing the Grass Bag on page 10.

# Side Discharge Chute

## Installing the Side Discharge Chute

1. Stop the engine and wait for all moving parts to stop.
2. Disconnect the wire from the spark plug (Fig. 11).
3. Remove the knob and side cover clamp, then replace the knob in the hole and save the clamp for future use (Fig. 44).
4. Lift up on the side opening cover (Fig. 44).
5. Slide the chute over the opening with the slots in the chute lined up with the tabs under the cover (Fig. 50).

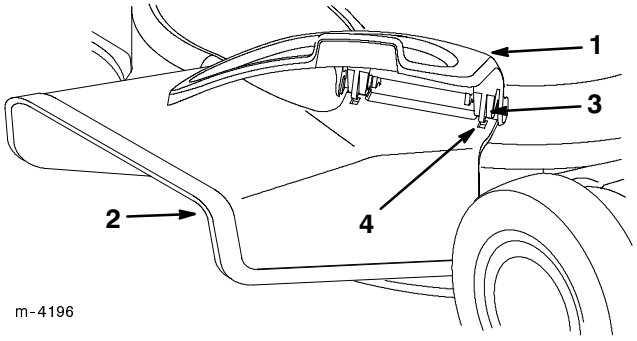


**Figure 50**

| | | | |
|---|---|---|---|
| 1. | Side opening cover | 3. | Tab |
| 2. | Side discharge chute | 4. | Slot |

6. Close the cover.
7. Connect the wire to the spark plug.

## Removing the Side Discharge Chute

1. Stop the engine and wait for all moving parts to stop.
2. Disconnect the wire from the spark plug (Fig. 11).
3. Open the side opening cover and remove the side discharge chute (Fig. 50).
4. Close the cover.
5. Remove the knob.
6. Install the side cover clamp and the knob to secure the side opening cover (Figs. 45 and 51).

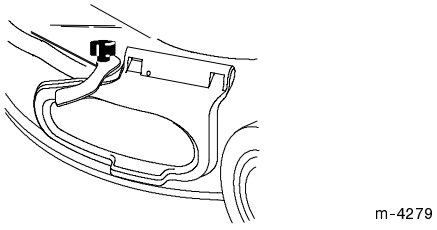


**Figure 51**

**Danger**

**If the side opening cover is not securely clamped in place, the lawn mower can throw debris out of the side opening, resulting in serious personal injury or death to the operator or bystanders.**

**Always make sure that either the side opening cover is closed and locked in place by the side cover clamp or that the side discharge chute is securely seated in place before starting the lawn mower.**

7. Connect the wire to the spark plug.

# Discharge Tunnel Plug

1. Stop the engine and wait for all moving parts to stop.
2. Disconnect the wire from the spark plug (Fig. 11)
3. Open the discharge door by moving handle rearward (Fig. 52) and hold it open while inserting the plug.

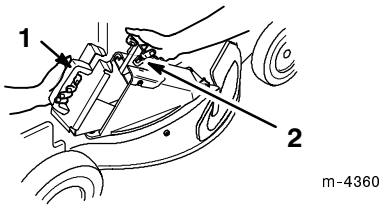


**Figure 52**

1. Plug
2. Discharge door handle

4. Insert the plug into the discharge tunnel opening and fit the lower section into the opening first (Fig. 53).

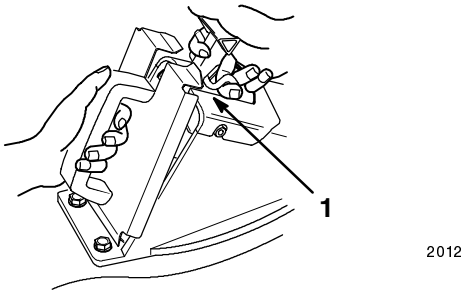


**Figure 53**

1. Door latch

5. Lift the door latch on the door handle (Fig. 53), and push the top of the plug all the way in while moving the door handle rearward.
6. Release the door latch, allowing it to hook over the tabs on the plug (Fig. 54).

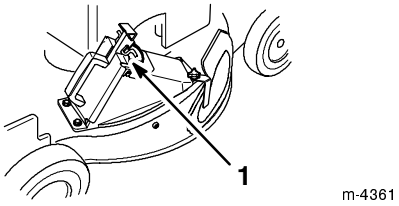


**Figure 54**

1. Tab (2)

7. To remove the plug, pull up on the door latch and hold discharge door fully open. When the plug is unlocked, pull it out of the discharge tunnel.
8. Connect the wire to the spark plug.

# Troubleshooting

Toro designed and built your lawn mower for trouble-free operation. Check the following components and items carefully, and refer to Maintenance on page 14 for more information. If a problem continues, contact an Authorized Service Dealer.

| Problem | Possible Causes | Corrective Action |
|---|---|---|
| Engine does not start | 1. The fuel tank is empty or the fuel system contains stale fuel. | 1. Drain and/or fill the fuel tank with fresh gasoline. If the problem persists, contact an Authorized Service Dealer. |
| | 2. The primer has not been pushed in. | 2. Push the primer in three times. |
| | 3. The wire is not connected to the spark plug. | 3. Connect the wire to the spark plug. |
| | 4. The spark plug is pitted, fouled, or the gap is incorrect. | 4. Check the spark plug and adjust the gap if necessary. Replace the spark plug if it is pitted, fouled, or cracked. |
| | 5. The fuse is blown (Electric start model only). | 5. Replace the fuse. |
| | 6. The battery charge is too low (Electric start model only). | 6. Start the engine manually, or charge the battery and start the engine with the electric starter later. |
| Engine starts hard or loses power | 1. The fuel tank contains stale fuel. | 1. Drain and fill the fuel tank with fresh gasoline. |
| | 2. The fuel cap vent hole is plugged. | 2. Clean the fuel cap vent hole or replace the fuel cap. |
| | 3. The air filter element is dirty and is restricting the air flow. | 3. Clean the air filter pre-cleaner and/or replace the paper air filter. |
| | 4. The underside of the lawn mower deck contains clippings and debris. | 4. Clean the underside of the lawn mower deck. |
| | 5. The spark plug is pitted, fouled, or the gap is incorrect. | 5. Check the spark plug and adjust the gap if necessary. Replace the spark plug if it is pitted, fouled, or cracked. |
| | 6. The engine oil level is low or the oil is dirty. | 6. Check the engine oil. Change the oil if it is dirty or add oil if it is low. |
| Engine runs rough | 1. The wire is not connected to the spark plug. | 1. Connect the wire to the spark plug. |
| | 2. The spark plug is pitted, fouled, or the gap is incorrect. | 2. Check the spark plug and adjust the gap if necessary. Replace the spark plug if it is pitted, fouled, or cracked. |
| | 3. The air filter element is dirty and is restricting the air flow. | 3. Clean the air filter pre-cleaner and/or replace the paper air filter. |

| Problem | Possible Causes | Corrective Action |
|---|---|---|
| Lawn mower or engine vibrates excessively | 1. The blade is bent or is out of balance.<br>2. The blade bolt is loose.<br>3. The underside of the lawn mower deck contains clippings and debris.<br>4. The engine mounting bolts are loose. | 1. Balance the blade. If the blade is bent, replace it.<br>2. Tighten the blade bolt.<br>3. Clean the underside of the lawn mower deck.<br>4. Tighten the engine mounting bolts. |
| Uneven cutting pattern | 1. All four wheels are not at the same height.<br>2. The blade is dull.<br>3. You are mowing in the same pattern repeatedly.<br>4. The underside of the lawn mower deck contains clippings and debris. | 1. Place all four wheels at the same height.<br>2. Sharpen and balance the blade.<br>3. Change the mowing pattern.<br>4. Clean the underside of the lawn mower deck. |
| Discharge chute plugs | 1. The cutting height is too low.<br>2. You are mowing too fast.<br>3. The grass is wet.<br>4. The underside of the lawn mower deck contains clippings and debris. | 1. Raise the cutting height.<br>2. Slow down.<br>3. Allow the grass to dry before mowing.<br>4. Clean the underside of the lawn mower deck. |
| Lawn mower does not self-propel | 1. The self-propel drive cable is out of adjustment or is damaged.<br>2. There is debris under the belt cover. | 1. Adjust the self-propel drive cable. Replace the cable if necessary.<br>2. Clean the debris from under the belt cover. |

# The Toro Starting Guarantee

A Two-Year Limited Warranty on All
Toro GTS®-2 Engines

## Conditions and Products Covered

The Toro Company and its affiliate, Toro Warranty Company, pursuant to an agreement between them, jointly guarantee that your Toro Engine will start on the first or second pull for two years from the date of purchase—if you provide the routine maintenance it requires—or we will fix it free of charge. This warranty covers the cost of parts and labor, but you must pay transportation costs.

## Instructions for Obtaining Warranty Service

If the starting performance of your Toro Engine should diminish to the point where it will not start in one or two pulls by a normal, able-bodied adult, you should follow the procedures below:

1. Contact any Authorized Service Dealer, Master Service Dealer, or Toro Distributor (the Yellow Pages of your telephone directory is a good reference source). Or, call 1-800-421-9684 for the Toro 24 hour dealer locator system.
2. You will be instructed to return the product to that outlet or another Authorized Toro Service outlet which might be more convenient.
3. Bring the product, your maintenance records, and proof of purchase to the Service Dealer.

If for any reason you are dissatisfied with the Service Dealer's analysis of your engine's starting condition, or the assistance provided, please feel free to contact us at:

Customer Service Department
Toro Warranty Company
8111 Lyndale Avenue South
Bloomington, MN 55420-1196
952-888-8801 or 800-421-9684

## Owner Responsibilities

You must maintain your Toro Engine by following the maintenance schedule detailed in the operator's manual. You must record this work in the maintenance chart provided in your operator's manual and keep your proof of purchase. Such routine maintenance, whether performed by a dealer or by you, is at your expense.

## Items and Conditions Not Covered

There is no other express warranty except for The Toro Total Coverage Guarantee and special emission system coverage on some products. This warranty does not cover the following:

- Any repairs on products used commercially
- Normal maintenance including replacement of spark plugs, air filter, fuel filter, and carburetor adjustments
- Oil change and lubrication
- Repairs or adjustments due to the following:
  - failure to follow proper maintenance procedures
  - rotary mower blade striking an object
  - contaminants in the fuel system
  - improper fuel or fuel mixture (consult your operator's manual if in doubt)
  - failure to drain the fuel system prior to any period of non-use over three months
  - operation misuse, neglect, or accidents
  - repairs or attempted repairs by anyone other than an Authorized Service Dealer
- Special operational conditions where starting may require more than two pulls, including the following:
  - first time starts after extended period of non-use or seasonal storage
  - cool temperature starts such as those found in early spring and late autumn (applies to rotary products only)
  - improper starting procedures

    If you are having difficulty starting your unit, please check the operator's manual to ensure you are using the correct starting procedures. This can save an unnecessary visit to a Service Dealer.

All warranty repairs reimbursable under this warranty must be performed by an Authorized Toro Service Dealer using Toro approved replacement parts.

## General Conditions

Repair by an Authorized Toro Service Dealer is your sole remedy under this warranty.

**Neither The Toro Company nor Toro Warranty Company is liable for indirect, incidental or consequential damages in connection with the use of the Toro Products covered by this warranty, including any cost or expense of providing substitute equipment or service during reasonable periods of malfunction or non-use pending completion of repairs under this warranty.**

All implied warranties of merchantability (that the product is fit for ordinary use) and fitness for use (that the product is fit for a particular purpose) are limited to the duration of the express warranty.

Some states do not allow exclusions of incidental or consequential damages, or limitations on how long an implied warranty lasts, so the above exclusions and limitations may not apply to you.

This warranty gives you specific legal rights, and you may also have other rights which vary from state to state.

## Guaranteed to Start Maintenance Record

To keep the starting guarantee in effect, you must perform the following maintenance after every 25 operating hours, more often in dusty and dirty conditions. Follow the procedures in this operator's manual and record all maintenance activities on this chart.

| Date | Hours Used | Air Cleaner Service | Change Oil (does not apply to two-cycle) | Lubricate Wheels | Check Spark Plug | Storage Preparation |
|---|---|---|---|---|---|---|
| | | | | | | |
| | | | | | | |
| | | | | | | |
| | | | | | | |

| Date | Hours Used | Air Cleaner Service | Change Oil (does not apply to two-cycle) | Lubricate Wheels | Check Spark Plug | Storage Preparation |
|---|---|---|---|---|---|---|
| | | | | | | |
| | | | | | | |
| | | | | | | |

Gas, Cordless, Electric, and 21″ Commercial Duty Walk Mowers

# The Toro Total Coverage Guarantee

A Full Warranty
(Limited Warranty for Commercial Use)

## Conditions and Products Covered

The Toro Company and its affiliate, Toro Warranty Company, pursuant to an agreement between them, jointly promise to repair any Toro Product used for normal residential purposes* if defective in materials or workmanship or if it stops functioning due to the failure of a component. The following time periods apply from the date of purchase:

| Products | Warranty Period |
|---|---|
| • Super Recycler® Walk Mowers | 5 year full warranty |
| • VacuPower® Walk Mowers | 5 year full warranty |
| • All Other Mowers | 2 year full warranty |
| • All Batteries | 1 year full warranty |

This warranty includes the cost of parts and labor, but you must pay transportation costs.

This warranty applies to all gas, cordless, and electric consumer walk power mowers.

* Normal residential purposes means use of the product on the same lot as your home. Use at more than one location is considered commercial use, and the commercial use warranty would apply.

## Limited Warranty for Commercial Use

Toro Walk Power Mowers used for commercial, institutional, or rental use are warranted against defects in materials or workmanship. Components failing due to normal wear are not covered by this warranty. The following time periods apply from the date of purchase:

| Products | Warranty Period | |
|---|---|---|
| | Engine | Entire Unit |
| • 21″ Commercial Duty Walk Mowers | 2 year limited | 1 year limited |
| • All Other Mowers | 45 day limited | 45 day limited |

## Instructions for Obtaining Warranty Service

Should you feel your Toro Product contains a defect in materials or workmanship, contact the dealer who sold you the product or any Authorized Service Dealer or Master Service Dealer. The Yellow Pages of your telephone directory is a good reference source. The dealer will either arrange service at his/her dealership or recommend another Authorized Service Dealer who may be more convenient. You may need proof of purchase (copy of registration card, sales receipt, etc.) for warranty validation.

If for any reason you are dissatisfied with the Service Dealer's analysis of the defect in materials or workmanship or if you need a referral to a Toro Service Dealer, please feel free to contact us at:

Customer Service Department
Toro Warranty Company
8111 Lyndale Avenue South
Bloomington, MN 55420-1196
952-888-8801 or 800-421-9684

## Owner Responsibilities

You must maintain your Toro Product by following the maintenance procedures described in the operator's manual. Such routine maintenance, whether performed by a dealer or by you, is at your expense.

## Items and Conditions Not Covered

There is no other express warranty except for special emission system coverage on some products and the Toro Starting Guarantee on GTS Engine. This express warranty does not cover:

- Cost of regular maintenance service or parts, such as filters, fuel, lubricants, oil changes, spark plugs, blade sharpening, worn blade, cable/linkage adjustments, or brake and clutch adjustments.
- Any product or part which has been altered or misused or required replacement or repair due to accidents or lack of proper maintenance.
- Repairs necessary due to improper fuel, contaminants in the fuel system, or failure to properly prepare the fuel system prior to any period of non-use over three months.
- Repairs necessary due to improper battery care, electrical supply irregularities, or failure to properly prepare the mower prior to any period of non-use.
- Pickup and delivery charges.

All repairs covered by this warranty must be performed by an Authorized Toro Service Dealer using Toro approved replacement parts.

## General Conditions

Repair by an Authorized Toro Service Dealer is your sole remedy under this warranty.

Neither The Toro Company nor Toro Warranty Company is liable for indirect, incidental or consequential damages in connection with the use of the Toro Products covered by this warranty, including any cost or expense of providing substitute equipment or service during reasonable periods of malfunction or non-use pending completion of repairs under this warranty. Some states do not allow exclusions of incidental or consequential damages, or limitations on how long an implied warranty lasts, so the above exclusions and limitations may not apply to you.

This warranty gives you specific legal rights, and you may also have other rights which vary from state to state.

## Countries Other than the United States or Canada

Customers who have purchased Toro products exported from the United States or Canada should contact their Toro Distributor (Dealer) to obtain guarantee policies for your country, province, or state. If for any reason you are dissatisfied with your Distributor's service or have difficulty obtaining guarantee information, contact the Toro importer. If all other remedies fail, you may contact us at Toro Warranty Company.

Part No. 374-0000 Rev. -