FORM NO. 3310-537

TORO®

MODEL NO. 31763-400001 & UP
MODEL NO. 31756-400001 & UP
MODEL NO. 31263-400001 & UP

# PARTS CATALOG

## 826 SNOWTHROWER

July 73

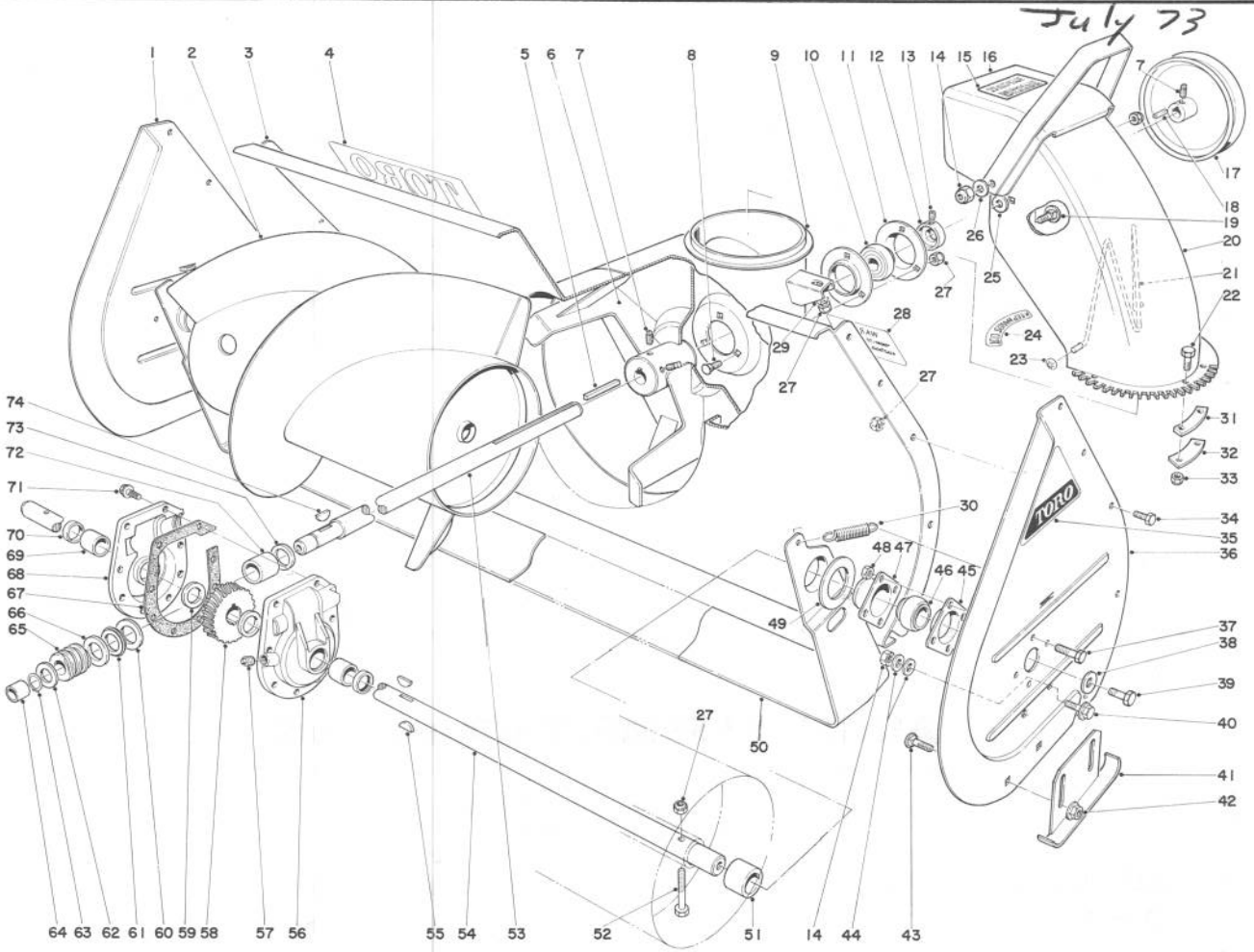


## AUGER ASSEMBLY

| Ref. No. | Part No. | Description | No. Used |
|---|---|---|---|
| 1 | 8-8450 | Auger Side Plate (R.H.) | 1 |
| 2 | 11-6900 | Auger (R.H.) | 1 |
| * | 11-6890 | Auger (L.H.) | 1 |
| 3 | 5-8579 | Auger Housing (Incl. Ref. 28) | 1 |
| 4 | 18-2150 | Decal | 1 |
| 5 | 6-8590 | Key | 1 |
| 6 | 19-8890 | Impeller | 1 |
| 7 | 3242-4 | Set Screw | 4 |
| 8 | 3230-1 | Carriage Bolt | 3 |
| 9 | 5-7250 | Collar Support | 1 |
| 10 | 251-224 | Bearing | 1 |
| 11 | 251-229 | Bearing Flange | 2 |
| 12 | 251-231 | Locking Collar | 1 |

| Ref. No. | Part No. | Description | No. Used |
|---|---|---|---|
| 13 | 3245-32 | Set Screw | 2 |
| 14 | 32152-2 | Locknut | 4 |
| 15 | 10-2980 | Decal, Warning | 1 |
| 16 | 5-8589 | Deflector (Incl. Ref. 15) | 1 |
| 17 | 5-7400 | Impeller Pulley | 1 |
| 18 | 3-6857 | Key | 1 |
| 19 | 3231-27 | Carriage Bolt | 2 |
| 20 | 8-9130 | Upper Chute | 1 |
| 21 | 12-2040 | Chute Wire | 1 |
| 22 | 3290-359 | Capscrew | 6 |
| 23 | 3290-326 | Push Nut | 2 |
| 24 | 5-9830 | Decal | 1 |
| 25 | 20-4320 | Rubber Washer | 2 |

*Not Illustrated

Copyright 1973 by
The Toro Company
Bloomington, Minnesota 55420 U.S.A.

Price $1.00

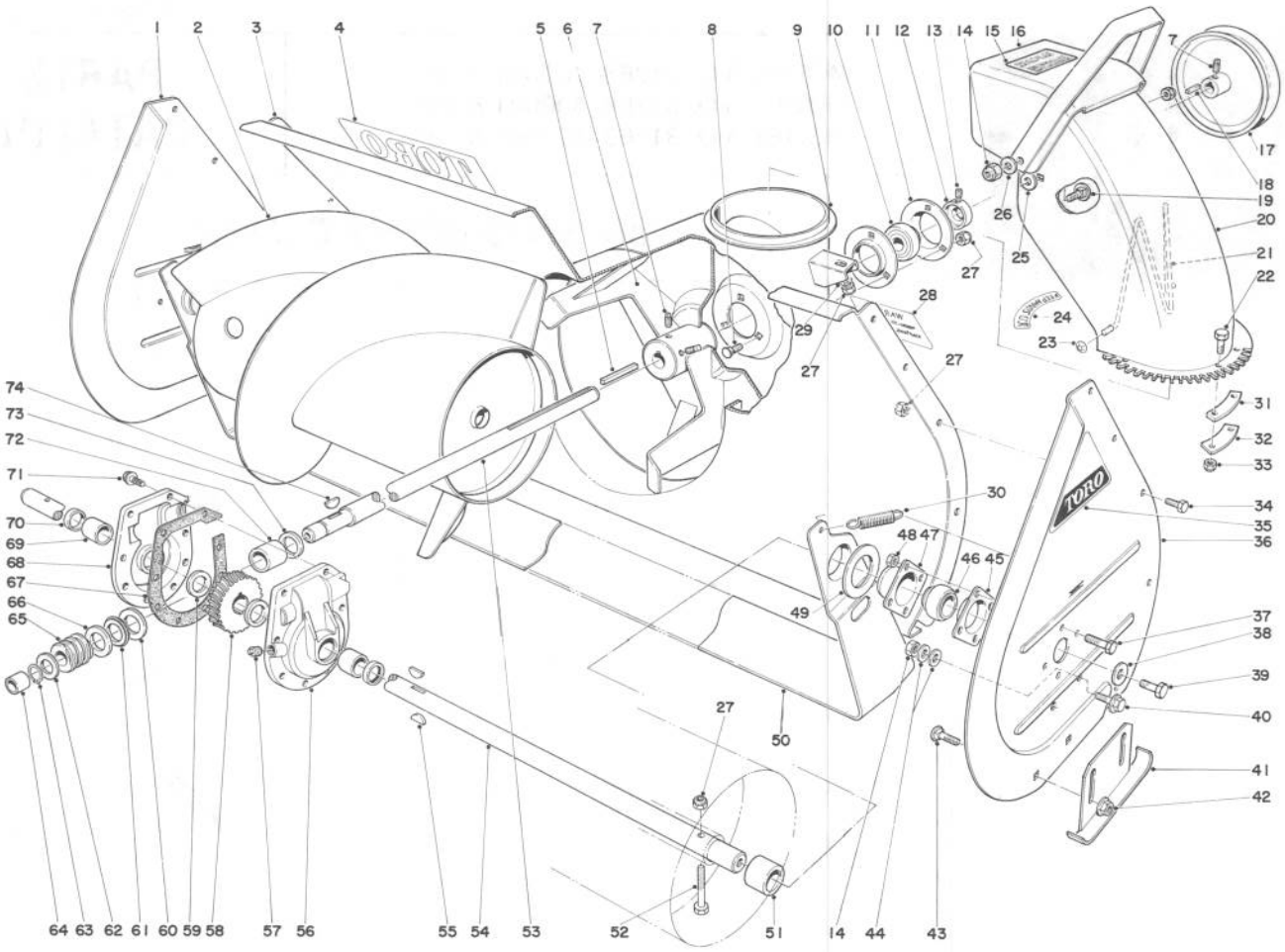


# AUGER ASSEMBLY (Continued)

| Ref. No. | Part No. | Description | No. Used |
|---|---|---|---|
| 26 | 3290-340 | Washer — Belleville | 2 |
| 27 | 32152-1 | Locknut | 16 |
| 28 | 10-2970 | Decal | 1 |
| 29 | 3290-238 | Pyramidal Washer | 1 |
| 30 | 5-7290 | Scraper Spring | 2 |
| 31 | 6-5560 | Chute Tab Spacer | 3 |
| 32 | 6-5570 | Upper Chute Tab | 3 |
| 33 | 32146-18 | Locknut | 6 |
| 34 | 322-2 | Capscrew | 10 |
| 35 | 17-6500 | Decal | 2 |
| 36 | 8-8440 | Sideplate (L.H.) | 1 |
| 37 | 321-3 | Capscrew | 8 |
| 38 | 3-0750 | Flatwasher | 2 |
| 39 | 323-6 | Capscrew | 2 |
| 40 | 3234-1 | Capscrew | 2 |
| 41 | 8-8460 | Skid | 2 |
| 42 | 3290-357 | Flange Nut | 4 |
| 43 | 3231-27 | Carriage Bolt | 4 |
| 44 | 3256-4 | Washer | 4 |
| 45 | 20-1000 | Bearing Flange Rear | 2 |

| Ref. No. | Part No. | Description | No. Used |
|---|---|---|---|
| 46 | 20-0980 | Bearing | 2 |
| 47 | 20-0990 | Bearing Flange Front | 2 |
| 48 | 32152-4 | Locknut | 8 |
| 49 | 20-0300 | Scraper Blade Spacer | 2 |
| 50 | 19-9140 | Scraper Blade | 1 |
| 51 | 19-9150 | Auger Spacer | 2 |
| 52 | 17-7030 | Auger Bolt | 2 |
| 53 | 19-8540 | Impeller Shaft | 1 |
| 54 | 11-7000 | Auger Shaft | 1 |
| 55 | 3257-33 | Woodruff Key | 2 |
| 56 | 19-6970 | Gear Case L.H. (Incl. Ref. 69 & 70) | 1 |
| 57 | 281-1 | Pipe Plug | 1 |
| 58 | 5-7180 | Worm Gear | 1 |
| 59 | 252-71 | Thrust Bearing | 2 |
| 60 | 252-78 | Thrust Washer | 1 |
| 61 | 252-76 | Thrust Bearing | 1 |
| 62 | 3-8664 | Washer | 1 |
| 63 | 32120-72 | Retaining Ring | 1 |
| 64 | 256-32 | Bushing | 1 |

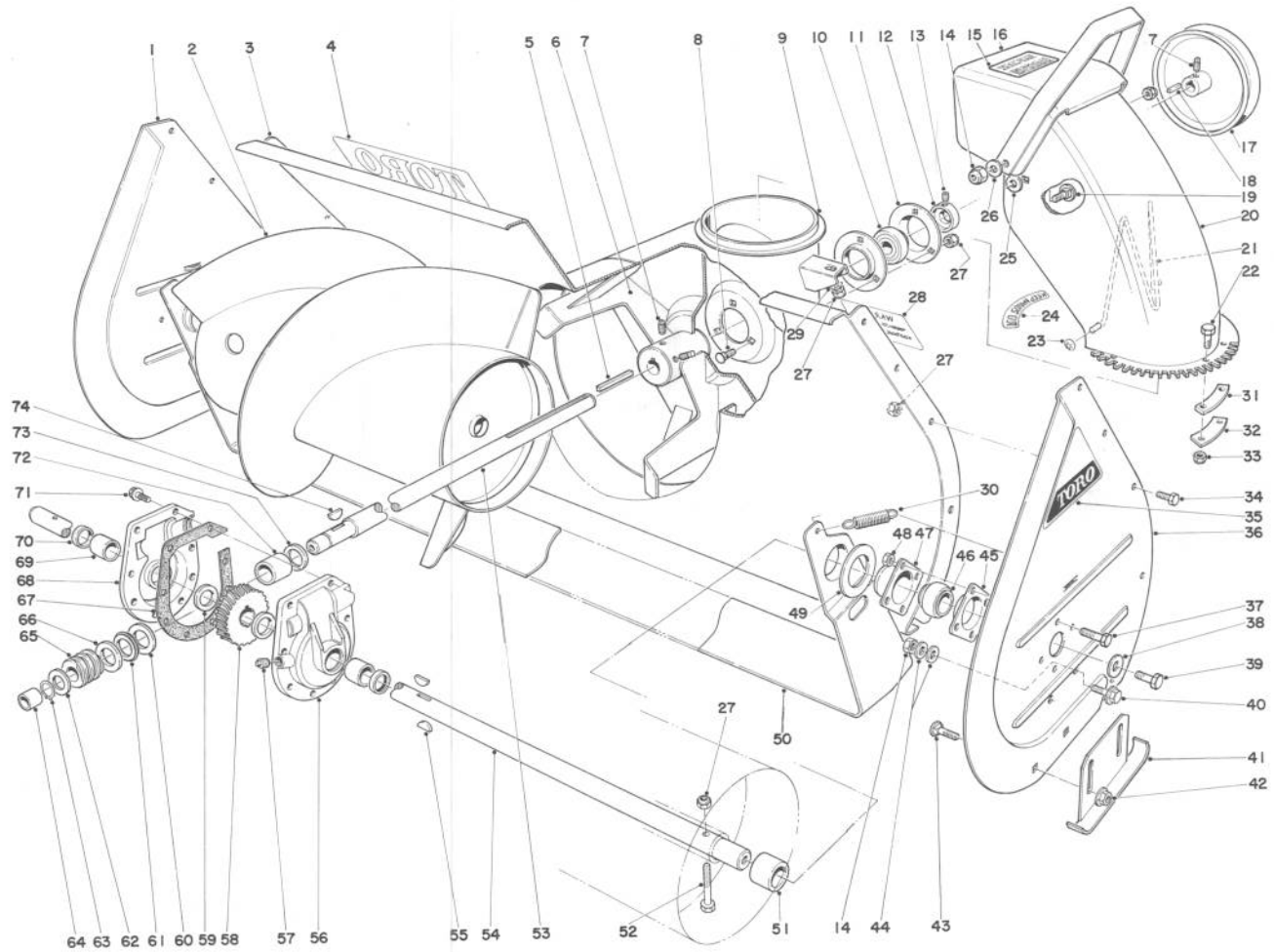


# AUGER ASSEMBLY (Continued)

| Ref. No. | Part No. | Description | No. Used |
|---|---|---|---|
| 65 | 5-7170 | Worm | 1 |
| 66 | 252-77 | Thrust Washer | 1 |
| 67 | 19-8520 | Gasket | 1 |
| 68 | 19-6980 | Gear Case R.H. (Incl. Ref. 69 & 70) | 1 |
| 69 | 256-237 | Bushing | 2 |
| 70 | 7-0045 | Oil Seal | 2 |

| Ref. No. | Part No. | Description | No. Used |
|---|---|---|---|
| 71 | 32144-11 | Self-Tapping Screw | 8 |
| 72 | 20-3210 | Bushing | 1 |
| 73 | 237-87 | Seal | 1 |
| 74 | 3257-23 | Woodruff Key | 1 |
| * | 20-0640 | Drift Breaker Kit Optional | 1 |
| * | 20-2850 | Heavy Duty Skid Kit Optional | 1 |
| ** | 19-6990 | Gear Case Assembly Complete | 1 |

*Optional
**Not Illustrated

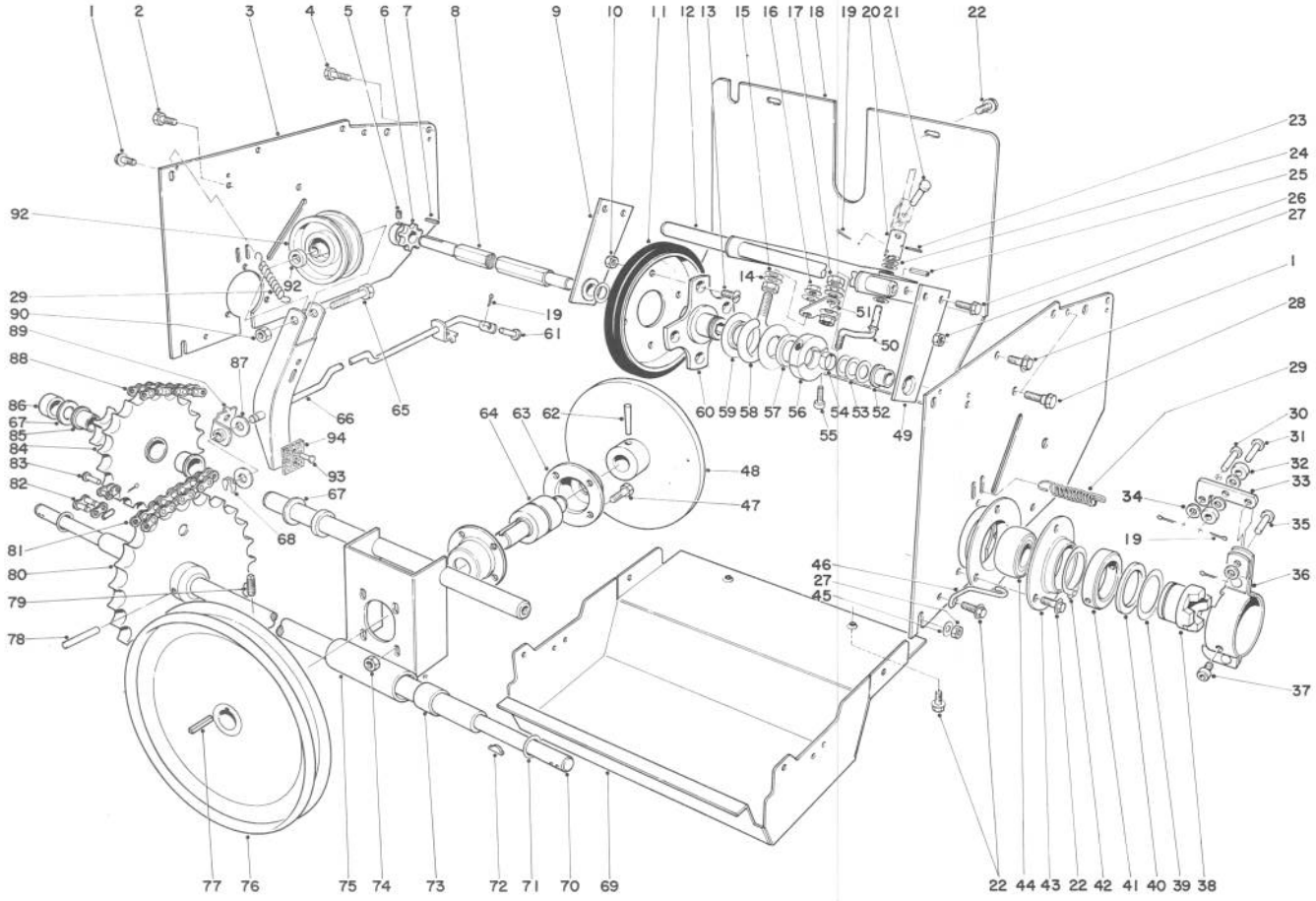

# TRACTION ASSEMBLY

| Ref. No. | Part No. | Description | No. Used |
|---|---|---|---|
| 1 | 3234-1 | Hex Flange Screw | 9 |
| 2 | 32104-98 | Self-Tapping Screw | 1 |
| 3 | 20-2320 | Drive Side Plate | 2 |
| 4 | 32104-6 | Self-Tapping Screw | 1 |
| 5 | 3245-32 | Set Screw | 2 |
| 6 | 5-9820 | Sprocket | 1 |
| 7 | 3-6168 | Square Key | 1 |
| 8 | 11-8940 | Friction Wheel Shaft | 1 |
| 9 | 11-8040 | Hex Shaft Mount R.H. (Incl. Ref. 52) | 1 |
| 10 | 32146-5 | Locknut | 4 |
| 11 | 3-5461 | Disc Assembly | 1 |
| 12 | 11-8010 | Dead Shaft Bracket | 1 |
| 13 | 32108-94 | Flat Hd. Screw | 4 |
| 14 | 3290-301 | Spring Washer | 4 |
| 15 | 3256-45 | Washer | 2 |
| 16 | 32128-12 | Flange Nut | 2 |
| 17 | 32146-6 | Locknut | 2 |
| 18 | 8-7950 | Rear Shield | 1 |
| 19 | 3272-5 | Cotter Pin | 3 |
| 20 | 11-8070 | Tube – U Joint | 1 |
| 21 | 283-31 | Clevis Pin | 1 |
| 22 | 32144-10 | Self-Tapping Screw | 14 |
| 23 | 32121-50 | Roll Pin | 2 |
| 24 | 3-6712 | Spacer | 3 |
| 25 | 32121-11 | Roll Pin | 2 |

| Ref. No. | Part No. | Description | No. Used |
|---|---|---|---|
| 26 | 32144-11 | Self-Tapping Screw | 4 |
| 27 | 32146-2 | Locknut | 9 |
| 28 | 11-8140 | Shoulder Screw | 4 |
| 29 | 10-3890 | Extension Spring | 3 |
| 30 | 283-29 | Clevis Pin | 2 |
| 31 | 283-17 | Clevis Pin | 2 |
| 32 | 10-3910 | Clutch Roller | 4 |
| 33 | 20-1050 | Clutch Cam Arm | 2 |
| 34 | 3256-21 | Washer | 10 |
| 35 | 283-16 | Clevis Pin | 2 |
| 36 | 20-2290 | Clutch Mount Bracket | 2 |
| 37 | 3274-42 | Hex Socket Capscrew | 4 |
| 38 | 20-2870 | Wheel Clutch | 2 |
| 39 | 10-3980 | Thrust Washer | 2 |
| 40 | 256-214 | Thrust Bearing | 2 |
| 41 | 10-3860 | Clutch Mount Collar | 2 |
| 42 | 32151-35 | Retaining Ring | 2 |
| 43 | 20-1020 | Bearing Flange | 4 |
| 44 | 20-1010 | Bearing | 2 |
| 45 | 3256-25 | Washer | 2 |
| 46 | 11-0610 | Clutch Retainer | 2 |
| 47 | 322-3 | Capscrew | 4 |
| 48 | 11-7940 | Friction Plate | 1 |
| 49 | 11-8030 | Hex Shaft Mount L.H. (Incl. Ref. 52) | 1 |
| 50 | 11-8090 | Connecting Rod | 1 |

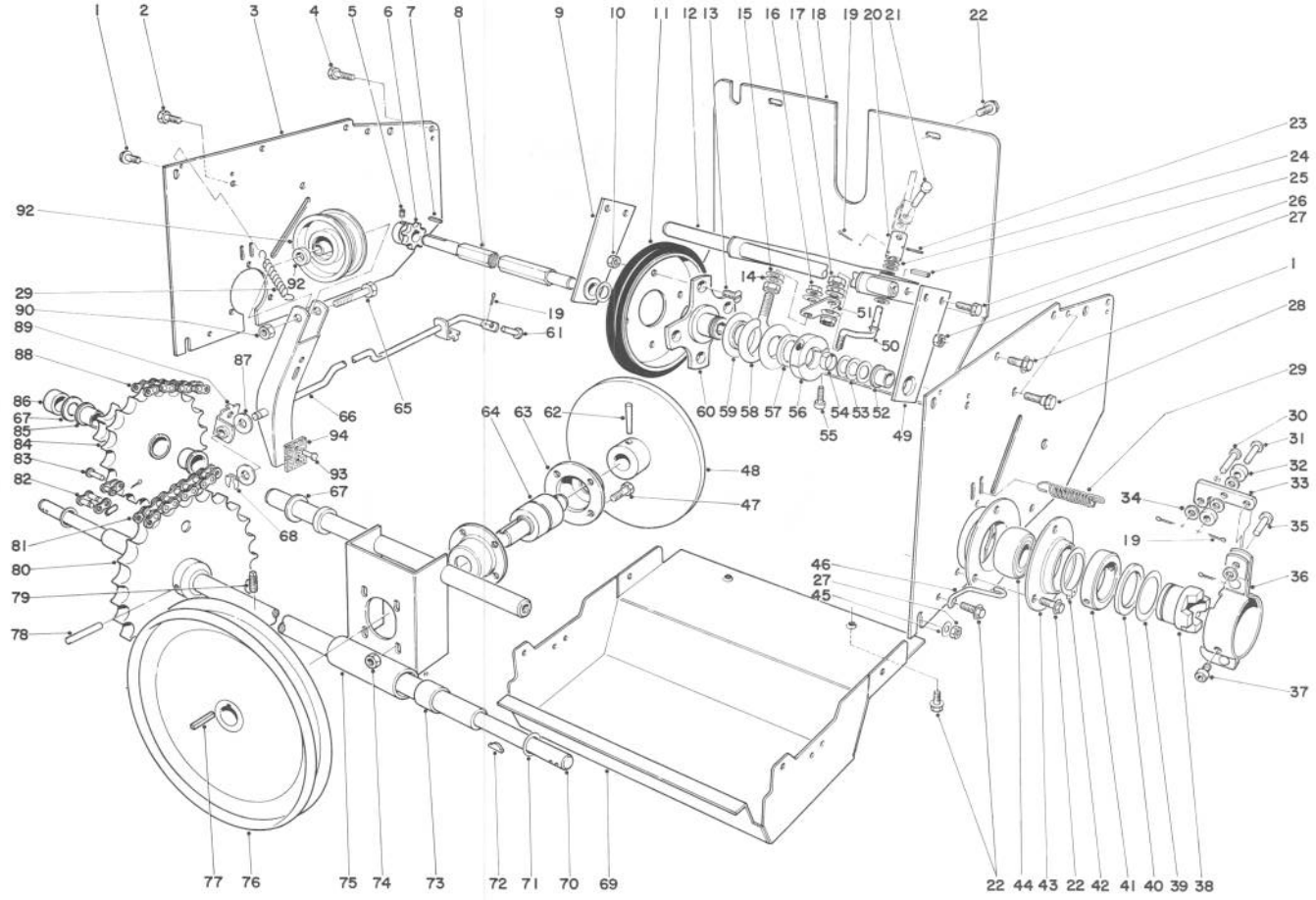

# TRACTION ASSEMBLY (Continued)

| Ref. No. | Part No. | Description | No. Used |
|---|---|---|---|
| 51 | 11-8060 | Shift Rod Pivot | 1 |
| 52 | 256-219 | Bushing | 2 |
| 53 | 5-7570 | Washer | 4 |
| 54 | 11-3180 | Split Spacer | 1 |
| 55 | 3274-26 | Hex Socket Capscrew | 2 |
| 56 | 20-4610 | Collar | 1 |
| 57 | 252-71 | Thrust Bearing | 1 |
| 58 | 11-8050 | Slider Ring Collar | 1 |
| 59 | 11-8080 | Slider Ring | 2 |
| 60 | 20-3310 | Hub | 1 |
| 61 | 283-1 | Clevis Pin | 1 |
| 62 | 3285-11 | Groove Pin | 1 |
| 63 | 10-0070 | Bearing Housing | 2 |
| 64 | 8-8680 | Friction Plate Shaft | 1 |
| 65 | 323-8 | Capscrew | 1 |
| 66 | 5-9979 | Auger Idler & Brake Ass'y (Incl. Ref. 93 - 94) | 1 |
| 67 | 3-6498 | Thrust Washer | 2 |
| 68 | 32151-43 | Klip-Ring | 1 |
| 69 | 11-7140 | Lower Shield | 1 |
| 70 | 8-8760 | Axle Shaft | 1 |
| 71 | 3-0737 | Thrust Washer | 2 |
| 72 | 3257-19 | Hi-Pro Key | 2 |
| 73 | 256-232 | Bushing | 2 |
| 74 | 32149-1 | Locknut | 4 |

| Ref. No. | Part No. | Description | No. Used |
|---|---|---|---|
| 75 | 5-8299 | Bulkhead (Incl. Ref. 73) | 1 |
| 76 | 5-7410 | Drive Pulley | 1 |
| 77 | 3-6168 | Key | 1 |
| 78 | 3285-11 | Groove Pin | 1 |
| 79 | 3242-4 | Set Screw | 2 |
| 80 | 8-8770 | Sprocket | 1 |
| 81 | 8-8810 | Lower Chain | 1 |
| 82 | 2710-6 | Connecting Link | 2 |
| 83 | 2710-10 | Half Link | 2 |
| 84 | 5-7070 | Sprocket (Incl. Ref. 85) | 1 |
| 85 | 256-215 | Bushing | 2 |
| 86 | 20-4580 | Idler Spacer | 1 |
| 87 | 3256-5 | Washer | 2 |
| 88 | 5-9430 | Drive Chain | 1 |
| 89 | 20-2940 | Clutch Rod Bracket | 1 |
| 90 | 32146-2 | Locknut | 1 |
| 91 | 20-0010 | Spacer | 1 |
| 92 | 3-4244 | Idler Pulley | 1 |
| 93 | 3295-23 | Rivet | 2 |
| 94 | 20-3100 | Brake Pad | 1 |
| * | 5-9959 | Loose Parts Assembly | 1 |
| * | 59051 | Grader Blade Optional | 1 |
| * | 12-8100 | Snow Cab Optional | 1 |
| * | 12-9900 | Sweeper Optional | 1 |

*Not Illustrated

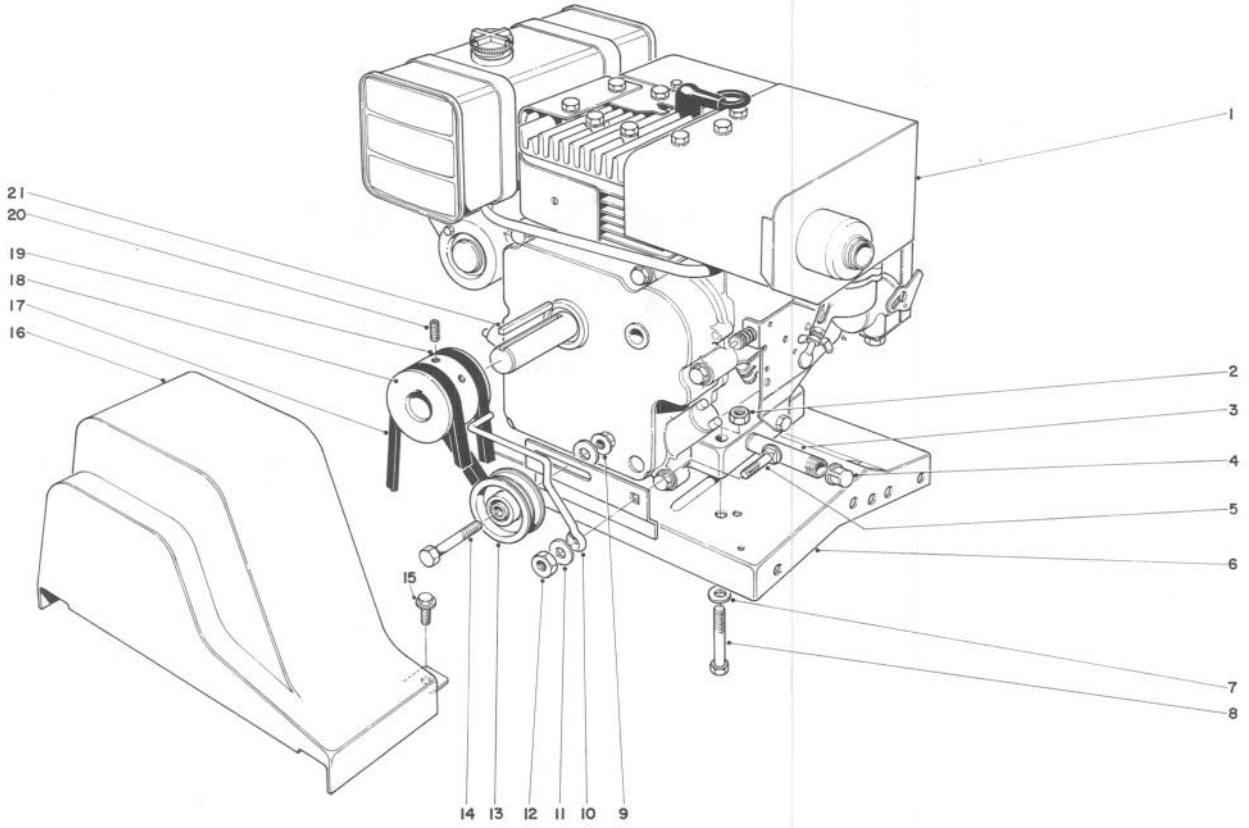


# ENGINE ASSEMBLY

| Ref. No. | Part No. | Description | No. Used |
|---|---|---|---|
| 1 | 221-435 | Engine | 1 |
| * | 221-444 | Engine | 1 |
| 2 | 32152-1 | Locknut | 4 |
| 3 | 289-20 | Pipe Nipple | 1 |
| 4 | 288-4 | Pipe Cap | 1 |
| 5 | 3231-27 | Carriage Bolt | 1 |
| 6 | 17-6950 | Engine Base | 1 |
| 7 | 3256-23 | Washer | 4 |
| 8 | 322-9 | Capscrew | 4 |
| 9 | 3290-357 | Locknut | 1 |
| 10 | 8-8830 | Belt Guide | 1 |
| 11 | 3256-25 | Washer | 2 |

| Ref. No. | Part No. | Description | No. Used |
|---|---|---|---|
| 12 | 32146-2 | Locknut | 1 |
| 13 | 3-4244 | Idler Pulley | 1 |
| 14 | 323-8 | Capscrew | 1 |
| 15 | 32144-10 | Self-Tapping Screw | 2 |
| 16 | 17-6550 | Belt Guard | 1 |
| 17 | 17-0850 | V-Belt | 1 |
| 18 | 11-9110 | Engine Pulley | 1 |
| 19 | 17-6540 | V-Belt | 1 |
| 20 | 3246-14 | Set Screw | 2 |
| 21 | 5-0930 | Key | 1 |
| * | 20-7200 | Starter Kit U.S.A. Optional | 1 |
| * | 10-4280 | Starter Kit Canada Optional | 1 |

*Optional

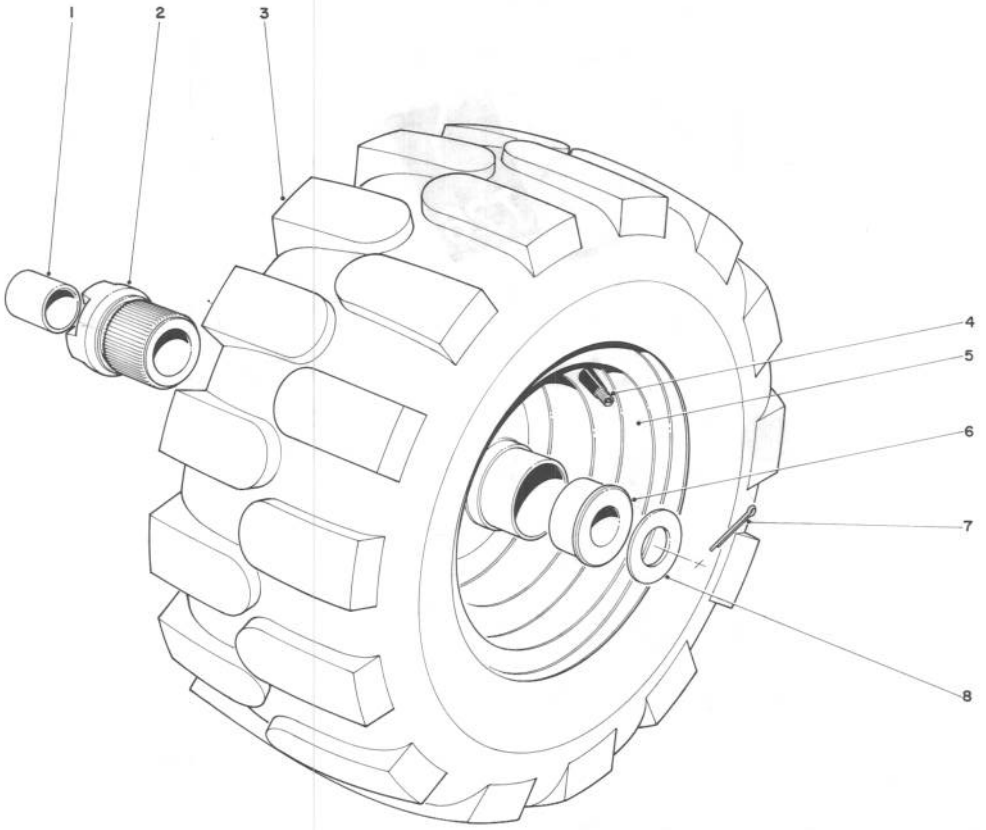


# WHEEL ASSEMBLY

| Ref. No. | Part No. | Description | No. Used |
|---|---|---|---|
| 1 | 256-205 | Bushing | 2 |
| 2 | 12-1130 | Jaw Hub | 2 |
| 3 | 231-78 | Tire | 2 |
| 4 | 232-27 | Valve Stem | 2 |
| 5 | 17-6610 | Rim | 2 |

| Ref. No. | Part No. | Description | No. Used |
|---|---|---|---|
| 6 | 256-212 | Bushing | 2 |
| 7 | 3272-17 | Cotter Pin | 2 |
| 8 | 3-8664 | Thrust Washer | 2 |
| * | 17-7620 | Tire Chains Optional D15C | 1 |
| | | 20-9800 Chains will fit the above tire | |

*Not Illustrated

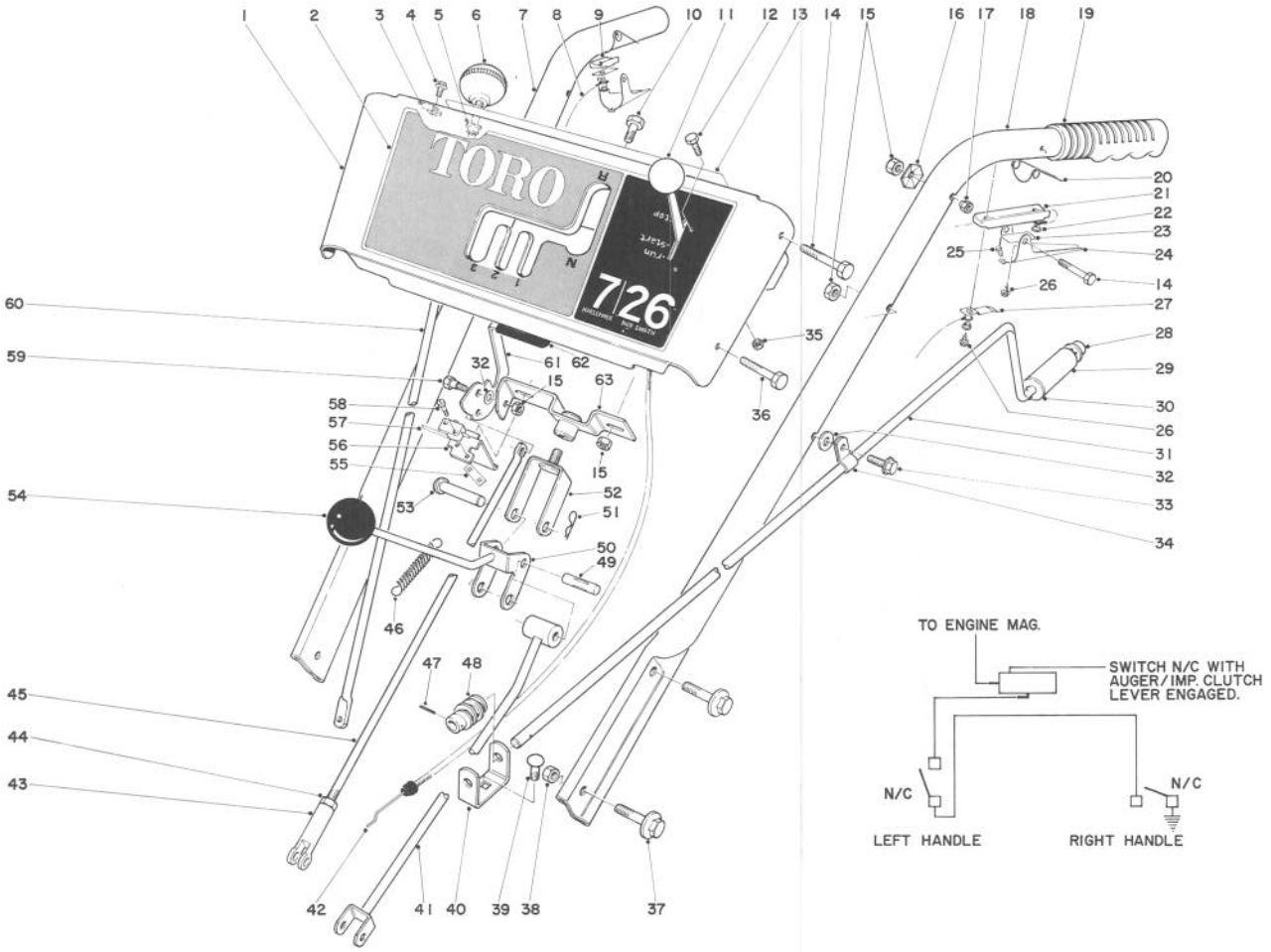


# HANDLE ASSEMBLY

| Ref. No. | Part No. | Description | No. Used |
|---|---|---|---|
| 1 | 5-9939 | Escutcheon Plate (Incl. Ref. 2 & 13) | 1 |
| 2 | 17-6650 | Escutcheon Decal | 1 |
| 3 | 20-2810 | Plastic Clip | 2 |
| 4 | 32104-76 | Self-Tapping Screw | 2 |
| 5 | 256-240 | Bushing | 2 |
| 6 | 233-10 | Knob | 2 |
| 7 | 20-1040 | Handle (Right) | 1 |
| 8 | 20-2120 | Wiring Harness | 1 |
| 9 | 17-5680 | Insulator — Safety Interlock | 1 |
| 10 | 321-3 | Capscrew | 2 |
| 11 | 233-25 | Knob | 1 |
| 12 | 3290-134 | Machine Screw | 2 |
| 13 | 11-8390 | Decal | 1 |
| 14 | 321-11 | Capscrew | 4 |
| 15 | 32152-4 | Locknut | 6 |
| 16 | 3290-257 | Pyramidal Washer | 2 |
| 17 | 32111-7 | Acorn Nut | 2 |
| 18 | 20-1030 | Handle (Left) | 1 |
| 19 | 6-0450 | Handle Grip | 2 |
| 20 | 17-5720 | Spring | 2 |
| 21 | 20-2110 | Insulator | 1 |
| 22 | 17-5700 | Washer — Insulator | 3 |
| 23 | 17-5690 | Contact — Safety Interlock | 2 |

| Ref. No. | Part No. | Description | No. Used |
|---|---|---|---|
| 24 | 17-5710 | Lever — Safety Interlock | 2 |
| 25 | 3290-358 | Plastic Rivet | 1 |
| 26 | 32104-75 | Self-Tapping Screw | 3 |
| 27 | 17-6510 | Contact Bracket | 1 |
| 28 | 3290-320 | Speed Nut — Push On | 1 |
| 29 | 20-2060 | Grip | 1 |
| 30 | 3256-24 | Washer | 1 |
| 31 | 8-8570 | Rod | 1 |
| 32 | 3256-23 | Washer | 2 |
| 33 | 32144-11 | Self-Tapping Screw | 1 |
| 34 | 2412-10 | Clip | 1 |
| 35 | 32146-18 | Locknut | 2 |
| 36 | 321-9 | Capscrew | 2 |
| 37 | 3234-1 | Flange Screw | 2 |
| 38 | 32146-2 | Locknut | 4 |
| 39 | 3230-15 | Carriage Bolt | 1 |
| 40 | 11-7110 | Worm Bracket | 1 |
| 41 | 11-8100 | Trunnion | 1 |
| 42 | 8-7790 | Throttle Control | 1 |
| 43 | 5-0865 | Clevis | 1 |
| 44 | 3220-3 | Jam Nut | 1 |
| 45 | 20-2310 | Drag Link | 1 |
| 46 | 8-9900 | Spring, Control Rod | 1 |

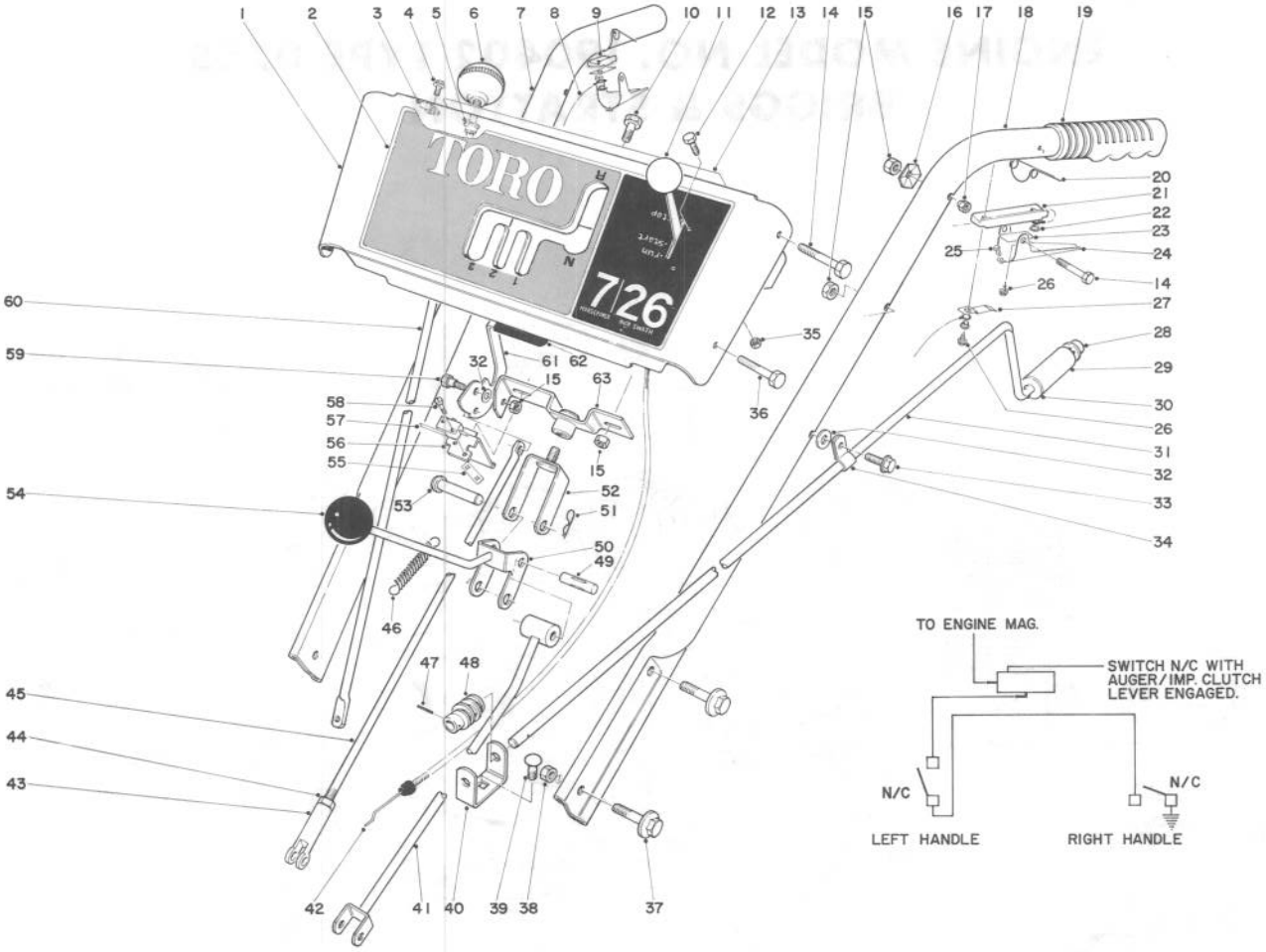


# HANDLE ASSEMBLY (Continued)

| Ref. No. | Part No. | Description | No. Used |
|---|---|---|---|
| 47 | 32121-50 | Roll Pin | 1 |
| 48 | 8-8600 | Worm Gear | 1 |
| 49 | 3284-2 | Roll Pin | 1 |
| 50 | 20-3050 | Shift Rod | 1 |
| 51 | 3290-322 | Hair Pin Cotter | 1 |
| 52 | 8-7910 | Pivot Bracket | 1 |
| 53 | 283-5 | Clevis Pin | 1 |
| 54 | 233-21 | Knob | 1 |
| 55 | 3290-354 | Speed Nut | 1 |

| Ref. No. | Part No. | Description | No. Used |
|---|---|---|---|
| 56 | 20-2100 | Switch Bracket | 1 |
| 57 | 12-3320 | Micro Switch | 1 |
| 58 | 3290-93 | Machine Screw | 2 |
| 59 | 11-9030 | Shoulder Bolt | 2 |
| 60 | 20-2330 | Wheel Clutch Rod | 2 |
| 61 | 17-6620 | Auger Clutch Handle | 1 |
| 62 | 11-8970 | Grip | 1 |
| 63 | 8-7930 | Swivel Block | 1 |

# ENGINE MODEL NO. 190402 TYPE 0755
# BRIGGS & STRATTON

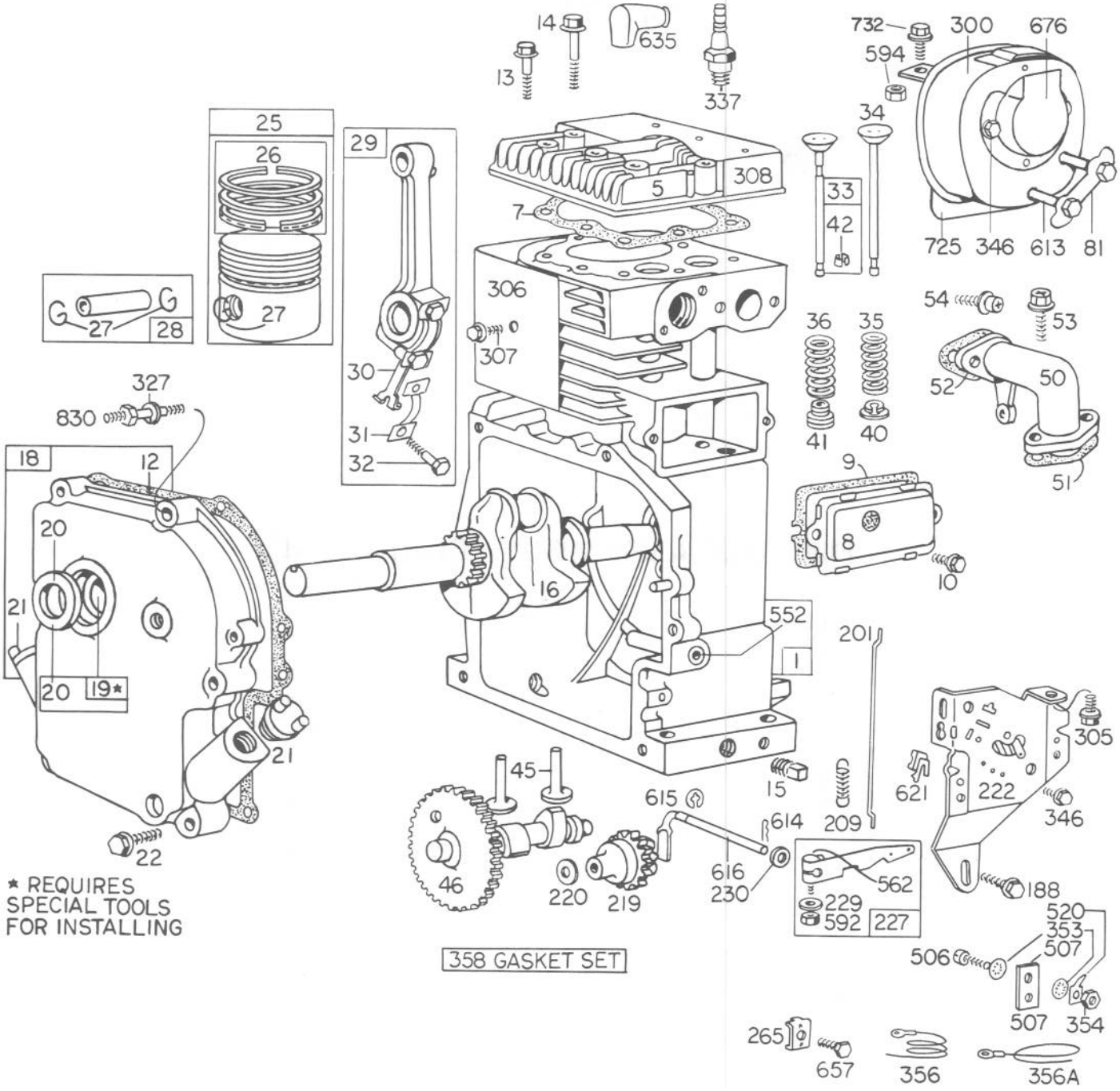

# ENGINE MODEL NO. 190402 TYPE 0755
# BRIGGS & STRATTON

| Ref. No. | Part No. | Description | No. Used |
|---|---|---|---|
| 1 | 390399 | Cylinder Assembly | 1 |
| 5 | 211778 | Head - Cylinder | 1 |
| 7 | *270430 | Gasket - Cylinder Head | 1 |
| 8 | 390321 | Breather Assembly | 1 |
| 9 | *27803 | Gasket - Valve Cover | 1 |
| 10 | 93536 | Screw - Sem | 1 |
| 12 | *27750 | Gasket - Crankcase Cover - 1/64" thick | 1 |
| | *27876 | Gasket - Crankcase Cover - .005" thick | 1 |
| | *27877 | Gasket - Crankcase Cover - .009" thick | 1 |
| 13 | 93210 | Screw - Cylinder Head (2-9/32" long) | 1 |
| 14 | 93211 | Screw - Cylinder Head (2-9/16" long) | 1 |
| 15 | 91084 | Plug - Oil Drain | 1 |
| 16 | 261077 | Crankshaft | 1 |
| 18 | 299167 | Cover Assy. - Crankcase | 1 |
| 19 | 295964 | Bushing - Crankcase Cover<br>Note: Requires special tools for installation. | 1 |
| 20 | 298423 | Seal - Oil | 1 |
| 21 | 66768 | Plug - Oil Filler | 1 |
| 22 | 93585 | Screw - Crankcase Cover Mounting Sem | 1 |
| 25 | 390347 | Piston Assembly - Standard | 1 |
| | 390348 | Piston Assembly - .010" O.S. | 1 |
| | 390349 | Piston Assembly - .020" O.S. | 1 |
| | 390350 | Piston Assembly - .030" O.S. | 1 |
| | | **PISTON RING SETS;**<br>Note: For Chrome Ring Set - Standard Size - order No. 299743. | |
| 26 | 299569 | Ring Set - Piston - Standard<br>Consists of:<br>211637 Ring - Piston, Comp., Top, Standard<br>211636 Ring - Piston, Comp., Center, Standard<br>211635 Ring - Piston, Oil, Std. | 1 |
| | 299570 | Ring Set - Piston - .010" O.S.<br>Consists of:<br>211649 Ring - Piston, Comp., Top, .010" O.S.<br>211650 Ring - Piston, Comp., Center, .010" O.S.<br>211651 Ring - Piston, Oil, .010" O.S. | 1 |
| | 299571 | Ring Set - Piston - .010" O.S.<br>Consists of:<br>211653 Ring - Piston, Comp., Top, .020" O.S.<br>211654 Ring - Piston, Comp., Center, .020" O.S.<br>211655 Ring - Piston, Oil, .020" O.S. | 1 |
| | 299572 | Ring Set - Piston - .030" O.S.<br>Consists of:<br>211657 Ring - Piston, Comp., Top, .030" O.S.<br>211658 Ring - Piston, Comp., Center, .030" O.S.<br>211659 Ring - Piston, Oil, .030" O.S. | 1 |
| 27 | 68546 | Lock - Piston Pin | 1 |
| 28 | 295840 | Pin Assy. - Piston - Standard | 1 |
| | 295841 | Pin Assy. - Piston - .005" O.S. | 1 |
| 29 | 390401 | Rod Assembly - Connecting<br>Note: For Connecting Rod with .020" undersize Crankpin Bore - Order No. 390773. | 1 |
| 30 | 222113 | Dipper - Connecting Rod | 1 |
| 31 | 222114 | Lock - Conn. Rod Screw | 1 |
| 32 | 92659 | Screw - Connecting Rod | 1 |
| 33 | 390419 | Valve - Exhaust | 1 |
| 34 | 261055 | Valve - Intake | 1 |
| 35 | 65906 | Spring - Intake Valve | 1 |
| 36 | 26828 | Spring - Exhaust Valve | 1 |
| 40 | 221596 | Retainer - Intake Valve | 1 |
| 41 | 292260 | Rotocoil - Exhaust Valve | 1 |
| 42 | 93630 | Retainer - Exhaust Valve Rotocoil | 2 |
| 45 | 260933 | Tappet - Valve | 1 |
| 46 | 210728 | Gear - Cam | 1 |
| 50 | 210705 | Elbow - Intake | 1 |
| 51 | *270684 | Gasket - Intake Elbow | 1 |
| 52 | *27828 | Gasket - Intake Elbow Mtg. | 1 |
| 53 | 93128 | Screw - Carburetor Mounting Sem | 1 |
| 54 | 93208 | Screw - Intake Elbow Mounting Sem | 1 |
| 81 | 222263 | Lock Muffler Mounting Screw | 1 |
| 188 | 93535 | Screw - Sem | 1 |
| 201 | 260872 | Link - Governor | 1 |
| 209 | 260695 | Spring - Governor | 1 |
| 219 | 297656 | Gear - Governor | 1 |
| 220 | 221551 | Washer - Thrust | 1 |

*Included in Gasket Set - Part No. 299577.

# ENGINE MODEL NO. 190402 TYPE 0755
# BRIGGS & STRATTON (Continued)

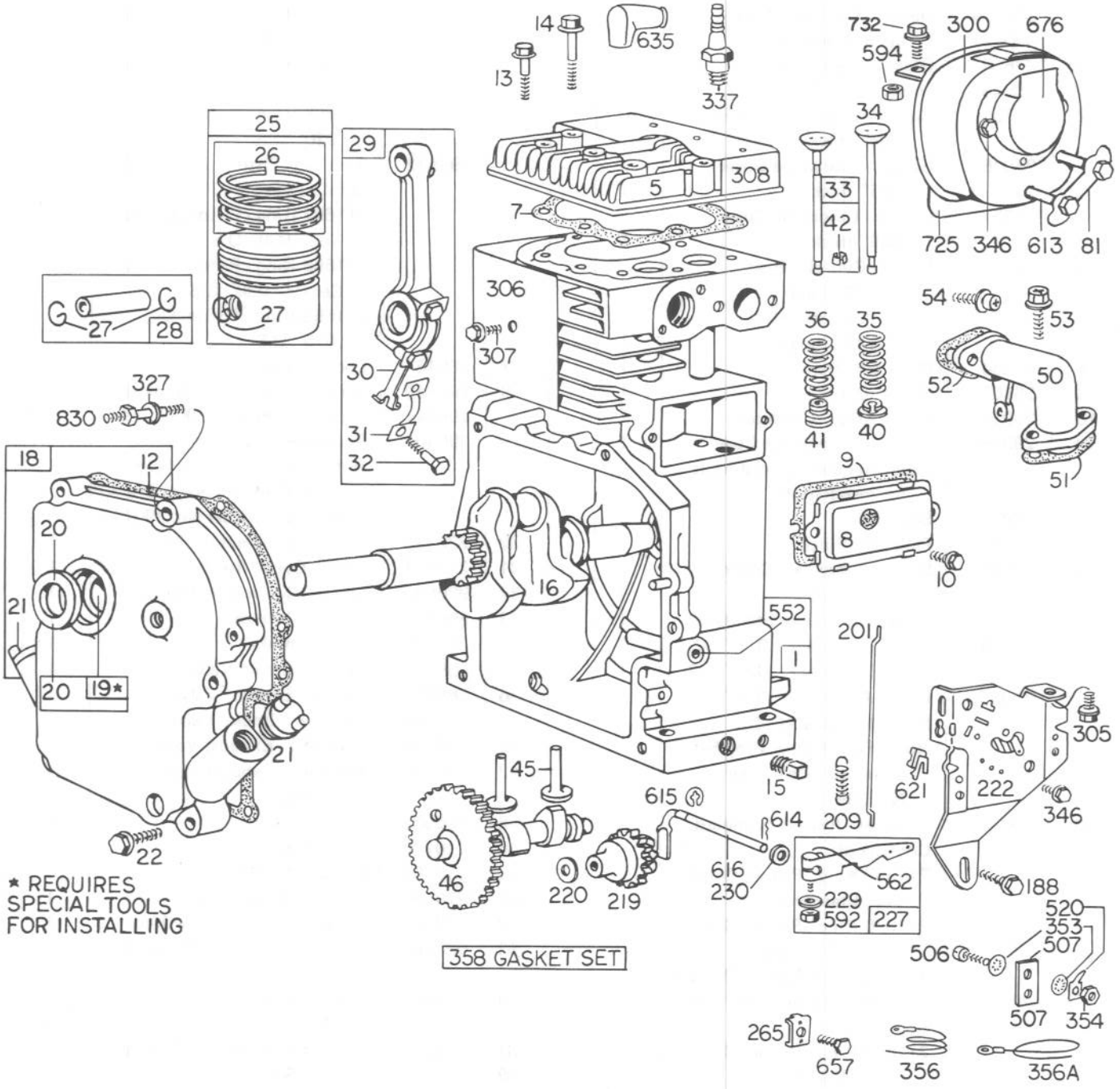


★ REQUIRES SPECIAL TOOLS FOR INSTALLING

358 GASKET SET

# ENGINE MODEL NO. 190402 TYPE 0755
# BRIGGS & STRATTON (Continued)

| Ref. No. | Part No. | Description | No. Used |
|---|---|---|---|
| 222 | 390670 | Plate - Governor Control | 1 |
| 227 | 299165 | Lever Assy. - Governor | 1 |
| 229 | 220680 | Washer | 1 |
| 230 | 221559 | Washer - Spacer | 1 |
| 265 | 221535 | Clamp - Casing | 1 |
| 300 | 390918 | Muffler - Exhaust | 1 |
| 305 | 93158 | Screw - Sem | 1 |
| 306 | 221898 | Shield - Cylinder | 1 |
| 307 | 93163 | Screw - Cylinder Shield Mtg. Sem | 1 |
| 308 | 221901 | Cover - Cylinder Head | 1 |
| 327 | 91388 | Washer - Lock | 1 |
| 337 | 298809 | Plug - Spark | 1 |
| | | Note: Spark Plugs 298809, use Ignition Cable Terminal No. 221798. | |
| 346 | 93014 | Screw - Sem | 1 |
| 353 | 92791 | Washer - Lock - Shakeproof | 3 |
| 354 | 90576 | Nut - Hex. | 2 |
| 356 | 299500 | Wire - Ground | 1 |

| Ref. No. | Part No. | Description | No. Used |
|---|---|---|---|
| 356A | 391255 | Wire - Ground | 1 |
| 358 | 299577 | Gasket Set | 1 |
| 506 | 90200 | Screw - Machine, Fil. Hd. | 1 |
| 507 | 66895 | Insulator | 1 |
| 520 | 93722 | Terminal - Spade | 1 |
| 552 | 230843 | Bushing - Governor Shaft | 1 |
| 562 | 92613 | Bolt - Governor Lever | 1 |
| 592 | 90356 | Nut - Hex. | 1 |
| 594 | 93203 | Nut - Hex. | 1 |
| 613 | 93704 | Screw Muffler Mounting | 1 |
| 614 | 93306 | Cotter - Hair Pin | 1 |
| 615 | 93307 | Retainer - E-Ring | 1 |
| 616 | 230842 | Crank - Governor | 1 |
| 621 | 297472 | Switch - Stop | 1 |
| 635 | 66538 | Elbow - Spark Plug | 1 |
| 657 | 93496 | Screw - Sem | 1 |
| 676 | 22226 | Deflector - Exhaust | 1 |
| 725 | 221885 | Shield - Heat | 1 |
| 732 | 93490 | Screw Sem | 1 |
| 830 | 93730 | Stud-Strap to Crankcase Cover | 1 |

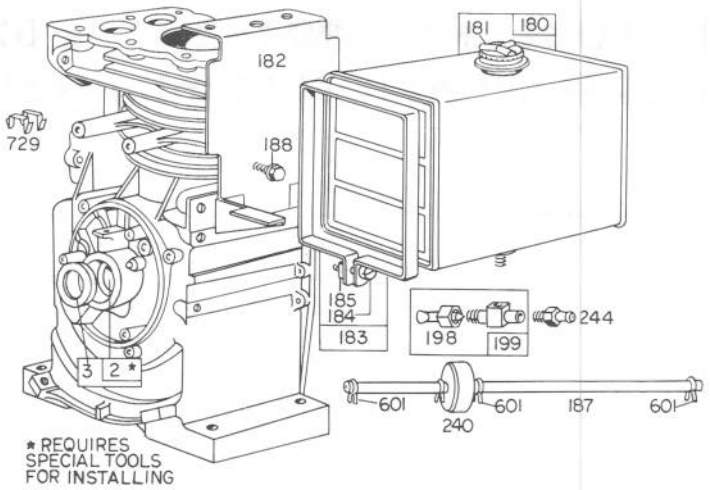


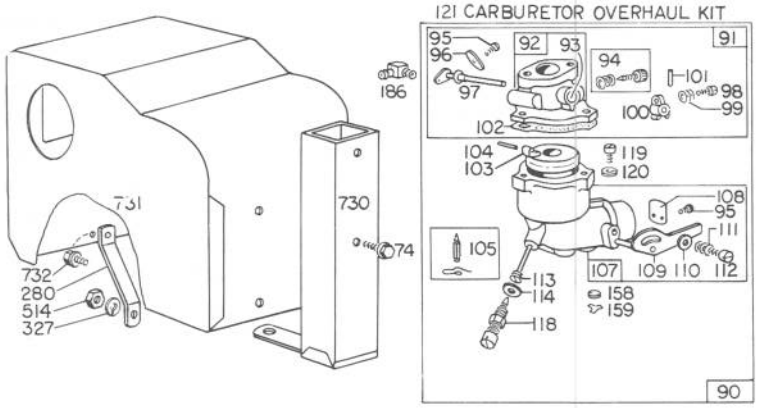


# CARBURETOR ASSEMBLY

| Ref. No. | Part No. | Description | No. Used |
|---|---|---|---|
| 2 | 295962 | Bushing - Cylinder | 1 |
| | | Note: Requires special tools for installation. | 1 |
| 3 | 294606 | Seal - Oil | 1 |
| 74 | 93042 | Screw - Sem | 1 |
| 90 | 390323 | Carburetor Assembly | 1 |
| 91 | 390404 | Body Assembly - Upper Carburetor | 1 |
| 92 | 390503 | Body - Upper Carburetor | 1 |
| 93 | 23108 | Bushing - Throttle Shaft | 1 |
| 94 | †292681 | Valve Assembly - Carburetor Idle | 1 |
| 95 | 93038 | Screw - Throttle and Choke Valve Mtg. Sem | 1 |
| 96 | 62940 | Valve - Throttle | 1 |
| 97 | 298826 | Shaft and Lever - Throttle | 1 |
| 98 | 91920 | Screw - Machine, Fil. Hd. | 1 |
| 99 | 26157 | Spring - Throttle Adjustment | 1 |
| 100 | 61967 | Stop - Throttle | 1 |
| 101 | 93043 | Pin — Throttle Stop | 1 |
| 102 | †27918 | Gasket - Carburetor Body | 1 |
| 103 | 99333 | Float - Carburetor | 1 |
| 104 | †230896 | Pin - Float Hinge | 1 |

| Ref. No. | Part No. | Description | No. Used |
|---|---|---|---|
| 105 | 299096 | Valve - Fuel Inlet | 1 |
| 107 | 390403 | Body Assembly - Lower Carburetor | 1 |
| 108 | 62872 | Valve - Choke | 1 |
| 109 | 298875 | Shaft and Lever - Choke | 1 |
| 110 | 62899 | Washer - Choke Lever | 1 |
| 111 | 26155 | Spring - Choke Lever | 1 |
| 112 | 23123 | Screw - Choke Lever | 1 |
| 113 | †390395 | Nozzle - Carburetor | 1 |
| 114 | †68667 | Gasket - Nozzle | 1 |
| 118 | 99525 | Valve - Needle | 1 |
| 119 | 90746 | Screw - Machine, Fil. Hd. | 1 |
| 120 | 92290 | Washer - Lock | 1 |
| 121 | 295938 | Carburetor Overhaul Kit | 1 |
| 158 | 27590 | Filter - Carburetor Drain | 1 |
| 159 | 220521 | Retainer - Carburetor Drain Filter | 1 |
| 180 | 290816 | Tank Assy. - Fuel | 1 |
| 181 | 297866 | Cap - Fuel Tank | 1 |
| 182 | 221935 | Bracket - Fuel Tank | 1 |
| 183 | 291367 | Strap Assy. - Fuel Tank | 1 |
| 184 | 91257 | Screw - Machine, Fil. Hd. | 1 |
| 185 | 90970 | Nut - Square | 1 |

†Included in Carburetor Overhaul Kit — Part No. 295938

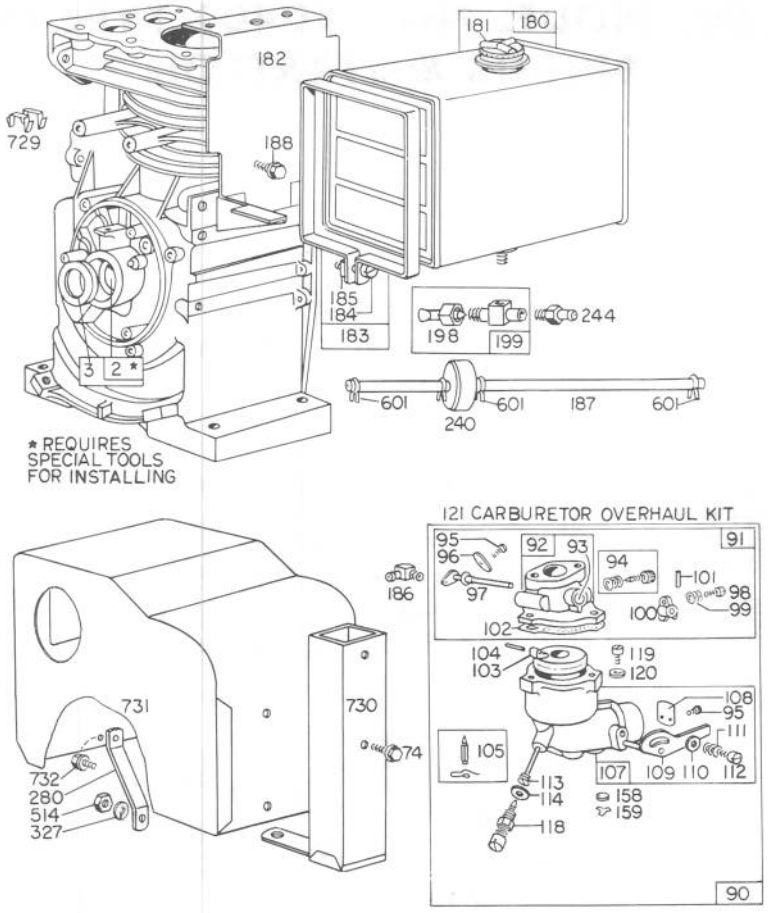


# CARBURETOR ASSEMBLY (Continued)

| Ref. No. | Part No. | Description | No. Used |
|---|---|---|---|
| 186 | 67218 | Connector - Fuel Pipe | 1 |
| 187 | 299942 | Pipe - Fuel | 1 |
| 188 | 93535 | Screw - Sem | 1 |
| 198 | 293934 | Valve - Fuel Shut-Off | 1 |
| 199 | 297563 | Outlet - Fuel Tank | 1 |
| 240 | 298090 | Filter - Fuel | 1 |
| 244 | 230318 | Connector - Fuel Pipe | 1 |
| 280 | 222372 | Strap - Support | 1 |

| Ref. No. | Part No. | Description | No. Used |
|---|---|---|---|
| 327 | 91388 | Washer - Lock | 1 |
| 514 | 93203 | Nut - Hex. | 1 |
| 601 | 93053 | Clamp - Fuel Pipe | 1 |
| 729 | 221907 | Clip - Wire | 1 |
| 730 | 299384 | Stack - Carb. | 1 |
| 731 | 391166 | Hood - Snow | 1 |
| 732 | 93490 | Screw - Sem | 1 |

# ENGINE MODEL NO. 190402 TYPE 0754
# BRIGGS & STRATTON

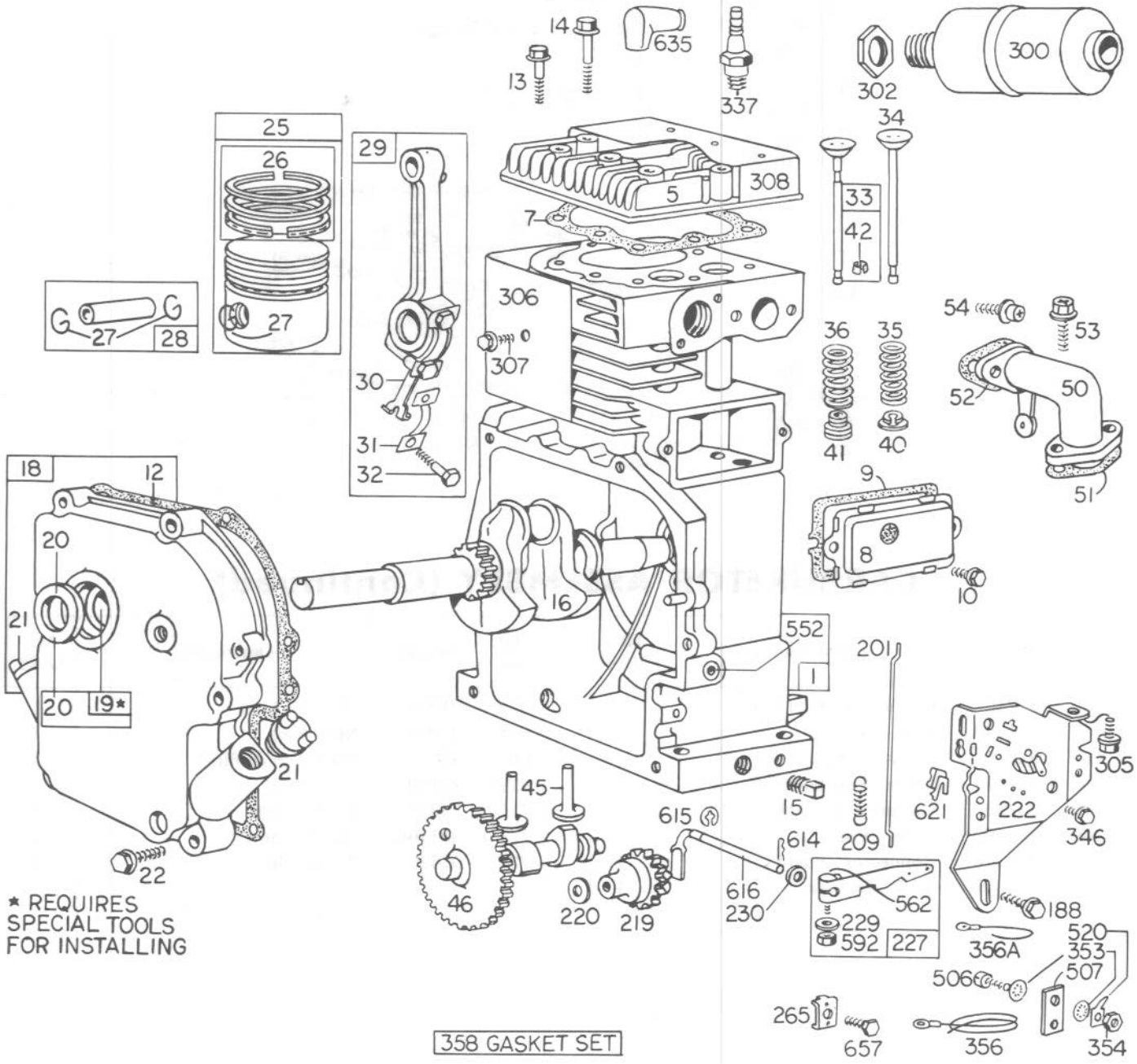

# ENGINE MODEL NO. 190402 TYPE 0754
# BRIGGS & STRATTON

| Ref. No. | Part No. | Description | No. Used |
|---|---|---|---|
| 1 | 390399 | Cylinder Assembly | 1 |
| 5 | 211778 | Head - Cylinder | 1 |
| 7 | *270430 | Gasket - Cylinder Head | 1 |
| 8 | 390321 | Breather Assembly | 1 |
| 9 | *27803 | Gasket - Valve Cover | 1 |
| 10 | 93536 | Screw - Sem | 1 |
| 12 | *27750 | Gasket - Crankcase Cover - 1/64" thick | 1 |
| | *27876 | Gasket - Crankcase Cover - .005" thick | 1 |
| | *27877 | Gasket - Crankcase Cover - .009" thick | 1 |
| 13 | 93210 | Screw - Cylinder Head (2-9/32" long) | 1 |
| 14 | 93211 | Screw - Cylinder Head (2-9/16" long) | 1 |
| 15 | 91084 | Plug - Oil Drain | 1 |
| 16 | 261077 | Crankshaft | 1 |
| 18 | 299167 | Cover Assy. - Crankcase | 1 |
| 19 | 295964 | Bushing - Crankcase Cover<br>Note: Requires special tools for installation. | 1 |
| 20 | 298423 | Seal - Oil | 1 |
| 21 | 66768 | Plug - Oil Filler | 1 |
| 22 | 93585 | Screw - Crankcase Cover Mounting Sem | 1 |
| 25 | 390347 | Piston Assembly - Standard | 1 |
| | 390348 | Piston Assembly - .010" O.S. | 1 |
| | 390349 | Piston Assembly - .020" O.S. | 1 |
| | 390350 | Piston Assembly - .030" O.S. | 1 |
| | | **PISTON RING SETS:**<br>Note: For Chrome Ring Set - Standard Size - order No. 299743. | |
| 26 | 299569 | Ring Set - Piston - Standard<br>Consists of:<br>211637 Ring - Piston, Comp., Top, Standard<br>211636 Ring - Piston, Comp., Center, Standard<br>211635 Ring - Piston, Oil, Std. | 1 |
| | 299570 | Ring Set - Piston - .010" O.S.<br>Consists of:<br>211649 Ring - Piston, Comp., Top, .010" O.S.<br>211650 Ring - Piston, Comp., Center, .010" O.S.<br>211651 Ring - Piston, Oil, .010" O.S. | 1 |
| | 299571 | Ring Set - Piston - .020" O.S.<br>Consists of:<br>211653 Ring - Piston, Comp., Top, .020" O.S.<br>211654 Ring - Piston, Comp., Center, .020" O.S.<br>211655 Ring - Piston, Oil, .020" O.S. | 1 |
| | 299572 | Ring Set - Piston - .030" O.S.<br>Consists of:<br>211657 Ring - Piston, Comp., Top, .030" O.S.<br>211658 Ring - Piston, Comp., Center, .030" O.S.<br>211659 Ring - Piston, Oil, .030" O.S. | 1 |
| 27 | 68546 | Lock - Piston Pin | 1 |
| 28 | 295840 | Pin Assy. - Piston - Standard | 1 |
| | 295841 | Pin Assy. - Piston - .005" O.S. | 1 |
| 29 | 390401 | Rod Assembly - Connecting<br>Note: For Connecting Rod with .020" undersize Crankpin Bore - Order No. 390773. | 1 |
| 30 | 222113 | Dipper - Connecting Rod | 1 |
| 31 | 222114 | Lock - Conn. Rod Screw | 1 |
| 32 | 92659 | Screw - Connecting Rod | 1 |
| 33 | 390419 | Valve - Exhaust | 1 |
| 34 | 261055 | Valve - Intake | 1 |
| 35 | 65906 | Spring - Intake Valve | 1 |
| 36 | 26828 | Spring - Exhaust Valve | 1 |
| 40 | 221596 | Retainer - Intake Valve | 1 |
| 41 | 292260 | Rotocoil - Exhaust Valve | 1 |
| 42 | 93630 | Retainer - Exhaust Valve Rotocoil | 2 |
| 45 | 260933 | Tappet - Valve | 1 |
| 46 | 210728 | Gear - Cam | 1 |
| 50 | 210705 | Elbow - Intake | 1 |
| 51 | *270684 | Gasket - Intake Elbow | 1 |
| 52 | *27828 | Gasket - Intake Elbow Mtg. | 1 |
| 53 | 93128 | Screw - Carburetor Mounting Sem | 1 |
| 54 | 93208 | Screw - Intake Elbow Mounting Sem | 1 |
| 188 | 93535 | Screw - Sem | 1 |
| 201 | 260872 | Link - Governor | 1 |
| 209 | 260695 | Spring - Governor | 1 |
| 219 | 297656 | Gear - Governor | 1 |
| 220 | 221551 | Washer - Thrust | 1 |
| 222 | 390670 | Plate - Governor Control | 1 |

*Included in Gasket Set - Part No. 299577.

# ENGINE MODEL NO. 190402 TYPE 0754
# BRIGGS & STRATTON (Continued)

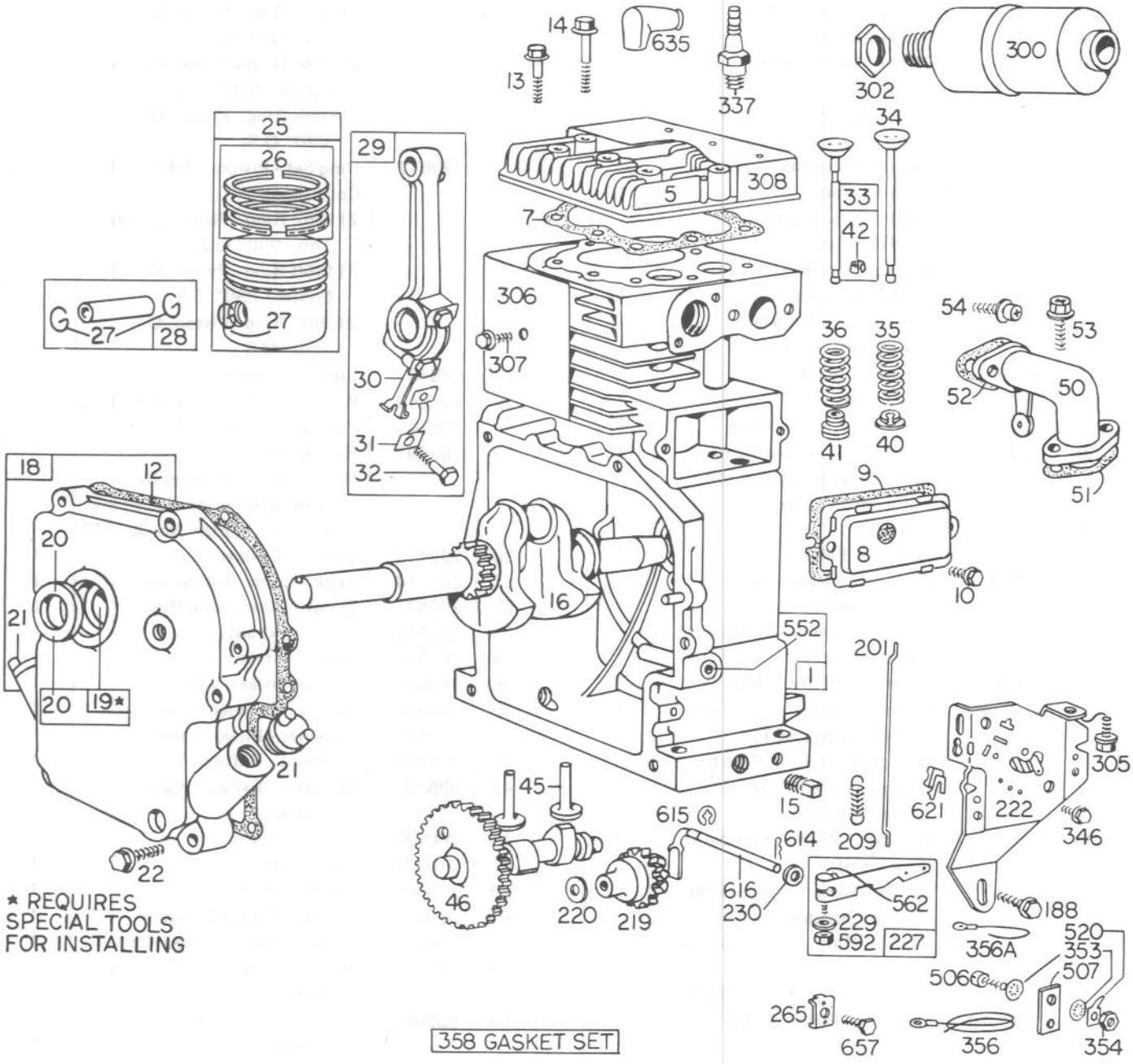

# ENGINE MODEL NO. 190402 TYPE 0754
# BRIGGS & STRATTON (Continued)

| Ref. No. | Part No. | Description | No. Used |
|---|---|---|---|
| 227 | 299165 | Lever Assembly - Governor | 1 |
| 229 | 220680 | Washer | 1 |
| 230 | 221559 | Washer - Spacer | 1 |
| 265 | 221535 | Clamp - Casing | 1 |
| 300 | 390249 | Muffler - Exhaust | 1 |
| 302 | 91242 | Locknut - Muffler | 1 |
| 305 | 93158 | Screw - Sem | 1 |
| 306 | 221898 | Shield - Cylinder | 1 |
| 307 | 93163 | Screw - Cylinder Shield Mounting Sem | 1 |
| 308 | 221901 | Cover - Cylinder Head | 1 |
| 337 | 298809 | Plug - Spark<br>Note: Spark Plugs 298809, use Ignition Cable Terminal No. 221798. | 1 |
| 346 | 93014 | Screw - Sem | 1 |
| 353 | 92791 | Washer - Lock - Shakeproof | 3 |

| Ref. No. | Part No. | Description | No. Used |
|---|---|---|---|
| 354 | 90576 | Nut - Hex. | 1 |
| 356 | 299500 | Wire - Ground | 1 |
| 356A | 391255 | Wire - Ground | 1 |
| 358 | 299577 | Gasket Set | 1 |
| 506 | 90200 | Screw - Machine, Fil. Hd. | 1 |
| 507 | 66895 | Insulator | 1 |
| 520 | 93722 | Terminal - Spade | 1 |
| 552 | 230843 | Bushing - Governor Shaft | 1 |
| 562 | 92613 | Bolt - Governor Lever | 1 |
| 592 | 90356 | Nut - Hex. | 1 |
| 614 | 93306 | Cotter - Hair Pin | 1 |
| 615 | 93307 | Retainer - E-Ring | 1 |
| 616 | 230842 | Crank - Governor | 1 |
| 621 | 297472 | Switch - Stop | 1 |
| 635 | 66538 | Elbow - Spark Plug | 1 |
| 657 | 93496 | Screw - Sem | 1 |

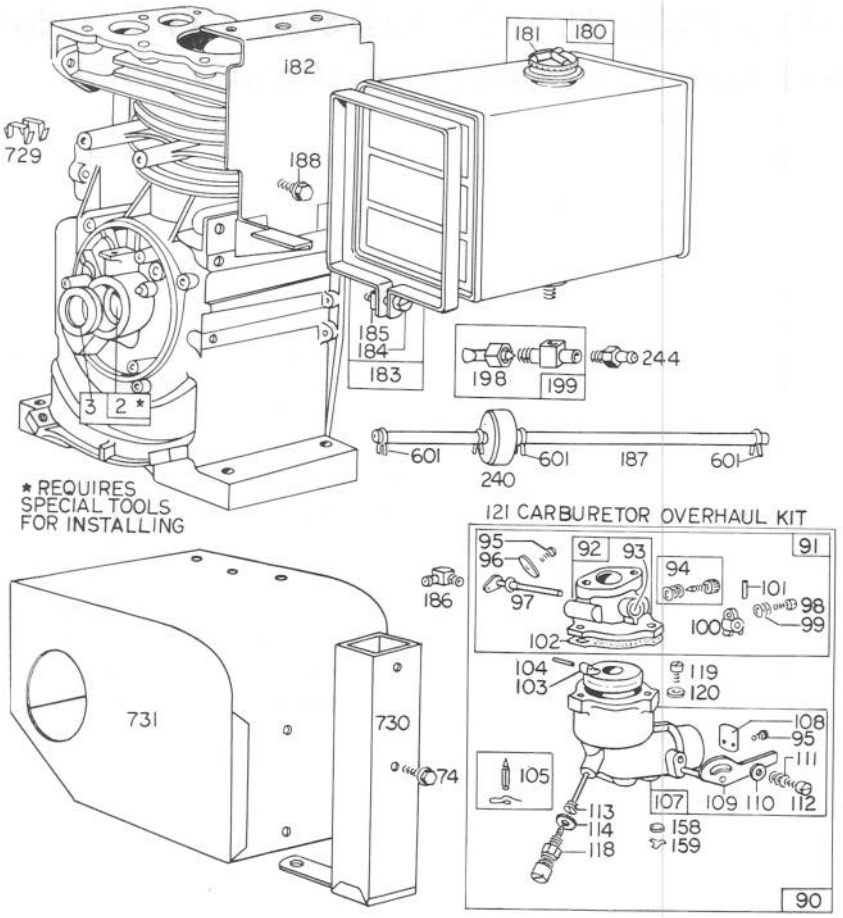


# CARBURETOR ASSEMBLY

| Ref. No. | Part No. | Description | No. Used |
|---|---|---|---|
| 2 | 295962 | Bushing - Cylinder<br>Note: Requires special tools for installation. | 1 |
| 3 | 294606 | Seal - Oil | 1 |
| 90 | 390323 | Carburetor Assembly | 1 |
| 91 | 390404 | Body Assembly - Upper Carburetor | 1 |
| 92 | 390503 | Body - Upper Carburetor | 1 |
| 93 | 23108 | Bushing - Throttle Shaft | 1 |
| 94 | †292681 | Valve Assembly - Carburetor Idle | 1 |
| 95 | 93038 | Screw - Throttle and Choke Valve Mtg. Sem | 1 |
| 96 | 62940 | Valve - Throttle | 1 |
| 97 | 298826 | Shaft and Lever - Throttle | 1 |
| 98 | 91920 | Screw - Machine, Fil. Hd.<br>Note: 90200 Screw - Machine, Fil. Hd. Used for Ground Wire Terminal on type Nos. 0674, 0682. | 1 |
| 99 | 26157 | Spring - Throttle Adjustment | 1 |
| 100 | 61967 | Stop - Throttle | 1 |
| 101 | 93043 | Pin - Throttle Stop | 1 |

| Ref. No. | Part No. | Description | No. Used |
|---|---|---|---|
| 102 | †27918 | Gasket - Carburetor Body | 1 |
| 103 | 99333 | Float - Carburetor | 1 |
| 104 | †230896 | Pin - Float Hinge | 1 |
| 105 | 299096 | Valve - Fuel Inlet | 1 |
| 107 | 390403 | Body Assembly - Lower Carburetor | 1 |
| 108 | 62872 | Valve - Choke | 1 |
| 109 | 298875 | Shaft and Lever - Choke | 1 |
| 110 | 62899 | Washer - Choke Lever | 1 |
| 111 | 26155 | Spring - Choke Lever | 1 |
| 112 | 23123 | Screw - Choke Lever | 1 |
| 113 | †390395 | Nozzle - Carburetor | 1 |
| 114 | †68667 | Gasket - Nozzle | 1 |
| 118 | †99525 | Valve - Needle | 1 |
| 119 | 90746 | Screw - Machine, Fil. Hd. | 1 |
| 120 | 92290 | Washer - Lock | 1 |
| 121 | 295938 | Carburetor Overhaul Kit | 1 |
| 158 | 27590 | Filter - Carburetor Drain | 1 |
| 159 | 220521 | Retainer - Carburetor Drain Filter | 1 |
| 180 | 290816 | Tank Assy. - Fuel | 1 |
| 181 | 297866 | Cap - Fuel Tank | 1 |
| 182 | 221935 | Bracket - Fuel Tank | 1 |

†Included in Carburetor Overhaul Kit - Part No. 295938.

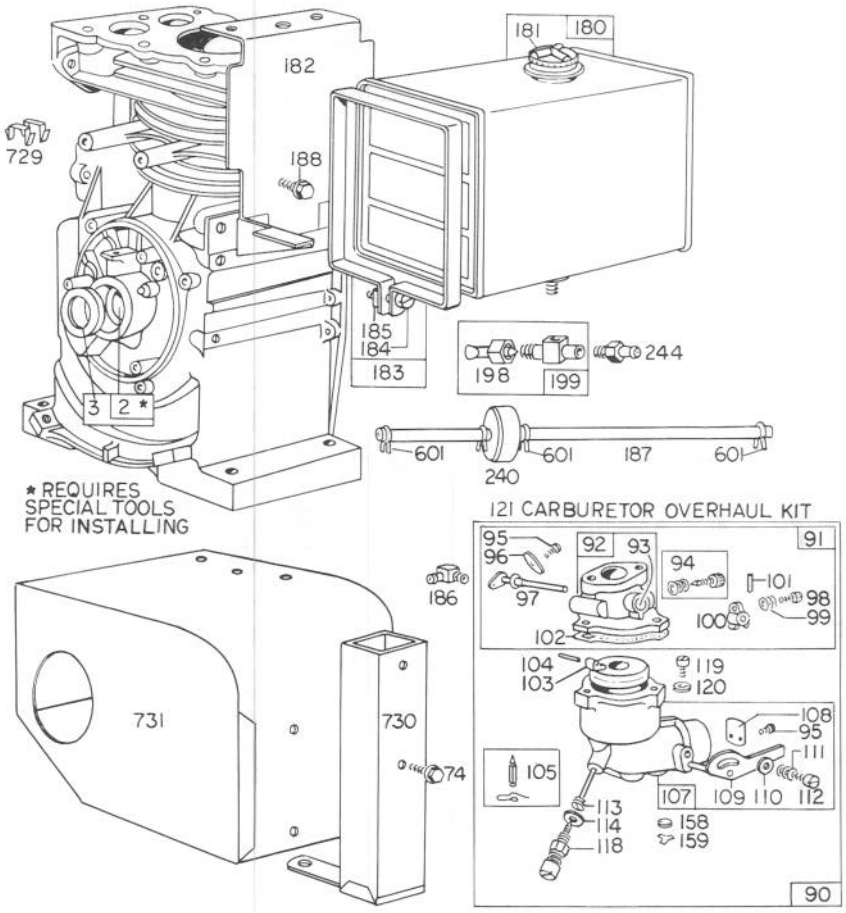


# CARBURETOR ASSEMBLY (Continued)

| Ref. No. | Part No. | Description | No. Used |
|---|---|---|---|
| 183 | 291367 | Strap Assy. - Fuel Tank | 1 |
| 184 | 91257 | Screw - Machine, Fil. Hd. | 1 |
| 185 | 90970 | Nut - Square | 1 |
| 186 | 67218 | Connector - Fuel Pipe | 1 |
| 187 | 299942 | Pipe - Fuel | 1 |
| 188 | 93535 | Screw - Sem | 1 |
| 198 | 293934 | Valve - Fuel Shut-Off | 1 |

| Ref. No. | Part No. | Description | No. Used |
|---|---|---|---|
| 199 | 297563 | Outlet - Fuel Tank | 1 |
| 240 | 298080 | Filter - Fuel | 1 |
| 244 | 230318 | Connector - Fuel Pipe | 1 |
| 601 | 93053 | Clamp - Fuel Pipe | 1 |
| 729 | 221907 | Clip - Wire | 1 |
| 730 | 299384 | Stack - Carb. | 1 |
| 731 | 299391 | Hood - Snow | 1 |

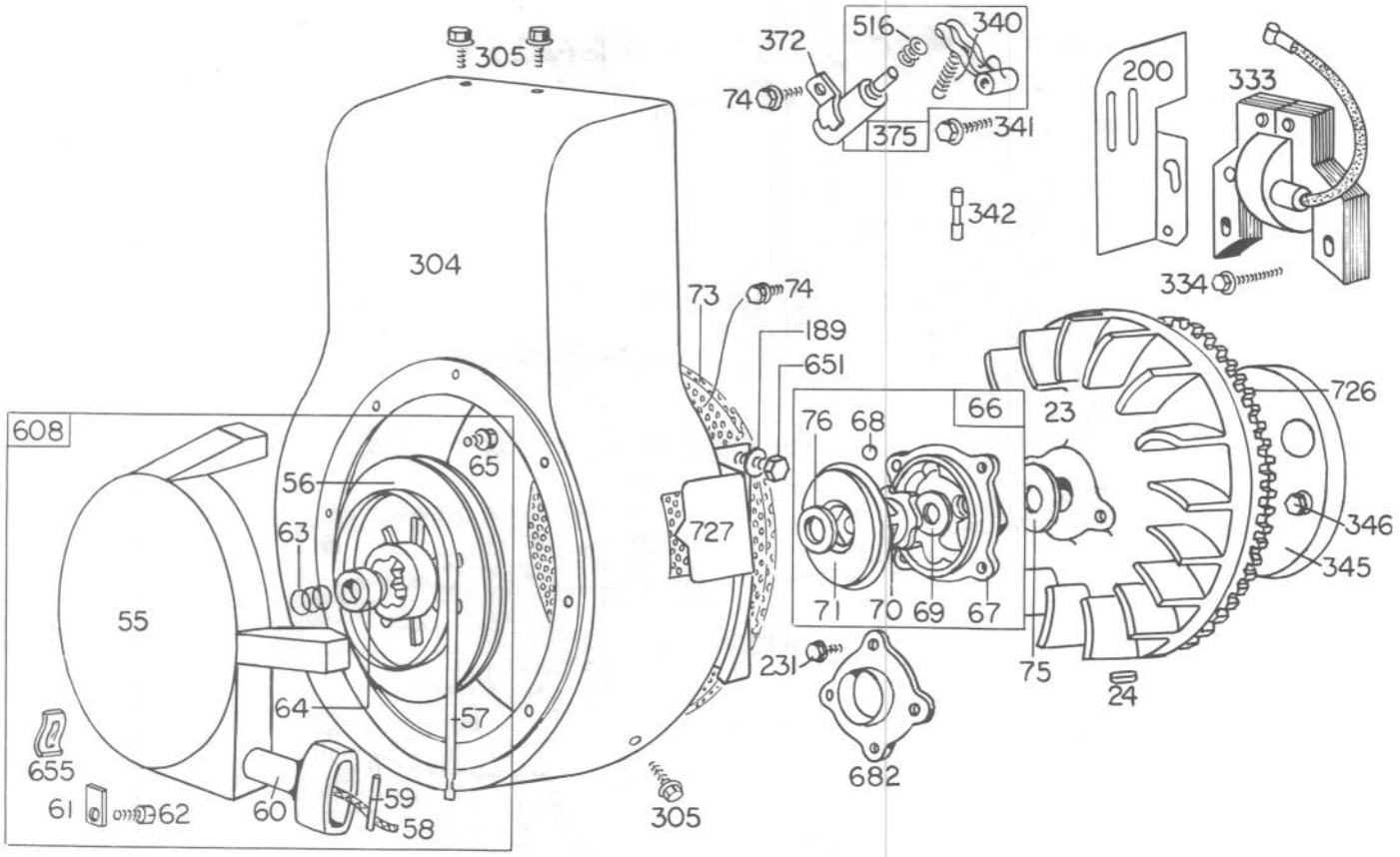


# REWIND STARTER ASSEMBLY for Type 0754 and 0755

| Ref. No. | Part No. | Description | No. Used |
|---|---|---|---|
| 23 | 299375 | Flywheel - Magneto | 1 |
| 24 | 61760 | Key - Flywheel | 1 |
| 55 | 295272 | Housing - Rewind Starter | 1 |
| 56 | 295871 | Pulley - Rewind Starter | 1 |
| 57 | 294303 | Spring - Rewind Starter | 1 |
| 58 | 66564 | Rope - Rewind Starter | 1 |
| 59 | 230228 | Pin - Starter Grip | 1 |
| 60 | 66728 | Grip - Starter Rope | 1 |
| 61 | 68848 | Bumper - Starter Pulley | 1 |
| 62 | 93254 | Screw - Pulley Bumper Mtg. | 1 |
| 63 | 260414 | Spring - Ratchet | 1 |
| 64 | 230543 | Adapter - Ratchet Spring | 1 |
| 65 | 93067 | Screw - Rewind Starter Housing Mounting Sem | 1 |
| 66 | 298798 | Clutch Assy. - Rewind Starter | 1 |
| 67 | 211383 | Housing-Rewind Starter Clutch | 1 |
| 68 | 63770 | Ball - Clutch | 1 |
| 69 | 66718 | Washer-Starter Clutch, Thrust | 1 |
| 70 | 298799 | Ratchet-Rewind Starter Clutch | 1 |
| 71 | 221653 | Washer - Retainer | 1 |
| 73 | 221796 | Screen - Rewind Starter | 1 |
| 74 | 93042 | Screw - Sem | 1 |
| 75 | 220865 | Washer - Spring | 1 |
| 76 | 68238 | Washer - Ratchet Sealing | 1 |
| 189 | 90366 | Washer - Lock | 1 |
| 200 | 221760 | Guide - Air | 1 |

| Ref. No. | Part No. | Description | No. Used |
|---|---|---|---|
| 231 | 93064 | Screw - Sem | 1 |
| 304 | 390516 | Housing - Blower | 1 |
| 305 | 93158 | Screw - Sem | 1 |
| 333 | 298968 | Armature Assembly | 1 |
| 334 | 93381 | Screw - Armature Mtg. Sem | 1 |
| 340 | 26018 | Spring - Breaker Arm | 1 |
| 341 | 93381 | Screw - Breaker Arm Mounting Sem | 1 |
| 342 | 65704 | Plunger - Breaker Point | 1 |
| 345 | 222170 | Cover - Breaker Point | 1 |
| 346 | 93014 | Screw - Sem | 1 |
| 372 | 220477 | Clamp - Condenser | 1 |
| 375 | 294628 | Breaker Points and Condenser Set | 1 |
| | | Note: 299061 Ignition Kit Includes: 294628 Point Set 65704 Plunger 61760 Key - Flywheel | |
| 516 | 260374 | Spring - Connector | 1 |
| 608 | 295001 | Starter Assy. - Rewind | 1 |
| 651 | 92034 | Screw | 1 |
| 655 | 221014 | Anchor - Spring | 1 |
| 682 | 211516 | Shield - Starter Clutch | 1 |
| 726 | 299543 | Gear, Flywheel Ring (Includes Mounting Parts) | 1 |
| 727 | 221940 | Guard - Ring Gear | 1 |

# PRODUCT CHANGES

In an effort to make improvements available to TORO owners as quickly as possible, minor changes are incorporated into Toro's products from time to time that do not become immediately shown in the Parts Catalog. If such a change apparently has been made in your unit, which is not reflected in your manual, see your TORO distributor or his Authorized TORO Service Dealer for information and part numbers.

# IMPORTANT ORDERING INSTRUCTIONS

Repair parts are available from your Authorized TORO Service Dealer. To insure getting correct parts without delay, furnish the following information:

1. Serial number of your snowthrower as shown on the name plate.
2. Part number, description, and quantity of each part required.
3. State whether parts should be shipped by mail or express. All repair parts are shipped F.O.B. Factory.
4. Name and address where parts are to be shipped.
5. Do not order by reference number; use part number only.

# THE TORO PROMISE

It is Toro's policy to design and produce TORO products to provide our customers with a high level of performance and durability in normal operation. Our products, however, are produced in high volume, and it is inevitable that occasionally a unit will reach a customer with a defect in materials or workmanship which causes that unit to fall below the normal high level of TORO performance. Invariably, such a defect will be noticed in a residential product within one year, and in an institutional product within ninety days after purchase. Recognizing this possibility, Toro has established a simple guarantee policy and procedure that is intended to assure customer satisfaction. This guarantee statement is as follows:

## The Toro Promise

*The Toro Company promises to repair any TORO product for the original purchaser if defective in materials or workmanship. The following time periods from the date of purchase apply:*

| | |
|---|---|
| Residential products | 1 year |
| Residential products used commercially | 45 days |
| Institutional products | 90 days |

*The costs of parts and labor are included, but the customer pays the transportation costs. Just return any residential product to an Authorized TORO Service Dealer, or any institutional product to a TORO distributor.*

Should you feel that a product is defective, and wish to rely on The Toro Promise, the following procedure is recommended:

1. Contact any TORO dealer or distributor, but preferably the dealer or distributor from whom you purchased the product.
2. He will instruct you to either return the product to him, or tell you the name and address of your nearest Authorized TORO Service Dealer if the product is to be returned to such dealer.
3. Take the product and your original sales slip, or other evidence of purchase date, to the servicing dealer.
4. The servicing dealer will inspect the unit, advise you whether the product is defective and, if so, make all repairs necessary to correct the defect without extra charge to you.

If for any reason you are dissatisfied with the dealer's analysis of the defect or the service he performs, we urge you to contact us. Write:

TORO "Customer Care" Department
8111 Lyndale Avenue South
Bloomington, Minnesota 55420

# MAINTENANCE RECORD

| Date | Hours Used | Oil Change | Lubrication | Summer Storage | Fall Service | Spark Plug Gap |
|---|---|---|---|---|---|---|
| | | | | | | |
| | | | | | | |
| | | | | | | |