Form No. 3443-757 Rev A

TORO®

Count on it.

Operator's Manual

Reelmaster® 3100-D Traction Unit

Model No. 03170—Serial No. 403430001 and Up

Model No. 03171—Serial No. 403430001 and Up

Register at www.Toro.com.
Original Instructions (EN)

CE

3443-757

This product complies with all relevant European directives. For details, please see the separate product specific Declaration of Conformity (DOC) sheet.

It is a violation of California Public Resource Code Section 4442 or 4443 to use or operate the engine on any forest-covered, brush-covered, or grass-covered land unless the engine is equipped with a spark arrester, as defined in Section 4442, maintained in effective working order or the engine is constructed, equipped, and maintained for the prevention of fire.

The enclosed engine owner's manual is supplied for information regarding the US Environmental Protection Agency (EPA) and the California Emission Control Regulation of emission systems, maintenance, and warranty. Replacements may be ordered through the engine manufacturer.

⚠ WARNING

CALIFORNIA
Proposition 65 Warning

Diesel engine exhaust and some of its constituents are known to the State of California to cause cancer, birth defects, and other reproductive harm.

Battery posts, terminals, and related accessories contain lead and lead compounds, chemicals known to the State of California to cause cancer and reproductive harm. Wash hands after handling.

Use of this product may cause exposure to chemicals known to the State of California to cause cancer, birth defects, or other reproductive harm.

Introduction

This machine is a ride-on, reel-blade lawn mower intended to be used by professional, hired operators in commercial applications. It is primarily designed for cutting grass on well-maintained turf. Using this product for purposes other than its intended use could prove dangerous to you and bystanders.

Read this information carefully to learn how to operate and maintain your product properly and to avoid injury and product damage. You are responsible for operating the product properly and safely.

Visit www.Toro.com for more information, including safety tips, training materials, accessory information, help finding a dealer, or to register your product.

Whenever you need service, genuine Toro parts, or additional information, contact an Authorized Service Dealer or Toro Customer Service and have the model and serial numbers of your product ready. Figure 1 identifies the location of the model and serial numbers on the product. Write the numbers in the space provided.

Important: **With your mobile device, you can scan the QR code on the serial number plate (if equipped) to access warranty, parts, and other product information.**

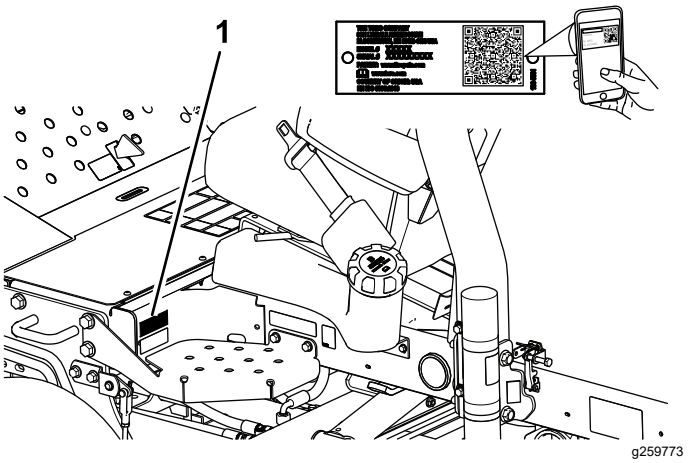

Figure 1

1. Model and serial number location

Model No. _____

Serial No. _____

This manual identifies potential hazards and has safety messages identified by the safety-alert symbol (Figure 2), which signals a hazard that may cause serious injury or death if you do not follow the recommended precautions.



Figure 2
Safety-alert symbol

This manual uses 2 words to highlight information. **Important** calls attention to special mechanical information and **Note** emphasizes general information worthy of special attention.

© 2021—The Toro® Company
8111 Lyndale Avenue South
Bloomington, MN 55420

Contact us at www.Toro.com.
Printed in the USA
All Rights Reserved

Contents

Safety 4
General Safety 4
Safety and Instructional Decals 4
Setup 11
1 Installing the Wheels 12
2 Installing the Steering Wheel 12
3 Charging and Connecting the Battery 13
4 Checking the Angle Indicator 14
5 Adjusting Tire Air Pressure 14
6 Installing the Hood Latch (CE Only) 14
7 Installing the Exhaust Guard (CE Only) 16
8 Installing the Roll Bar 16
9 Installing the Front Lift Arms 17
10 Installing the Carrier Frames to the Cutting Units 18
11 Mounting the Cutting Units 19
12 Mounting the Cutting Unit Drive Motors 20
13 Adjusting the Lift Arms 21
14 Installing the Tipper Roller Kit (Optional) 22
15 Applying the CE Decals 22
Product Overview 23
Controls 23
Specifications 25
Attachments/Accessories 25
Before Operation 26
Before Operation Safety 26
Performing Daily Maintenance 26
Checking the Interlock System 26
Filling the Fuel Tank 26
During Operation 27
During Operation Safety 27
Starting the Engine 29
Shutting Off the Engine 29
Bleeding the Fuel System 29
Cutting Grass with the Machine 29
Clip Rate (Reel Speed) 30
Adjusting Reel Speed 31
Operating Tips 31
After Operation 32
After Operation Safety 32
After Mowing 32
Identifying the Tie-Down Points 32
Hauling the Machine 32
Towing the Machine 32
Maintenance 33
Maintenance Safety 33
Recommended Maintenance Schedule(s) 33
Daily Maintenance Checklist 35
Pre-Maintenance Procedures 36
Removing the Battery Cover 36
Opening the Hood 36
Lubrication 37
Greasing the Bearings And Bushings 37
Checking the Sealed Bearings 39
Engine Maintenance 40
Engine Safety 40
Servicing the Air Cleaner 40
Checking the Engine-Oil Level 40
Changing the Engine Oil and the Filter 41
Fuel System Maintenance 42
Servicing the Fuel Tank 42
Inspecting the Fuel Lines and Connections 42
Draining the Water Separator 42
Changing the Fuel Filter Canister 43
Bleeding Air from the Injectors 43
Electrical System Maintenance 44
Electrical System Safety 44
Servicing the Battery 44
Servicing the Fuses 44
Drive System Maintenance 45
Checking the Tire Pressure 45
Torquing the Wheel Nuts 45
Adjusting the Traction Drive for Neutral 45
Cooling System Maintenance 46
Cooling System Safety 46
Checking the Cooling System 46
Cleaning the Engine Cooling System 46
Brake Maintenance 47
Adjusting the Parking Brake 47
Belt Maintenance 48
Servicing the Engine Belts 48
Controls System Maintenance 49
Adjusting the Throttle 49
Hydraulic System Maintenance 49
Hydraulic System Safety 49
Checking the Hydraulic Lines and Hoses 49
Checking the Level of the Hydraulic Fluid 49
Hydraulic Fluid Specifications 50
Hydraulic Fluid Capacity 50
Changing the Hydraulic Fluid 50
Replacing the Hydraulic Filter 51
Cutting Unit System Maintenance 52
Blade Safety 52
Checking the Reel-to-Bedknife Contact 52
Backlapping the Cutting Units 52
Cleaning 54
Washing the Machine 54
Storage 54
Storage Safety 54
Preparing the Traction Unit 54
Preparing the Engine 54
Troubleshooting 56
Using the Standard Control Module (SCM) 56

Safety

This machine has been designed in accordance with EN ISO 5395 (when you complete the setup procedures) and ANSI B71.4-2017.

General Safety

This product is capable of amputating hands and feet and of throwing objects.

- Read and understand the contents of this *Operator's Manual* before starting the engine.
- Use your full attention while operating the machine. Do not engage in any activity that causes distractions; otherwise, injury or property damage may occur.
- Do not put your hands or feet near moving components of the machine.
- Do not operate the machine without all guards and other safety protective devices in place and functioning properly on the machine.
- Keep bystanders and children out of the operating area. Never allow children to operate the machine.
- Shut off the engine, remove the key, and wait for all movement to stop before you leave the operator's position. Allow the machine to cool before adjusting, servicing, cleaning, or storing it.

Improperly using or maintaining this machine can result in injury. To reduce the potential for injury, comply with these safety instructions and always pay attention to the safety-alert symbol ⚠, which means Caution, Warning, or Danger—personal safety instruction. Failure to comply with these instructions may result in personal injury or death.

Safety and Instructional Decals

Safety decals and instructions are easily visible to the operator and are located near any area of potential danger. Replace any decal that is damaged or missing.

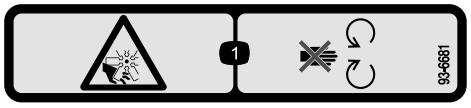

decal93-6681

93-6681

1. Cutting/dismemberment hazard, fan—stay away from moving parts.

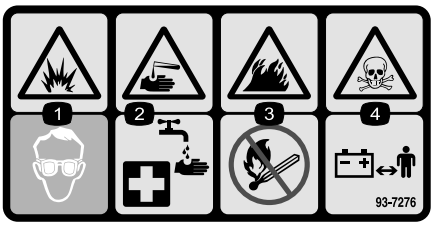

decal93-7276

93-7276

1. Explosion hazard—wear eye protection.
2. Caustic liquid/chemical burn hazard—to perform first aid, flush with water.
3. Fire hazard—no fire, open flames, or smoking.
4. Poison hazard—keep children away from the battery.

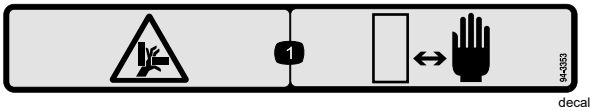

decal94-3353

94-3353

1. Crushing hazard of hand—keep hands away.

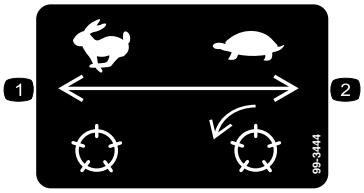

decal99-3444

99-3444

1. Transport speed—fast
2. Mowing speed—slow

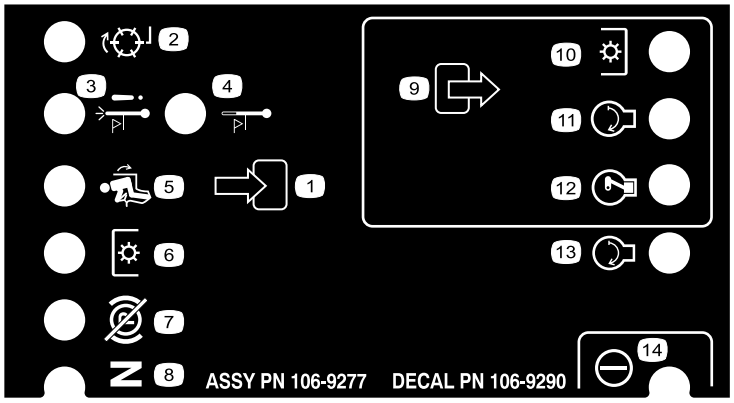

decal106-9290

106-9290

1. Inputs
2. Reels—active
3. High temperature shutdown
4. High temperature warning
5. In seat
6. PTO
7. Parking brake—Off
8. Neutral
9. Outputs
10. PTO
11. Engine—Start
12. Engine—Run
13. Engine—Start
14. Power

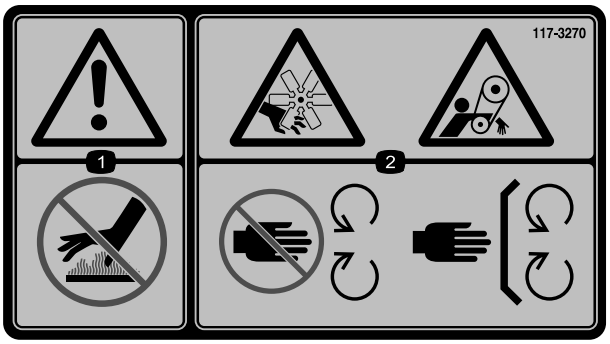

decal117-3270

117-3270

1. Warning—do not touch the hot surface.
2. Cutting/dismemberment hazard, hand; entanglement hazard, belt—stay away from moving parts, keep all guards and shields in place.

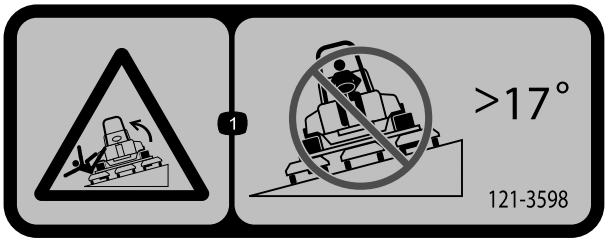

decal121-3598

121-3598

Note: This machine complies with the industry standard stability test in the static lateral and longitudinal tests with the maximum recommended slope indicated on the decal. Review the instructions for operating the machine on slopes in the *Operator's Manual* as well as the conditions in which you would operate the machine to determine whether you can operate the machine in the conditions on that day and at that site. Changes in the terrain can result in a change in slope operation for the machine. If possible, keep the cutting units lowered to the ground while operating the machine on slopes. Raising the cutting units while operating on slopes can cause the machine to become unstable.

1. Tipping hazard—do not drive across slopes greater than 17°.

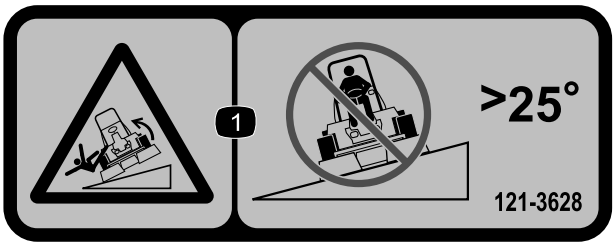

decal121-3628

121-3628

Note: This machine complies with the industry standard stability test in the static lateral and longitudinal tests with the maximum recommended slope indicated on the decal. Review the instructions for operating the machine on slopes in the *Operator's Manual* as well as the conditions in which you would operate the machine to determine whether you can operate the machine in the conditions on that day and at that site. Changes in the terrain can result in a change in slope operation for the machine. If possible, keep the cutting units lowered to the ground while operating the machine on slopes. Raising the cutting units while operating on slopes can cause the machine to become unstable.

1. Tipping hazard—do not drive across slopes greater than 25°.



decal133-8062

133-8062

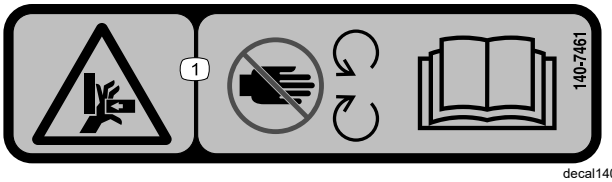

decal140-7461

140-7461

1. Crushing hazard of hands—stay away from moving parts; read the *Operator's Manual*.



decalbatterysymbols

Battery Symbols

Some or all of these symbols are on your battery.

1. Explosion hazard
2. No fire, open flame, or smoking
3. Caustic liquid/chemical burn hazard
4. Wear eye protection.
5. Read the *Operator's Manual*.
6. Keep bystanders away from the battery.
7. Wear eye protection; explosive gases can cause blindness and other injuries.
8. Battery acid can cause blindness or severe burns.
9. Flush eyes immediately with water and get medical help fast.
10. Contains lead; do not discard

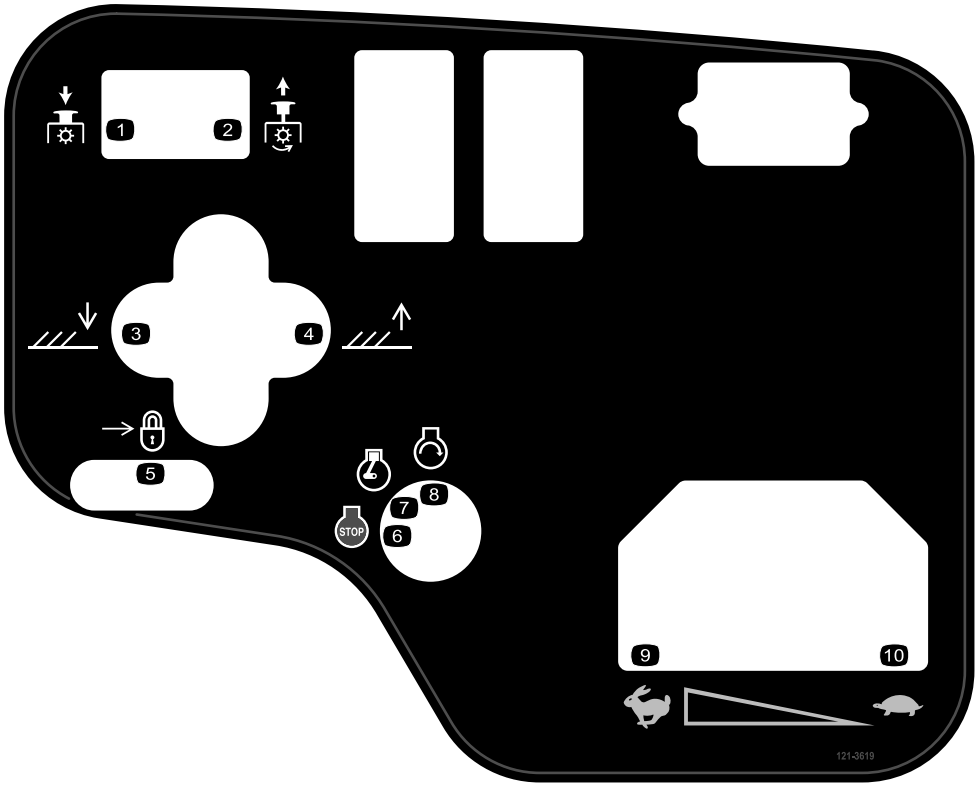

decal121-3619

121-3619

1. PTO—Disengage
2. PTO—Engage
3. Lower the cutting units.
4. Raise the cutting units.
5. Lock
6. Engine—Shut off
7. Engine—Run
8. Engine—Start
9. Fast
10. Slow

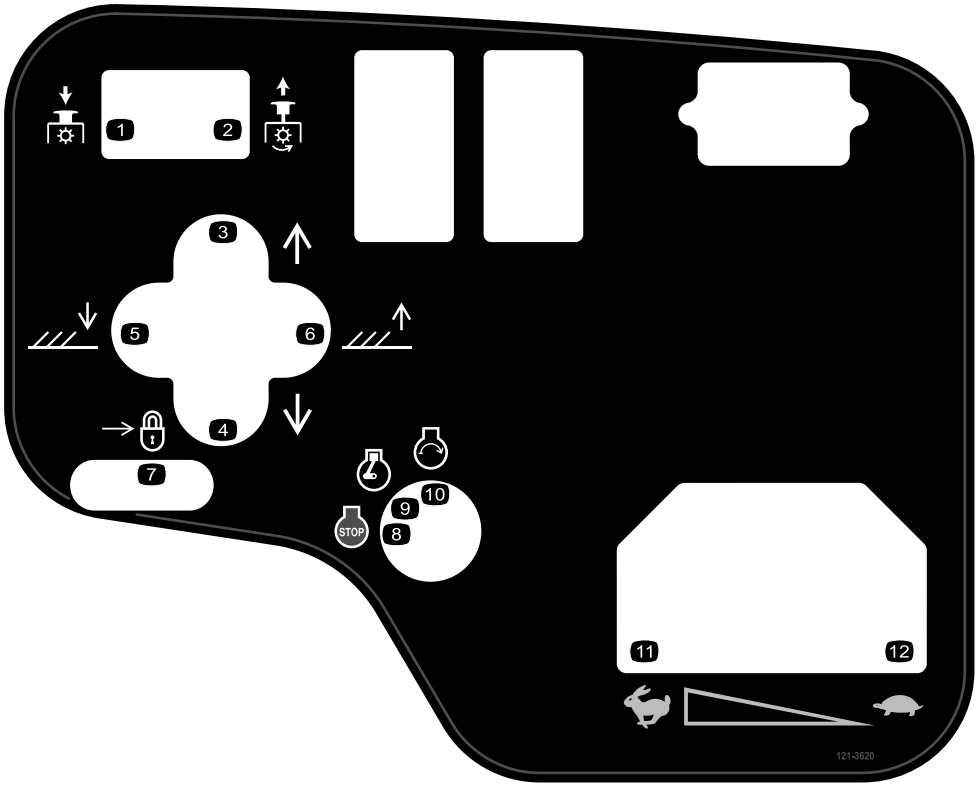

decal121-3620

121-3620

1. PTO—Disengage
2. PTO—Engage
3. Move the cutting units right.
4. Move the cutting units left.
5. Lower the cutting units.
6. Raise the cutting units.
7. Lock
8. Engine—Shut off
9. Engine—Run
10. Engine—Start
11. Fast
12. Slow

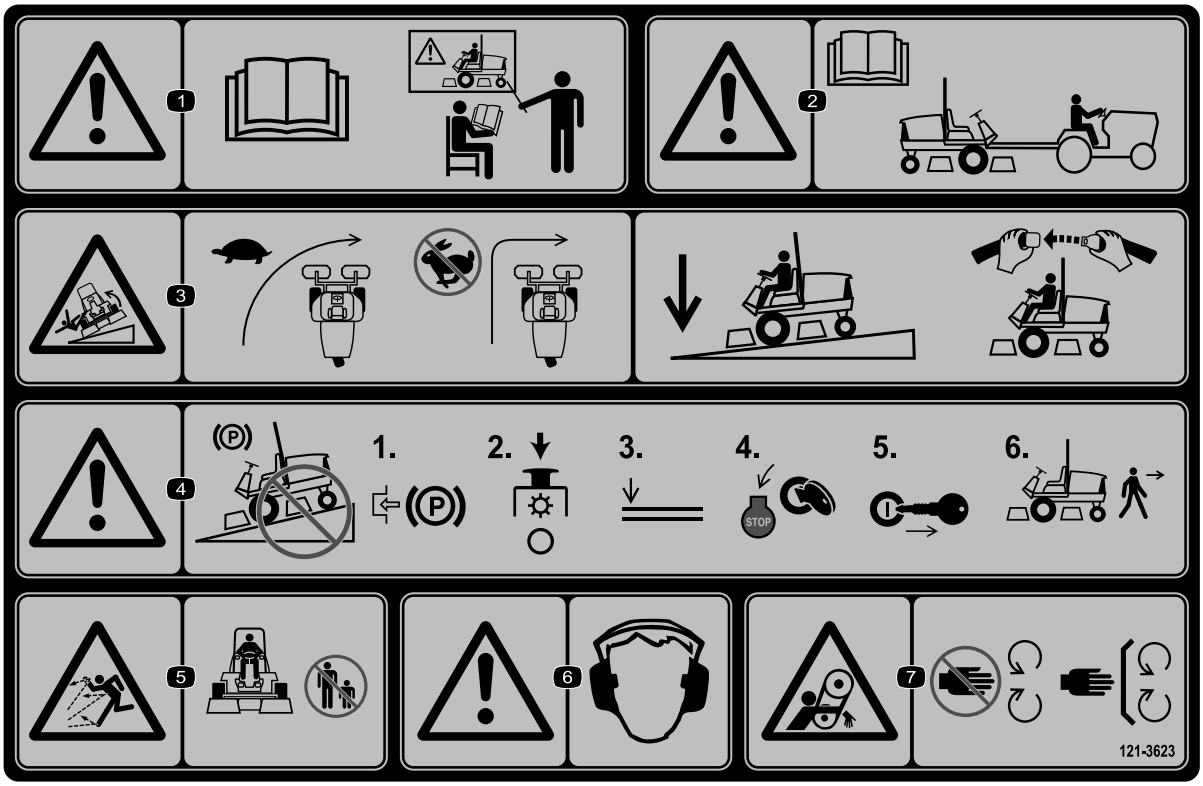

decal121-3623

121-3623

1. Warning—read the *Operator's Manual*; do not operate the machine unless you have received training.
2. Warning—read the *Operator's Manual* before towing the machine.
3. Tipping hazard—slow the machine before turning; when driving on slopes, keep the cutting units lowered and your seatbelt fastened.
4. Warning—do not park on slopes; engage the parking brake, stop the cutting units, lower the attachments, shut off the engine, and remove the key from the ignition before leaving the machine.
5. Thrown object hazard—keep bystanders away.
6. Warning—wear hearing protection.
7. Entanglement hazard—keep away from moving parts; keep all guards and shields in place.

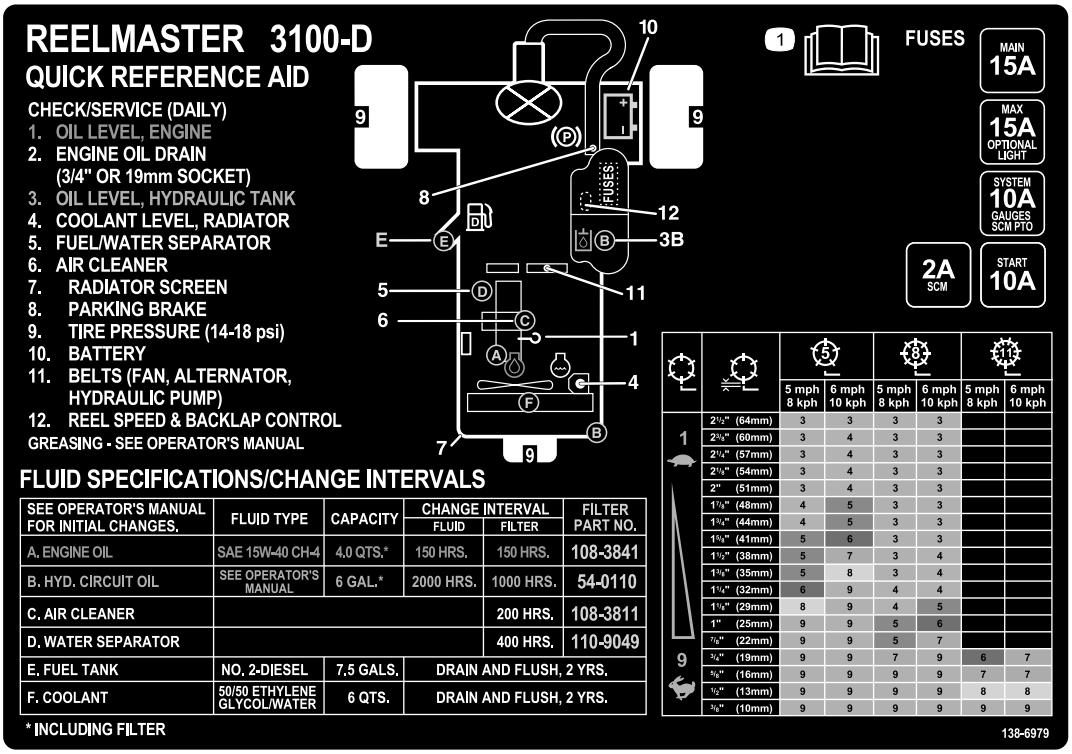

decal138-6979

138-6979

1. Read the *Operator's Manual*.

Setup

Loose Parts

Use the chart below to verify that all parts have been shipped.

Procedure	Description	Qty.	Use
1	Front wheel assembly Rear wheel assembly	2 1	Install the wheels.
2	Steering wheel Steering-wheel cap Large washer Jam nut Screw	1 1 1 1 1	Install the steering wheel.
3	Electrolyte	–	Activate, charge, and connect the battery.
4	Inclinometer	1	Check the angle indicator.
5	No parts required	–	Adjust the tire air pressure.
6	Lock bracket Rivet Washer Screw (1/4 x 2 inches) Locknut (1/4 inch)	1 2 1 1 1	Install the hood latch (CE).
7	Exhaust guard Self-tapping screw	1 4	Install the exhaust guard (CE).
8	Roll-bar assembly Flange-head bolts Locknuts Hose clamp	1 4 4 1	Install the roll bar.
9	Lift arms Pivot rod Bolt (5/16 x 7/8 inch)	2 2 2	Install the front lift arms. (Parts are supplied in the Lift Arm Kit.)
10	No parts required	–	Install the carrier frames to the cutting units.
11	No parts required	–	Mount the cutting units.
12	No parts required	–	Mount the cutting unit drive motors.
13	No parts required	–	Adjust the lift arms.
14	Tipper roller kit (not included)	1	Install the optional tipper roller kit.
15	Warning decal (121-3598) CE decal Production year decal	1 1 1	Apply the CE decals.

Media and Additional Parts

Description	Qty.	Use
Ignition key	2	Start the engine.
Operator's Manual Engine operator's manual	1 1	Read before operating the machine.
Operator training material	1	View before operating the machine.
Pre-delivery checklist	1	Check to ensure that the machine has been properly set up.
Certificate of compliance	1	Ensure CE compliance.

Note: Determine the left and right sides of the machine from the normal operating position.

1

Installing the Wheels

Parts needed for this procedure:

2	Front wheel assembly
1	Rear wheel assembly

Procedure

Important: **The rim and tire of the rear wheel is narrower than that of the front 2 rims and tires.**

1. Mount a wheel assembly onto the wheel hub with the valve stem aligned outward.
2. Secure the wheel to the hub with the lug nuts, and torque the nuts in a crossing pattern to 61 to 88 N·m (45 to 65 ft-lb).
3. Repeat steps 1 and 2 for the other wheel assemblies.

2

Installing the Steering Wheel

Parts needed for this procedure:

1	Steering wheel
1	Steering-wheel cap
1	Large washer
1	Jam nut
1	Screw

Procedure

1. Slide the steering wheel onto the steering shaft (Figure 3).

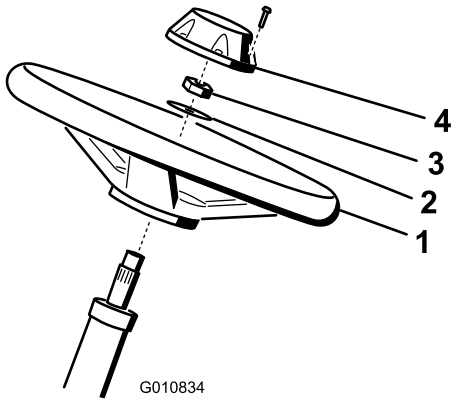

g010834

Figure 3

1. Steering wheel
2. Washer
3. Jam nut
4. Cap

2. Slide the washer onto the steering shaft (Figure 3).

3. Secure the steering wheel to the shaft with a jam nut and tighten it to 27 to 35 N·m (20 to 26 ft-lb) (Figure 3).
4. Install the cap to the steering wheel and secure it with a screw (Figure 3).

3

Charging and Connecting the Battery

Parts needed for this procedure:

–	Electrolyte

Procedure

⚠ DANGER

Battery electrolyte contains sulfuric acid, which is lethal if consumed and causes severe burns.

- **Do not drink electrolyte and avoid contact with skin, eyes, or clothing. Wear safety glasses to shield your eyes and rubber gloves to protect your hands.**
- **Fill the battery where clean water is always available for flushing the skin.**

1. Remove the 2 knobs that secure the battery cover to the machine, and remove the cover (Figure 4).

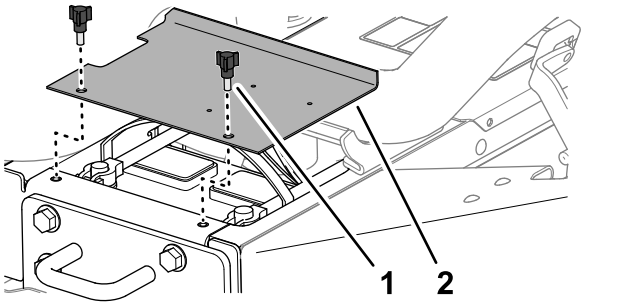

Figure 4

1. Knob
2. Battery cover

2. Charge the battery at a rate of 3 to 4 A for 4 to 8 hours.

⚠ WARNING

Charging the battery produces gasses that can explode.

- **Keep sparks and flames away from battery.**
- **Never smoke near the battery.**

3. When the battery is charged, disconnect the charger from the electrical outlet and battery posts.
4. Install the positive cable (red) to the positive (+) battery terminal, and secure them with T-bolt and nut (Figure 5).

Note: Ensure that the positive (+) terminal is all the way onto the post and the cable is positioned snug to the battery.

Important: **The cable must not contact the battery cover.**

5. Install the negative cable (black) to the negative (–) battery terminal of the battery, and secure them with T-bolt and nut (Figure 5).

⚠ WARNING

Incorrect battery cable routing could damage the tractor and cables causing sparks. Sparks can cause the battery gasses to explode, resulting in personal injury.

- **Always disconnect the negative (black) battery cable before disconnecting the positive (red) cable.**
- **Always connect the positive (red) battery cable before connecting the negative (black) cable.**

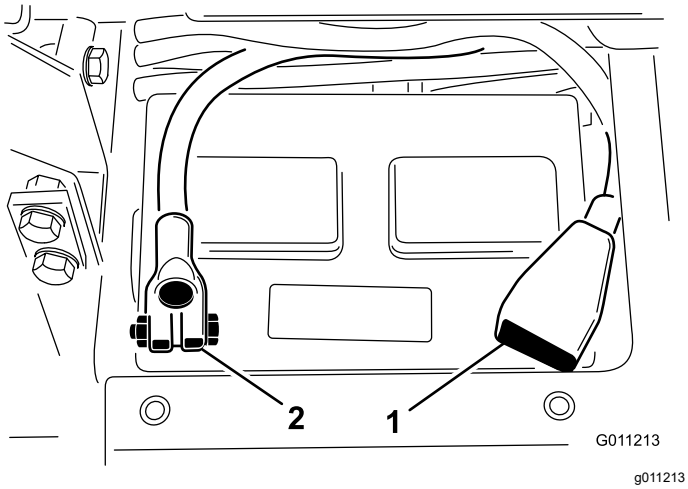

Figure 5

1. Positive (+) battery cable
2. Negative (–) battery cable

Important: **If you ever remove the battery, ensure that the battery clamp bolts are installed with the bolt heads positioned on the bottom side and the nuts on the top side. If the clamp bolts are reversed, they may interfere with the hydraulic tubes when you shift the cutting units.**

6. Coat both battery connections with Grafo 112X skin-over grease (Toro Part No. 505-47) or light grease to prevent corrosion.
7. Slide the rubber boot over the positive terminal to prevent a possible short from occurring.
8. Install the battery cover.

4

Checking the Angle Indicator

Parts needed for this procedure:

1	Inclinometer

Procedure

1. Park the machine on a flat, level surface.
2. Verify that the machine is level by placing a handheld inclinometer (supplied with the machine) on the frame cross rail, by the fuel tank (Figure 6). The inclinometer should read zero degrees when viewed from the operator's position.

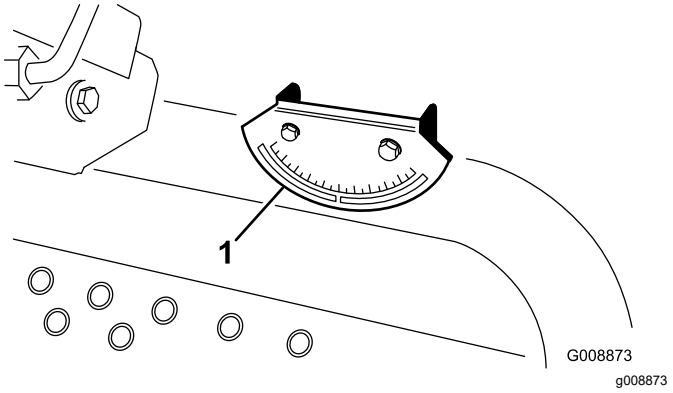

Figure 6

1. Angle indicator

3. If the inclinometer does not read zero degrees, move the machine to a location where a zero degree reading is attained. The angle indicator, mounted on the machine, should now read zero degrees as well.
4. If the angle indicator does not read zero degrees, loosen the 2 screws and nuts securing the angle indicator to the mounting bracket, adjust the indicator to attain a zero degree reading, and tighten the bolts.

5

Adjusting Tire Air Pressure

No Parts Required

Procedure

Adjust the tire air pressure at each of the tires; refer to Checking the Tire Pressure (page 45).

Note: The tires are over-inflated for shipping.

6

Installing the Hood Latch (CE Only)

Parts needed for this procedure:

1	Lock bracket
2	Rivet
1	Washer
1	Screw (1/4 x 2 inches)
1	Locknut (1/4 inch)

Procedure

1. Unhook the hood latch from the hood-latch bracket.
2. Remove the rivets (2) securing the hood-latch bracket to the hood (Figure 7). Remove the hood-latch bracket from the hood.

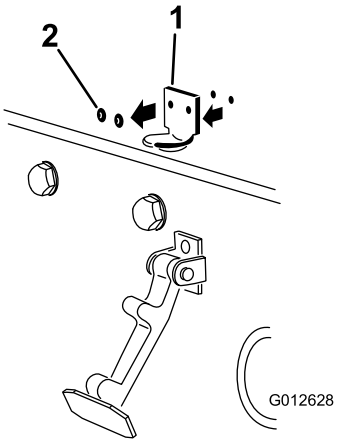

g012628

Figure 7

1. Hood-latch bracket
2. Rivets

3. While aligning the mounting holes, position the CE lock bracket and the hood-latch bracket onto the hood. The lock bracket must be against the hood (Figure 8). Do not remove the bolt and nut assembly from the lock bracket arm.

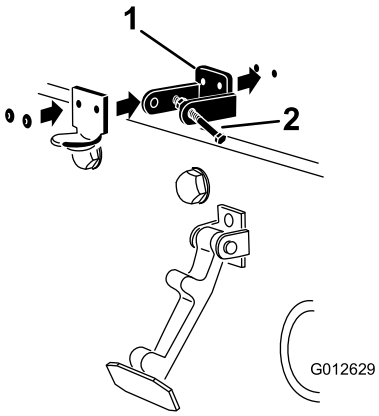

g012629

Figure 8

1. CE lock bracket
2. Bolt and nut assembly

4. Align the washers with the holes on the inside of the hood.
5. Rivet the brackets and the washers to the hood (Figure 8).
6. Hook the latch onto the hood-latch bracket (Figure 9).

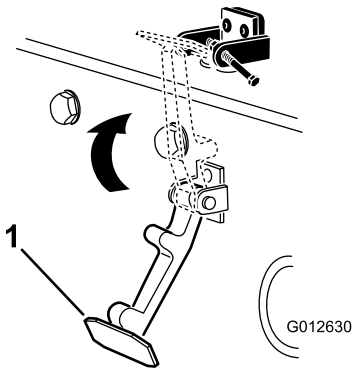

g012630

Figure 9

1. Hood latch

7. Screw the bolt into the other arm of hood-lock bracket to lock the latch in position (Figure 10).

   Note: Tighten the bolt securely but do not tighten the nut.

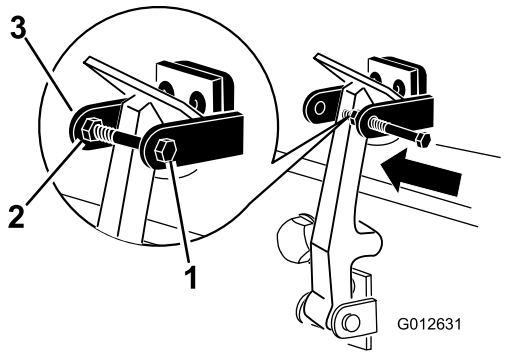

g012631

Figure 10

1. Bolt
2. Nut
3. Arm of hood-lock bracket

7

Installing the Exhaust Guard (CE Only)

Parts needed for this procedure:

1	Exhaust guard
4	Self-tapping screw

Procedure

1. Position the exhaust guard around the muffler while aligning the mounting holes with the holes in the frame (Figure 11).

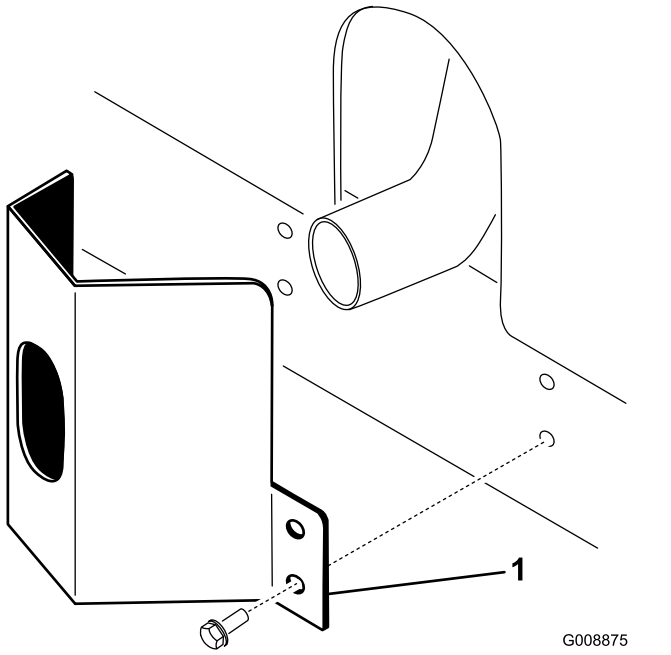

g008875

Figure 11

1. Exhaust guard

2. Secure the exhaust guard to the frame with 4 self-tapping screws (Figure 11).

8

Installing the Roll Bar

Parts needed for this procedure:

1	Roll-bar assembly
4	Flange-head bolts
4	Locknuts
1	Hose clamp

Procedure

Important: **Never weld or modify a rollover protection system (ROPS). Replace a damaged ROPS; do not repair or revise it.**

1. Lower the roll bar onto the traction unit mounting brackets, aligning the mounting holes. Ensure that the vent tube on the roll bar is on the left side of the machine (Figure 12).

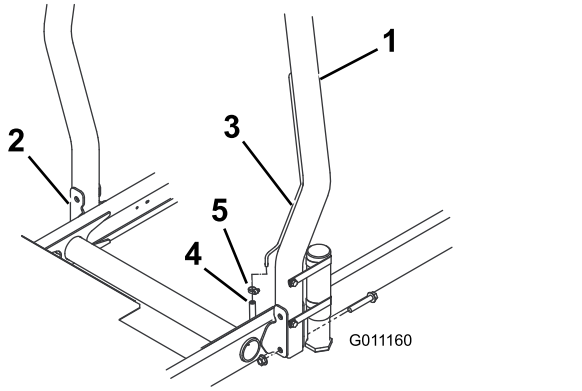

Figure 12

1. Roll bar
2. Mounting bracket
3. Vent tube
4. Fuel line vent tube hose
5. Hose clamp

2. Secure each side of the roll bar to the mounting brackets with 2 flange head bolts and locknuts (Figure 12). Torque the fasteners to 81 N·m (60 ft-lb).
3. Secure the fuel line vent hose to the vent tube on the roll bar with the hose clamp.

⚠ CAUTION

Starting the engine with the fuel line vent hose disconnected from the vent tube will cause fuel to flow from the hose, increasing the risk of fire or explosion. A fire or explosion from fuel can burn you and others and can cause property damage.

Connect the fuel line vent hose to the vent tube prior to starting the engine.

9

Installing the Front Lift Arms

Parts needed for this procedure:

2	Lift arms
2	Pivot rod
2	Bolt (5/16 x 7/8 inch)

Procedure

1. Remove the 2 bolts that secure the lift arm pivot shaft link to the lift arm pivot shafts, and remove and retain the pivot shaft link and bolts (Figure 13).

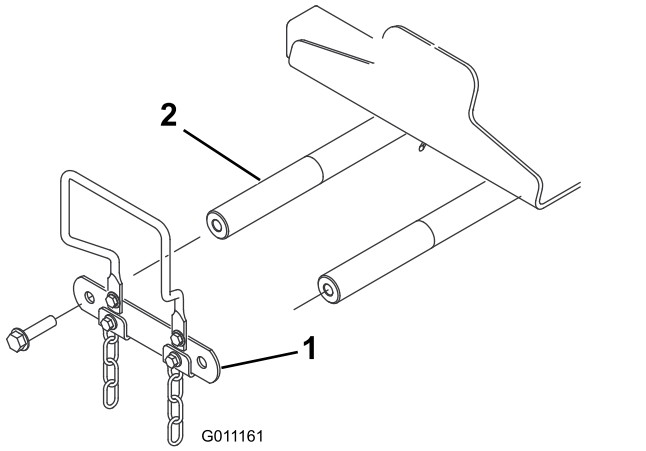

Figure 13

1. Lift arm pivot shaft link
2. Lift arm pivot shaft

2. Insert a pivot rod into each lift arm and align the mounting holes (Figure 14).

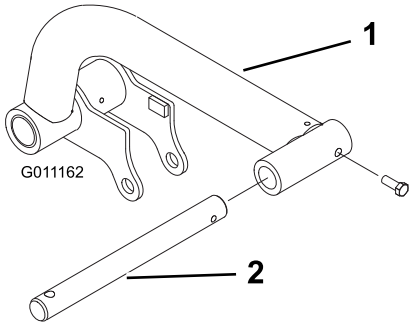

Figure 14

1. Lift arm
2. Pivot rod

3. Secure the pivot rods to the lift arms with 2 bolts (5/16 x 7/8 inch).
4. Insert the lift arms onto the lift arm pivot shafts (Figure 15), and secure each with a lift arm pivot shaft link and bolts previously removed.

   Note: Torque the bolts to 95 N·m (70 ft-lb).

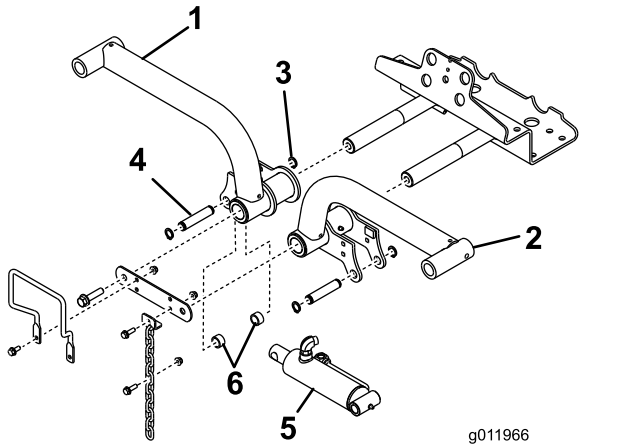

Figure 15

1. Lift arm, right
2. Retaining ring
3. Lift arm, left
4. Lift cylinder
5. Spacers (2)
6. Mounting pin

5. Remove the rear retaining rings securing the mounting pins to each end of the lift cylinder.
6. Secure the right end of the lift cylinder to the right lift arm with a pin and 2 spacers (Figure 15). Secure it with a retaining ring.
7. Secure the left end of the lift cylinder to the left lift arm with a pin. Secure it with a retaining ring.

10

Installing the Carrier Frames to the Cutting Units

No Parts Required

Procedure

1. Remove the cutting units from the cartons. Adjust them as described in the cutting unit operator's manual.
2. Position a front carrier frame (Figure 16) onto each front cutting unit.

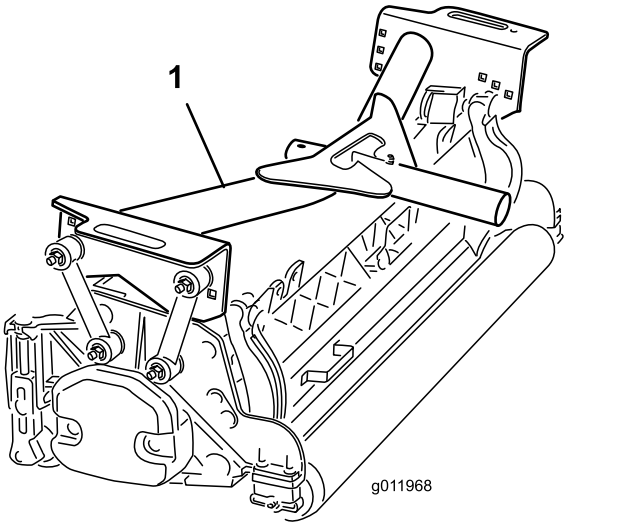

Figure 16

1. Front carrier frame

3. Secure the mounting links to the **front** carrier frames as follows:
   - Secure the front mounting links to the middle carrier frame holes with a bolt (3/8 x 2-1/4 inch), 2 flat washers, and a locknut, as shown in Figure 17. Position a washer on each side of the link when mounting. Torque the fasteners to 42 N·m (31 ft-lb).
   - Secure the rear mounting links to the middle carrier frame holes with a bolt (3/8 x 2-1/4 inch), 2 flat washers, and a locknut, as shown in Figure 17. Position a washer on each side of the link when mounting. Torque the fasteners to 42 N·m (31 ft-lb).

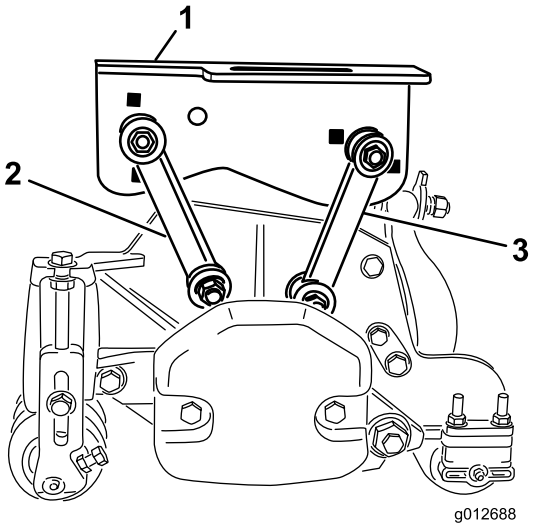

Figure 17

1. Front carrier frame
2. Front mounting link
3. Rear mounting link

4. Position the rear carrier frame (Figure 18) onto the rear cutting unit.

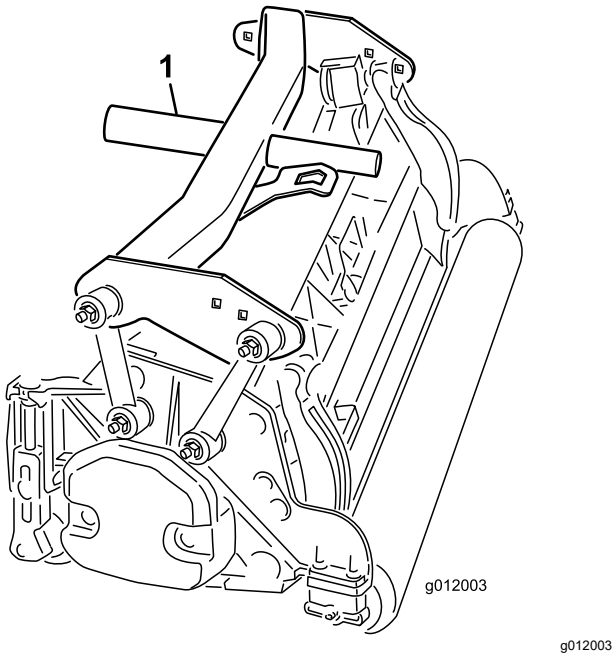

g012003

Figure 18

1. Rear carrier frame

5. Secure the mounting links to the **rear** carrier frame as follows:
   - Secure the front mounting links to the carrier frame holes with a bolt (3/8 x 2-1/4 inch), 2 flat washers, and a locknut, as shown in Figure 19. Position a washer on each side of the link when mounting. Torque the fasteners to 42 N·m (31 ft-lb).
   - Secure the rear mounting links to the rear carrier frame holes with a bolt (3/8 x 2-1/4 inch), 2 flat washers, and a locknut, as shown in Figure 19. Position a washer on each side of the link when mounting. Torque the fasteners to 42 N·m (31 ft-lb).

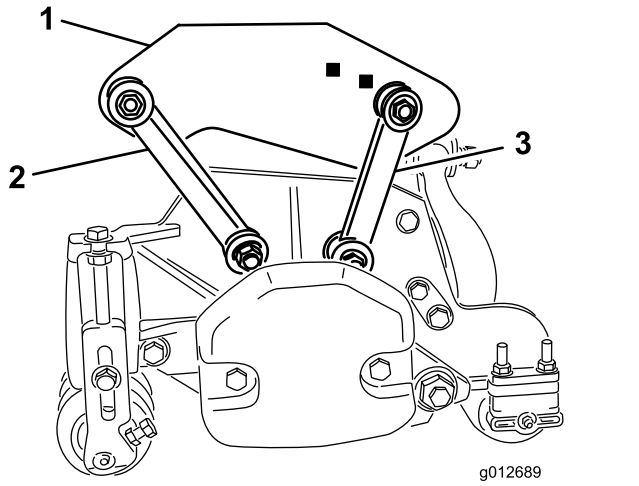

g012689

Figure 19

1. Rear carrier frame
2. Front mounting link
3. Rear mounting link

11

Mounting the Cutting Units

No Parts Required

Procedure

1. Slide a thrust washer onto each front lift arm pivot rod.
2. Slide the cutting unit carrier frame onto the pivot rod and secure it with a lynch pin (Figure 20).

   Note: On rear cutting unit, position the thrust washer between the rear of the carrier frame and the lynch pin.

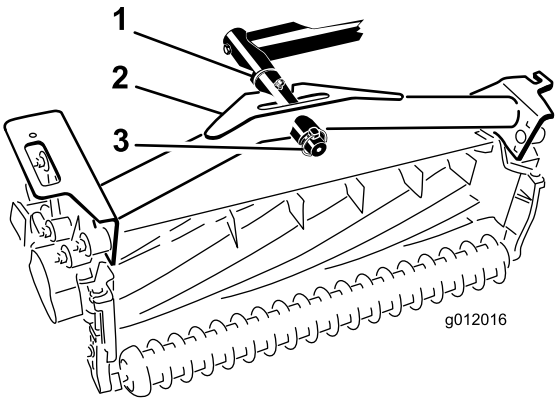

g012016

Figure 20

1. Thrust washer
2. Carrier frame
3. Lynch pin

3. Grease all the lift arm and carrier frame pivot points.

   Important: **Ensure that the hoses are free of twists or sharp bends and that the rear cutting unit hoses are routed as show in (Figure 21). Raise the cutting units and shift them to the left (Model 03171). The rear cutting unit hoses must not contact traction cable bracket. Reposition the fittings and/or hoses, if necessary.**

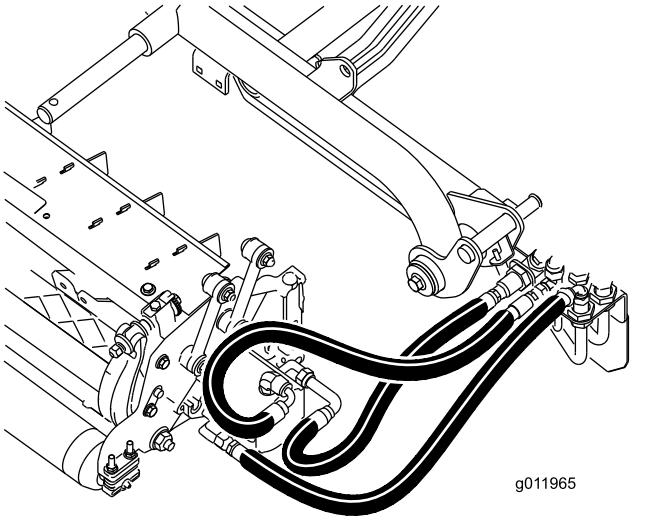

g011965

Figure 21

4. Route a tipper chain up through the slot on the end of each carrier frame. Secure the tipper chain to the top of the carrier frame with a bolt, a washer, and a locknut (Figure 22).

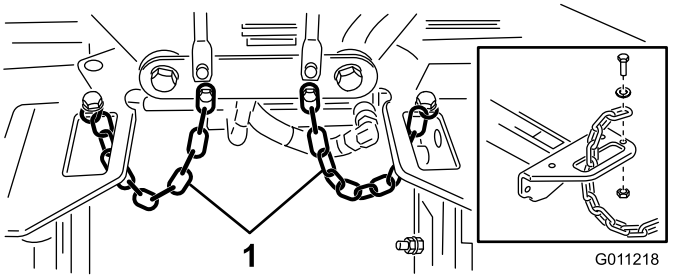

g011218

Figure 22

1. Tipper chain

12

Mounting the Cutting Unit Drive Motors

No Parts Required

Procedure

1. Position the cutting units in front of the lift arm pivot rods.
2. Remove the weight and O-ring (Figure 23) from the inside end of the right cutting unit.

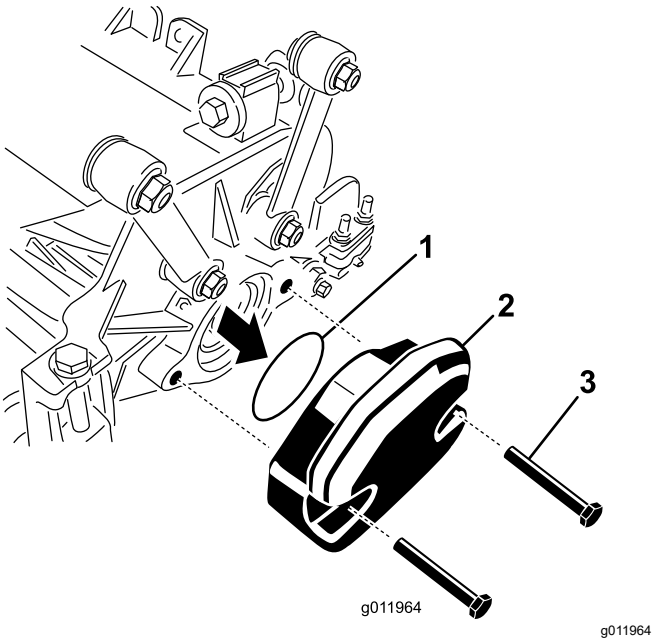

g011964

Figure 23

1. O-ring
2. Weight
3. Mounting bolts

3. Remove the plug from the bearing housing on the outside end of the right cutting unit and install the weights and gasket.
4. Remove the shipping plug from the bearing housings on the remaining cutting units.
5. Insert the O-ring (supplied with the cutting unit) on the flange of the drive motor (Figure 24).

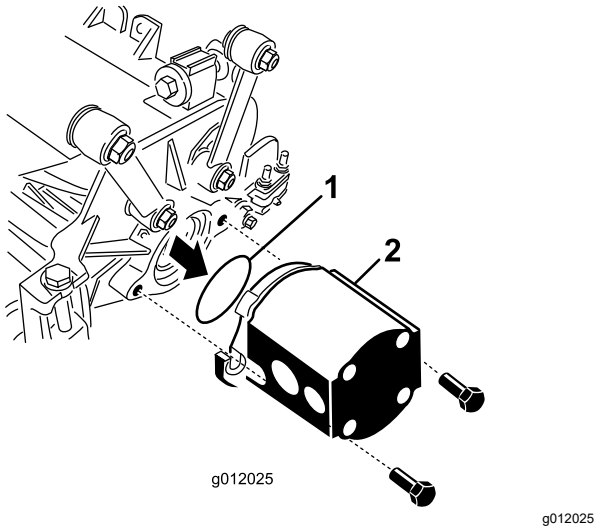

Figure 24

1. O-ring
2. Reel motor

6. Mount the motor to the drive end of the cutting unit, and secure it with 2 cap screws provided with cutting unit (Figure 24).

13

Adjusting the Lift Arms

No Parts Required

Procedure

1. Start the engine, raise the lift arms, and check to ensure that the clearance between each lift arm and the floor plate bracket is 5 to 8 mm (0.18 to 0.32 inches) (Figure 25).

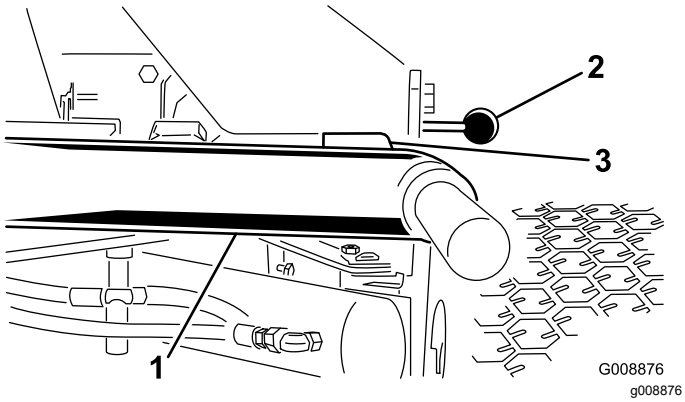

Figure 25

Cutting units removed for clarity

1. Lift arm
2. Floor plate bracket
3. Clearance

Note: If the clearance is not in this range, adjust the cylinder as follows:

A. Back off the stop bolts and adjust the cylinder to attain the clearance (Figure 26).

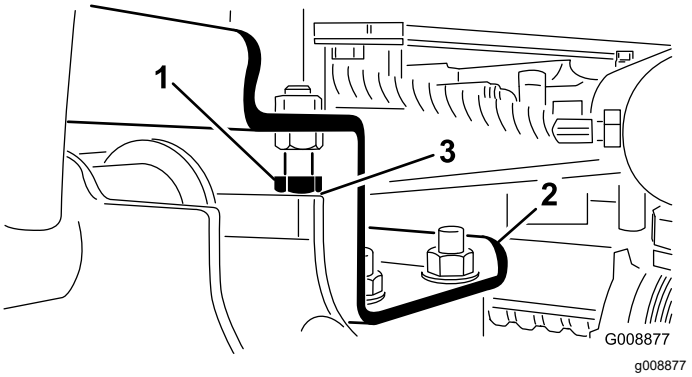

Figure 26

1. Stop bolt
2. Lift arm
3. Clearance

B. Back off the jam nut on the cylinder (Figure 27).

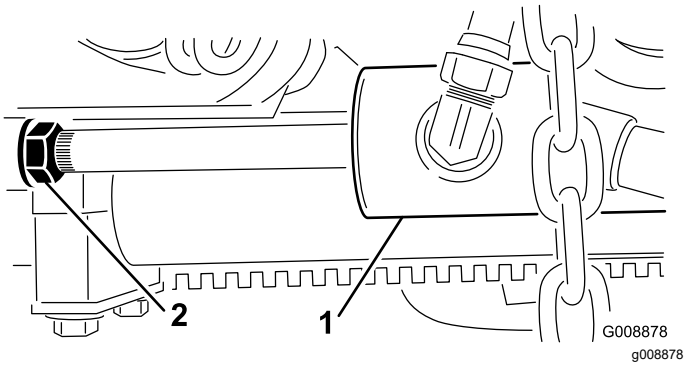

Figure 27

1. Front cylinder
2. Jam nut

C. Remove the pin from the rod end and rotate the clevis.

D. Install the pin and check the clearance.

E. Repeat steps A through D if necessary.

F. Tighten the clevis jam nut.

Note: If the rear lift arm clunks during transport, reduce the clearance.

2. Check to ensure that the clearance between each lift arm and stop bolt is 0.13 to 1.02 mm (0.005 to 0.040 inches) (Figure 26).

Note: If the clearance is not in this range, adjust the stop bolts to attain clearance.

3. Start the engine, raise the lift arms, and check to ensure that the clearance between the wear strap on the top of the rear cutting unit wear bar and the bumper strap is 0.51 to 2.54 mm (0.02 to 0.10 inches) as shown in Figure 28.

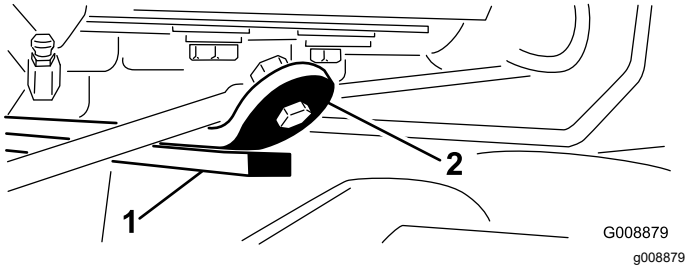

Figure 28

1. Wear bar
2. Bumper strap

If the clearance is not in this range, adjust the rear cylinder as follows:

A. Lower the cutting units and back off the jam nut on the cylinder (Figure 29).

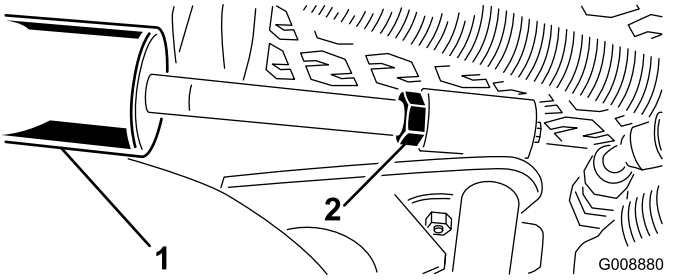

Figure 29

1. Rear cylinder
2. Adjusting nut

B. Grasp the cylinder rod close to the nut with a pliers and rag and rotate the rod.

C. Raise the cutting units and check the clearance.

D. Repeat steps A through C if necessary.

E. Tighten the clevis jam nut.

Important: **Lack of clearance at the front stops or the rear wear bar could damage the lift arms.**

14

Installing the Tipper Roller Kit (Optional)

Parts needed for this procedure:

1	Tipper roller kit (not included)

Procedure

When cutting in higher heights of cut, install the Tipper Roller Kit.

1. Raise the cutting units all the way up.
2. Locate the frame bracket above the center cutting unit (Figure 30).
3. While pressing down on the front roller of the center cutting unit, determine which holes on the tipper bracket align with the frame bracket holes to attain the same roller contact when the tipper bracket is installed (Figure 30).

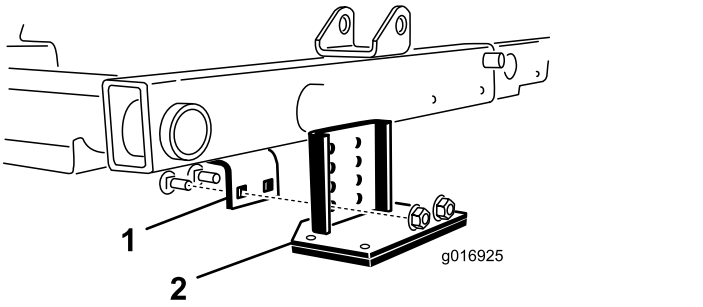

Figure 30

1. Frame bracket
2. Tipper bracket

4. Lower the cutting units and mount the tipper bracket to the frame with the 2 carriage bolts and 2 nuts supplied with the kit (Figure 30).

15

Applying the CE Decals

Parts needed for this procedure:

1	Warning decal (121-3598)
1	CE decal
1	Production year decal

Procedure

On machines requiring CE compliance, apply the production year decal (Part No. 133-5615) near the serial plate, the CE decal (Part No. 93-7252) near the hood lock, and the CE warning decal (Part No. 121-3598) over the standard warning decal (Part No. 121-3628).

Product Overview

Controls

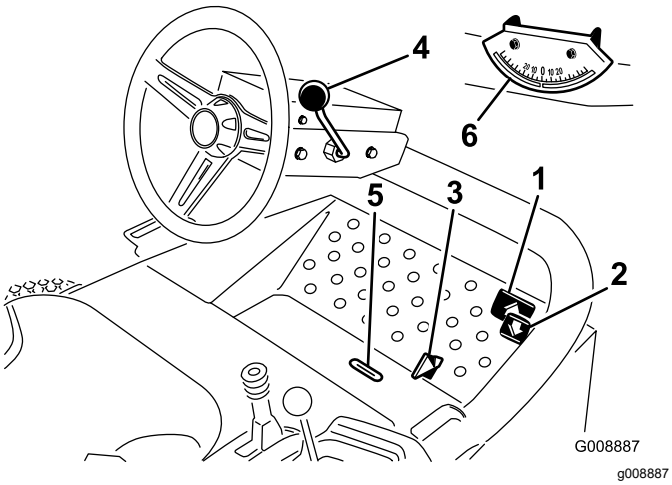

Figure 31

1. Forward traction pedal
2. Reverse traction pedal
3. Mow/transport slide
4. Tilt steering lever
5. Indicator slot
6. Angle indicator

Traction Pedals

Press the traction forward pedal (Figure 31) to move forward. Press the traction reverse pedal (Figure 31) to move backward or to assist in stopping when moving forward. Also, allow the pedal to move or move it to the NEUTRAL position to stop the machine.

Mow/Transport Slide

Using your heel, move the mow/transport slide (Figure 31) to the left to transport and to the right to mow. **The cutting units operate only in the mow position.**

Important: **The mow speed is set at the factory to 9.7 km/h (6 mph). It can be increased or decreased by adjusting the speed stop screw (Figure 32).**

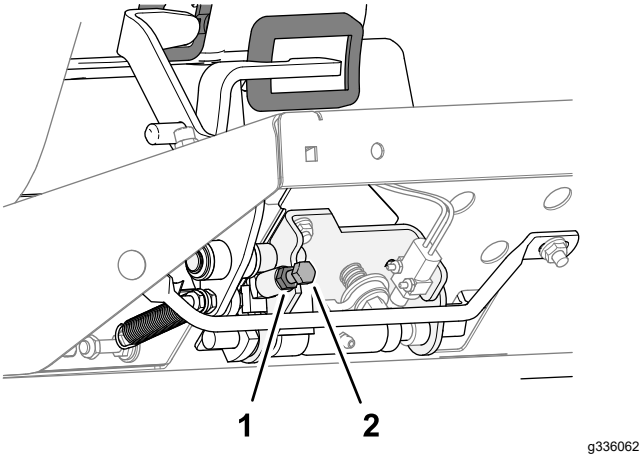

Figure 32

1. Jam nut
2. Speed stop screw

Tilt Steering Lever

Pull the tilt steering lever (Figure 31) back to adjust the steering wheel to the desired position, then push the lever forward to tighten.

Indicator Slot

The slot in the operator platform (Figure 31) indicates when the cutting units are in the center position.

Angle Indicator

The angle indicator (Figure 31) indicates the side hill angle of the machine in degrees.

Ignition Switch

The ignition switch (Figure 33), which is used to start, shut off, and preheat the engine, has 3 positions: OFF, ON/PREHEAT, and START. Rotate the key to the ON/PREHEAT position until the glow plug indicator light goes out (approximately 7 seconds); then rotate the key to the START position to engage the starter motor. Release the key when the engine starts. The key automatically moves to the ON/RUN position. To shut off the engine, rotate the key to the OFF position and remove the key from the switch to prevent accidental starting.

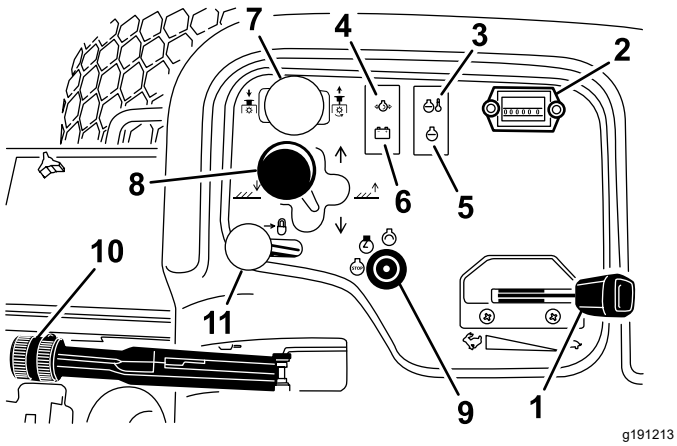

Figure 33

1. Throttle
2. Hour meter
3. Temperature light
4. Oil-pressure light
5. Glow-plug indicator light
6. Alternator light
7. Cutting-unit drive switch
8. Cutting-unit shift lever
9. Ignition switch
10. Parking brake
11. Lift lever lock

Throttle

Move the throttle (Figure 33) forward to increase the engine speed and rearward to decrease the engine speed.

Cutting Unit Drive Switch

The cutting unit drive switch (Figure 33) has 2 positions: ENGAGE and DISENGAGE. The rocker switch operates a solenoid valve on the valve bank to drive the cutting units.

Hour Meter

The hour meter (Figure 33) indicates the total hours of machine operation. The hour meter starts to function whenever the key switch is on.

Cutting Unit Shift Lever

To lower the cutting units to the ground, move the cutting unit shift lever (Figure 33) forward. The cutting units do not drop unless the engine is running, and they do not operate in the raised position. To raise the cutting units, pull the shift lever rearward to the RAISE position.

Move the lever to the right or left to move the cutting units in the same direction. This should only be done when the cutting units are raised or if they are on the ground and the machine is moving (Model 03171 only).

Note: The lever does not have to be held in the forward position while the cutting units are lowered.

⚠ DANGER

Shifting the cutting units downhill decreases machine stability. This could cause a rollover, which may result in personal injury or death.

Shift the cutting units uphill while on a side hill.

Engine Coolant Temperature Warning Light

The temperature warning light (Figure 33) glows if the engine coolant temperature is high. If you do not stop the traction unit and the coolant temperature rises another 5.5°C (10°F), the engine shuts off.

Oil Pressure Warning Light

The oil pressure warning light (Figure 33) glows if the engine oil pressure drops below a safe level.

Alternator Light

The alternator light (Figure 33) should be off when the engine is running. If it is on, check and repair the charging system as needed.

Glow Plug Indicator

The glow plug indicator light (Figure 33) glows when the glow plugs are operating.

Parking Brake

Whenever the engine is shut off, engage the parking brake (Figure 33) to prevent accidental movement of the machine. To engage the parking brake, pull up on the lever. The engine stops if you press the traction pedal with the parking brake engaged.

Lift Lever Lock

Move the lift lever lock (Figure 33) rearward to prevent the cutting units from dropping.

Reel Speed Control

The reel speed control is located under the console cover (Figure 34). To attain the desired clip rate (reel speed), rotate the reel speed control knob to the appropriate height-of-cut setting and mower speed. Refer to Clip Rate (Reel Speed) (page 30).

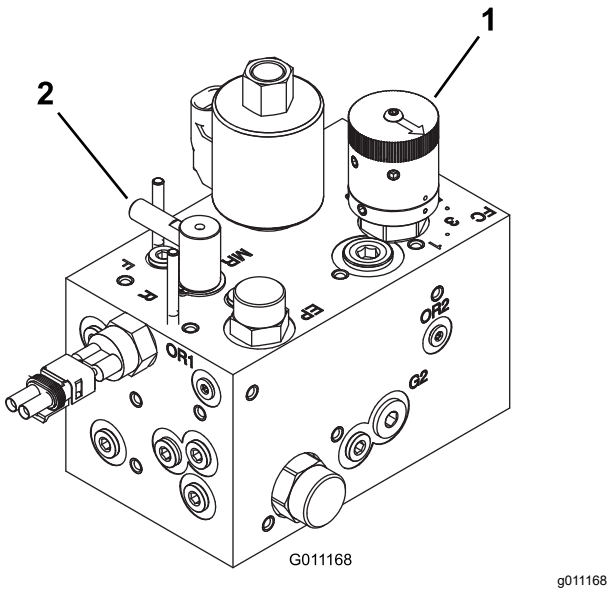

Figure 34

1. Reel speed control
2. Backlap control

Backlap Control

The backlap control is located under the console cover (Figure 34). Rotate the knob to R for backlapping and to F for mowing. Do not change the knob position while the reels are rotating.

Fuel Gauge

The fuel gauge (Figure 35) registers the amount of fuel in the tank.

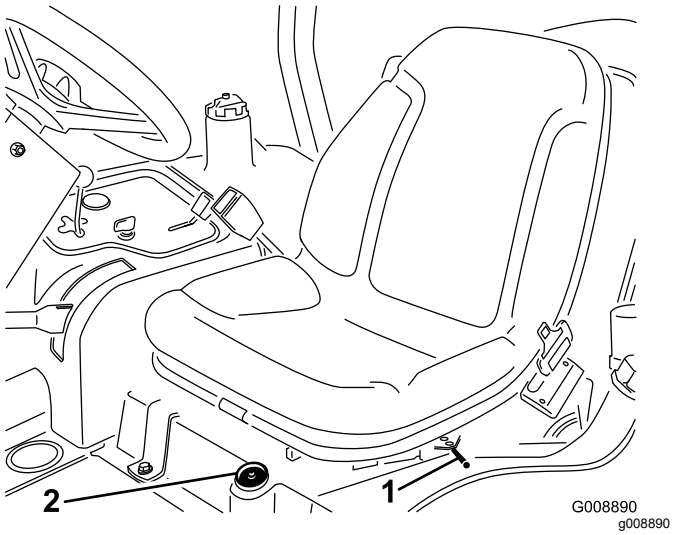

Figure 35

1. Seat adjustment lever
2. Fuel gauge

Seat Adjustment Lever

Move the lever (Figure 35) on the side of the seat outward, slide the seat to the desired position, and release the lever to lock the seat into position.

Specifications

Note: Specifications and design are subject to change without notice.

Transport width	203 cm (80 inches) in 183 cm (72 inches) width of cut 234 cm (92 inches) in 216 cm (85 inches) width of cut
Width of cut	183 cm (72 inches) or 216 cm (85 inches)
Length	248 cm (93 inch)
Height	193 cm (76 inches) with ROPS
Net weight*	844 kg (1,860 lb)
Fuel tank capacity	28 L (7.5 US gallons).
Ground speed	Mow: 0 to 10 km/h (0 to 6 mph); Transport: 0 to 14 km/h (0 to 9 mph). Reverse: 0 to 6 km/h (0 to 4 mph)
* With cutting units and fluids	

Attachments/Accessories

A selection of Toro approved attachments and accessories is available for use with the machine to enhance and expand its capabilities. Contact your Authorized Service Dealer or authorized Toro distributor or go to www.Toro.com for a list of all approved attachments and accessories.

To ensure optimum performance and continued safety certification of the machine, use only genuine Toro replacement parts and accessories. Replacement parts and accessories made by other manufacturers could be dangerous, and such use could void the product warranty.

Operation

Note: Determine the left and right sides of the machine from the normal operating position.

Before Operation

Before Operation Safety

General Safety

- Never allow children or untrained people to operate or service the machine. Local regulations may restrict the age of the operator. The owner is responsible for training all operators and mechanics.
- Become familiar with the safe operation of the equipment, operator controls, and safety signs.
- Before you leave the operator's position, do the following:
  - Park the machine on a level surface.
  - Disengage and lower the cutting units.
  - Engage the parking brake.
  - Shut off the engine and remove the key.
  - Wait for all movement to stop.
  - Allow the machine to cool before adjusting, servicing, cleaning, or storing it.
- Know how to stop the machine and shut off the engine quickly.
- Do not operate the machine without all guards and other safety protective devices in place and functioning properly on the machine.
- Before mowing, always inspect the machine to ensure that the cutting units are in good working condition.
- Inspect the area where you will use the machine and remove all objects that the machine could throw.

Fuel Safety

- Use extreme care in handling fuel. It is flammable and its vapors are explosive.
- Extinguish all cigarettes, cigars, pipes, and other sources of ignition.
- Use only an approved fuel container.
- Do not remove the fuel cap or fill the fuel tank while the engine is running or hot.
- Do not add or drain fuel in an enclosed space.
- Do not store the machine or fuel container where there is an open flame, spark, or pilot light, such as on a water heater or other appliance.
- If you spill fuel, do not attempt to start the engine; avoid creating any source of ignition until the fuel vapors have dissipated.

Performing Daily Maintenance

Service Interval: Before each use or daily

Before starting the machine each day, perform the Each Use/Daily procedures listed in Maintenance (page 33).

Checking the Interlock System

Service Interval: Before each use or daily

⚠ CAUTION

If the safety interlock switches are disconnected or damaged, the machine could operate unexpectedly, causing personal injury.

- **Do not tamper with the interlock switches.**
- **Check the operation of the interlock switches daily and replace any damaged switches before operating the machine.**

1. Ensure that all bystanders are away from the area of operation, and keep hands and feet away from the cutting units.
2. While sitting on the seat, the engine must not start with either the cutting unit switch engaged or the traction pedal engaged. Correct the problem if it is not operating properly.
3. While sitting on the seat, put the traction pedal in neutral, disengage the parking brake, and set the cutting unit switch in the OFF position. The engine should start. Rise from the seat and slowly press the traction pedal, and the engine should shut off in 1 to 3 seconds. Correct the problem if it is not operating properly.

Note: The machine is equipped with an interlock switch on the parking brake. The engine shuts off if you press the traction pedal with the parking brake engaged.

Filling the Fuel Tank

Use only clean, fresh diesel fuel or biodiesel fuels with low (<500 ppm) or ultra low (<15 ppm) sulfur content.

The minimum cetane rating should be 40. Purchase fuel in quantities that can be used within 180 days to ensure fuel freshness.

The fuel tank capacity is approximately 28 L (7.5 US gallons).

Use summer-grade diesel fuel (No. 2-D) at temperatures above -7°C (20°F) and winter-grade (No. 1-D or No. 1-D/2-D blend) below that temperature. Using winter-grade fuel at lower temperatures provides a lower flash point and cold flow characteristics, which eases starting and reduces plugging of the fuel filter.

Using summer-grade fuel above -7°C (20°F) contributes toward longer fuel pump life and increased power compared to winter-grade fuel.

Biodiesel Ready

This machine can also use a biodiesel blended fuel of up to B20 (20% biodiesel, 80% petrodiesel). The petrodiesel portion should be low or ultra low sulfur. Observe the following precautions:

- The biodiesel portion of the fuel must meet specification ASTM D6751 or EN14214.
- The blended fuel composition should meet ASTM D975 or EN590.
- Painted surfaces may be damaged by biodiesel blends.
- Use B5 (biodiesel content of 5%) or lesser blends in cold weather.
- Monitor seals, hoses, gaskets in contact with fuel as they may be degraded over time.
- Fuel filter plugging may be expected for a time after converting to biodiesel blends.
- Contact a distributor for more information on biodiesel blended fuel.

1. Park the machine on a level surface, lower the cutting units, engage the parking brake, shut off the engine, and remove the key.
2. Clean the area around the fuel-tank cap (Figure 36).

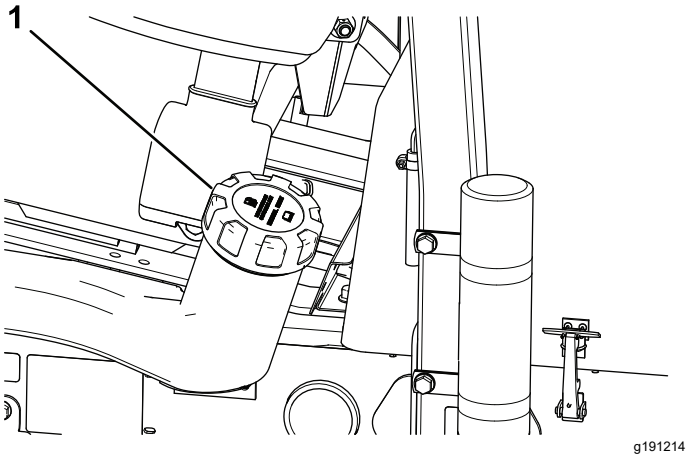

Figure 36

1. Fuel-tank cap

3. Remove the fuel-tank cap.
4. Fill the tank to the bottom of the filler neck.

   Note: Do not overfill the fuel tank.
5. Install the cap.
6. Wipe up any spilled fuel.

During Operation

During Operation Safety

General Safety

- The owner/operator can prevent and is responsible for accidents that may cause personal injury or property damage.
- Wear appropriate clothing, including eye protection; long pants; substantial, slip-resistant footwear; and hearing protection. Tie back long hair and do not wear loose clothing or loose jewelry.
- Do not operate the machine while ill, tired, or under the influence of alcohol or drugs.
- Use your full attention while operating the machine. Do not engage in any activity that causes distractions; otherwise, injury or property damage may occur.
- Before you start the engine, ensure that all drives are in neutral, the parking brake is engaged, and you are in the operating position.
- Do not carry passengers on the machine and keep bystanders and children out of the operating area.
- Operate the machine only in good visibility to avoid holes or hidden hazards.
- Avoid mowing on wet grass. Reduced traction could cause the machine to slide.

- Keep your hands and feet away from the cutting units.
- Look behind and down before backing up to be sure of a clear path.
- Use care when approaching blind corners, shrubs, trees, or other objects that may obscure your vision.
- Stop the cutting units whenever you are not mowing.
- Slow down and use caution when making turns and crossing roads and sidewalks with the machine. Always yield the right-of-way.
- Operate the engine only in well-ventilated areas. Exhaust gases contain carbon monoxide, which is lethal if inhaled.
- Do not leave a running machine unattended.
- Before you leave the operator's position, do the following:
  - Park the machine on a level surface.
  - Disengage and lower the cutting units.
  - Engage the parking brake.
  - Shut off the engine and remove the key.
  - Wait for all movement to stop.
  - Allow the machine to cool before adjusting, servicing, cleaning, or storing it.
- Operate the machine only in good visibility and appropriate weather conditions. Do not operate the machine when there is the risk of lightning.

Rollover Protection System (ROPS) Safety

- Do not remove any of the ROPS components from the machine.
- Ensure that the seat belt is attached and that you can release it quickly in an emergency.
- Always wear your seat belt.
- Check carefully for overhead obstructions and do not contact them.
- Keep the ROPS in safe operating condition by thoroughly inspecting it periodically for damage and keeping all the mounting fasteners tight.
- Replace all damaged ROPS components. Do not repair or alter them.

Slope Safety

- Slopes are a major factor related to loss of control and rollover accidents, which can result in severe injury or death. You are responsible for safe slope operation. Operating the machine on any slope requires extra caution.
- Evaluate the site conditions to determine if the slope is safe for machine operation, including surveying the site. Always use common sense and good judgment when performing this survey.
- Review the slope instructions, listed below, for operating the machine on slopes. Before you operate the machine, review the site conditions to determine whether you can operate the machine in the conditions on that day and at that site. Changes in the terrain can result in a change in slope operation for the machine.
  - Avoid starting, stopping, or turning the machine on slopes. Avoid making sudden changes in speed or direction. Make turns slowly and gradually.
  - Do not operate a machine under any conditions where traction, steering, or stability is in question.
  - Remove or mark obstructions such as ditches, holes, ruts, bumps, rocks, or other hidden hazards. Tall grass can hide obstructions. Uneven terrain could overturn the machine.
  - Be aware that operating the machine on wet grass, across slopes, or downhill may cause the machine to lose traction.
  - Use extreme caution when operating the machine near drop-offs, ditches, embankments, water hazards, or other hazards. The machine could suddenly roll over if a wheel goes over the edge or the edge caves in. Establish a safety area between the machine and any hazard.
  - Identify hazards at the base of the slope. If there are hazards, mow the slope with a pedestrian-controlled machine.
  - If possible, keep the cutting units lowered to the ground while operating on slopes. Raising the cutting units while operating on slopes can cause the machine to become unstable.

This triplex mower has a unique drive system for superior traction on hills. The uphill wheel does not spin out and limit traction like conventional triplex mowers. If you operate the machine on a side hill that is too steep, rollover will occur before losing traction.

- When possible, mow up and down a hill rather than across it.
- On side hills, shift the cutting units uphill (if equipped).
- If the tires lose traction, disengage the blade(s) and proceed slowly straight down the slope.
- If you must turn, turn slowly and gradually downhill, if possible.

Starting the Engine

You may need to bleed the fuel system if any of the following situations have occurred; refer to Bleeding the Fuel System (page 29):

- **It is the initial startup of a new engine.**
- **The engine has ceased running due to lack of fuel.**
- **Maintenance has been performed upon the fuel system components; e.g., filter replaced, etc.**

1. Ensure that the parking brake is engaged and the reel drive switch is in the DISENGAGE position.
2. Remove your foot from the traction pedal and ensure that the pedal is in the neutral position.
3. Move the throttle lever to the 1/2 throttle position.
4. Insert the key into the switch and rotate it to the ON/PREHEAT position until the glow plug indicator light goes out (approximately 7 seconds); then rotate the key to the START position to engage the starter motor. Release the key when the engine starts.

   Note: The key moves automatically to the ON/RUN position.

   Important: **To prevent overheating of the starter motor, do not engage the starter longer than 15 seconds. After 10 seconds of continuous cranking, wait 60 seconds before engaging the starter motor again.**
5. When the engine is started for the first time or after an overhaul of the engine, operate the machine in forward and reverse for 1 to 2 minutes. Also operate the lift lever and cutting unit drive switch to ensure proper operation of all parts.

   Note: Turn the steering wheel to the left and right to check the steering response, then shut the engine off and check for oil leaks, loose parts, and any other noticeable malfunctions.

⚠ CAUTION

Checking for oil leaks, loose parts, and other malfunctions could result in injury.

Shut off the engine and wait for all moving parts to stop before checking for oil leaks, loose parts, and other malfunctions.

Shutting Off the Engine

Move the throttle control to the IDLE position, move the reel drive switch to DISENGAGE, and rotate the starter key to OFF.

Note: Remove the key from the switch to prevent accidental starting.

Bleeding the Fuel System

1. Park the machine on a level surface, lower the cutting units, shut off the engine, engage the parking brake, and remove the key from the ignition switch.
2. Ensure that the fuel tank is at least half full.
3. Unlatch and raise the hood.
4. Open the air bleed screw on the fuel-injection pump (Figure 37).

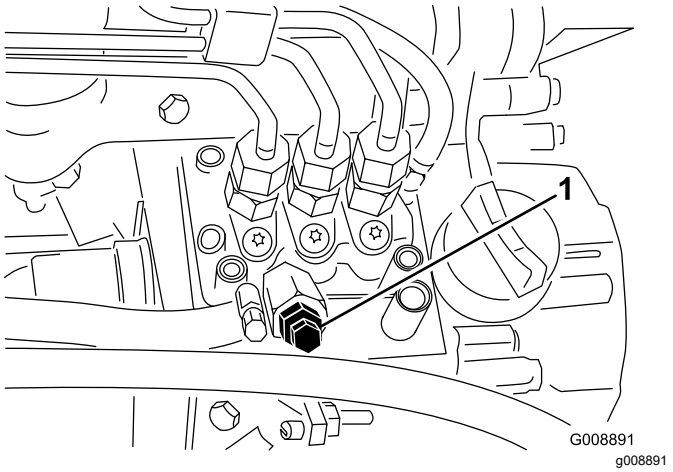

Figure 37

1. Fuel-injection pump bleed screw

5. Turn the key in the ignition switch to the ON position. The electric fuel pump begins operation, thereby forcing air out around the air bleed screw.

   Note: Leave the key in the ON position until a solid stream of fuel flows out around the screw.
6. Tighten the screw and turn the key to off.

Note: Normally the engine should start after following the bleeding procedures above. However, if the engine does not start, air may be trapped between the injection pump and the injectors; refer to Bleeding Air from the Injectors (page 43).

Cutting Grass with the Machine

1. Move the machine to the job site and align the machine outside the cutting area for the first cutting pass.
2. Ensure that the cutting-unit drive switch is pulled up (the DISENGAGE position); Cutting Unit Drive Switch (page 24).

3. Move the throttle to the FAST position; refer to Throttle (page 24).
4. Use the cutting-unit shift lever to lower the cutting units to the ground; refer to Cutting Unit Shift Lever (page 24).
5. Press the cutting-unit drive switch to prepare cutting units for operation (the ENGAGE position).
6. Use the cutting-unit shift lever to raise the cutting units off the ground.
7. Begin moving the machine toward the cutting area and lower the cutting units.

   Note: The cutting units run.
8. Before reaching the turnaround location, pull back the cutting-unit shift lever only long enough to raise the cutting units, and release the control lever.

   Important: **Do not hold the cutting-unit shift lever back while turning.**
9. Perform a tear-shaped turn to quickly line up for your next pass.

Clip Rate (Reel Speed)

To achieve a consistent, high quality of cut and a uniform after-cut appearance, it is important that the reel speed be matched to the height of cut.

Important: **If the reel speed is too slow, you may notice visible clip marks. If the reel speed is too fast, the cut may have a fuzzy appearance.**

Reel Speed Selection Chart

Height of Cut		5-Blade Reel		8-Blade Reel		11-Blade Reel	
		8 km/h (5 mph)	9.6 km/h (6 mph)	8 km/h (5 mph)	9.6 km/h (6 mph)	8 km/h (5 mph)	9.6 km/h (6 mph)
63.5 mm	2-1/2 inches	3	3	3*	3*	–	–
60.3 mm	2-3/8 inches	3	4	3*	3*	–	–
57.2 mm	2-1/4 inches	3	4	3*	3*	–	–
54.0 mm	2-1/8 inches	3	4	3*	3*	–	–
50.8 mm	2 inches	3	4	3*	3*	–	–
47.6 mm	1-7/8 inches	4	5	3*	3*	–	–
44.5 mm	1-3/4 inches	4	5	3*	3*	–	–
41.3 mm	1-5/8 inches	5	6	3*	3*	–	–
38.1 mm	1-1/2 inches	5	7	3	4	–	–
34.9 mm	1-3/8 inches	5	8	3	4	–	–
31.8 mm	1-1/4 inches	6	9	4	4	–	–
28.8 mm	1-1/8 inches	8	9*	4	5	–	–
25. mm	1 inch	9	9*	5	6	–	–
22.2 mm	7/8 inch	9*	9*	5	7	–	–
19.1 mm	3/4 inch	9*	9*	7	9	6	7
15.9 mm	5/8 inch	9*	9*	9	9*	7	7
12.7 mm	1/2 inch	9*	9*	9	9*	8	8
9.5 mm	3/8 inch	9*	9*	9	9*	9	9

* Toro does not recommend this height of cut and/or mowing speed.

Note: The higher the number, the higher the speed.

Adjusting Reel Speed

1. Verify the height-of-cut setting on the cutting units. Use the column of the Reel Speed Selection Chart listing either 5-blade, 8-blade, or 11-blade reels, and find the height-of-cut listing nearest the actual height-of-cut setting. Look across the chart to find the reel-speed number that corresponds to that height of cut.
2. Lift the cover from the control arm (Figure 38).

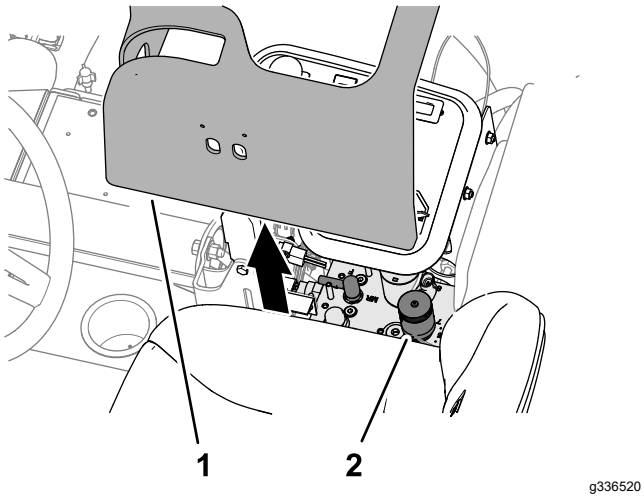

Figure 38

1. Cover (control arm)
2. Reel speed and backlap control

3. Turn the reel speed control knob (Figure 39) to the reel-speed number determined in Step 1.

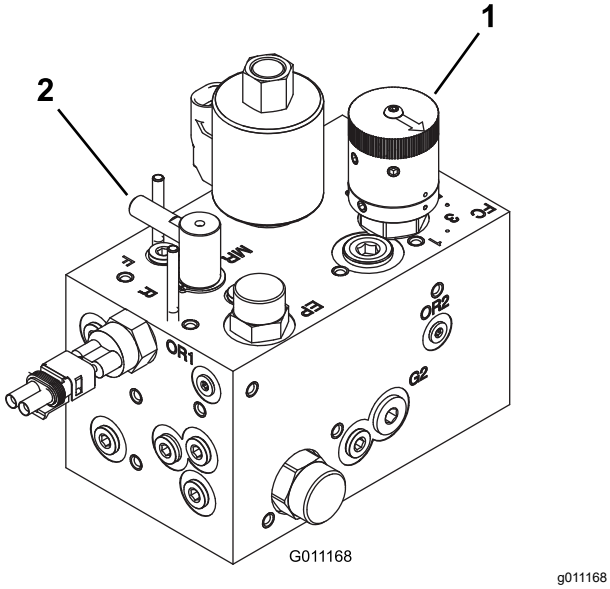

Figure 39

1. Reel speed control
2. Backlap control

4. Assemble the cover onto the control arm.
5. Operate the machine for several days, then examine the cut to ensure the quality of cut.

The reel speed knob may be set 1 position on either side of the reel-speed number indicated on the chart to account for differences in grass condition, grass length removed, and personal preference.

Operating Tips

Mowing Techniques

- To begin cutting, engage the cutting units, then approach the mowing area slowly. Once the front cutting units are over the mowing area, lower the cutting units.
- To achieve the professional straight-line cut and striping that is desirable for some applications, find a tree or other object in the distance and drive straight toward it.
- As soon as the front cutting units reach the edge of the mowing area, lift the cutting units and perform a tear drop shaped turn to quickly line you up for your next pass.
- To mow around bunkers, ponds, or other contours easily, use the Sidewinder and move the control lever left or right, depending on your mowing application. The cutting units can also be shifted to vary tire tracking.
- The cutting units tend to throw grass to the front or the rear of the machine. Front throw should be used when cutting smaller amounts of grass; thus, leaving a better after-cut appearance. To throw clippings to the front, simply close the rear shield on the cutting units.

⚠ CAUTION

To prevent personal injury or damage to the machine, do not open or close the cutting unit shields while the engine is running.

Shut off the engine and wait for all moving parts to stop before opening or closing the cutting unit shields.

- When cutting larger amounts of grass, position the shields to just below horizontal. **Do not open the shields too far or an excessive amount of clippings could build up on the frame, rear radiator screen, and engine area.**
- The cutting units are also equipped with balance weights on the non-motor end to give an even cut. You can add or remove weights if a mismatch occurs on your turf.

After Operation

After Operation Safety

General Safety

- Park the machine on a level surface.
- Disengage and lower the cutting units.
- Engage the parking brake.
- Shut off the engine and remove the key.
- Wait for all movement to stop.
- Allow the machine to cool before adjusting, servicing, cleaning, or storing it.
- Clean grass and debris from the cutting units, drives, mufflers, cooling screens, and engine compartment to help prevent fires. Clean up oil or fuel spills.
- Disengage the drive to the attachment whenever you are hauling or not using the machine.
- Maintain and clean the seat belt(s) as necessary.
- Do not store the machine or fuel container where there is an open flame, spark, or pilot light, such as on a water heater or on other appliances.

After Mowing

Wash the machine and grease it; refer to Washing the Machine (page 54) and Greasing the Bearings And Bushings (page 37)

Identifying the Tie-Down Points

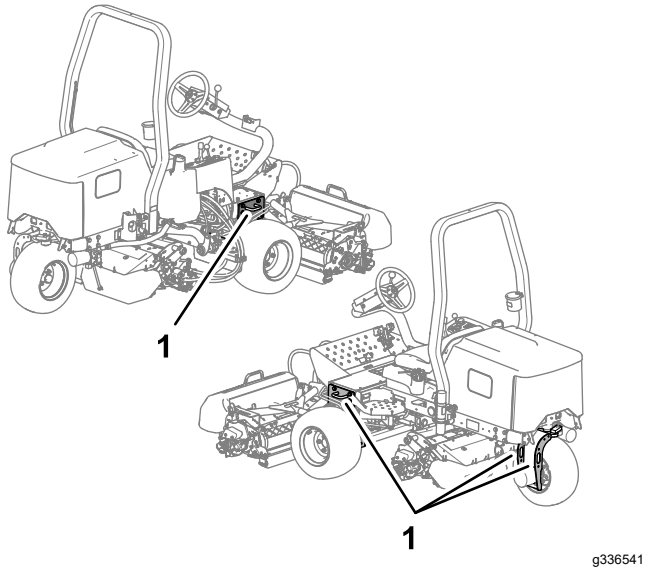

Figure 40

1. Tie-down loops

Hauling the Machine

- Use full-width ramps for loading the machine onto a trailer or truck.
- Tie the machine down securely.

Towing the Machine

In case of an emergency, the machine can be towed for a short distance; however, Toro does not recommend this as a standard procedure.

Important: **Do not tow the machine faster than 3 to 4 km/h (2 to 3 mph) because it may damage the drive system. If the machine must be moved a considerable distance, transport it on a truck or trailer.**

1. Locate the bypass valve on the pump (Figure 41) and rotate it 90°.

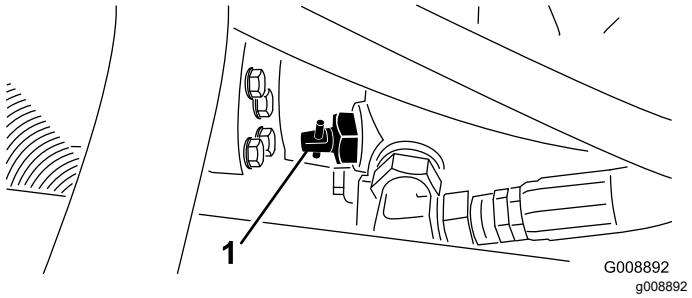

Figure 41

1. Bypass valve

2. Before starting the engine, close the bypass valve by rotating it 90° (1/4 turn). Do not start the engine while the valve is open.

Maintenance

Note: Determine the left and right sides of the machine from the normal operating position.

Maintenance Safety

- Before you leave the operator's position, do the following:
  - Park the machine on a level surface.
  - Disengage the cutting unit(s) and lower the attachments.
  - Engage the parking brake.
  - Shut off the engine and remove the key.
  - Wait for all movement to stop.
- Allow machine components to cool before performing maintenance.
- If possible, do not perform maintenance while the engine is running. Keep away from moving parts.
- Support the machine with jack stands whenever you work under the machine.
- Carefully release pressure from components with stored energy.
- Keep all parts of the machine in good working condition and all hardware tightened.
- Replace all worn or damaged decals.
- To ensure safe, optimal performance of the machine, use only genuine Toro replacement parts. Replacement parts made by other manufacturers could be dangerous, and such use could void the product warranty.

Recommended Maintenance Schedule(s)

Maintenance Service Interval	Maintenance Procedure
After the first hour	• Torque the wheel nuts.
After the first 10 hours	• Torque the wheel nuts. • Check the condition and tension of all belts.
After the first 50 hours	• Change the oil and the oil filter.
Before each use or daily	• Inspect the seat belt(s) for wear, cuts, and other damage. Replace the seat belt(s) if any component does not operate properly. • Check the interlock system. • Check the engine-oil level. • Drain the water separator. • Check the tire pressure. • Check the engine-coolant level. • Clean the radiator and oil cooler. • Check the hydraulic lines and hoses. • Check the level of the hydraulic fluid. • Check the reel-to-bedknife contact.
Every 25 hours	• Check the electrolyte level. (If machine is in storage, check every 30 days.)
Every 50 hours	• Lubricate all bearings and bushings (lubricate all bearings and bushings daily when conditions are dusty and dirty).
Every 100 hours	• Check the condition and tension of all belts.
Every 200 hours	• Service the air cleaner (more frequently in extreme dusty or dirty conditions). • Change the oil and the oil filter. • Torque the wheel nuts. • Check the parking brake adjustment.
Every 400 hours	• Check the fuel lines and connections. • Replace the fuel filter canister.
Every 500 hours	• Grease the bearings in the rear axle.

Maintenance Service Interval	Maintenance Procedure
Every 800 hours	• If you are not using the recommended hydraulic fluid or have ever filled the reservoir with an alternative fluid, change the hydraulic fluid. • If you are not using the recommended hydraulic fluid or have ever filled the reservoir with an alternative fluid, replace the hydraulic filter.
Every 1,000 hours	• If you are using the recommended hydraulic fluid, replace the hydraulic filter.
Every 2,000 hours	• If you are using the recommended hydraulic fluid, change the hydraulic fluid.
Every 2 years	• Drain and clean the fuel tank. • Drain and flush the coolant system (take the machine to an Authorized Service Dealer or Distributor or refer to the Service Manual).

Daily Maintenance Checklist

Duplicate this page for routine use.

Maintenance Check Item	For the week of:						
	Mon.	Tues.	Wed.	Thurs.	Fri.	Sat.	Sun.
Check the safety interlock operation.							
Check the brake operation.							
Check the fuel level.							
Check the engine-oil level.							
Check the cooling system fluid level.							
Drain the water/fuel separator.							
Check the air filter, dust cup, and burp valve.							
Check for unusual engine noises.[1]							
Check the radiator and screen for debris							
Check for unusual operating noises.							
Check the hydraulic system oil level.							
Check the hydraulic hoses for damage.							
Check for fluid leaks.							
Check the fuel level.							
Check the tire pressure.							
Check the instrument operation.							
Check the reel-to-bedknife contact adjustment.							
Check the height-of-cut adjustment.							
Lubricate all the grease fittings.[2]							
Touch-up any damaged paint.							
Wash the machine.							

[1]Check the glow plug and injector nozzles if starting is hard, there is excess smoke, or rough running is noted.

[2]Immediately **after every** washing, regardless of the interval listed.

Important: **Refer to your engine operator's manual for additional maintenance procedures.**

Note: To obtain an electrical schematic or a hydraulic schematic for your machine, visit www.Toro.com.

Notation for Areas of Concern

Inspection performed by:		
Item	**Date**	**Information**

Pre-Maintenance Procedures

Removing the Battery Cover

Remove the 2 knobs that secure the battery cover to the machine, and remove the cover (Figure 40).

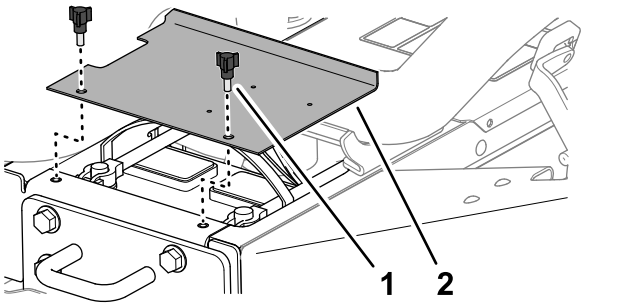

g336164

Figure 42

1. Knob
2. Battery cover

Opening the Hood

1.

   Release the latches at the left side and right side of the hood (Figure 42).

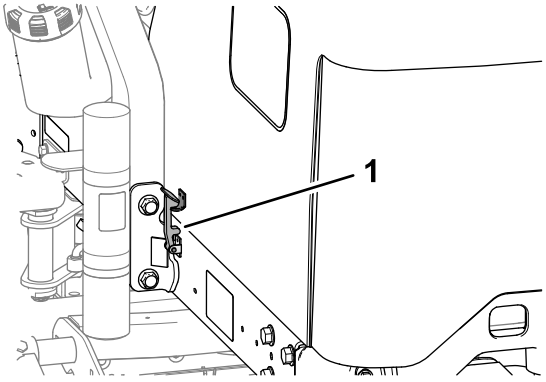

g336542

Figure 43

1. Hood latch

2. Rotate the hood up and back (Figure 43).

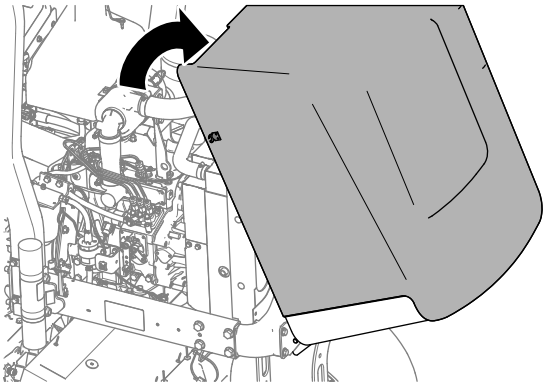

g336543

Figure 44

Greasing the Bearings And Bushings

Service Interval: Every 50 hours (lubricate all bearings and bushings daily when conditions are dusty and dirty).

Every 500 hours/Yearly (whichever comes first)

The machine has grease fittings that must be lubricated regularly with No. 2 lithium grease. Lubricate the bearings and bushings daily when the operating conditions are extremely dusty and dirty. Dusty and dirty operating conditions could cause dirt to get into the bearings and bushings, resulting in accelerated wear. Lubricate the grease fittings immediately after every washing, regardless of the interval specified.

The grease fitting locations and quantities are as follows:

- Rear cutting unit pivot (Figure 45)

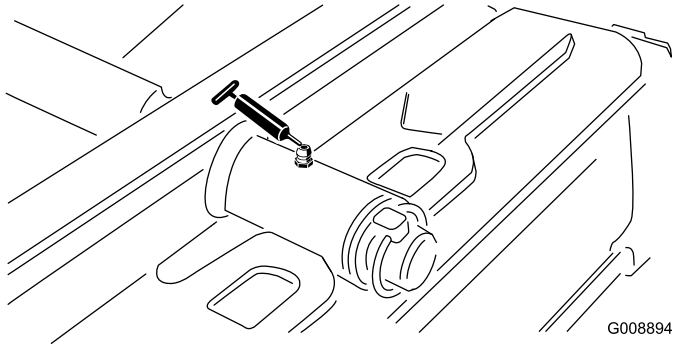

Figure 45

- Front cutting unit pivot (Figure 46)

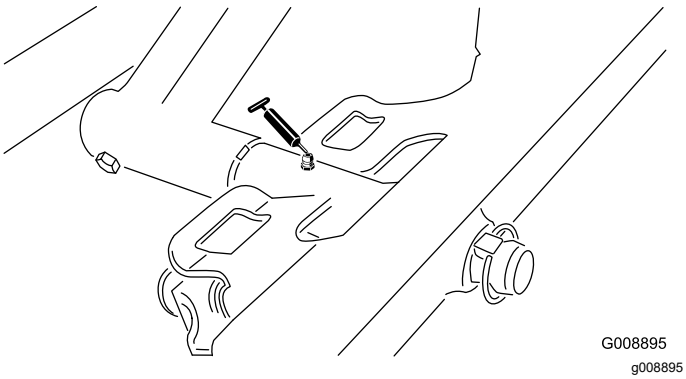

Figure 46

- Sidewinder cylinder ends (2; Model 03171 only) (Figure 47)

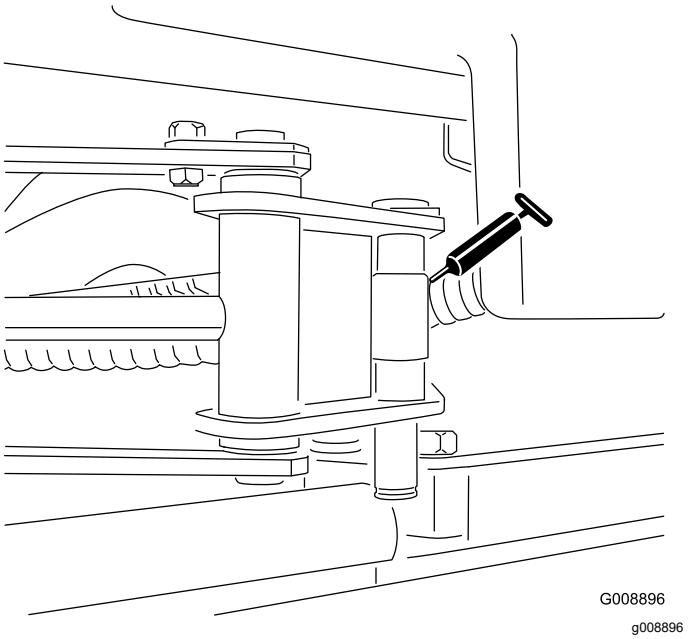

Figure 47

- Steering pivot (Figure 48)

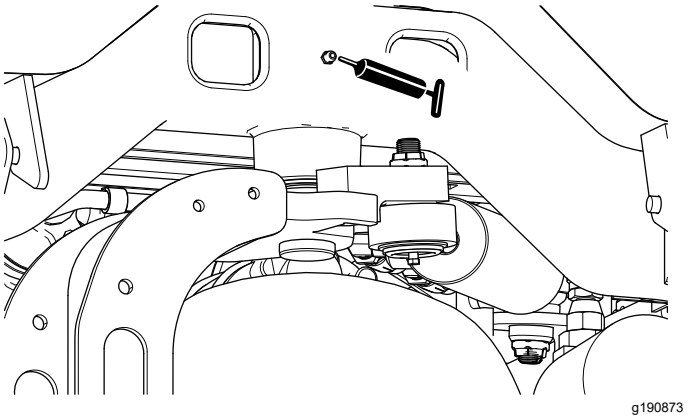

Figure 48

- Rear lift arm pivot and lift cylinder (2) (Figure 49)

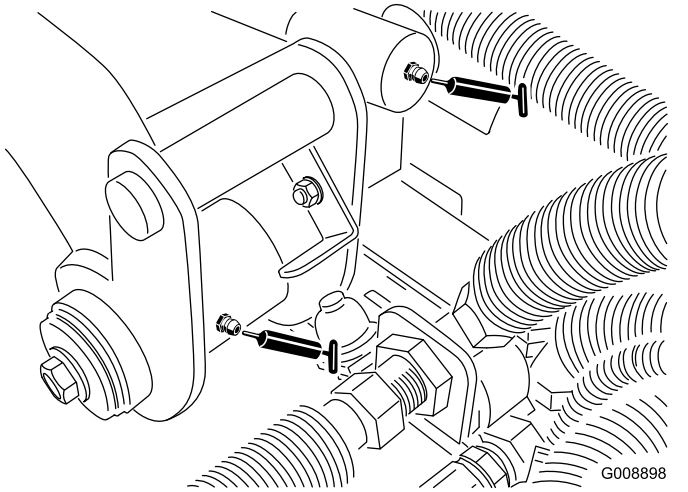

Figure 49

- Left front lift arm pivot and lift cylinder (2) (Figure 50)

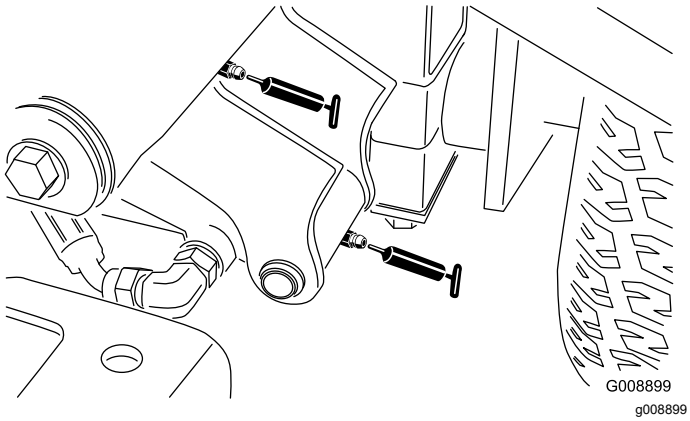

Figure 50

- Right front lift arm pivot and lift cylinder (2) (Figure 51)

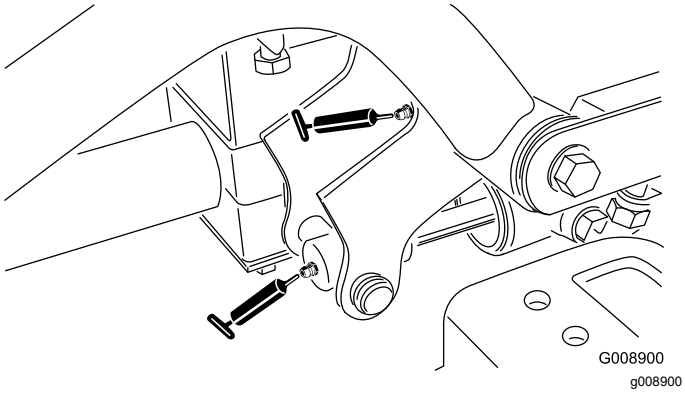

Figure 51

- Neutral adjust mechanism (Figure 52)

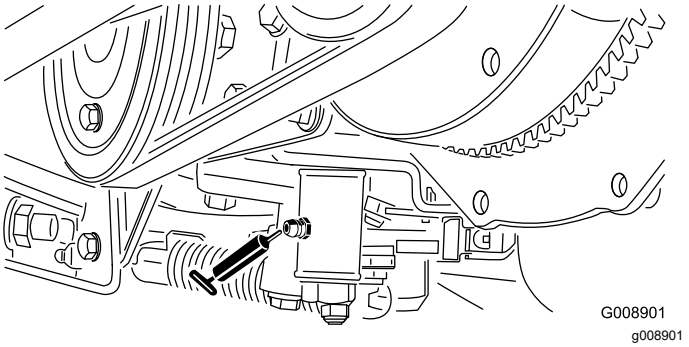

Figure 52

- Mow/transport slide (Figure 53)

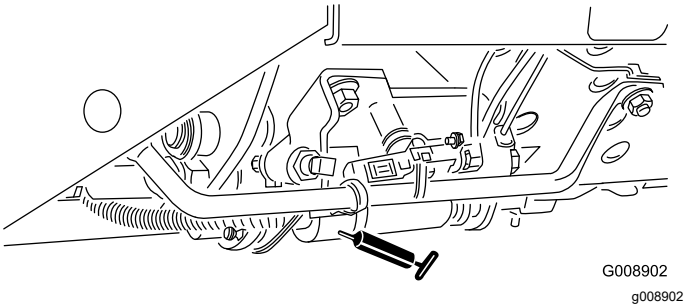

Figure 53

- Belt tension pivot (Figure 54)

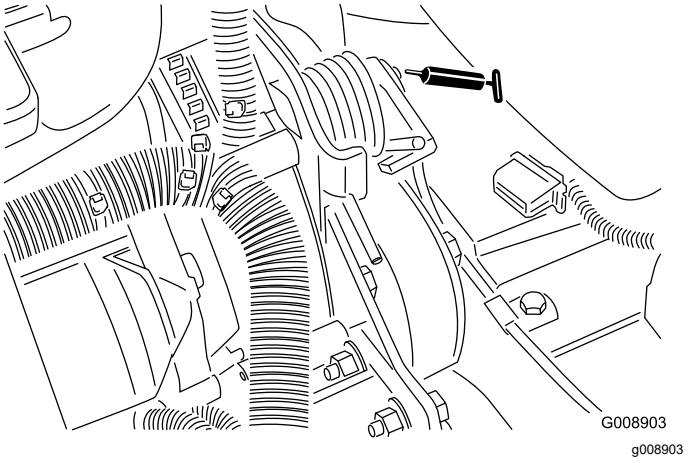

Figure 54

- Steering cylinder (Figure 55).

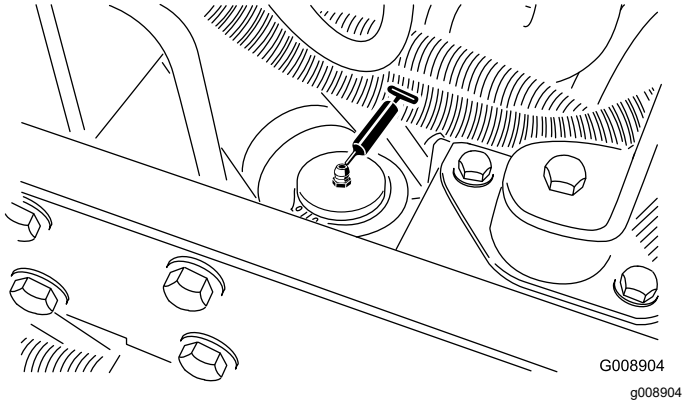

g008904

Figure 55

Note: If desired, install an additional grease fitting in the other end of the steering cylinder. Remove the tire, install the fitting, grease the fitting, remove the fitting, and install the plug (Figure 56).

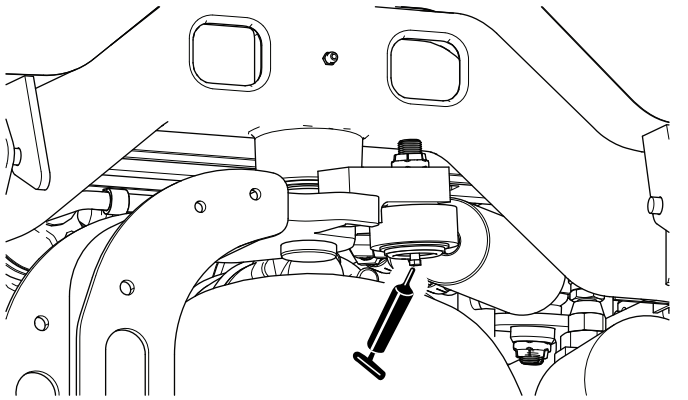

g190872

Figure 56

Checking the Sealed Bearings

Bearings rarely fail from defects in materials or workmanship. The most common reason for failure is moisture and contamination working its way past the protective seals. Bearings that are greased rely upon regular maintenance to purge harmful debris from the bearing area. **Sealed** bearings rely on an initial fill of special grease and a robust integral seal to keep contaminants and moisture out of the rolling elements.

The sealed bearings require no lubrication or short-term maintenance. This minimizes routine service required and reduces the potential of turf damage due to grease contamination. These sealed bearing packages will provide good performance and life under normal use, but you should periodically inspect the bearing condition and seal integrity to avoid downtime. Inspect the bearings seasonally and replace the them if they are damaged or worn. Bearings should operate smoothly with no detrimental characteristics such as high heat, noise, looseness, or indications of corrosion (rust).

Due to the operating conditions these bearing/seal packages are subject to (i.e., sand, turf chemicals, water, impacts, etc.) they are considered normal wear items. Bearings that fail due to causes other than defects in materials or workmanship are typically not covered under the warranty.

Note: Bearing life can be negatively affected by improper wash-down procedures. Do not wash down the machine when it is still hot and avoid directing high-pressure or high-volume spray at the bearings.

Engine Maintenance

Engine Safety

- Shut off the engine before checking the oil or adding oil to the crankcase.
- Do not change the governor speed or overspeed the engine.

Servicing the Air Cleaner

Service Interval: Every 200 hours (more frequently in extreme dusty or dirty conditions).

- Check the air cleaner body for damage which could cause an air leak. Replace it if it is damaged. Check the whole intake system for leaks, damage, or loose hose clamps.
- Service the air cleaner at the recommended service interval or earlier if engine performance suffers due to extremely dusty, dirty conditions. Changing the air filter before it is necessary only increases the chance of dirt entering the engine when the filter is removed.
- Ensure that the cover is seated correctly and seals with the air-cleaner body.

1. Release the latches that secure the air-cleaner cover to the air-cleaner body (Figure 57).

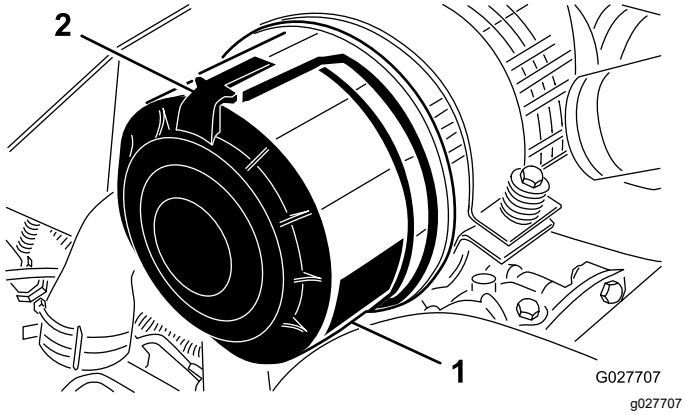

Figure 57

1. Air-cleaner cover
2. Air-cleaner latch

2. Remove the cover from the air-cleaner body.
3. Before removing the filter, use low-pressure air—276 kPa (40 psi), clean and dry—to help remove large accumulations of debris packed between the outside of primary filter and the canister. Avoid using high-pressure air which could force dirt through the filter into the intake tract. This cleaning process prevents debris from migrating into the intake when you remove the primary filter.
4. Remove and replace the primary filter (Figure 58).

   Note: Cleaning the used element may damage the filter media.

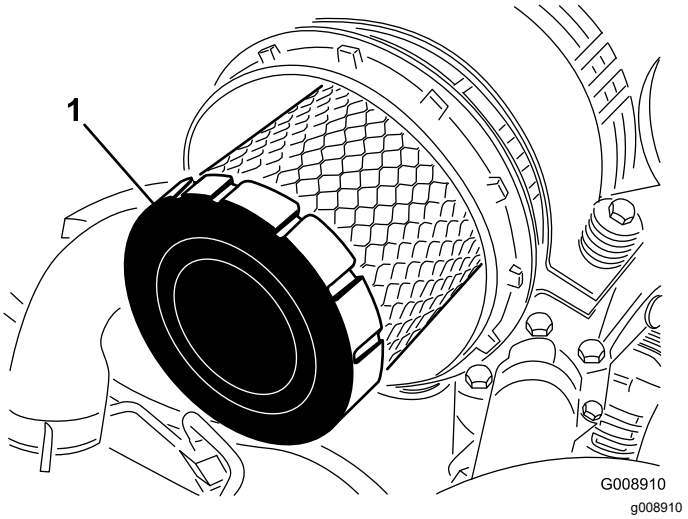

Figure 58

1. Primary filter

5. Inspect the new filter for shipping damage and check the sealing end of the filter and the body. **Do not use a damaged element.**
6. Insert the new filter by applying pressure to the outer rim of the element to seat it in the canister. **Do not apply pressure to the flexible center of the filter.**
7. Clean the dirt ejection port located in the removable cover.
8. Remove the rubber outlet valve from the cover, clean the cavity, and replace the outlet valve.
9. Install the cover orienting the rubber outlet valve in a downward position—between approximately 5 o'clock to 7 o'clock when viewed from the end.
10. Secure the cover latches.

Checking the Engine-Oil Level

Service Interval: Before each use or daily

The engine is shipped with oil in the crankcase; however, the oil level must be checked before and after the engine is first started.

The crankcase capacity is approximately 3.8 L (4.0 US qt) with the filter.

Use high-quality engine oil that meets the following specifications:

- API Classification Level Required: CH-4, CI-4 or higher.
- Preferred oil: SAE 15W-40 (above -17ºC (0ºF))
- Alternate oil: SAE 10W-30 or 5W-30 (all temperatures)

Note: Toro Premium Engine oil is available from a distributor in either 15W-40 or 10W-30 viscosity. See the parts catalog for part numbers.

Note: The best time to check the engine oil is when the engine is cool before it has been started for the day. If it has already been run, allow the oil to drain back down to the sump for at least 10 minutes before checking. If the oil level is at or below the Add mark on the dipstick, add oil to bring the oil level to the Full mark. **Do not overfill.** If the oil level is between the Full and Add marks, you do not need to add oil.

1. Park the machine on a level surface, lower the cutting units, shut off the engine, engage the parking brake, and remove the key from the ignition switch.
2. Remove the dipstick (Figure 59) and wipe it with a clean rag.

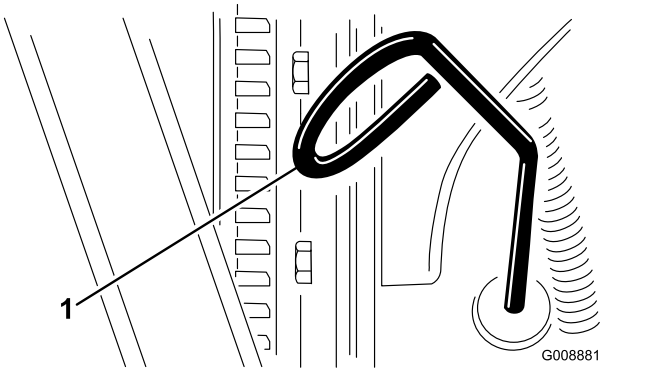

Figure 59

1. Dipstick

3. Push the dipstick down into the dipstick tube and ensure that it is seated fully, then pull the dipstick out and check the oil level.
4. If the oil level is low, remove the oil-fill cap (Figure 60) and gradually add small quantities of oil, checking the level frequently, until the level reaches the Full mark on the dipstick.

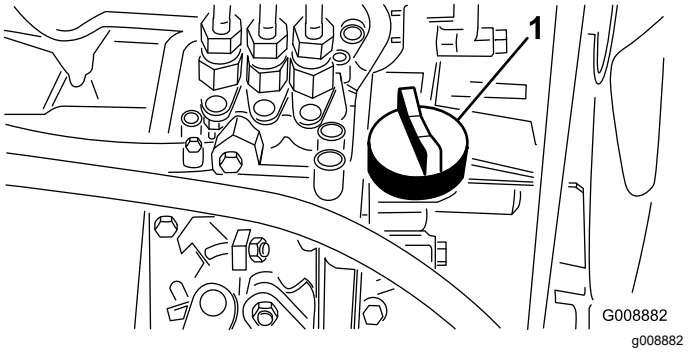

Figure 60

1. Oil-fill cap

5. Install the oil-fill cap and close the hood.

   Important: **Keep the engine-oil level between the upper and lower limits on the oil gauge. Engine failure may occur as a result of overfilling or underfilling the engine oil.**

Changing the Engine Oil and the Filter

Service Interval: After the first 50 hours

Every 200 hours

1. Remove either drain plug (Figure 61) and let the oil flow into a drain pan; when the oil stops flowing, install the drain plug.

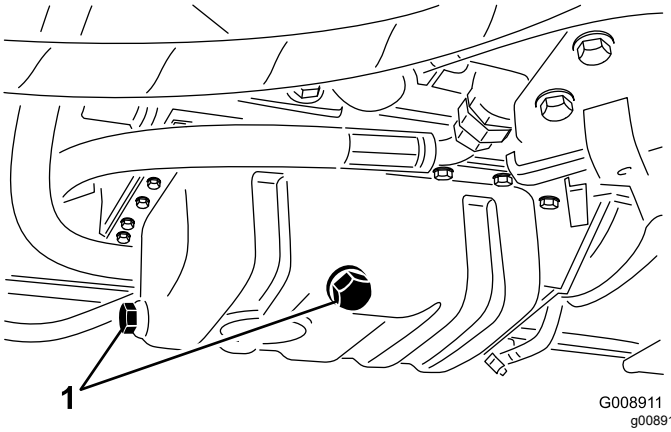

Figure 61

1. Drain plugs

2. Remove the oil filter (Figure 62).

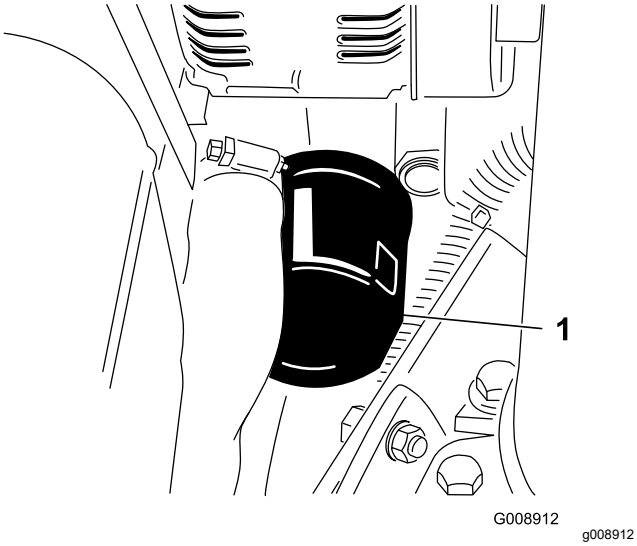

Figure 62

1. Oil filter

3. Apply a light coat of clean oil to the new filter seal and install the oil filter.

   Note: Do not overtighten the filter.

4. Add oil to the crankcase; refer to Checking the Engine-Oil Level (page 40).

Fuel System Maintenance

⚠ DANGER

Under certain conditions, fuel and fuel vapors are highly flammable and explosive. A fire or explosion from fuel can burn you and others and can cause property damage.

- **Fill the fuel tank outdoors, in an open area, when the engine is off and is cold. Wipe up any fuel that spills.**
- **Do not fill the fuel tank completely full. Add fuel to the fuel tank until the level is 25 mm (1 inch) below the top of the tank, not the filler neck. This empty space in the tank allows the fuel to expand.**
- **Never smoke when handling fuel, and stay away from an open flame or where fuel fumes may be ignited by a spark.**
- **Store fuel in a clean, safety-approved container and keep the cap in place.**

Servicing the Fuel Tank

Service Interval: Every 2 years—Drain and clean the fuel tank.

Drain and clean the tank if the fuel system becomes contaminated or if the machine will be stored for an extended period of time. Use clean fuel to flush out the tank.

Inspecting the Fuel Lines and Connections

Service Interval: Every 400 hours/Yearly (whichever comes first)

Inspect the fuel lines and connections for deterioration, damage, or loose connections.

Draining the Water Separator

Service Interval: Before each use or daily

1. Place a clean container under the fuel filter.
2. Loosen the drain valve on the bottom of the filter canister (Figure 63).

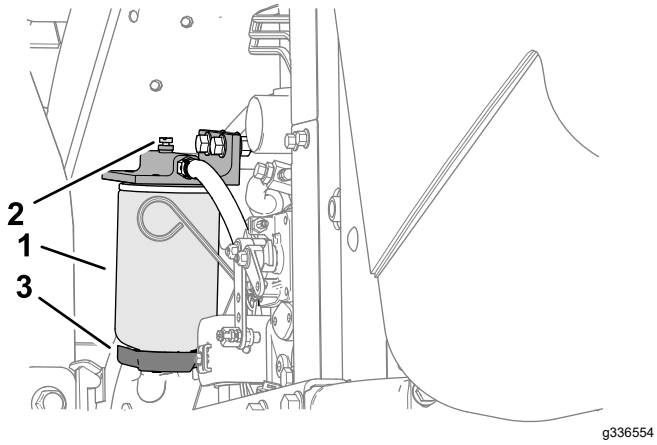

Figure 63

1. Water separator/filter canister
2. Vent plug
3. Drain valve

3. Tighten the valve after draining.

Changing the Fuel Filter Canister

Service Interval: Every 400 hours

1. Clean the area where the filter canister mounts (Figure 63).
2. Remove the filter canister and clean the mounting surface.
3. Lubricate the gasket on the filter canister with clean oil.
4. Install the filter canister by hand until the gasket contacts the mounting surface; then rotate an additional 1/2 turn.

Bleeding Air from the Injectors

Note: Perform this procedure only when the fuel system has been purged of air through normal priming procedures and the engine does not start; refer to Bleeding the Fuel System (page 29).

1. Loosen the pipe connection to the #1 nozzle and holder assembly.

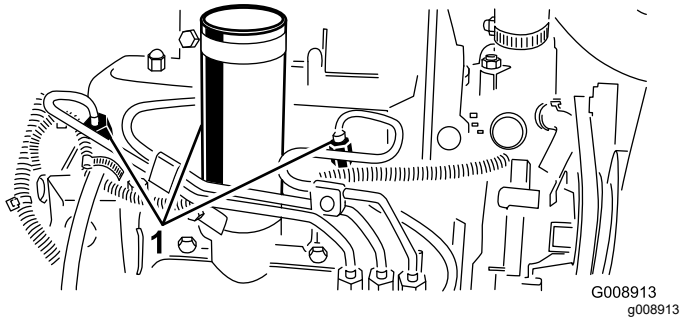

Figure 64

1. Fuel injectors

2. Move the throttle to the FAST position.
3. Turn the key in the key switch to the START position and watch the fuel flow around the connector. Turn the key to the OFF position when you see a solid flow.
4. Tighten the pipe connector securely.
5. Repeat this procedure on the remaining nozzles.

Electrical System Maintenance

Electrical System Safety

- Disconnect the battery before repairing the machine. Disconnect the negative terminal first and the positive last. Connect the positive terminal first and the negative last.
- Charge the battery in an open, well-ventilated area, away from sparks and flames. Unplug the charger before connecting or disconnecting the battery. Wear protective clothing and use insulated tools.

Servicing the Battery

Service Interval: Every 25 hours—Check the electrolyte level. (If machine is in storage, check every 30 days.)

The battery electrolyte level must be properly maintained and the top of the battery kept clean. If the machine is stored in a location where temperatures are extremely high, the battery will run down more rapidly than if the machine is stored in a location where temperatures are cool.

⚠ DANGER

Battery electrolyte contains sulfuric acid which is a deadly poison and causes severe burns.

- **Do not drink electrolyte and avoid contact with skin, eyes or clothing. Wear safety glasses to shield your eyes and rubber gloves to protect your hands.**
- **Fill the battery where clean water is always available for flushing the skin.**
- **Charge the battery in a well-ventilated place so that the gasses produced while charging can dissipate.**
- **Since the gases are explosive, keep open flames and electrical sparks away from the battery; do not smoke.**
- **Nausea may result if the gases are inhaled.**
- **Unplug the charger from the electrical outlet before connecting to or disconnecting the charger leads from the battery posts.**

Maintain the cell level with distilled or demineralized water. Do not fill the cells above the bottom of the split ring inside each cell. Install the filler caps with the vents pointing to the rear (toward the fuel tank).

Keep the top of the battery clean by washing it periodically with a brush dipped in ammonia or bicarbonate of soda solution. Flush the top surface with water after cleaning. Do not remove the filler caps while cleaning.

The battery cables must be tight on the terminals to provide good electrical contact.

If corrosion occurs at the terminals, disconnect the cables, negative (–) cable first, and scrape the clamps and terminals separately. Connect the cables, positive (+) cable first, and coat the terminals with petroleum jelly.

Servicing the Fuses

1. Lift the cover from the control arm (Figure 65).

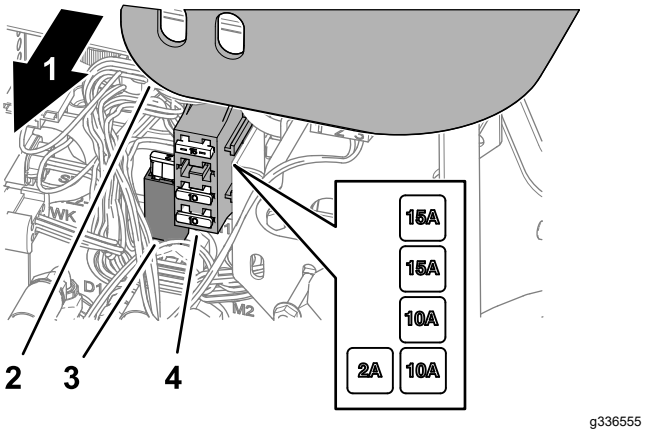

Figure 65

1. Right side of the machine
2. Control-arm cover
3. Fuse holder
4. Fuse block

2. Locate the open fuse in the fuse holder or fuse block (Figure 65).
3. Replace the fuse with the same type and amperage fuse.
4. Assemble the cover onto the control arm (Figure 65).

Drive System Maintenance

Checking the Tire Pressure

Service Interval: Before each use or daily

The tires are over-inflated for shipping. Therefore, release some of the air to reduce the pressure. The proper air pressure in the tires is 97 to 124 kPa (14 to 18 psi).

Note: Maintain the recommended pressure in all tires to ensure a good quality of cut and proper machine performance.

⚠ DANGER

Low tire pressure decreases machine side hill stability. This could cause a rollover, which may result in personal injury or death.

Do not under-inflate the tires.

Torquing the Wheel Nuts

Service Interval: After the first hour

After the first 10 hours

Every 200 hours

Torque the wheel nuts in a crossing pattern to 61 to 88 N·m (45 to 65 ft-lb).

⚠ WARNING

Failure to maintain proper torque of the wheel nuts could result in personal injury.

Ensure that the wheel nuts are torqued to 61 to 88 N·m (45 to 65 ft-lb).

Adjusting the Traction Drive for Neutral

If the machine moves when the traction pedal is in the NEUTRAL position, adjust the traction cam.

1. Park the machine on a level surface, lower the cutting units, engage the parking brake, shut off the engine, and remove the key from the ignition switch.
2. Raise a front wheel and a rear wheel off the floor and place support blocks under the frame.

⚠ WARNING

If the machine is not supported adequately, it may accidentally fall, injuring anyone under the machine.

A front wheel *and* a rear wheel must be raised off the ground; otherwise, the machine will move during adjustment.

3. Loosen the locknut on the traction adjustment cam (Figure 66).

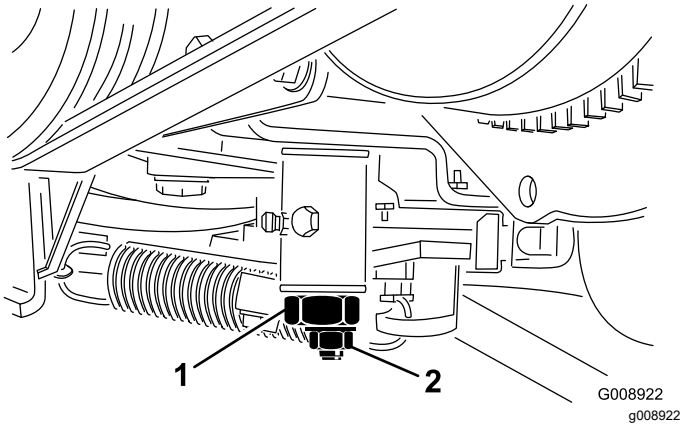

Figure 66

1. Traction adjustment cam 2. Locknut

⚠ WARNING

The engine must be running so that you can make a final adjustment of the traction adjustment cam. Contact with hot or moving parts can result in personal injury.

Keep your hands, feet, face, and other body parts away from the muffler, other hot parts of the engine, and rotating parts.

4. Start the engine and rotate the cam hex in both directions to determine the mid position of the neutral span.
5. Tighten the locknut securing the adjustment.
6. Shut off the engine.
7. Remove the support blocks and lower the machine to the shop floor. Test drive the machine to ensure that it does not move when the traction pedal is in neutral.

Cooling System Maintenance

Cooling System Safety

- Swallowing engine coolant can cause poisoning; keep out of reach from children and pets.
- Discharge of hot, pressurized coolant or touching a hot radiator and surrounding parts can cause severe burns.
  - Always allow the engine to cool at least 15 minutes before removing the radiator cap.
  - Use a rag when opening the radiator cap, and open the cap slowly to allow steam to escape.

Checking the Cooling System

Service Interval: Before each use or daily

Clean debris off the radiator daily (Figure 67). Clean the radiator hourly if conditions are extremely dusty and dirty; refer to Cleaning the Engine Cooling System (page 46).

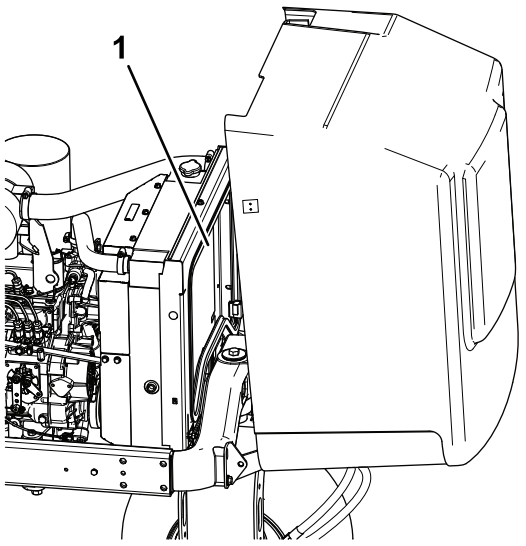

Figure 67

1. Radiator

The cooling system is filled with a 50/50 solution of water and permanent ethylene glycol antifreeze. Check the coolant level at the beginning of each day before starting the engine.

The capacity of the cooling system is approximately 5.7 L (6 US qt).

⚠ CAUTION

If the engine has been running, the pressurized, hot coolant can escape and cause burns.

- **Do not open the radiator cap when the engine is running.**
- **Use a rag when opening the radiator cap, and open the cap slowly to allow steam to escape.**

1. Park the machine on a level surface, lower the cutting units, engage the parking brake, shut off the engine, and remove the key.
2. Check the coolant level in the expansion tank (Figure 68).

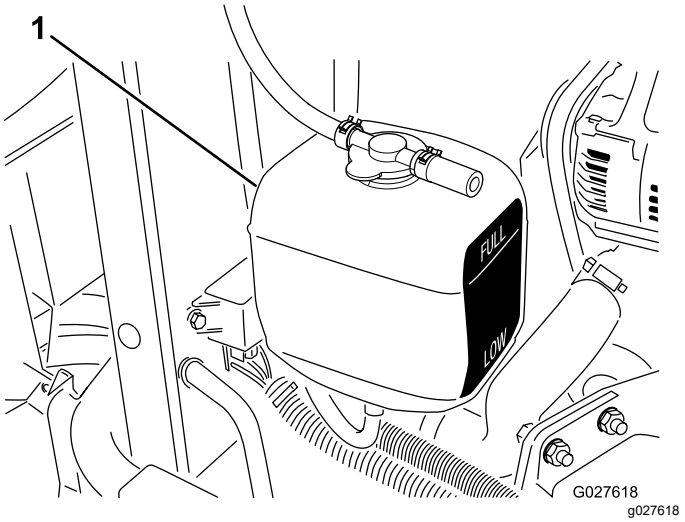

Figure 68

1. Expansion tank

Note: With a cold engine, the coolant level should be approximately midway between the marks on the side of the tank.

3. If the coolant level is low, remove the expansion tank cap and replenish the system. **Do not overfill.**
4. Install the expansion tank cap.

Cleaning the Engine Cooling System

Service Interval: Before each use or daily

Remove debris from the oil cooler and radiator daily. Clean them more frequently in dirty conditions.

1. Park the machine on a level surface, lower the cutting units, shut off the engine, engage the parking brake, and remove the key from the ignition switch.

2. Raise the hood.
3. Clean the engine area thoroughly of all debris.
4. Remove the access panel.
5. Clean both sides of the radiator area thoroughly with water or compressed air (Figure 69).

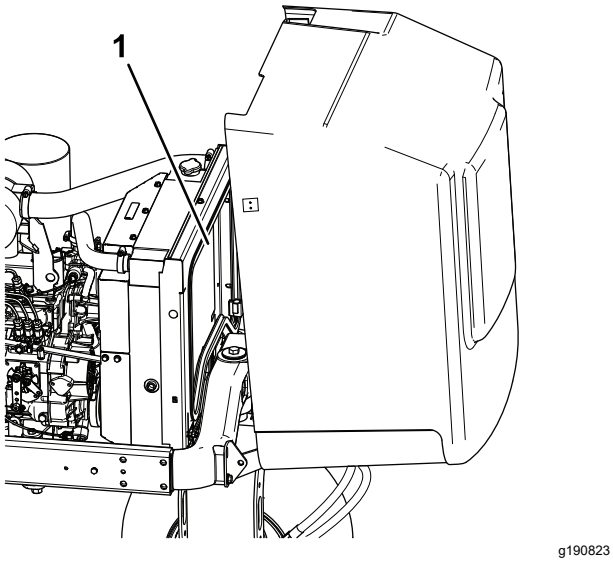

Figure 69

1. Radiator

6. Install the access panel and close the hood.

Brake Maintenance

Adjusting the Parking Brake

Service Interval: Every 200 hours—Check the parking brake adjustment.

1. Loosen the set screw that secures the knob to the parking brake lever (Figure 70).

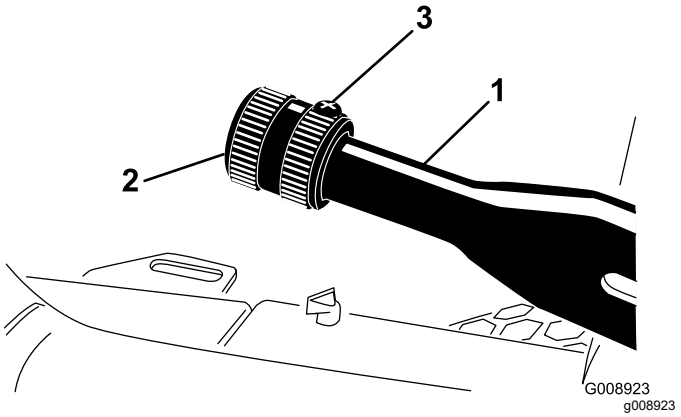

Figure 70

1. Parking brake lever
2. Knob
3. Set screw

2. Rotate the knob until you produce a force of 41 to 68 N·m (30 to 40 ft-lb) needed to actuate the lever.
3. Tighten the set screw after attaining the adjustment.

Belt Maintenance

Servicing the Engine Belts

Service Interval: After the first 10 hours—Check the condition and tension of all belts.

Every 100 hours—Check the condition and tension of all belts.

Tensioning the Alternator/Fan Belt

1. Open the hood.
2. Check the tension by depressing the alternator/fan belt midway between the alternator and crankshaft pulleys with 30 N·m (22 ft-lb) of force (Figure 71).

   Note: The belt should deflect 11 mm (7/16 inch).

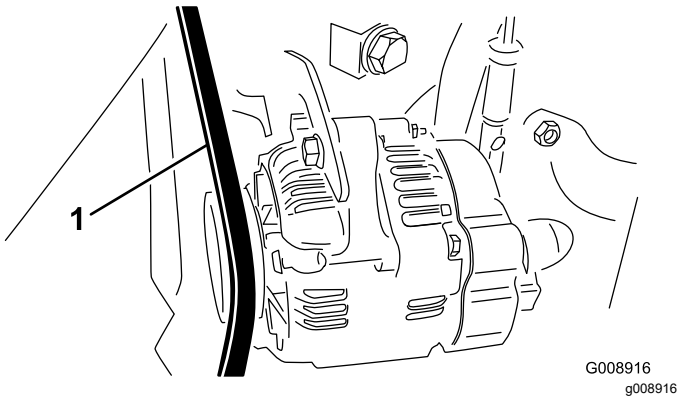

Figure 71

1. Alternator/fan belt

3. If the deflection is incorrect, complete the following procedure to tension the belt:
   A. Loosen the bolt that secures the brace to the engine and the bolt that secures the alternator to the brace.
   B. Insert a pry bar between the alternator and the engine and pry out on the alternator.
   C. When you achieve the proper belt tension, tighten the alternator and brace bolts to secure the adjustment.

Replacing the Hydrostat Drive Belt

1. Insert a nut driver or small piece of tubing onto the end of the belt tensioning spring.

   ⚠ WARNING

   Use caution when de-tensioning the spring, as it is under a heavy load.

2. Push down and forward on the spring end (Figure 72) to unhook it from the bracket and release tension on the spring.

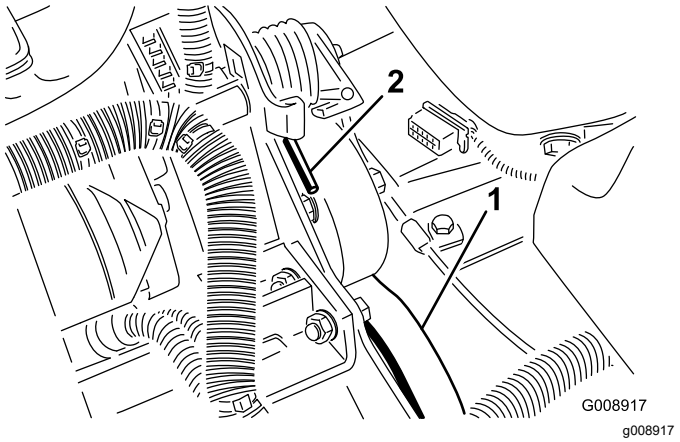

Figure 72

1. Hydrostat drive belt
2. Spring end

3. Replace the belt.
4. Reverse the procedure to tension the spring.

Controls System Maintenance

Adjusting the Throttle

1. Position the throttle lever rearward so that it stops against the control panel slot.
2. Loosen the throttle cable connector on the injection-pump lever arm (Figure 73).

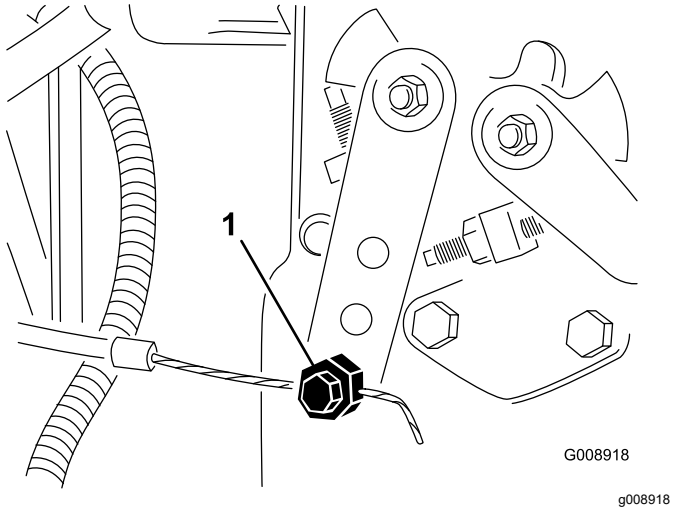

Figure 73

1. Injection-pump lever arm

3. Hold the injection-pump lever arm against the low idle stop and tighten the cable connector.
4. Loosen the screws securing the throttle control to the control panel.
5. Push the throttle control lever all the way forward.
6. Slide the stop plate until it contacts the throttle lever, and tighten the screws that secure the throttle control to the control panel.
7. If the throttle does not stay in position during operation, torque the locknut used to set the friction device on the throttle lever to 5 to 6 N·m (40 to 55 inch-lb).

   Note: The maximum force required to operate the throttle lever should be 27 N·m (20 ft-lb).

Hydraulic System Maintenance

Hydraulic System Safety

- Seek immediate medical attention if fluid is injected into skin. Injected fluid must be surgically removed within a few hours by a doctor.
- Ensure that all hydraulic-fluid hoses and lines are in good condition and all hydraulic connections and fittings are tight before applying pressure to the hydraulic system.
- Keep your body and hands away from pinhole leaks or nozzles that eject high-pressure hydraulic fluid.
- Use cardboard or paper to find hydraulic leaks.
- Safely relieve all pressure in the hydraulic system before performing any work on the hydraulic system.

Checking the Hydraulic Lines and Hoses

Service Interval: Before each use or daily

Check the hydraulic lines and hoses for leaks, kinked lines, loose mounting supports, wear, loose fittings, weather deterioration, and chemical deterioration. Make all necessary repairs before operating.

Checking the Level of the Hydraulic Fluid

Service Interval: Before each use or daily—Check the level of the hydraulic fluid.

1. Park the machine on a level surface, lower the cutting units, engage the parking brake, shut off the engine, and remove the key.
2. Clean the area around the filler neck and cap of the hydraulic-fluid tank (Figure 74) and remove the cap.

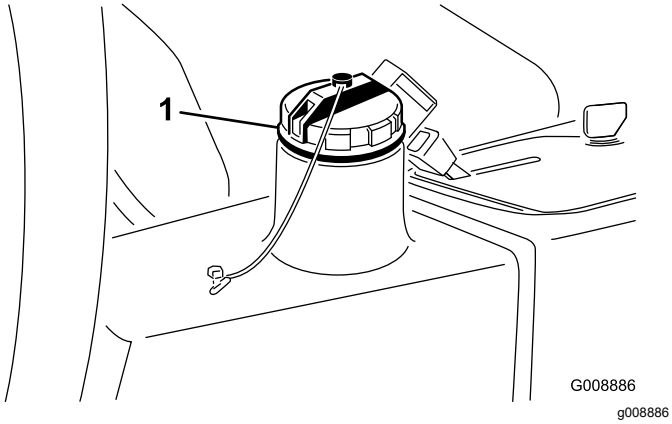

Figure 74

1. Hydraulic-fluid tank cap

3. Remove the dipstick from the filler neck and wipe it with a clean rag.
4. Insert the dipstick into the filler neck; then remove it and check the fluid level.

   Note: The fluid level should be within 6 mm (1/4 inch) of the mark on the dipstick.
5. If the level is low, add the appropriate fluid to raise the level to the full mark. Refer to Hydraulic Fluid Specifications (page 50).
6. Install the dipstick and cap onto the filler neck.

Hydraulic Fluid Specifications

The reservoir is filled at the factory with high-quality hydraulic fluid. Check the level of the hydraulic fluid before you first start the engine and daily thereafter; refer to Checking the Level of the Hydraulic Fluid (page 49).

Recommended hydraulic fluid: Toro PX Extended Life Hydraulic Fluid; available in 19 L (5 US gallon) pails or 208 L (55 US gallon) drums.

Note: A machine using the recommended replacement fluid requires less frequent fluid and filter changes.

Alternative hydraulic fluids: If Toro PX Extended Life Hydraulic Fluid is not available, you may use another conventional, petroleum-based hydraulic fluid having specifications that fall within the listed range for all the following material properties and that it meets industry standards. Do not use synthetic fluid. Consult with your lubricant distributor to identify a satisfactory product.

Note: Toro does not assume responsibility for damage caused by improper substitutions, so use products only from reputable manufacturers who will stand behind their recommendation.

High Viscosity Index/Low Pour Point Anti-wear Hydraulic Fluid, ISO VG 46

Material Properties:

Viscosity, ASTM D445	cSt @ 40°C (104°F) 44 to 48
Viscosity Index ASTM D2270	140 or higher
Pour Point, ASTM D97	-37°C to -45°C (-34°F to -49°F)
Industry Specifications:	Eaton Vickers 694 (I-286-S, M-2950-S/35VQ25 or M-2952-S)

Note: Many hydraulic fluids are almost colorless, making it difficult to spot leaks. A red dye additive for the hydraulic fluid is available in 20 ml (0.67 fl oz) bottles. A bottle is sufficient for 15 to 22 L (4 to 6 US gallons) of hydraulic fluid. Order Part No. 44-2500 from your authorized Toro distributor.

Important: **Toro Premium Synthetic Biodegradable Hydraulic Fluid is the only synthetic biodegradable fluid approved by Toro. This fluid is compatible with the elastomers used in Toro hydraulic systems and is suitable for a wide-range of temperature conditions. This fluid is compatible with conventional mineral oils, but for maximum biodegradability and performance, the hydraulic system should be thoroughly flushed of conventional fluid. The oil is available in 19 L (5 US gallons) pails or 208 L (55 US gallons) from your authorized Toro distributor.**

Hydraulic Fluid Capacity

13.2 L (3.5 US gallons); refer to Hydraulic Fluid Specifications (page 50)

Changing the Hydraulic Fluid

Service Interval: Every 2,000 hours—**If you are using the recommended hydraulic fluid,** change the hydraulic fluid.

Every 800 hours—**If you are not using the recommended hydraulic fluid or have ever filled the reservoir with an alternative fluid,** change the hydraulic fluid.

If the fluid becomes contaminated, contact your local authorized Toro distributor to flush the hydraulic system. Contaminated hydraulic fluid looks milky or black when compared to clean fluid.

1. Park the machine on a level surface, lower the cutting units, engage the parking brake, shut off the engine, and remove the key.

2. Raise the hood.
3. Disconnect the hydraulic line (Figure 75) or remove the hydraulic filter (Figure 76) and let the hydraulic fluid flow into a drain pan.

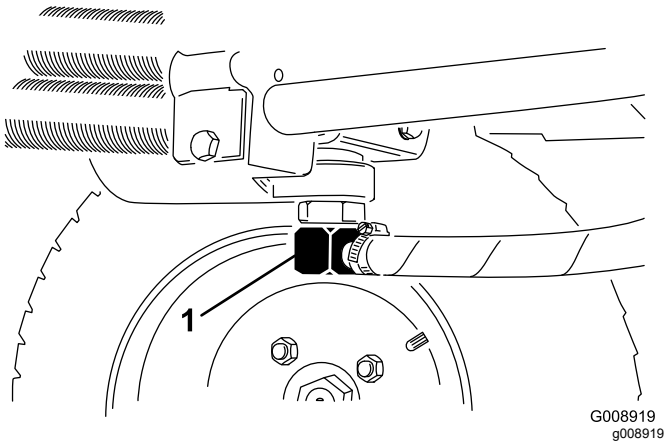

Figure 75

1. Hydraulic line

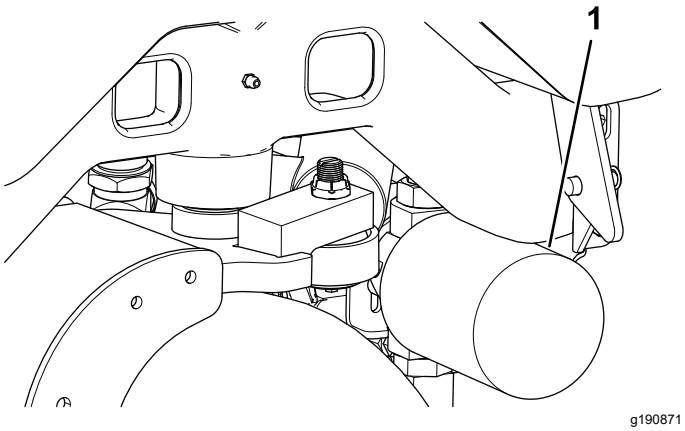

Figure 76

1. Hydraulic filter

4. Install the hydraulic line when hydraulic fluid stops draining.
5. Fill the reservoir (Figure 77) with hydraulic fluid; refer to Checking the Level of the Hydraulic Fluid (page 49).

   Important: **Use only the hydraulic fluids specified. Other fluids could damage the hydraulic system.**

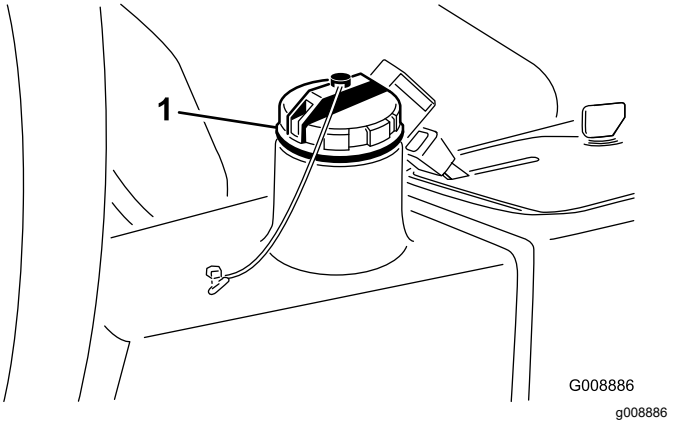

Figure 77

1. Hydraulic fill cap

6. Install the reservoir cap, start the engine, and use all of the hydraulic controls to distribute the hydraulic fluid throughout the system.
7. Check for leaks; then shut off the engine.
8. Check the fluid level and add enough to raise the level to Full mark on the dipstick. **Do not overfill.**

Replacing the Hydraulic Filter

Service Interval: Every 1,000 hours—**If you are using the recommended hydraulic fluid,** replace the hydraulic filter.

Every 800 hours—**If you are not using the recommended hydraulic fluid or have ever filled the reservoir with an alternative fluid,** replace the hydraulic filter.

Use a genuine Toro replacement filter (Part No. 54-0110).

Important: **Using any other filter may void the warranty on some components.**

1. Park the machine on a level surface, lower the cutting units, engage the parking brake, shut off the engine, and remove the key.
2. Pinch off the hose to the filter mounting plate.
3. Clean around the filter mounting area.
4. Place a drain pan under the filter (Figure 76) and remove the filter.
5. Lubricate the new filter gasket and fill the filter with hydraulic fluid.
6. Ensure that the filter mounting area is clean, screw the filter on until the gasket contacts the mounting plate, and then tighten the filter 1/2 turn.

7. Release the hose to the filter mounting plate.
8. Start the engine and let it run for about 2 minutes to purge the air from the system.
9. Shut off the engine and check for leaks.

Cutting Unit System Maintenance

Blade Safety

A worn or damaged blade or bedknife can break, and a piece could be thrown toward you or bystanders, resulting in serious personal injury or death.

- Inspect the blades and bedknives periodically for excessive wear or damage.
- Use care when checking the blades. Wear gloves and use caution when servicing them. Only replace or backlap the blades and bedknives; never straighten or weld them.
- On machines with multiple cutting units, take care when rotating a cutting unit; it can cause the reels in the other cutting units to rotate.

Checking the Reel-to-Bedknife Contact

Service Interval: Before each use or daily

Check the reel-to-bedknife contact even if the quality of cut had been acceptable previously. There must be light contact across the full length of the reel and bedknife; refer to Adjusting Reel to Bedknife in the cutting unit operator's manual.

Backlapping the Cutting Units

⚠ DANGER

Contacting the reels may cause personal injury or death.

- **Never place your hands or feet in the reel area while the engine is running.**
- **While backlapping, the reels may stall and then start again.**
- **Do not attempt to start reels again with your hand or foot.**
- **Do not adjust the reels while the engine is running.**
- **If the reel stalls, shut off the engine before attempting to clear the reel.**

1. Park the machine on a clean and level surface, lower the cutting units, shut off the engine, engage the parking brake, and remove the key from the ignition switch.

2. Remove the console cover to expose the controls.
3. Rotate the backlap control to the backlap position (R). Rotate the reel speed control to position 1 (Figure 78).

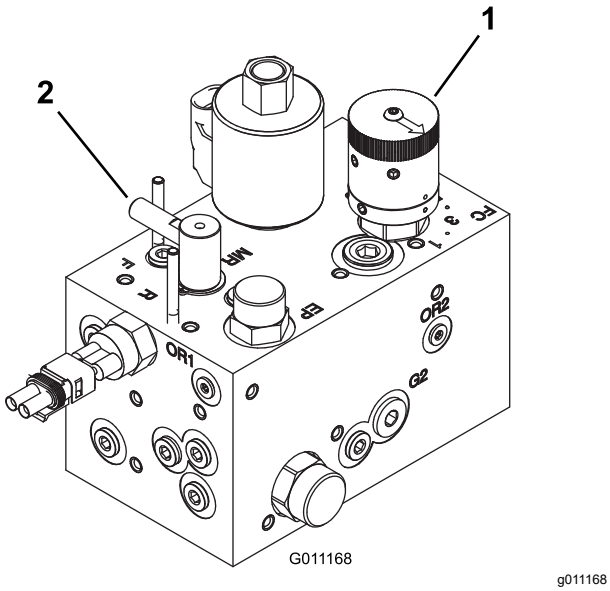

Figure 78

1. Reel speed control
2. Backlap control

Note: The seat switch is bypassed when the backlap control is in the backlap position. You do not need to be in the seat, but the parking brake must be engaged for the engine to run.

Important: **Do not rotate the backlap control from the mow position to the backlap position while engine is running. Otherwise, you may damage the reels.**

4. Make the initial reel-to-bedknife adjustments appropriate for backlapping on all cutting units. Start the engine and set it to low idle speed.
5. Engage the reels by engaging the PTO switch on the control panel.
6. Apply lapping compound with long-handled brush.
7. To adjust the cutting units while backlapping, disengage the reels and turn the engine off. After you have made the adjustments, repeat steps 4 through 6.
8. After backlapping, shut off the engine, rotate the backlap control to the mow position (F), set the reel speed controls to the desired mowing setting, and wash all the lapping compound off the cutting units.

Note: Additional instructions and procedures on backlapping are available in the Toro Reel Mower Basics (with sharpening guidelines), Form 09168SL.

Note: For a better cutting edge, run a file across the front face of the bedknife after lapping. This removes any burrs or rough edges that may have built up on the cutting edge.

Cleaning

Washing the Machine

Wash the machine as needed using water alone or with a mild detergent. You may use a rag when washing the machine.

Important: **Do not use brackish or reclaimed water to clean the machine.**

Important: **Do not use power-washing equipment to wash the machine. Power-washing equipment may damage the electrical system, loosen important decals, or wash away necessary grease at friction points. Avoid excessive use of water near the control panel, engine, and battery.**

Important: **Do not wash the machine with the engine running. Washing the machine with the engine running may result in internal engine damage.**

Storage

Storage Safety

- Before you leave the operator's position, do the following:
  - Park the machine on a level surface.
  - Disengage and lower the cutting units.
  - Engage the parking brake.
  - Shut off the engine and remove the key.
  - Wait for all movement to stop.
  - Allow the machine to cool before adjusting, servicing, cleaning, or storing it.
- Do not store the machine or fuel container where there is an open flame, spark, or pilot light, such as on a water heater or other appliance.

Preparing the Traction Unit

1. Park the machine on a level surface, lower the cutting units, engage the parking brake, shut off the engine, and remove the key.
2. Thoroughly clean the traction unit, cutting units, and the engine.
3. Check the tire pressure; refer to Checking the Tire Pressure (page 45).
4. Check all fasteners for looseness; tighten them as necessary.
5. Grease or oil all grease fittings and pivot points. Wipe up any excess lubricant.
6. Lightly sand and use touch-up paint on painted areas that are scratched, chipped, or rusted. Repair any dents in the metal body.
7. Service the battery and cables as follows; refer to Servicing the Battery (page 44):
   A. Remove the battery terminals from the battery posts.
   B. Clean the battery, terminals, and posts with a wire brush and baking-soda solution.
   C. Coat the cable terminals and battery posts with Grafo 112X skin-over grease (Toro Part No. 505-47) or petroleum jelly to prevent corrosion.
   D. Slowly charge the battery every 60 days for 24 hours to prevent lead sulfation of the battery.

Preparing the Engine

1. Drain the engine oil from the oil pan and install the drain plug.

2. Remove and discard the oil filter. Install a new oil filter.
3. Fill the engine with specified motor oil.
4. Start the engine and run it at idle speed for approximately 2 minutes.
5. Shut off the engine and remove the key.
6. Flush the fuel tank with fresh, clean fuel.
7. Secure all of the fuel-system fittings.
8. Thoroughly clean and service the air-cleaner assembly.
9. Seal the air-cleaner inlet and the exhaust outlet with weatherproof tape.
10. Check the antifreeze protection and add a 50/50 solution of water and ethylene glycol antifreeze as needed for the expected minimum temperature in your area.

Troubleshooting

Using the Standard Control Module (SCM)

The Standard Control Module is a potted electronic device produced in a one-size-fits-all configuration. The module uses solid state and mechanical components to monitor and control standard electrical features required for safe product operation.

The module monitors inputs including neutral, parking brake, PTO, start, backlap, and high temperature. The module energizes outputs including PTO, Starter, and ETR (energize to run) solenoid.

The module is divided into inputs and outputs. Inputs and outputs are identified by green LED indicators mounted on the printed circuit board.

The start circuit input is energized by 12 VDC. All other inputs are energized when the circuit is closed to ground. Each input has a LED that is illuminated when the specific circuit is energized. Use the input LEDs for switch and input circuit troubleshooting.

Output circuits are energized by an appropriate set of input conditions. The 3 outputs include PTO, ETR, and START. Output LEDs monitor relay condition indicating the presence of voltage at 1 of 3 specific output terminals.

Output circuits do not determine output device integrity, so electrical troubleshooting includes output LED inspection and conventional device and wire harness integrity testing. Measure the disconnected component impedance, the impedance through wire harness (disconnect at SCM), or by temporarily ”test energizing” the specific component.

The SCM does not connect to an external computer or handheld device, cannot be re-programmed, and does not record intermittent fault troubleshooting data.

The decal on the SCM only includes symbols. Three LED output symbols are shown in the output box. All other LEDs are inputs. The chart below identifies the symbols.

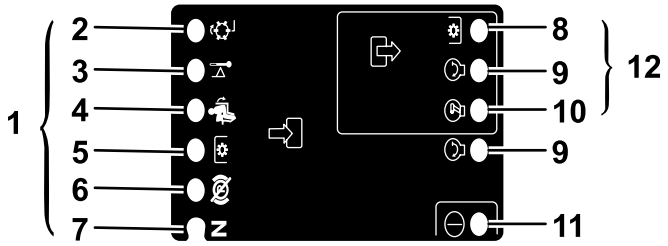

g190826

Figure 79

1. Inputs
2. Backlap
3. High temperature
4. In seat
5. PTO switch
6. Parking brake off
7. Neutral
8. PTO
9. Start
10. ETR
11. Power
12. Outputs

Here are the logical troubleshooting steps for the SCM device.

1. Determine the output fault you are trying to resolve (PTO, START, or ETR).
2. Move the key switch to the ON position and ensure that the red power LED is illuminated.
3. Move all the input switches to ensure that all LEDs change state.
4. Position the input devices at the appropriate position to achieve the appropriate output. Use the following logic chart to determine the appropriate input condition.
5. If the specific output LED is illuminated without the appropriate output function, check the output harness, connections, and component. Repair as needed.
6. If the specific output LED is not illuminated, check both fuses.

7. If the specific output LED is not illuminated and the inputs are in the appropriate condition, install a new SCM and determine if the fault disappears.

Each row (across) in the logic chart that follows identifies input and output requirements for each specific product function. The product functions are listed in the left column. The symbols identify the specific circuit condition including energized to voltage, closed to ground, and open to ground.

Logic Chart

Function	INPUTS								OUTPUTS		
	Power ON	In Neutral	Start ON	Brake ON	PTO ON	In Seat	Hi Temp	Backlap	Start	ETR	PTO
Start	—	—	+	O	O	—	O	O	+	+	O
Run (Off Unit)	—	—	O	O	O	O	O	O	O	+	O
Run (On Unit)	—	O	O	—	O	—	O	O	O	+	O
Mow	—	O	O	—	—	—	O	O	O	+	+
Backlap	—	—	O	O	—	O	O	—	O	+	+
Hi Temp	—		O				—		O	O	O

- (–) Indicates a circuit closed to ground—LED ON.
- (O) Indicates a circuit open to ground or de-energized—LED OFF.
- (+) Indicates an energized circuit (clutch coil, solenoid, or start input)—LED ON.
- A blank indicates a circuit that is not involved with the logic.

To troubleshoot, turn on the key without starting the engine. Identify the specific function that does not work and work across the logic chart. Inspect the condition of each input LEDs to ensure that it matches the logic chart.

If the input LEDs are correct, check the output LED. If the output LED is illuminated but the device is not energized, measure the available voltage at the output device, the continuity of the disconnected device, and the potential voltage on the ground circuit (floating ground). Repairs will vary depending on your findings.

EEA/UK Privacy Notice

Toro's Use of Your Personal Information

The Toro Company ("Toro") respects your privacy. When you purchase our products, we may collect certain personal information about you, either directly from you or through your local Toro company or dealer. Toro uses this information to fulfil contractual obligations - such as to register your warranty, process your warranty claim or to contact you in the event of a product recall - and for legitimate business purposes - such as to gauge customer satisfaction, improve our products or provide you with product information which may be of interest. Toro may share your information with our subsidiaries, affiliates, dealers or other business partners in connection these activities. We may also disclose personal information when required by law or in connection with the sale, purchase or merger of a business. We will never sell your personal information to any other company for marketing purposes.

Retention of your Personal Information

Toro will keep your personal information as long as it is relevant for the above purposes and in accordance with legal requirements. For more information about applicable retention periods please contact legal@toro.com.

Toro's Commitment to Security

Your personal information may be processed in the US or another country which may have less strict data protection laws than your country of residence. Whenever we transfer your information outside of your country of residence, we will take legally required steps to ensure that appropriate safeguards are in place to protect your information and to make sure it is treated securely.

Access and Correction

You may have the right to correct or review your personal data, or object to or restrict the processing of your data. To do so, please contact us by email at legal@toro.com. If you have concerns about the way in which Toro has handled your information, we encourage you to raise this directly with us. Please note that European residents have the right to complain to your Data Protection Authority.

California Proposition 65 Warning Information

What is this warning?

You may see a product for sale that has a warning label like the following:



WARNING: Cancer and Reproductive Harm—www.p65Warnings.ca.gov.

What is Prop 65?

Prop 65 applies to any company operating in California, selling products in California, or manufacturing products that may be sold in or brought into California. It mandates that the Governor of California maintain and publish a list of chemicals known to cause cancer, birth defects, and/or other reproductive harm. The list, which is updated annually, includes hundreds of chemicals found in many everyday items. The purpose of Prop 65 is to inform the public about exposure to these chemicals.

Prop 65 does not ban the sale of products containing these chemicals but instead requires warnings on any product, product packaging, or literature with the product. Moreover, a Prop 65 warning does not mean that a product is in violation of any product safety standards or requirements. In fact, the California government has clarified that a Prop 65 warning "is not the same as a regulatory decision that a product is 'safe' or 'unsafe.'" Many of these chemicals have been used in everyday products for years without documented harm. For more information, go to https://oag.ca.gov/prop65/faqs-view-all.

A Prop 65 warning means that a company has either (1) evaluated the exposure and has concluded that it exceeds the "no significant risk level"; or (2) has chosen to provide a warning based on its understanding about the presence of a listed chemical without attempting to evaluate the exposure.

Does this law apply everywhere?

Prop 65 warnings are required under California law only. These warnings are seen throughout California in a wide range of settings, including but not limited to restaurants, grocery stores, hotels, schools, and hospitals, and on a wide variety of products. Additionally, some online and mail order retailers provide Prop 65 warnings on their websites or in catalogs.

How do the California warnings compare to federal limits?

Prop 65 standards are often more stringent than federal and international standards. There are various substances that require a Prop 65 warning at levels that are far lower than federal action limits. For example, the Prop 65 standard for warnings for lead is 0.5 µg/day, which is well below the federal and international standards.

Why don't all similar products carry the warning?

- Products sold in California require Prop 65 labelling while similar products sold elsewhere do not.
- A company involved in a Prop 65 lawsuit reaching a settlement may be required to use Prop 65 warnings for its products, but other companies making similar products may have no such requirement.
- The enforcement of Prop 65 is inconsistent.
- Companies may elect not to provide warnings because they conclude that they are not required to do so under Prop 65; a lack of warnings for a product does not mean that the product is free of listed chemicals at similar levels.

Why does Toro include this warning?

Toro has chosen to provide consumers with as much information as possible so that they can make informed decisions about the products they buy and use. Toro provides warnings in certain cases based on its knowledge of the presence of one or more listed chemicals without evaluating the level of exposure, as not all the listed chemicals provide exposure limit requirements. While the exposure from Toro products may be negligible or well within the "no significant risk" range, out of an abundance of caution, Toro has elected to provide the Prop 65 warnings. Moreover, if Toro does not provide these warnings, it could be sued by the State of California or by private parties seeking to enforce Prop 65 and subject to substantial penalties.

The Toro Warranty

Two-Year or 1,500 Hours Limited Warranty

Conditions and Products Covered

The Toro Company warrants your Toro Commercial product (“Product”) to be free from defects in materials or workmanship for 2 years or 1,500 operational hours*, whichever occurs first. This warranty is applicable to all products with the exception of Aerators (refer to separate warranty statements for these products). Where a warrantable condition exists, we will repair the Product at no cost to you including diagnostics, labor, parts, and transportation. This warranty begins on the date the Product is delivered to the original retail purchaser.
* Product equipped with an hour meter.

Instructions for Obtaining Warranty Service

You are responsible for notifying the Commercial Products Distributor or Authorized Commercial Products Dealer from whom you purchased the Product as soon as you believe a warrantable condition exists. If you need help locating a Commercial Products Distributor or Authorized Dealer, or if you have questions regarding your warranty rights or responsibilities, you may contact us at:

Toro Commercial Products Service Department
8111 Lyndale Avenue South
Bloomington, MN 55420-1196

952–888–8801 or 800–952–2740
E-mail: commercial.warranty@toro.com

Owner Responsibilities

As the product owner, you are responsible for required maintenance and adjustments stated in your *Operator's Manual*. Repairs for product issues caused by failure to perform required maintenance and adjustments are not covered under this warranty.

Items and Conditions Not Covered

Not all product failures or malfunctions that occur during the warranty period are defects in materials or workmanship. This warranty does not cover the following:

- Product failures which result from the use of non-Toro replacement parts, or from installation and use of add-on, or modified non-Toro branded accessories and products.
- Product failures which result from failure to perform recommended maintenance and/or adjustments.
- Product failures which result from operating the Product in an abusive, negligent, or reckless manner.
- Parts consumed through use that are not defective. Examples of parts which are consumed, or used up, during normal Product operation include, but are not limited to, brake pads and linings, clutch linings, blades, reels, rollers and bearings (sealed or greasable), bed knives, spark plugs, castor wheels and bearings, tires, filters, belts, and certain sprayer components such as diaphragms, nozzles, flow meters, and check valves.
- Failures caused by outside influence, including, but not limited to, weather, storage practices, contamination, use of unapproved fuels, coolants, lubricants, additives, fertilizers, water, or chemicals.
- Failure or performance issues due to the use of fuels (e.g. gasoline, diesel, or biodiesel) that do not conform to their respective industry standards.
- Normal noise, vibration, wear and tear, and deterioration. Normal “wear and tear” includes, but is not limited to, damage to seats due to wear or abrasion, worn painted surfaces, scratched decals or windows.

Parts

Parts scheduled for replacement as required maintenance are warranted for the period of time up to the scheduled replacement time for that part. Parts replaced under this warranty are covered for the duration of the original product warranty and become the property of Toro. Toro will make the final decision whether to repair any existing part or assembly or replace it. Toro may use remanufactured parts for warranty repairs.

Deep Cycle and Lithium-Ion Battery Warranty

Deep cycle and Lithium-Ion batteries have a specified total number of kilowatt-hours they can deliver during their lifetime. Operating, recharging, and maintenance techniques can extend or reduce total battery life. As the batteries in this product are consumed, the amount of useful work between charging intervals will slowly decrease until the battery is completely worn out. Replacement of worn out batteries, due to normal consumption, is the responsibility of the product owner.
Note: (Lithium-Ion battery only): Refer to the battery warranty for additional information.

Lifetime Crankshaft Warranty (ProStripe 02657 Model Only)

The Prostripe which is fitted with a genuine Toro Friction Disc and Crank-Safe Blade Brake Clutch (integrated Blade Brake Clutch (BBC) + Friction Disc assembly) as original equipment and used by the original purchaser in accordance with recommended operating and maintenance procedures, are covered by a Lifetime Warranty against engine crankshaft bending. Machines fitted with friction washers, Blade Brake Clutch (BBC) units and other such devices are not covered by the Lifetime Crankshaft Warranty.

Maintenance is at Owner’s Expense

Engine tune-up, lubrication, cleaning and polishing, replacement of filters, coolant, and completing recommended maintenance are some of the normal services Toro products require that are at the owner’s expense.

General Conditions

Repair by an Authorized Toro Distributor or Dealer is your sole remedy under this warranty.

The Toro Company is not liable for indirect, incidental or consequential damages in connection with the use of the Toro Products covered by this warranty, including any cost or expense of providing substitute equipment or service during reasonable periods of malfunction or non-use pending completion of repairs under this warranty. Except for the Emissions warranty referenced below, if applicable, there is no other express warranty. All implied warranties of merchantability and fitness for use are limited to the duration of this express warranty.

Some states do not allow exclusions of incidental or consequential damages, or limitations on how long an implied warranty lasts, so the above exclusions and limitations may not apply to you. This warranty gives you specific legal rights, and you may also have other rights which vary from state to state.

Note Regarding Emissions Warranty

The Emissions Control System on your Product may be covered by a separate warranty meeting requirements established by the U.S. Environmental Protection Agency (EPA) and/or the California Air Resources Board (CARB). The hour limitations set forth above do not apply to the Emissions Control System Warranty. Refer to the Engine Emission Control Warranty Statement supplied with your product or contained in the engine manufacturer’s documentation.

Countries Other than the United States or Canada

Customers who have purchased Toro products exported from the United States or Canada should contact their Toro Distributor (Dealer) to obtain guarantee policies for your country, province, or state. If for any reason you are dissatisfied with your Distributor's service or have difficulty obtaining guarantee information, contact your Authorized Toro Service Center.