Form No. 3437-376 Rev B

Count on it.

Operator's Manual

ProCore® 648 Aerator

Model No. 09200—Serial No. 405700000 and Up

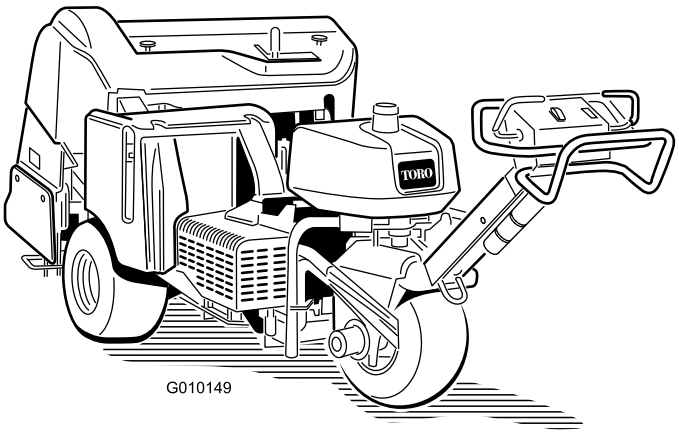

Register at www.Toro.com.
Original Instructions (EN)

CE

3437-376

This product complies with all relevant European directives; for details, please see the separate product specific Declaration of Conformity (DOC) sheet.

Because in some areas there are local, state, or federal regulations requiring that a spark arrester be used on the engine of this machine, a spark arrester is available as an option. If you require a spark arrester, contact your authorized Toro distributor. Genuine Toro spark arresters are approved by the USDA Forestry Service.

The enclosed engine owner's manual is supplied for information regarding the US Environmental Protection Agency (EPA) and the California Emission Control Regulation of emission systems, maintenance, and warranty. Replacements may be ordered through the engine manufacturer.

⚠ WARNING

CALIFORNIA
Proposition 65 Warning

The engine exhaust from this product contains chemicals known to the State of California to cause cancer, birth defects, or other reproductive harm.

Battery posts, terminals, and related accessories contain lead and lead compounds, chemicals known to the State of California to cause cancer and reproductive harm. Wash hands after handling.

Introduction

A walking operator controls this machine, and it is intended to be used by professional, hired operators in commercial applications. The machine is designed primarily for aerating large areas on well-maintained lawns in parks, golf courses, sports fields, and on commercial grounds.

Read this information carefully to learn how to operate and maintain your product properly and to avoid injury and product damage. You are responsible for operating the product properly and safely.

Visit www.Toro.com for product safety and operation training materials, accessory information, help finding a dealer, or to register your product.

Whenever you need service, genuine Toro parts, or additional information, contact an Authorized Service Dealer or Toro Customer Service and have the model and serial numbers of your product ready. Figure 1 identifies the location of the model and serial numbers on the product. Write the numbers in the space provided.

Important: **With your mobile device, you can scan the QR code (if equipped) on the serial number plate to access warranty, parts, and other product information.**

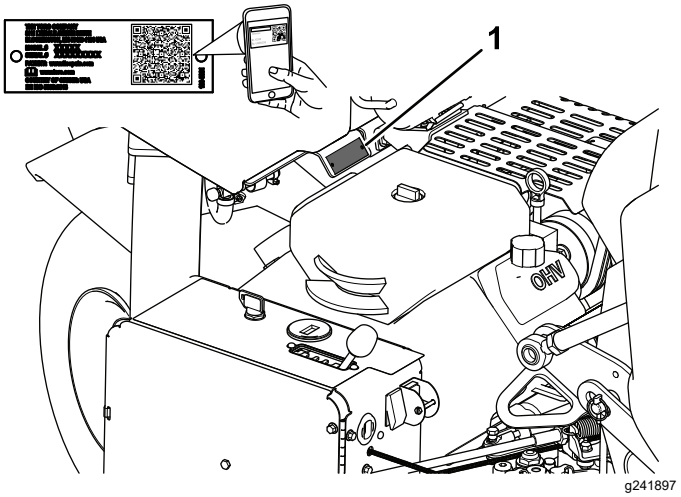

Figure 1

1. Model and serial number location

Model No. _____

Serial No. _____

This manual identifies potential hazards and has safety messages identified by the safety-alert symbol (Figure 2), which signals a hazard that may cause serious injury or death if you do not follow the recommended precautions.

g000502

Figure 2
Safety-alert symbol

This manual uses 2 words to highlight information. **Important** calls attention to special mechanical information and **Note** emphasizes general information worthy of special attention.

© 2020—The Toro® Company
8111 Lyndale Avenue South
Bloomington, MN 55420

Contact us at www.Toro.com.
Printed in the USA
All Rights Reserved

Contents

Safety 4
General Safety 4
Safety and Instructional Decals 4
Setup 9
1 Installing the Rear Wheels 10
2 Installing the Handle 10
3 Activating and Charging the Battery 10
4 Securing the Rear Hood (CE Only) 12
5 Securing the Belt Cover (CE Only) 13
6 Applying the CE Decal and the Production Year Decal 14
7 Installing the Tine Holders, Turf Guards, and Tines 14
Product Overview 15
Controls 15
Specifications 18
Attachments/Accessories 18
Before Operation 19
Before Operation Safety 19
Adding Fuel 19
Performing Daily Maintenance 20
The Safety Interlock System 20
During Operation 20
During Operation Safety 20
Slope Safety 21
Starting the Engine 21
Shutting Off the Engine 21
Using the Machine 21
Setting the Coring Depth 22
Using the Line Marker 22
Supporting the Coring Head with the Service Latch 22
Setting Up Manual Ground Following 23
Installing Tine Holders, Turf Guards, and Tines 24
Replacing Tines 25
Adjusting the Weight Transfer 25
Adding Additional Weight 26
Pushing/Pulling the Machine by Hand 26
Resetting the System Control Circuit 26
Moving the Machine when the Coring Head is Lowered 27
Operating Tips 27
After Operation 29
After Operation Safety 29
Cleaning the Machine 29
Locating the Tie-Down Points 30
Hauling the Machine 30
Maintenance 31
Maintenance Safety 31
Recommended Maintenance Schedule(s) 31
Daily Maintenance Checklist 32
Pre-Maintenance Procedures 33
Lifting the Machine 33
Lubrication 34
Checking the Coring Head Bearings 34
Engine Maintenance 35
Engine Safety 35
Servicing the Air Cleaner 35
Engine Oil Specification 36
Checking the Engine-Oil Level 36
Changing the Engine Oil and Filter 36
Servicing the Spark Plugs 37
Cleaning the Engine Screen 38
Fuel System Maintenance 38
Replacing the Fuel Filter 38
Draining the Fuel Tank 39
Electrical System Maintenance 39
Electrical System Safety 39
Servicing the Battery 39
Checking the Fuses 40
Aerator Control Module (ACM) 41
Drive System Maintenance 42
Checking the Tire Pressure 42
Adjusting the Traction Drive for Neutral 42
Belt Maintenance 43
Adjusting the Pump Belt 43
Inspecting the Belts 43
Controls System Maintenance 44
Resetting the Ground Following System 44
Hydraulic System Maintenance 45
Hydraulic System Safety 45
Checking the Hydraulic Lines 45
Hydraulic Fluid Specification 45
Checking the Hydraulic-Fluid Level 45
Changing the Hydraulic Fluid and Filters 46
Hydraulic System Test Ports 47
Aerator Maintenance 47
Checking the Fastener Torque 47
Adjusting the Side Shields 47
Replacing the Turf Guards 48
Adjusting Hole Spacing 48
Coring Head Timing 49
Storage 49
Troubleshooting 51

Safety

General Safety

This product is capable of causing personal injury. Always follow all safety instructions to avoid serious personal injury.

Using this product for purposes other than its intended use could prove dangerous to you and bystanders.

- Read and understand the contents of this *Operator's Manual* before starting the engine.
- Use your full attention while operating the machine. Do not engage in any activity that causes distractions; otherwise, injury or property damage may occur.
- Do not put your hands or feet near moving components of the machine.
- Do not operate the machine without all guards and other safety protective devices in place and working on the machine.
- Keep the machine away from bystanders while it is moving.
- Keep clear of any discharge opening. Keep bystanders and pets away from the machine.
- Keep children out of the operating area. Never allow children to operate the machine.
- Stop the machine, shut off the engine, engage the parking brake, remove the key, and wait for all moving parts to stop before servicing, fueling, or unclogging the machine.

Improperly using or maintaining this machine can result in injury. To reduce the potential for injury, comply with these safety instructions and always pay attention to the safety-alert symbol ⚠, which means Caution, Warning, or Danger—personal safety instruction. Failure to comply with these instructions may result in personal injury or death.

Safety and Instructional Decals

Safety decals and instructions are easily visible to the operator and are located near any area of potential danger. Replace any decal that is damaged or missing.

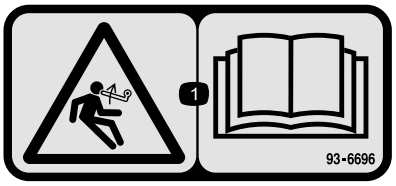

decal93-6696

93–6696

1. Stored energy hazard—read the *Operator's Manual*.

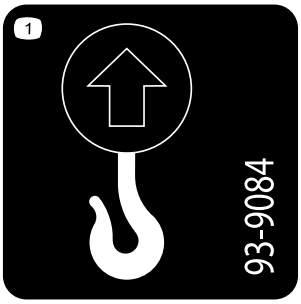

decal93-9084

93-9084

1. Lift point
2. Tie-down point

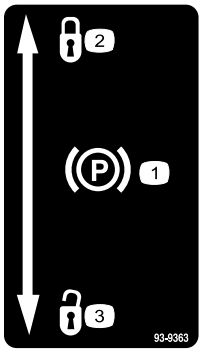

decal93-9363

93-9363

1. Parking brake
2. Locked
3. Unlocked

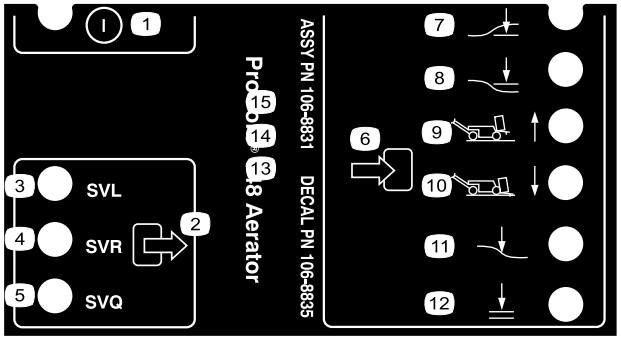

decal106-8835

106-8835

1. On/off
2. Output
3. Solenoid valve lower
4. Solenoid valve raise
5. Solenoid valve quick
6. Input
7. Head low
8. Head high
9. Transport (1)
10. Aerate (4)
11. Ground following
12. OK to lower

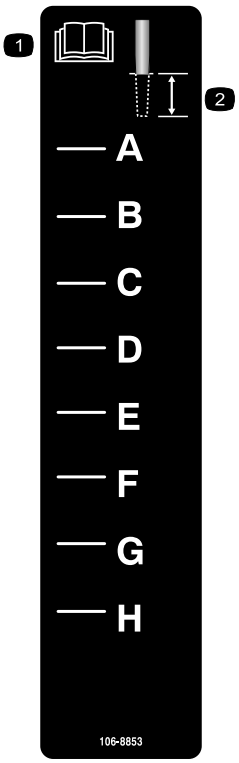

decal106-8853

106-8853

1. Read the *Operator's Manual*.
2. Coring depth

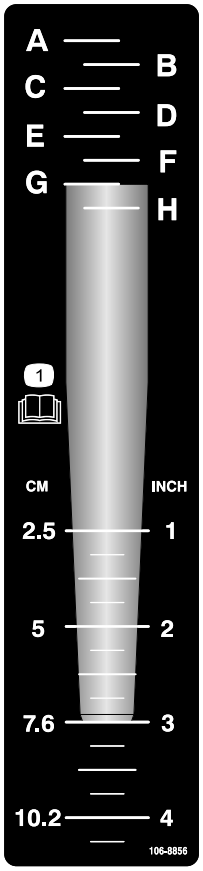

decal106-8856

106-8856

1. Read the *Operator's Manual.*

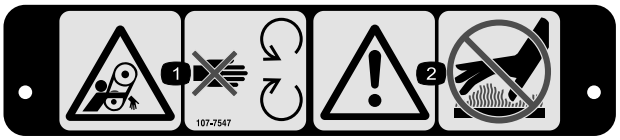

decal107-7547

107-7547

1. Entanglement hazard, belt—stay away from moving parts.
2. Warning—Do not touch the hot surfaces

decal107-7555

107-7555

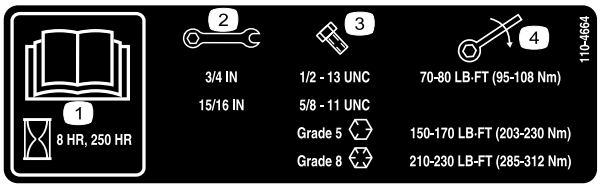

decal110-4664

110-4664

1. Read the *Operator's Manual.*
2. Wrench size
3. Bolt size
4. Torque

---

decalbatterysymbols

Battery Symbols

Some or all of these symbols are on your battery.

1. Explosion hazard
2. No fire, open flame, or smoking
3. Caustic liquid/chemical burn hazard
4. Wear eye protection.
5. Read the *Operator's Manual*.
6. Keep bystanders away from the battery.
7. Wear eye protection; explosive gases can cause blindness and other injuries.
8. Battery acid can cause blindness or severe burns.
9. Flush eyes immediately with water and get medical help fast.
10. Contains lead; do not discard

---

decal133-8062

133-8062

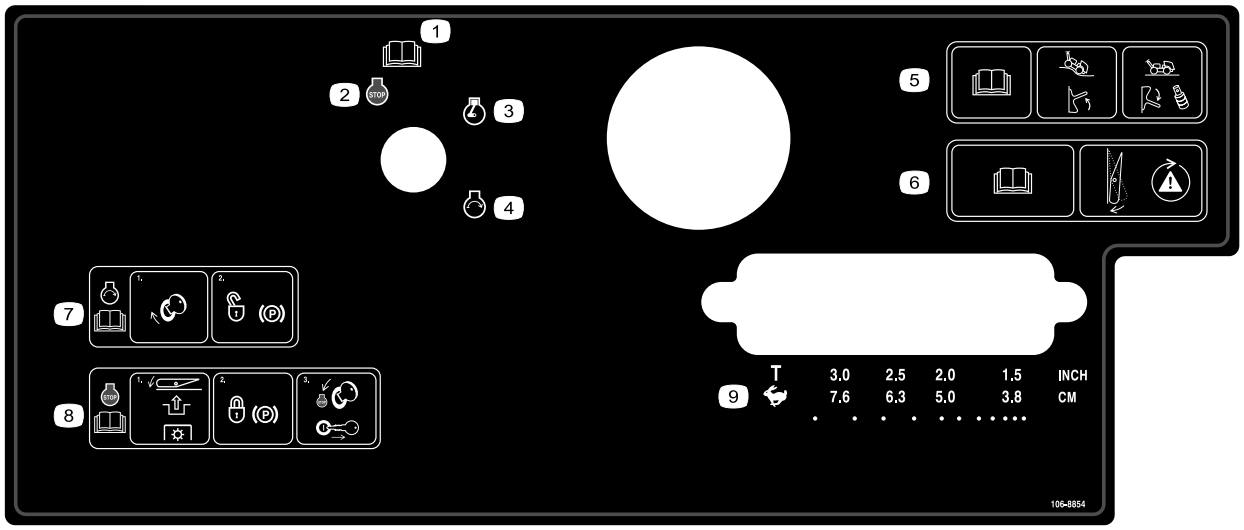

decal106-8854

106-8854

1. Read the *Operator's Manual*.
2. Engine—shut off
3. Engine—run
4. Engine—start
5. Read the *Operator's Manual*; move the switch up to turn ground following on; move the switch down and install the spacers to turn ground following off.
6. Read the *Operator's Manual*; press the switch to test the safety system.
7. To start the engine, turn the ignition key and unlock the parking brake; read the *Operator's Manual*.
8. To shut off the engine, press the switch to disengage the PTO, lock the parking brake, and turn the ignition key to the Stop position and remove it; read the *Operator's Manual*.
9. Transport or hole spacing selection

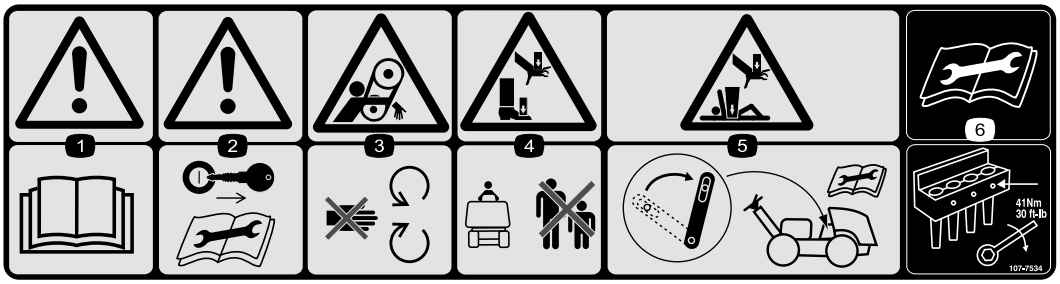

decal107-7534

107-7534

1. Warning—read the *Operator's Manual*.
2. Warning—remove the key before performing maintenance.
3. Entanglement hazard, belt—stay away from moving parts.
4. Crushing hazard of the hand or foot—keep bystanders away.
5. Crushing hazard of the hand or body—engage the service latch before performing maintenance.
6. Read the *Operator's Manual* before performing maintenance—torque the tine bolts to 41 N·m (30 ft-lb).

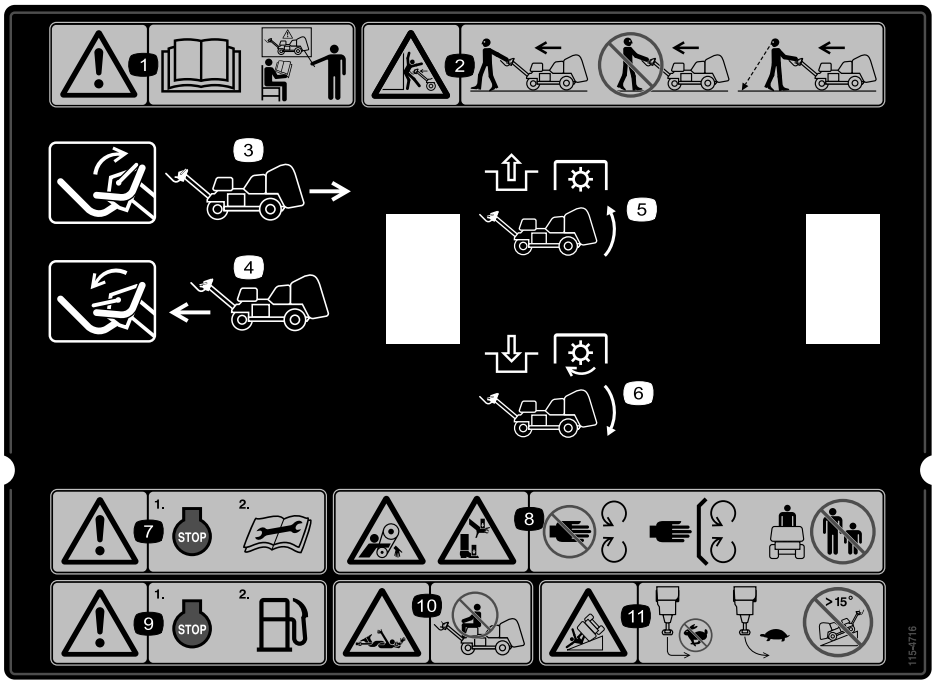

decal115-4716

115-4716

1. Warning—read the *Operator's Manual*; do not operate this machine unless you are trained.
2. Crushing hazard—walk in front and face forward while operating the machine; do not walk backwards and face away when operating the machine; look behind you when walking backwards while operating the machine.
3. Move the bail up to drive in reverse.
4. Move the bail down to drive forward.
5. Disengage the PTO and raise the head
6. Engage the PTO and lower the head
7. Warning—shut off the engine before performing maintenance.
8. Entanglement hazard, belt; crushing hazard of hand or foot—stay away from moving parts, keep all guards and shields in place; keep bystanders away.
9. Warning—shut off the engine before fueling.
10. Entanglement hazard, shaft—do not carry passengers.
11. Tipping hazard—do not turn sharply while traveling fast; drive slowly when turning; do not drive the machine on a slope greater than 15°.

Setup

Loose Parts

Use the chart below to verify that all parts have been shipped.

Procedure	Description	Qty.	Use
1	Wheel assembly	2	Install the rear wheels.
2	Locknut (1/2 inch) Cable guide Bolt (5/16 x 1/2 inch)	3 1 2	Install the handle.
3	Bolt (1/4 x 1 inch) Flange nut (5/16 inch)	2 2	Activate and charge the battery.
4	Latch lock Tap bolt Internal tooth lock washer	2 2 2	Securing the rear hood (CE only).
5	Lanyard Pop rivet Bolt (1/4 x 1 inch) Locknut (1/4 inch)	1 1 1 1	Secure the belt cover (CE only).
6	CE decal Production year decal	1 1	Apply the CE decal and the production year decal.
7	No parts required	–	Install the tine holders, turf guards, and tines.

Media and Additional Parts

Description	Qty.	Use
Ignition key	2	Start the machine
Turf guard clamp Flange nut	4 12	Install the turf guards.
Operator's Manual Engine owner's manual	1 1	Read before operating the machine.
Declaration of conformity	1	CE certification
Pre-delivery checklist	1	Ensure that all setup procedures have been completed before delivery.

Note: The front of the machine is located at the operator handle, and is the normal operator position. Left and right are in relation to the direction of travel as you walk with machine following you.

Note: To raise the coring head after uncrating the machine, start the engine and press the Reset button. Refer to Starting the Engine (page 21) and Resetting the System Control Circuit (page 26) for more information.

1

Installing the Rear Wheels

Parts needed for this procedure:

2	Wheel assembly

Procedure

1. Remove the 8 lug nuts securing the rear of the machine to the packaging.
2. Mount a wheel assembly onto each rear wheel hub (Figure 3).

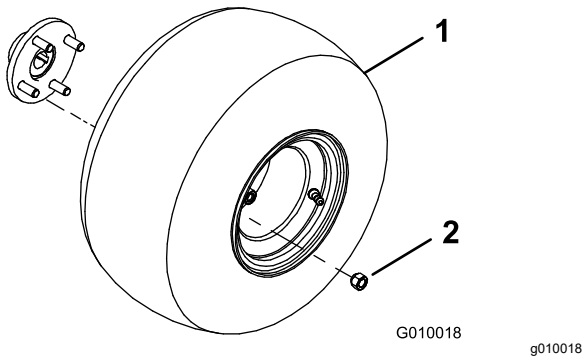

Figure 3

1. Wheel assembly
2. Lug nut

3. Install the lug nuts (Figure 3) and tighten them to 61 to 75 N·m (45 to 55 ft-lb).
4. Deflate all tires to 83 kPa (12 psi).

2

Installing the Handle

Parts needed for this procedure:

3	Locknut (1/2 inch)
1	Cable guide
2	Bolt (5/16 x 1/2 inch)

Procedure

1. Carefully rotate the handle to the front of the machine. Use caution not to damage the cables.
2. Insert the handle mounting studs into the holes in the fork (Figure 4).

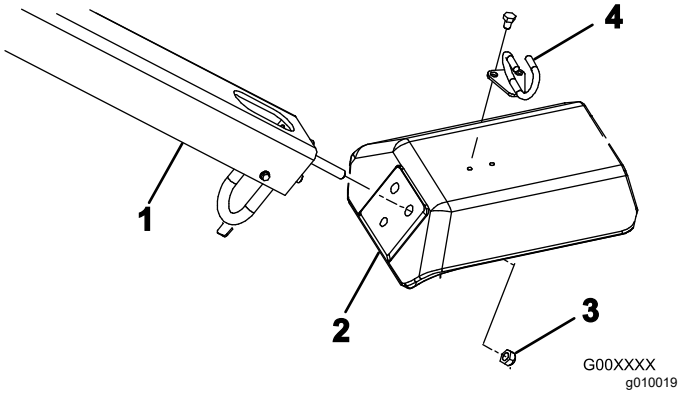

Figure 4

1. Handle
2. Fork
3. Locknut
4. Cable guide

3. Secure handle studs to fork (Figure 4) with 3 locknuts (1/2 inch).
4. Insert the cable guide around the cables.
5. Mount the cable guide to the top of the fork (Figure 4) with 2 bolts (5/16 x 1/2 inch).

3

Activating and Charging the Battery

Parts needed for this procedure:

2	Bolt (1/4 x 1 inch)
2	Flange nut (5/16 inch)

Procedure

1. Unlatch and open the battery compartment cover.
2. Remove the battery from the battery compartment (Figure 5).

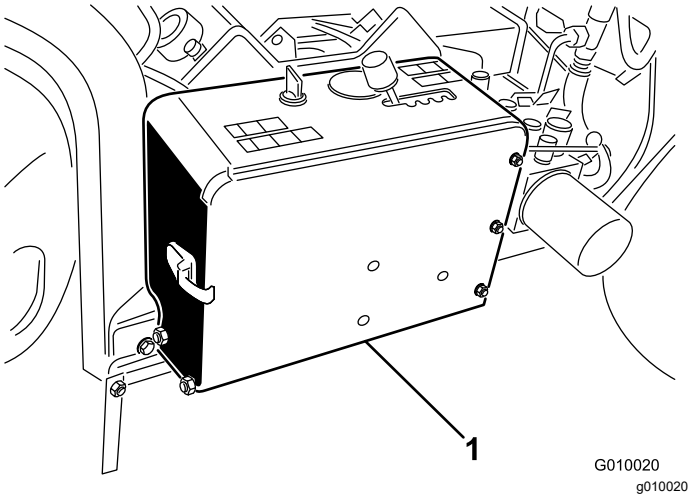

Figure 5

1. Battery compartment

3. Clean the top of the battery and remove the vent caps.
4. Carefully fill each cell with electrolyte until the plates are covered with about 6 mm (1/4 inch) of fluid.

   Use only electrolyte (1.265 specific gravity) to fill the battery initially.

   Important: **Do not add electrolyte while the battery is in the machine. You could spill it, causing corrosion.**

   ⚠ DANGER

   Battery electrolyte contains sulfuric acid which is fatal if consumed and causes severe burns.

   - **Do not drink electrolyte and avoid contact with skin, eyes, or clothing. Wear safety glasses to shield your eyes and rubber gloves to protect your hands.**
   - **Fill the battery where clean water is always available for flushing the skin.**

5. Wait 20 to 30 minutes to allow all trapped gas to escape from the plates. Refill as necessary to bring the electrolyte to within about 6 mm (1/4 inch) of the bottom of the fill well.
6. Use a battery charger with a 3 to 4 A charging capacity, charge the battery at a 3 to 4 A rate until the specific gravity is 1.250 or higher and the temperature is at least 16° C (60° F) with all cells gassing freely.

   ⚠ WARNING

   Charging the battery produces gasses that can explode.

   Never smoke near the battery and keep sparks and flames away from it.

7. When the battery is charged, disconnect the charger from the electrical outlet and battery posts.

   Note: After activating the battery, add only distilled water to replace normal loss; although maintenance-free batteries should not require water under normal operating conditions.

8. Insert the battery into the tray in the battery compartment (Figure 6). Position the battery so the terminals are to the outside.

   ⚠ WARNING

   Battery terminals or metal tools could short against metal machine components, causing sparks. Sparks can cause the battery gasses to explode, resulting in personal injury.

   - **When removing or installing the battery, do not allow the battery terminals to touch any metal parts of the machine.**
   - **Do not allow metal tools to short between the battery terminals and metal parts of the machine.**

9. Secure the battery to the compartment base with a battery rod, 2 hold down rods, 2 flat washers, and 2 wing nuts (Figure 6).

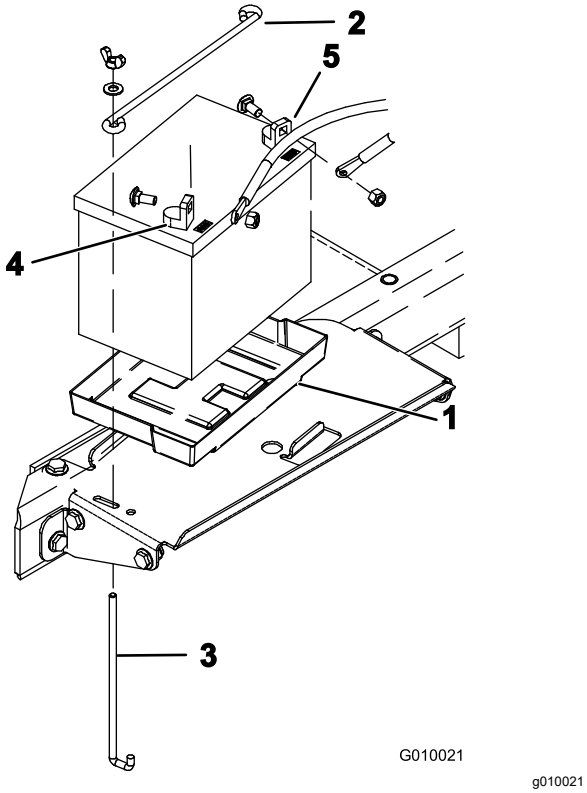

Figure 6

1. Battery tray
2. Battery hold down
3. Hold down rod
4. Positive terminal (+)
5. Negative terminal (–)

10. First, secure the positive cable (red) to the positive (+) battery terminal with a carriage bolt and nut (Figure 6), then the negative cable (black) to the negative (–) terminal of the battery with a carriage bolt and nut (Figure 6). Slide the rubber boot over the positive terminal to prevent a possible short from occurring.

    Important: **Ensure that there is clearance between the battery cables and the speed selector lever. Verify that the speed selector lever does not come within 1 inch (2.5 cm) of either battery cable when it is moved through its entire range of motion. Do not wire tie or tape the negative and positive battery cables together.**

⚠ WARNING

Incorrect battery cable routing could damage the machine and cables, causing sparks. Sparks can cause the battery gasses to explode, resulting in personal injury.

- **Always *disconnect* the negative (black) battery cable before disconnecting the positive (red) cable.**
- **Always *connect* the positive (red) battery cable before connecting the negative (black) cable.**

11. Close and latch the battery compartment cover.

4

Securing the Rear Hood (CE Only)

Parts needed for this procedure:

2	Latch lock
2	Tap bolt
2	Internal tooth lock washer

Procedure

If you are setting up this machine for use in the European Union (CE), secure the rear hood as follows to comply with CE regulations.

1. Install a latch lock over the left and right hood latches (Figure 7) with a tap bolt (2 total).

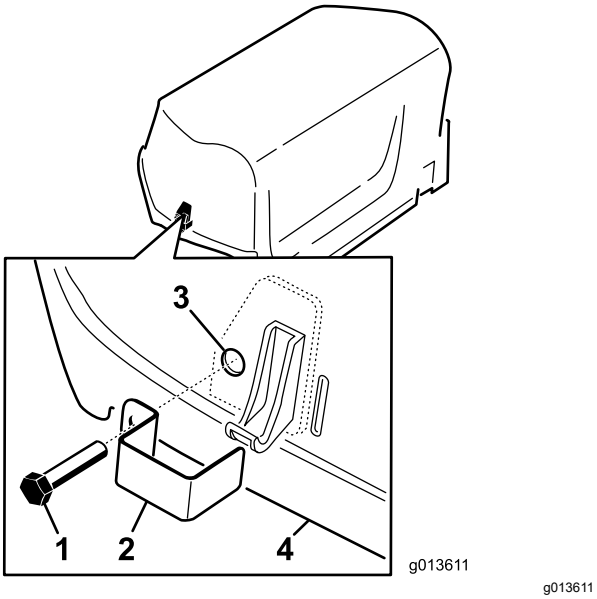

Figure 7

1. Tap bolt
2. Latch lock
3. Internal lock washer (inside of hood)
4. Hood

2. Using a pliers or adjustable wrench, thread an internal lock washer onto each bolt (1 to 2 threads) to secure the bolts (Figure 7).

5

Securing the Belt Cover (CE Only)

Parts needed for this procedure:

1	Lanyard
1	Pop rivet
1	Bolt (1/4 x 1 inch)
1	Locknut (1/4 inch)

Procedure

If you are setting up this machine to be compliant with CE, secure the belt cover as follows.

1. Locate the hole in the belt cover next to the latch lever (Figure 8 and Figure 9).

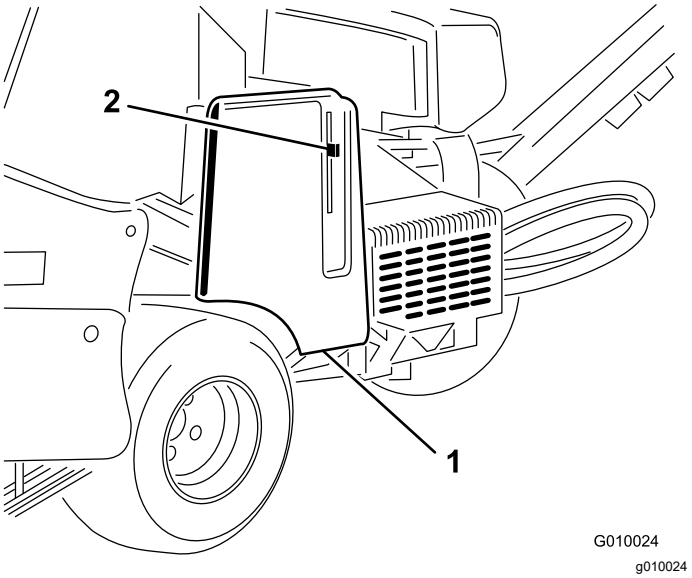

Figure 8

1. Belt cover
2. Latch lever

2. Using the hole in the belt cover, install the lanyard assembly with a pop rivet (Figure 9).

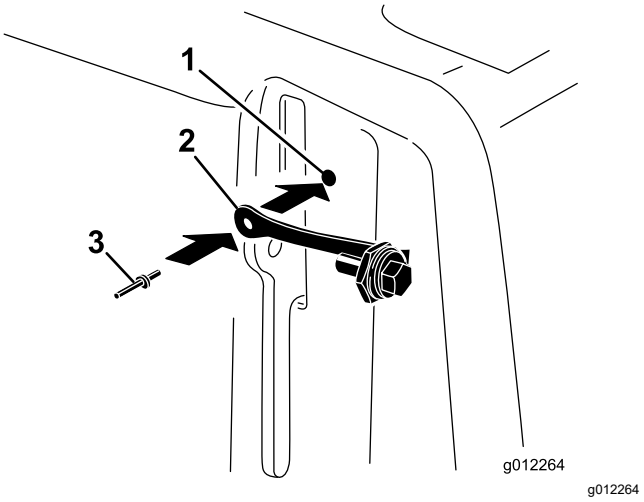

Figure 9

1. Belt cover hole
2. Lanyard
3. Pop rivet

3. Thread the bolt into the latch lever (Figure 10).

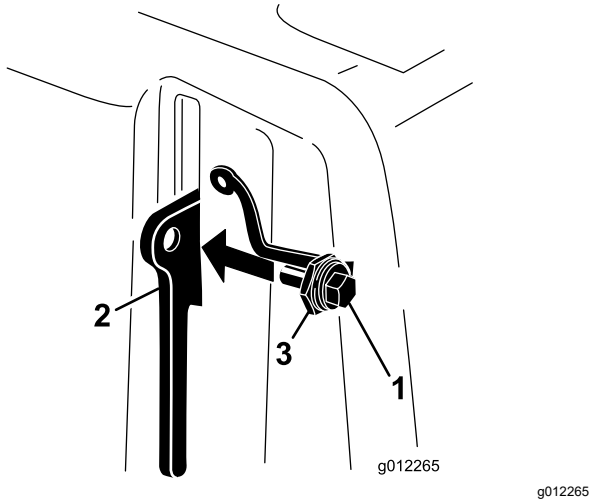

Figure 10

1. Bolt
2. Latch lever
3. Nut

6

Applying the CE Decal and the Production Year Decal

CE Only

Parts needed for this procedure:

1	CE decal
1	Production year decal

Procedure

After completing all the necessary CE requirements, apply the CE decal and the production year decal to the fork leg (Figure 11).

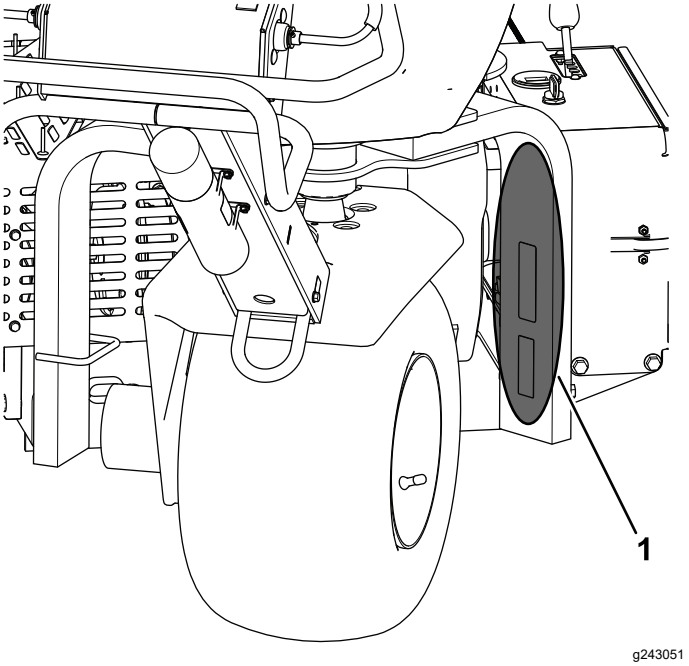

Figure 11

1. Apply the decals here.

7

Installing the Tine Holders, Turf Guards, and Tines

No Parts Required

Procedure

A wide selection of tine holders, turf guards, and tines are available for the machine. Install the setup appropriate for your application as described in Installing Tine Holders, Turf Guards, and Tines (page 24).

Product Overview

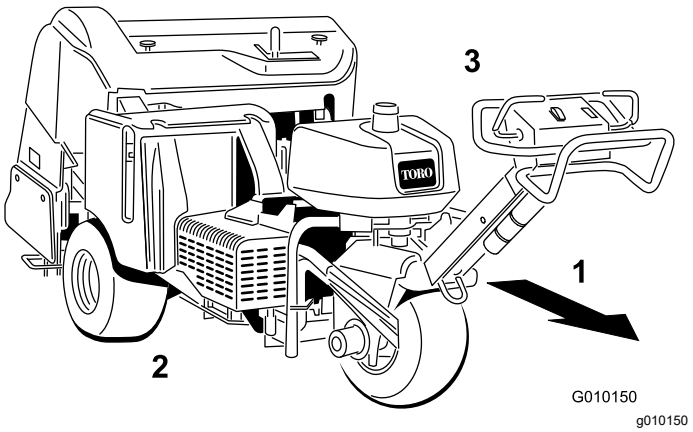

Figure 12

1. Forward (operating direction)
2. Right side
3. Left side

Controls

Become familiar with all the controls before you start the engine and operate the machine.

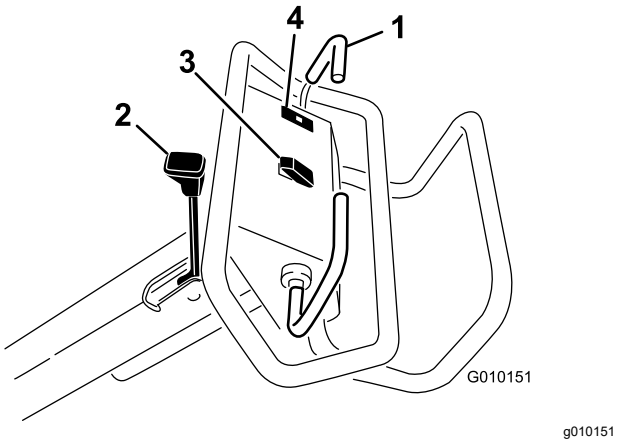

Figure 13

1. Traction bail
2. Parking-brake lever
3. Raise, lower/engage switch
4. Oil-pressure warning light

Traction Bail

To move forward, move the traction bail forward. To move rearward, move the traction bail rearward (Figure 13).

- The farther you move the traction bail, the faster the machine moves.
- To stop the machine, release both traction bails.

Parking-Brake Lever

Important: **Always engage the parking brake when you stop the machine or leave it unattended.**

- To engage the parking brake, move the parking-brake lever toward the operator handle (Figure 13).

  Note: You may need to move the machine forward or backward slightly when engaging the parking brake.
- To disengage the parking brake, move the parking-brake lever away from the operator handle.

  Note: You may need to move the machine forward or backward slightly when disengaging the parking brake.

Oil-Pressure Warning Light

The oil-pressure warning light (Figure 13) illuminates when the engine-oil pressure drops below a safe level. If low oil pressure ever occurs, shut off the engine and determine the cause. Repair the damage before starting the engine again.

Raise, Lower/Engage Switch

Raise—Press the top of the switch (Figure 13) to raise the coring head and disengage the coring head. The engine must be running to generate lift pressure. If the coring head is below the transport height, refer to Resetting the System Control Circuit (page 26).

Lower/Engage—Press the bottom of the switch (Figure 13) to lower and engage the coring head. The traction bail must be in the forward position to activate the switch.

⚠ DANGER

When the coring head is running, it can injure your hands and feet.

Keep hands and feet away from the coring head. Ensure that the coring head area is clear of any obstructions before lowering it.

To lower the coring head without engaging it, turn the ignition key to the RUN position (without the engine running), move the traction bail to the forward position, and press the bottom of the switch.

Ignition Switch and Key

Use the ignition switch (Figure 14), to start and shut off the engine. The switch has 3 positions:

- START—rotate key clockwise to the START position to engage the starter motor.

- RUN—when the engine starts, release the key and it moves automatically to the ON position.
- OFF—rotate the key counterclockwise to the OFF position to shut off the engine.

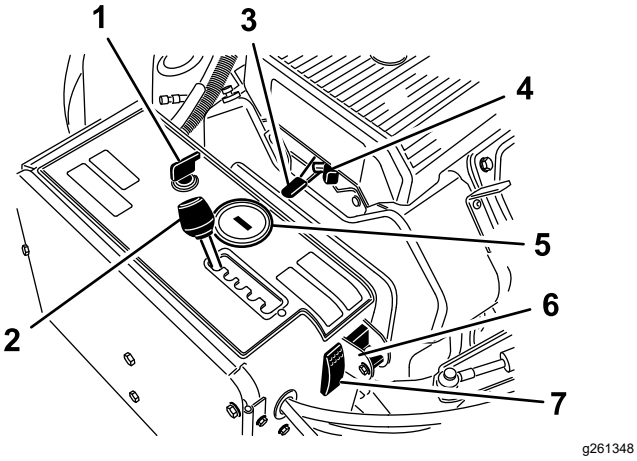

Figure 14

1. Ignition switch and key
2. Aerator spacing lever
3. Throttle lever
4. Choke
5. Hour meter/tachometer
6. Manual ground following selector switch
7. System reset switch

Aerator Spacing Lever

Move aerator spacing lever (Figure 14) to desired hole spacing or to T for transport.

Throttle Lever

Use the throttle lever (Figure 14) to control the engine speed. Moving throttle lever forward increases engine speed (FAST position); backward decreases engine speed (SLOW position). The engine speed regulates the speed of the coring head and controls the ground speed of the machine.

Hour Meter/Tachometer

- When the engine shuts off, the hour meter/tachometer (Figure 14) displays the number of hours the engine has run.
- When the engine is running, hour meter/tachometer displays the engine speed in revolutions per minute (rpm).
- The hour meter/tachometer displays the following maintenance reminders:
  - After the first 50 hours of operation and then after every 100 hours (e.g., 150, 250, 350, etc.), the screen displays “CHG OIL” to remind you to change the engine oil.
  - After every 100 hours (e.g., 100, 200, 300, etc.), the screen displays “SVC” to remind you to perform the other maintenance procedures based on a 100, 200, or 500 hour schedule.

    Note: These reminders display starting 3 hours prior to the service interval time and flash at regular intervals for 6 hours.

Choke

Use the choke when starting a cold engine (Figure 14).

Manual Ground Follow Selector Switch

Rotate the switch to the down position to turn off the TrueCore feature (Figure 14). Remove the bolt to access the manual ground switch.

System Reset Switch

Press the system reset switch (Figure 14) to raise the coring head if the machine becomes disabled (e.g., the machine runs out of fuel).

Fuel-Shutoff Valve

Use the fuel-shutoff valve to control fuel from the fuel tank (Figure 15).

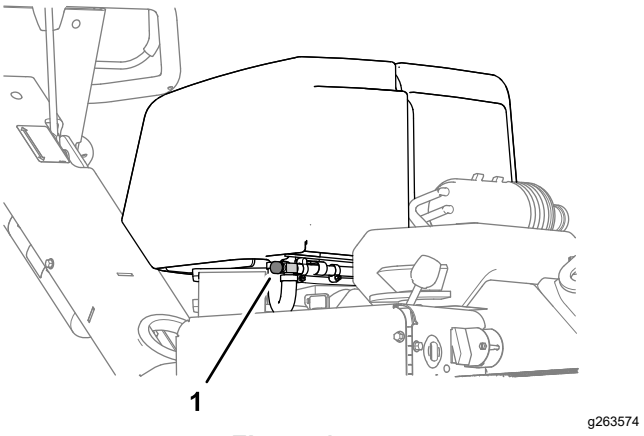

Figure 15

1. Fuel-shutoff valve

Aeration Depth Lever

Move the lever to the desired depth of aeration (Figure 16).

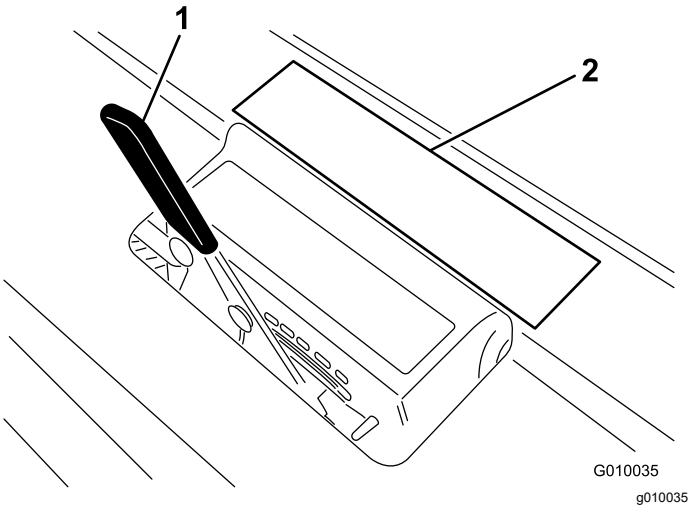

Figure 16

1. Aeration depth lever
2. Depth decal

Specifications

Note: Specifications and design are subject to change without notice.

Width	127 cm (50.1 inches)
Wheel base	113 cm (44.5 inches)
Track width	97 cm (38.3 inches)
Coring width	122 cm (48 inches)
Length	265 cm (104.5 inches)
Head height (raised)	114 cm (45 inches)
Head height (lowered)	93 cm (36-1/2 inches)
Height, handle	104 cm (41 inches)
Ground clearance	12 cm (4.8 inches)
Forward speed	0 to 6 kph (0 to 3-1/2 mph)
Reverse speed	0 to 3 kph (0 to 2 mph)
Net weight	721 kg (1,590 lb)

Attachments/Accessories

A selection of Toro approved attachments and accessories is available for use with the machine to enhance and expand its capabilities. Contact your authorized Toro distributor or go to www.Toro.com for a list of all approved attachments and accessories.

To ensure optimum performance and continued safety certification of the machine, use only genuine Toro replacement parts and accessories. Replacement parts and accessories made by other manufacturers could be dangerous, and such use could void the product warranty.

Refer to the tine configuration table that follows for the tine head, turf guard, and tine information:

Tine Configuration Table

Tine Head Description	Tine Head Spacing	Shank Size	Tine Quantity	Turf Guard Type (quantity)
2x5 Mini-Tine Head	41 mm (1.60 inch)	9.5 mm (3/8 inch)	60	5-Tine—short (2) 5-Tine—long (1)
1x6 Mini-Tine Head	32 mm (1.25 inch)	9.5 mm (3/8 inch)	36	6-Tine—short (2) 6-Tine—long (1)
3 Tine Head (7/8 inch)	66 mm (2.60 inch)	22.2 mm (7/8 inch)	18	3-Tine—short (1) 3-Tine—long (1)
3 Tine Head (3/4 inch)	66 mm (2.60 inch)	19.5 mm (3/4 inch)	18	3-Tine—short (1) 3-Tine—long (1)
4 Tine Head (3/4 inch)	51 mm (2.00 inch)	19.5 mm (3/4 inch)	24	4-Tine—short (1) 4-Tine—long (1)
5 Needle-Tine Head	41 mm (1.60 inch)	—	30	5-tine—short (2) 5-Tine—long (1)

Operation

Note: Determine the left and right sides of the machine from the normal operating position.

Before Operation

Before Operation Safety

General Safety

- Never allow children or untrained people to operate or service the machine. Local regulations may restrict the age of the operator. The owner is responsible for training all operators and mechanics.
- Become familiar with the safe operation of the equipment, operator controls, and safety signs.
- Know how to stop the machine and shut off the engine quickly.
- Check that operator-presence controls, safety switches, and shields are attached and functioning properly. Do not operate the machine unless they are functioning properly.
- Before operating, always inspect the machine to ensure that the tines are in good working condition. Replace worn or damaged tines.
- Inspect the area where you plan to use the machine and remove all objects that the machine could strike.
- Locate and mark all electrical or communication lines, irrigation components, and other obstructions in the area to be aerated. Remove the hazards, if possible, or plan how to avoid them.
- Park the machine on a level surface; engage the parking brake; shut off the engine; remove the key; and wait for all movement to stop before leaving the machine.

Fuel Safety

- Use extreme care in handling fuel. It is flammable, and its vapors are explosive.
- Extinguish all cigarettes, cigars, pipes, and other sources of ignition.
- Do not remove the fuel cap or fill the fuel tank while the engine is running or hot.
- Do not add or drain the fuel in an enclosed space.
- Do not store the machine or fuel container where there is an open flame, spark, or pilot light, such as on a water heater or other appliance.
- If you spill fuel, do not attempt to start the engine; avoid creating any source of ignition until the fuel vapors have dissipated.

Adding Fuel

Fuel Specification

- For best results, use only clean, fresh (less than 30 days old), unleaded gasoline with an octane rating of 87 or higher ((R+M)/2 rating method).
- Ethanol: Gasoline with up to 10% ethanol (gasohol) or 15% MTBE (methyl tertiary butyl ether) by volume is acceptable. Ethanol and MTBE are not the same. Do not use gasoline with 15% ethanol (E15) by volume. Never use gasoline that contains more than 10% ethanol by volume, such as E15 (contains 15% ethanol), E20 (contains 20% ethanol), or E85 (contains up to 85% ethanol). Using unapproved gasoline may cause performance problems and/or engine damage which may not be covered under warranty.
- Do not use fuel containing methanol.
- Do not store fuel either in the fuel tank or fuel containers over the winter unless you use a fuel stabilizer.
- Do not add oil to fuel.

Important: **Do not use fuel additives other than a fuel stabilizer/conditioner. Do not use fuel stabilizers with an alcohol base such as ethanol, methanol, or isopropanol.**

Important: **Do not use methanol, gasoline containing methanol, or gasohol containing more than 10% ethanol because the fuel system could be damaged. Do not mix oil with fuel.**

Filling the Fuel Tank

Fuel tank capacity: 26.5 L (7 US gallons)

1. Park the machine on a level surface, shut off the engine, engage the parking brake, and remove the key.
2. Clean around the fuel-tank cap and remove it (Figure 17).

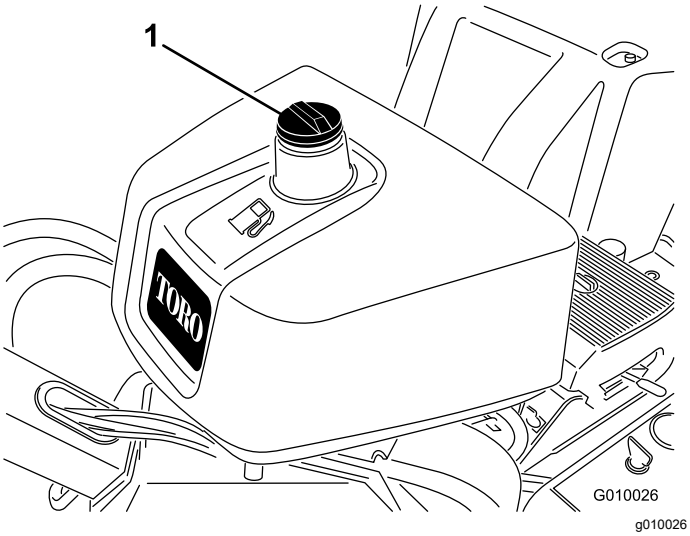

Figure 17

1. Fuel-tank cap

3. Add fuel to the fuel tank, until the level is 6 mm to 13 mm (1/4 to 1/2 inch) below the bottom of the filler neck.

   Important: **This space in the tank allows fuel to expand. Do not fill the fuel tank completely full.**

4. Install the fuel-tank cap securely.
5. Wipe up any spilled fuel.

Performing Daily Maintenance

Before starting the machine each day, perform the following daily-check procedures:

- Checking the Engine-Oil Level (page 36)
- Checking the Hydraulic-Fluid Level (page 45)
- Cleaning the Engine Screen (page 38)
- Testing the Safety Interlock System (page 20)

The Safety Interlock System

⚠ CAUTION

If safety interlock switches are disconnected or damaged the machine could operate unexpectedly causing personal injury.

- **Do not tamper with the interlock switches.**
- **Check the operation of the interlock switches daily and replace any damaged switches before operating the machine.**

Understanding the Safety Interlock System

The safety interlock system prevents the engine from starting unless the traction bail is in the NEUTRAL position.

Testing the Safety Interlock System

Service Interval: Before each use or daily

1. If running, shut off the engine.
2. While holding the traction bail forward or backward, start the engine.

   The engine should not start.

3. Move the traction bail to the NEUTRAL position and start the engine.
4. Move the machine to an area of turf.
5. Engage the PTO and lower the coring head.
6. Release the traction lever or moved it to the neutral position.

   The coring head should raise and stop rotating.

If the safety system does not operate as described above, have an authorized Toro distributor repair the safety system immediately.

During Operation

During Operation Safety

- The owner/operator can prevent and is responsible for accidents that may cause personal injury or property damage.
- Wear appropriate clothing, including eye protection; long pants; substantial, slip-resistant footwear; and hearing protection. Tie back long hair, secure loose clothing, and do not wear loose jewelry.
- Do not operate the machine when tired, ill, or under the influence of alcohol or drugs.
- Never carry passengers on the machine and keep bystanders and pets away from the machine during operation.
- Operate the machine only in good visibility to avoid holes or hidden hazards.
- Keep your hands and feet away from the tines.
- Look behind and down before backing up to be sure of a clear path.

- Stop the machine, shut off the engine, remove the key, wait for all moving parts to stop, and inspect the tines after striking an object or if there is an abnormal vibration in the machine. Make all necessary repairs before resuming operation.
- Always maintain proper tire pressure.
- Reduce traction speed on rough roads and surfaces.

Slope Safety

- Slopes are a major factor related to loss of control and rollover accidents, which can result in severe injury or death. You are responsible for safe slope operation. Operating the machine on any slope requires extra caution.
- Evaluate the site conditions to determine if the slope is safe for machine operation including surveying the site. Always use common sense and good judgment when performing this survey.
- Review the slope instructions listed below for operating the machine on slopes and review the conditions to determine whether you can operate the machine in the conditions on that day and at that site. Changes in the terrain can result in a change in slope operation for the machine.
- Avoid starting, stopping, or turning the machine on slopes. Avoid making sudden changes in speed or direction. Make turns slowly and gradually.
- Do not operate a machine under any conditions where traction, steering, or stability is in question.
- Remove or mark obstructions such as ditches, holes, ruts, bumps, rocks, or other hidden hazards. Tall grass can hide obstructions. Uneven terrain could overturn the machine.
- Be aware that operating the machine on wet grass, across slopes, or downhill may cause the machine to lose traction. Loss of traction to the drive wheels may result in sliding and a loss of braking and steering.
- Use extreme caution when operating the machine near drop offs, ditches, embankments, water hazards, or other hazards. The machine could suddenly roll over if a wheel goes over the edge or the edge caves in. Establish a safety area between the machine and any hazard.

Starting the Engine

1. Release the traction bail and engage the parking brake.
2. Use the choke as follows:
   - Before starting a cold engine, move the choke control to the ON position.
   - When starting a warm or hot engine, you may not need to use the choke.
3. Move the throttle lever to the FAST position before starting a cold engine.
4. Turn the ignition key to start. When the engine starts, release the key.

   Important: **Do not engage the starter for more than 10 seconds at a time. If the engine fails to start, allow a 30-second cooldown period between attempts. Failure to follow these instructions can burn out the starter motor.**
5. After the engine starts, move the choke to the OFF position. If the engine stalls or hesitates, move the choke back to the ON position for a few seconds. Then move the throttle lever to desired setting. Repeat this as required.

Shutting Off the Engine

1. Move the throttle lever to the SLOW position.
2. Let the engine idle for 60 seconds.
3. Turn the ignition key to the OFF position and remove the key.
4. Close the fuel-shutoff valve before transporting or storing the machine.

   Important: **Close the fuel-shutoff valve before transporting the machine on a trailer or storing the machine. Engage the parking brake before transporting the machine. Remove the key as the fuel pump may run and cause the battery to lose charge.**

⚠ CAUTION

Children or bystanders may be injured if they move or attempt to operate the machine while it is unattended.

Always remove the ignition key and engage the parking brake when leaving the machine unattended, even if just for a few minutes.

Using the Machine

1. Start the engine.
2. Disengage the parking brake.
3. Look in the direction of your planned path to ensure that it is clear.
4. Move the traction bail down to drive the machine forward.

Walk in a forward direction while operating the machine, do not walk and face rearward when operating the machine.

5. Engage the PTO and lower the coring head.
6. Disengage the PTO and raise the coring head.
7. To stop the machine, release the traction bail.

Setting the Coring Depth

To set the coring depth of the aerator, proceed as follows:

1. Park the machine on a level surface, shut off the engine, engage the parking brake, and remove the key.
2. Select the preferred tine for your application.
3. Lay the tine on the tine depth decal (Figure 18) with 1 end lined up with the desired depth of aeration (refer to the tine overlay on the decal).

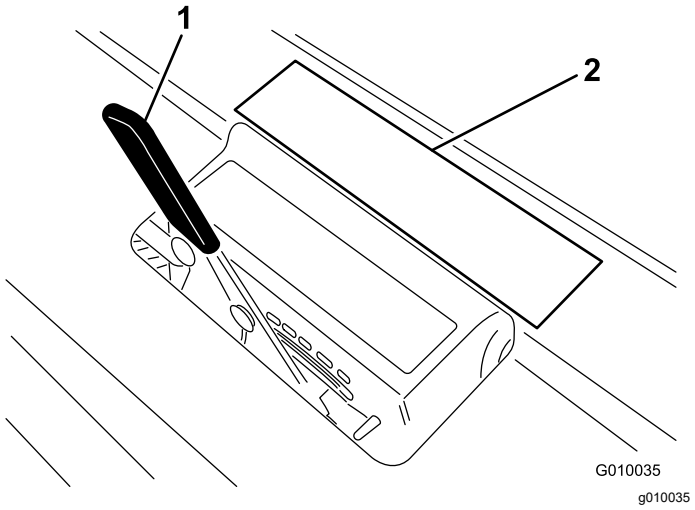

Figure 18

1. Aeration depth lever
2. Overlay on decal

4. Determine which letter setting the other end of the tine lines up with and set the depth control lever to the corresponding letter setting.

Note: As the tine wears, you may be able to reset the depth setting to account for that wear. For instance, if your new tine depth setting has you in the G setting, you can reset to the H setting after 6 mm (1/4 inch) of tine wear.

Using the Line Marker

Use the line marker to align aeration rows (Figure 19).

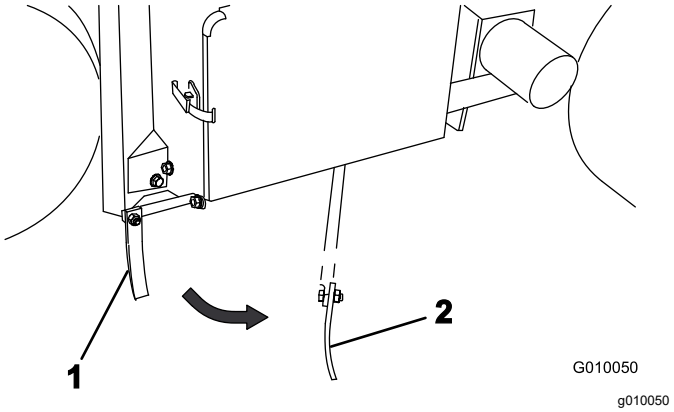

Figure 19

1. Line marker (storage position)
2. Line marker (alignment position)

Supporting the Coring Head with the Service Latch

Install the service latch before performing service on the coring head or when storing the machine for more than a couple of days.

⚠ DANGER

If the coring head is raised and not latched, it can lower unexpectedly and injure you or bystanders.

Any time you service the coring head, including changing of tines or turf guards, use the service latch to secure coring head in the raised position.

1. Raise the coring head.
2. Park the machine on a level surface, shut off the engine, engage the parking brake, and remove the key.
3. Remove the clip ring securing the service latch in the stowed position (Figure 20).

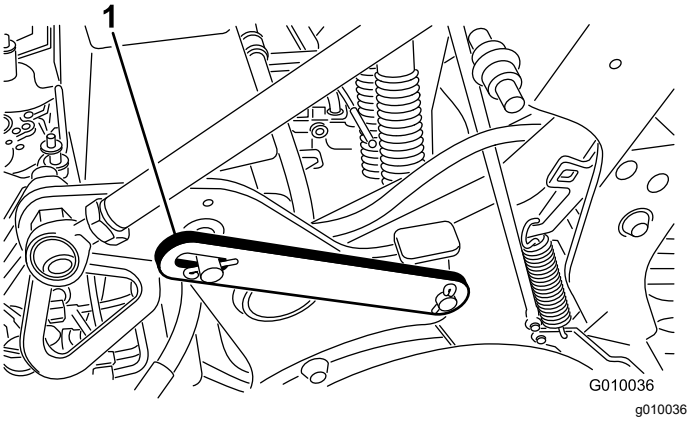

Figure 20

1. Service latch in (lowered) storage position

4. Pivot the service latch rearward and insert it onto the coring head pin (Figure 21). Secure the latch with the clip ring.

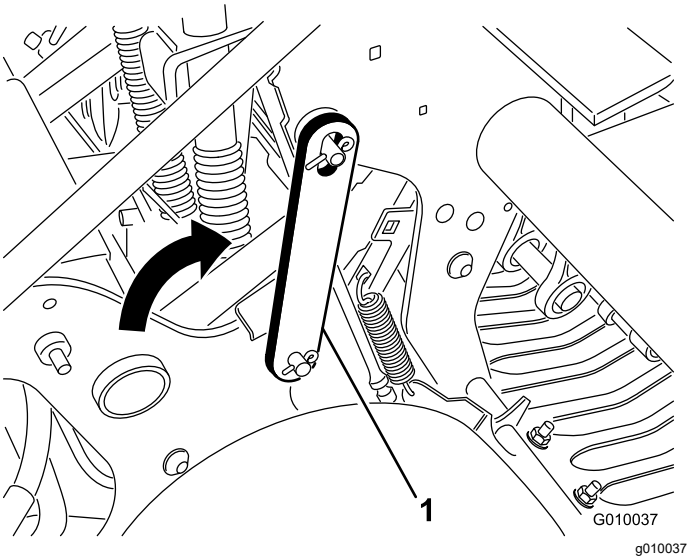

Figure 21

1. Service latch in (raised) locked position

Setting Up Manual Ground Following

The manual depth setting spacers are required only when the TrueCore® ground following system does not function because of damage to the feedback system (turf guards, tie rod, and actuator assembly) or if you need maximum coring depth.

1. Park the machine on a level surface, shut off the engine, engage the parking brake, and remove the key.
2. Remove the lynch pin retaining the spacers and depth pins (Figure 22).

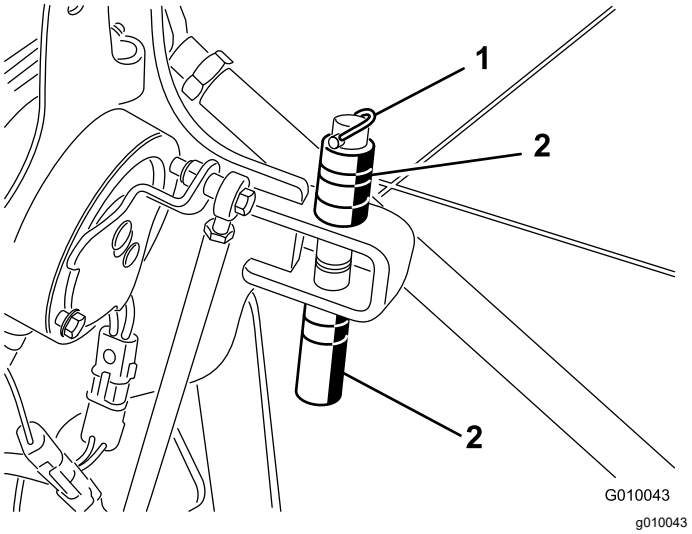

Figure 22

1. Lynch pin
2. Spacers and depth pin

3. Position the spacers above or below the bracket to attain the desired coring depth.
   - Thick spacers equate to 19 mm (3/4 inch) increments.
   - Thin spacer equates to 9.5 mm (3/8 inch) depth increment.
   - With all spacers on the top side, the depth setting is 10.7 cm (4-1/4 inches).
4. Remove the locking bolt and nut from the selector switch (Figure 23).

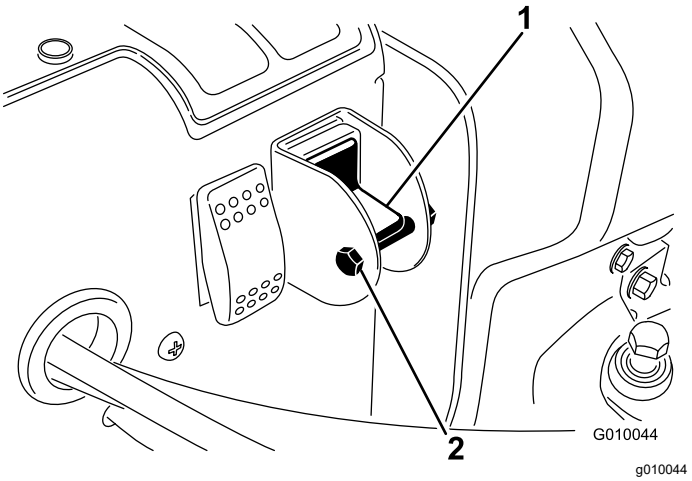

Figure 23

1. Manual ground following selector switch
2. Bolt and nut

5. Rotate the switch to the down position to turn off True Core feature.
6. To prevent the setting from accidentally changing, install the locking bolt and nut.

Installing Tine Holders, Turf Guards, and Tines

A wide selection of tine holders, turf guards, and tines are available for the machine. Choose the required components per the accessory chart in Attachments and Accessories.

1. Raise the coring head and lock it in position with the service latch.
2. Park the machine on a level surface, shut off the engine, engage the parking brake, and remove the key.
3. Mount a tine holder to each tine arm (Figure 24) with 3 bolts (1/2 x 1-1/4 inches). Torque the bolts to 101.6 N·m (75 ft-lb).

   Note: The bolts are parts in the tine holder kits.

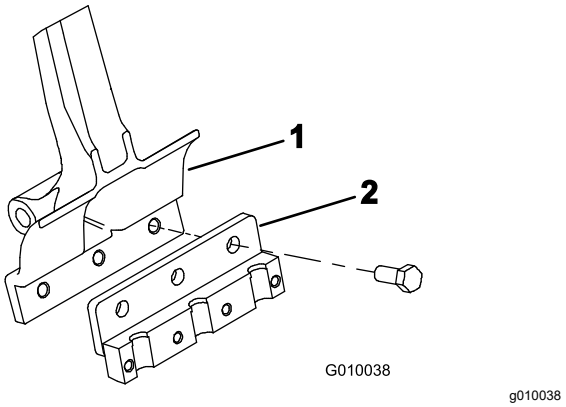

Figure 24

1. Tine arm
2. Tine holder

4. Loosely install the turf guards to the turf guard brackets with 4 turf guard clamps and 12 flange nuts (Figure 25). Do not tighten the fasteners.

   Note: The factory ships turf guard clamps and flange nuts secured to the turf guard brackets (Figure 25).

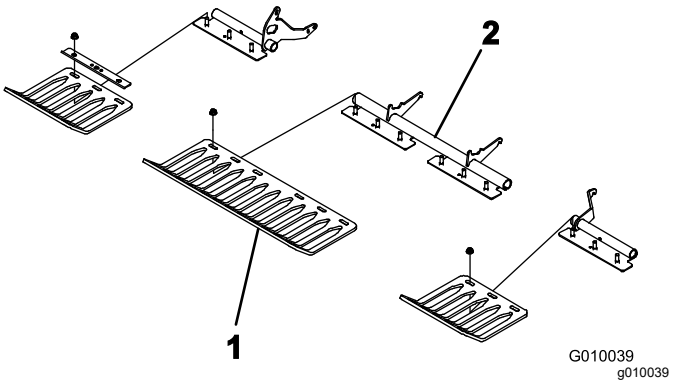

Figure 25

1. Turf guard
2. Turf guard clamp

5. Loosely install a tine clamp to each tine holder (Figure 26) with 4 bolts (3/8 x 1-1/2 inches). Do not tighten the bolts.

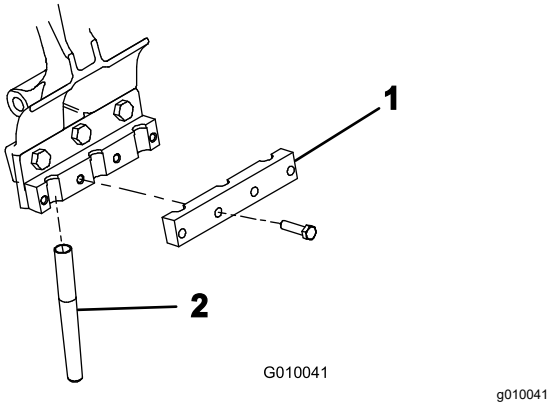

Figure 26

1. Tine clamp
2. Tine

6. Install tines into the #2 and #5 tine holders (Figure 27) Tighten the bolts.

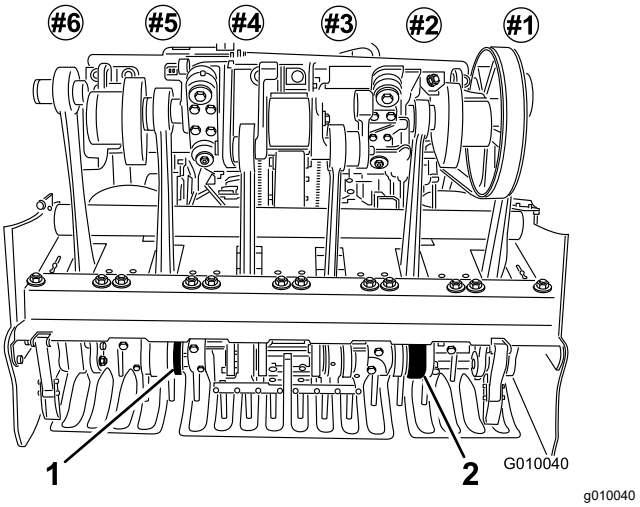

Figure 27

1. Number 5 tine holder
2. Number 2 tine holder

7. Check that the tines line up with the center of the gaps in the turf guards (Figure 28). Adjust the turf guards as required and tighten the nuts.

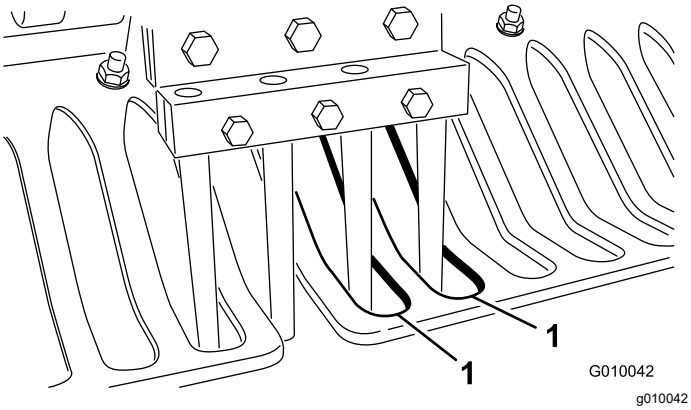

Figure 28

1. Gaps in the turf guards

8. Install the remaining tines into the #1, 3, 4, and 6 tine holders. Torque all tine holder bolts to 40.6 N·m (30 ft-lb).

Replacing Tines

Refer to Installing Tine Holders, Turf Guards, and Tines (page 24) for illustrations.

1. Raise the coring head and lock it in position with the service latch.
2. Park the machine on a level surface, shut off the engine, engage the parking brake, and remove the key.
3. Loosen the tine holder retaining bolts and remove the old tines.
4. Insert the new tines into the tine holder.
5. Tighten the bolts to the recommended torque level.
6. Repeat this procedure on the remaining arms.

Adjusting the Weight Transfer

The machine transfers weight from the traction unit to the coring head to help maintain hole depth in various soil structures. However, if the soil structure is firm enough to not allow full aeration depth, the coring head may need additional weight transfer. To increase the down pressure of the weight transfer springs, proceed as follows:

⚠ WARNING

Sudden release of the spring plates could cause injury.

Acquire the help of another person to help adjust the weight transfer spring.

1. Park the machine on a level surface, shut off the engine, engage the parking brake, and remove the key.
2. Loosen the carriage bolt nuts securing the spring brackets to the coring head (Figure 29). Do not remove them.

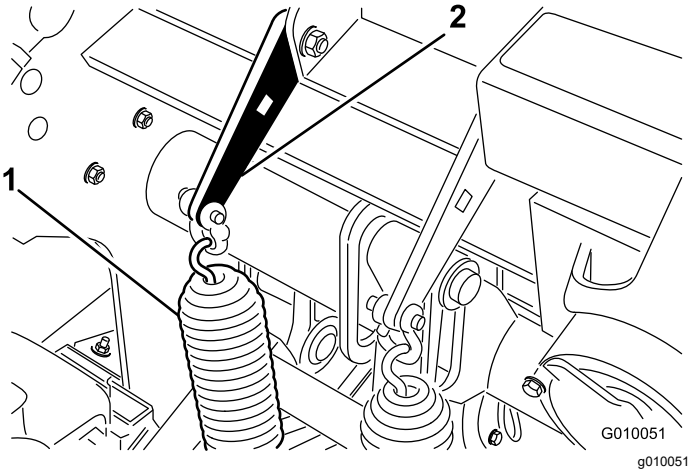

Figure 29

1. Weight transfer springs
2. Spring plate

3. Insert a 1/2 inch ratchet or breaker bar into the square hole in the spring plate (Figure 30).

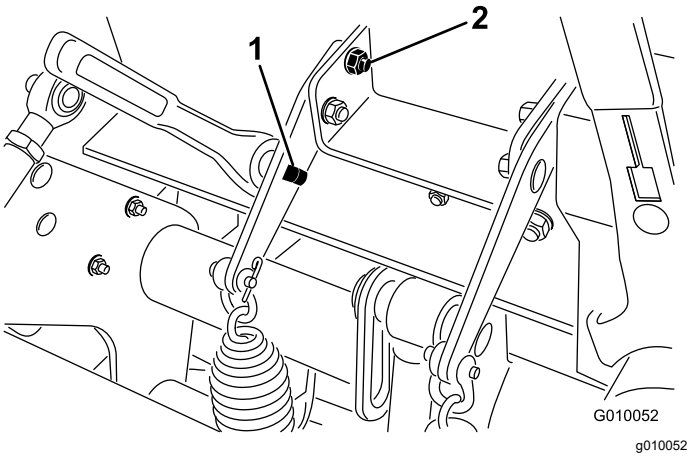

Figure 30

1. Square hole in bracket
2. Rear carriage bolt

4. Hold the ratchet or breaker bar to relieve the tension on the spring plate and remove the rear carriage bolt.
5. Rotate the spring plate until it aligns with the other hole, insert the carriage bolt, and tighten the nuts.

   Note: Rotating the spring plates upward increases the weight transfer.

Adding Additional Weight

With the increased weight transfer, it is possible to aerate firm enough ground that the weight transfer begins to lift the rear 2 tires off the ground. This may lead to irregular hole spacing.

If this occurs, you can add an additional weight plate to the rear frame axle tube. Each cast weight adds 28.5 kg (63 lb) to the machine. You can add up to 2 plates. Refer to the *Parts Catalog* for these part numbers.

Pushing/Pulling the Machine by Hand

Important: **Do not tow the machine faster than 1.6 km/h (1 mph) because hydraulic component damage may occur.**

1. Park the machine on a level surface, shut off the engine, engage the parking brake, and remove the key.
2. Locate the bypass valve between the engine and hydrostatic pump (Figure 31).
3. Using a 5/8 inch wrench, rotate the bypass valve counterclockwise 1 turn. This allows the hydraulic fluid to bypass the pump enabling the wheels to turn (Figure 31).

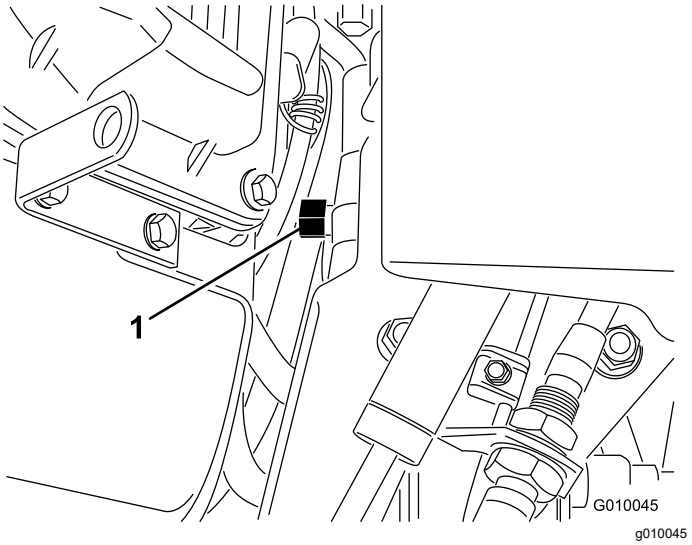

Figure 31

1. Bypass valve

Important: **Do not rotate the bypass valve more than 1 turn. This prevents the valve from coming out of the body and causing fluid to run out.**

Important: **Do not push/pull the machine more than 30.5 m (100 ft) or faster than 0.6 km/h (1 mph) because hydraulic component damage may occur.**

4. Disengage the parking brake before pushing/pulling the machine.

   Important: **Do not operate the engine with the bypass valve open for more than 10 to 15 seconds.**

5. To operate the machine again, rotate the bypass valve clockwise 1 turn (Figure 31).

   Note: Do not overtighten the bypass valve.

   Note: You must close the bypass valve to drive the machine. Do not try to operate traction system with the bypass valve open.

Resetting the System Control Circuit

If the coring head remains in the aerating position (run out of fuel, forget to install service latch for storage, mechanical failure of engine or pump, etc.) the electrical system that controls the hydraulic solenoid coils and the electric clutch disables to prevent unintended movement of the coring head without the intentionally resetting the system.

1. Start the engine.
2. Press the system reset switch (Figure 32).

   The coring head raises and the electrical-control circuit resets.

   Note: If you cannot run the engine, crank the engine with the starter while pressing the system reset switch until the coring head clears the ground.

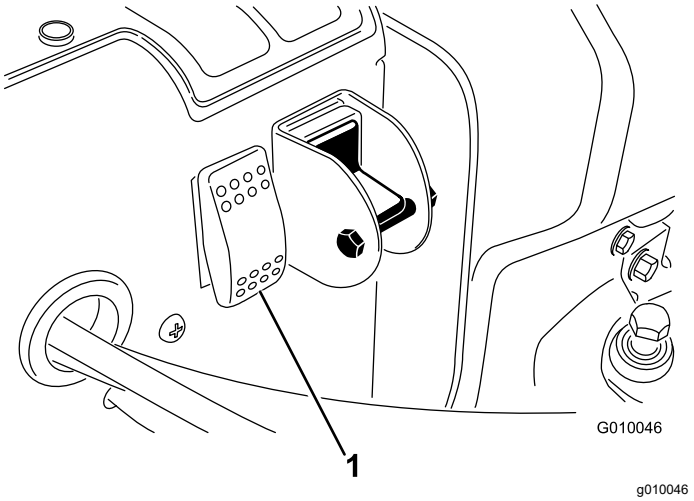

Figure 32

1. System reset switch

Moving the Machine when the Coring Head is Lowered

If the engine fails or you cannot be start it with the coring head lowered and the tines engaged in the soil, perform the following steps:

1. Remove the tine holders from the stomper arms.
2. Open the bypass valve 1 turn.
3. Pull/push the machine to a nearby location to continue service or load onto a trailer.

Important: **Do not pull/push machine for more than 30.5 m (100 ft) and no faster than 1.6 km/h (1 mph), because hydraulic damage may occur.**

Operating Tips

General

⚠ WARNING

Contacting obstacles with the machine may cause you to lose control of it.

Always be aware of obstacles at the job site. Plan your aeration path to avoid contact with any obstacle by you or the machine.

- Make very gradual turns when aerating. Never make sharp turns with the coring head engaged. Plan your aeration path before lowering the aerator.
- Always maintain awareness of what lies ahead in the direction of forward travel. Avoid operation in close proximity of buildings, fences, and other equipment.
- Look behind frequently to ensure that the machine operates properly, and you maintain alignment with previous pass.
- Always clear the area of all damaged machine parts, such as broken tines, etc., to prevent their being picked up by mowers or other turf maintenance equipment.
- Replace broken tines and inspect and correct damage to those still usable. Repair any other machine damage before commencing operation.
- When aerating with less than the full width of the machine, you may remove tines, but the tine heads should remain installed on the stomper arms to ensure proper balance and operation of the machine.
- This machine aerates deeper than most greens aerators. On native or modified push-up greens and tees, the deeper depth and longer hollow tines may have difficulty ejecting the complete core. This is due to harder native soil that sticks in the end of the tine. Side-eject greens/tees tines from Toro stay cleaner and reduce the time required to clean the tines out. You will eventually eliminate this condition with continued aeration and top-dressing programs.

Hard Ground

If the ground is too firm to obtain the desired coring depth, the coring head can get into a bouncing rhythm. This is due to the hard pan the tines are attempting to penetrate. Correct this condition by attempting the following:

- Do not aerate if ground is too hard or dry. You obtain best aeration results after a rain or watering the turf the previous day.
- Change to a 3-tine head, if attempting to use the 4-tine head or reduce the number of tines per stomper arm. Attempt to maintain a symmetrical tine configuration to evenly load the stomper arms.
- If ground is hard packed, reduce aerator penetration (depth setting), clean up the cores, water the turf, and re-aerate at a deeper penetration.

Aeration of soil types built on top of hard subsoils (i.e., soil/sand placed over rocky soil) can cause undesired hole quality. This occurs when the aeration depth is greater than the built up soil and the subsoil is too hard to penetrate. When the tines contact this harder subsoil, the aerator may lift and cause the top of the holes to become elongated. Reduce the aerating depth sufficiently to avoid penetration into the hard subsoil.

Entrance/Exit Hole Quality

The entrance/exit hole quality is deteriorating when the machine produced the following results:

- The hole quality upon entrance is slotted (pulled forward).
- The coring head fails to engage before contacting the turf.

Check the following:

- The engagement position switch (no. 3 switch location on H-frame) may need adjustment; refer to Adjusting the #3 Proximity Switch (page 28).
- Your machine may have a worn or slipping clutch; refer to the *service manual* for your machine.

Adjusting the #3 Proximity Switch

1. Lift the latch lever for the hood and lift the hood from the machine (Figure 33).

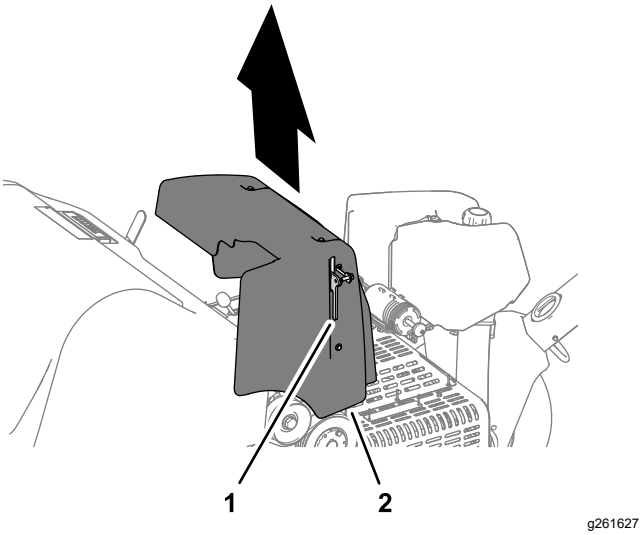

Figure 33

1. Latch lever
2. Hood

2. Verify that the proximity-switch assembly (outboard of the H-frame) is no more than 1.5 mm (0.06 inches) from the target plate (Figure 34).

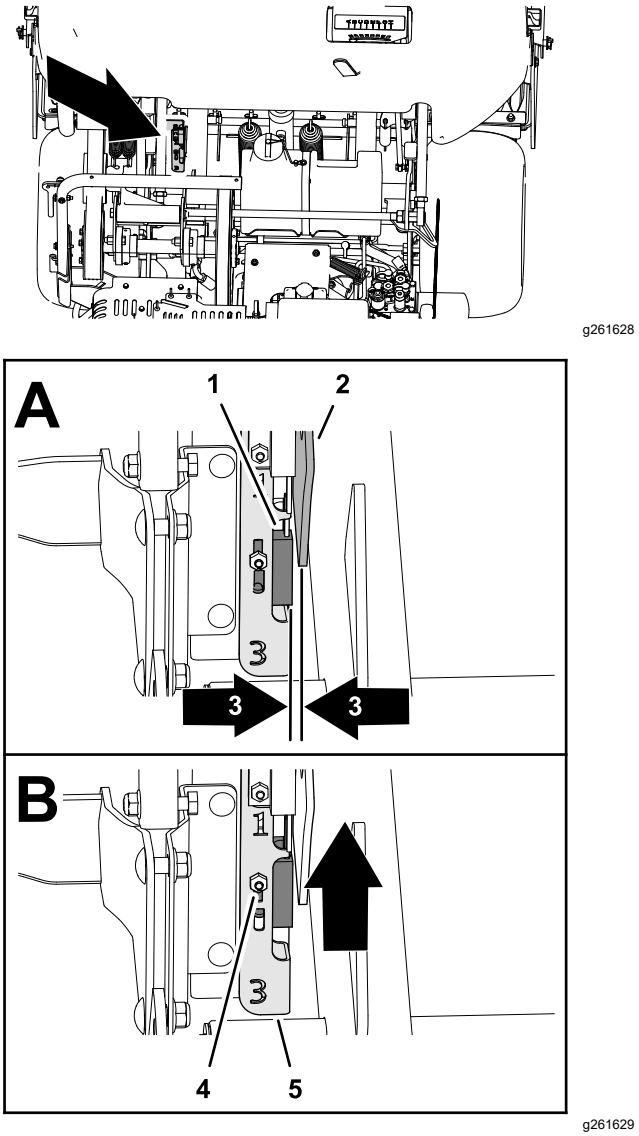

Figure 34

1. #3 proximity switch
2. Target plate
3. 1.5 mm (0.06 inches) gap
4. Locknut and carriage bolt
5. H-bracket

3. Verify that the #3 proximity switch is functioning properly.
4. If needed, loosen the locknut and carriage bolt that secure the switch mounting plate and lift it to the highest position and secure the mounting plate (Figure 34).

   Note: Raising the switch causes the clutch to engage sooner.
5. Tighten the locknut (Figure 34).
6. Align the bracket of the hood with the hood mount on the machine.
7. Assemble the hood to the machine and ensure that the latch secures the hood.
8. Check the entrance/exit hole quality.

Important: **If the coring head fails to start before entrance and the position switch is located as high as permissible, the electric clutch may have deteriorated sufficiently to cause a delay in engagement. Contact your authorized Toro distributor or refer to the *Service Manual*.**

Mini Tine (Quad Tine)

Because of the double row design, the mini-tine coring head requires the hole spacing to be set at 6.3 cm (2-1/2 inches). Ground speed is critical to maintain the appearance of 3.2 cm (1-1/4 inches) hole spacing. Refer to Adjusting Hole Spacing (page 48) if your hole spacing requires a small change.

With the mini tine head or larger solid tine use, the turf root structure is important to preventing turf damage due to tearing of the root zone. If the center 2 arms begin to lift the turf or damage to the root zone is excessive, proceed as follows:

- Increase the hole spacing
- Decrease tine size
- Decrease tine depth
- Remove some of the tines

The lifting action that solid tines creates when it is pulled from the turf may cause turf damage. This lift can tear the root zone if the density of tines or diameter of tines is too high.

Front Hole Dimpled or Pushed (Solid Tines or Softer Soil Conditions)

When aerating with longer solid tines (i.e., 3/8 x 4 inches long) or needle type tines, the front of the holes may become slotted or tufted. To regain excellent hole quality for this configuration, slow the engine high idle speed down to 2800 to 2900 rpm. Because traction and coring head speeds increase and decrease together with engine speed, hole spacing is not affected.

If slowing the engine speed does not work to the remedy hole quality for the larger solid tines, the Roto-Link damper mechanism may require a stiffer setting. A stiffer Roto-Link setting may help eliminate the front of the hole from being deformed. However, under most conditions, the factory setting works best.

Note: Alter half of the Roto-Links (3 arms) and test the difference on a sample plot.

1. Park the machine on a level surface, shut off the engine, engage the parking brake, and remove the key.
2. Remove the lock nuts securing the Roto-Link damper assembly to the coring head frame.
3. Remove the top damper-spacer that is 1.25 cm (1/2 inch) thick and re-secure the Roto-Link damper assembly to the coring head frame. Be sure to use the hardened D-washer.
4. Loosen the bolts securing the bumper plate.
5. Slide the bumper plate forward and secure the bolts. This allows the Roto-Link bumpers to oscillate properly.

Take the machine to a test area and compare the hole quality. If improved, complete this procedure with remaining Roto-Link damper assemblies.

Note: You must reverse the position of the Roto-Link damper if you change back to a coring style tine or any of the mini-tines.

After Operation

After Operation Safety

- Park the machine on a level surface; engage the parking brake; shut off the engine; remove the key; and wait for all movement to stop before leaving the machine.
- Keep all parts of the machine in good working condition and all hardware tightened.
- Replace all worn, damaged, or missing decals.

Cleaning the Machine

Service Interval: Before each use or daily

1. Thoroughly wash the machine.

   Use a brush to remove caked-on material.

   Note: Use a garden hose without a nozzle to avoid forcing water past the seals and contaminating bearing grease.
2. Use mild detergent to clean the covers.

   After cleaning, apply a coat of auto wax periodically to maintain the glossy finish of the cover.
3. Inspect the machine for damage, oil leaks, and component and tine wear.
4. Remove, clean, and oil the tines. Spray a light oil mist on coring head bearings (crank and damper links).

Important: **Secure the coring head with the service latch if you store the machine for more than a couple of days.**

Locating the Tie-Down Points

There are tie downs located at the front and rear sides of the machine (Figure 35, Figure 36, and Figure 37).

Note: Use properly-rated DOT-approved straps to tie down the machine.

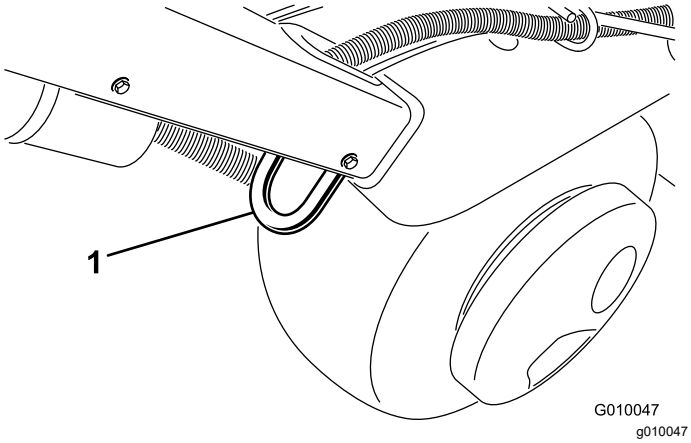

Figure 35

1. Tie down

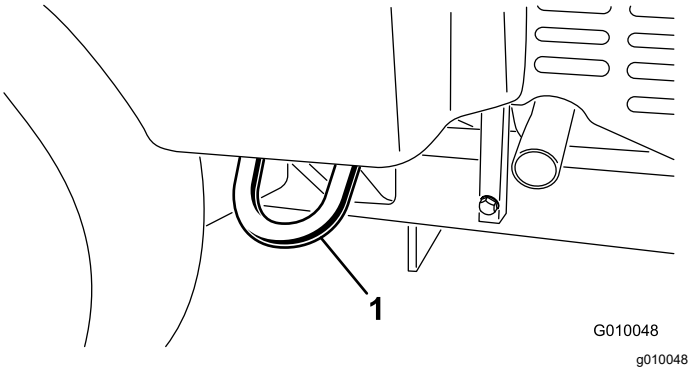

Figure 36

1. Tie down

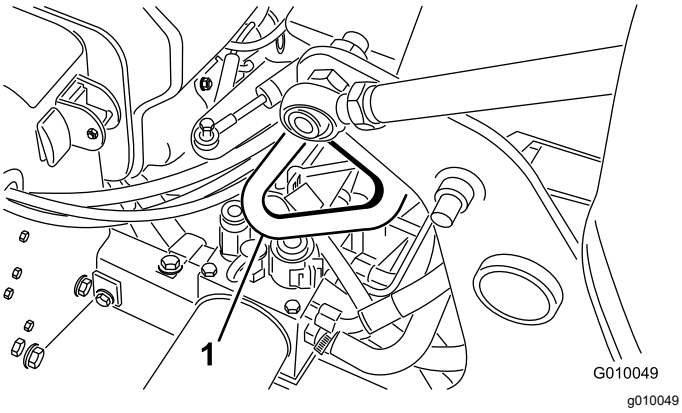

Figure 37

1. Tie down

Hauling the Machine

⚠ WARNING

Driving the machine on street or roadway without turn signals, lights, reflective markings, or a slow-moving vehicle emblem is dangerous and can lead to accidents causing personal injury.

Do not operate the machine on a public street or roadway.

Important: **Use full-width ramps for loading the machine onto a trailer or truck.**

1. Load the machine onto the trailer or truck (coring head forward—preferred).
2. Engage the parking brake, shut off the engine, and remove the key.
3. Secure the coring head with the service latch; refer to Supporting the Coring Head with the Service Latch (page 22).
4. Close the fuel-shutoff valve; refer to Fuel-Shutoff Valve (page 16).
5. At the tie-down points, bind the machine to the trailer or truck with cables, chains, or straps.

Trailer Recommendations

Weight	721 kg (1,590 lb) or 805 kg (1,775 lb) with 2 optional weights
Width	130 cm (51 inches) minimum
Length	267 cm (105 inches) minimum
Ramp Angle	3.5/12 pitch (16°) maximum
Load Direction	Coring head forward (preferred)
Vehicle Tow Capacity	Greater than gross trailer weight (GTW)

Important: **Do not use the Hydroject trailer/tote to trailer this machine.**

Maintenance

Note: Determine the left and right sides of the machine from the normal operating position.

Maintenance Safety

⚠ CAUTION

If you leave the key in the ignition switch, someone could accidently start the engine and seriously injure you or other bystanders.

Engage the parking brake, shut off the engine, remove the key, and secure the coring head with the service latch before servicing or adjusting to the machine.

- Always shut off the machine, remove the key (if equipped), wait for all moving parts to stop, and allow the machine to cool before adjusting, servicing, cleaning, or storing it.
- Perform only those maintenance instructions described in this manual. If major repairs are ever needed or assistance is desired, contact an authorized Toro distributor.
- Ensure that the machine is in safe operating condition by keeping nuts, bolts, and screws tight.
- If possible, do not perform maintenance while the engine is running. Keep away from moving parts.
- Carefully release pressure from components with stored energy.
- Check the tine mounting bolts daily to be sure that they are tightened to specification.
- Ensure that all guards are installed, and the hood is secured shut after maintaining or adjusting the machine.

Recommended Maintenance Schedule(s)

Maintenance Service Interval	Maintenance Procedure
After the first 8 hours	• Adjust the pump belt. • Change the hydraulic fluid and the return and charge filters. • Check the torque of the coring head fasteners, tiller handle fasteners and wheel lug nuts.
After the first 50 hours	• Change the engine oil and filter.
Before each use or daily	• Test the safety interlock system. • Clean the machine • Check the engine-oil level. (Check the oil when the engine is cold.) • Remove debris from the engine screen. (Clean more frequently in dirty operating conditions.) • Check the hydraulic lines. • Check the hydraulic-fluid level.
Every 25 hours	• Clean the foam air filter element and check the paper element for damage. • Check the electrolyte level and clean the battery. If machine is in storage, every 30 days.
Every 50 hours	• Check the tire pressure.
Every 100 hours	• Replace the paper air filter element. • Change the engine oil and filter. • Replace the fuel filter.
Every 200 hours	• Check the spark plugs. • Change the hydraulic fluid and the return and charge filters.
Every 500 hours	• Inspect the coring head bearings, if needed, replace.
Before storage	• Refer to the Storage section for procedures necessary to perform before storing the machine for more than 30 days.
Yearly	• Check the coring head bearings. • Check the battery cable connections. • Inspect the belts for wear and damage.

Important: **Refer to your engine owner's manual for additional maintenance procedures.**

Daily Maintenance Checklist

Duplicate this page for routine use.

Maintenance Check Item	For the week of:						
	Mon.	Tues.	Wed.	Thurs.	Fri.	Sat.	Sun.
Check the safety interlock operation.							
Check parking brake operation.							
Check the engine-oil level.							
Check fuel level							
Check the air cleaner.							
Check the engine for debris.							
Check unusual engine noises.							
Check unusual operating noises.							
Check the hydraulic-fluid level.							
Check the hydraulic hoses for damage.							
Check for fluid leaks.							
Check instrument operation.							
Check the condition of the tines.							
Touch up damaged paint.							

Notation for Areas of Concern

Inspection performed by:		
Item	**Date**	**Information**
1		
2		
3		
4		
5		
6		
7		
8		

Important: **Refer to your engine owner's manual for additional maintenance procedures.**

⚠ CAUTION

If you leave the key in the ignition switch, someone could accidently start the engine and seriously injure you or other bystanders.

Remove the key from the ignition and disconnect the wire from the spark plug(s) before you do any maintenance. Set the wire aside so that it does not accidentally contact the spark plug.

Pre-Maintenance Procedures

Important: **The fasteners on the covers of this machine are designed to remain on the cover after removal. Loosen all the fasteners on each cover a few turns so that the cover is loose but still attached, then go back and loosen them until the cover comes free. This prevents you from accidentally stripping the bolts free of the retainers.**

Lifting the Machine

⚠ CAUTION

If the machine is not properly supported by blocks or jack stands, the machine may move or fall, which may result in personal injury.

- **When changing attachments, tires, or performing other service, use the correct blocks, hoists, and jacks.**
- **Make sure that the machine is parked on a solid, level surface such as a concrete floor.**
- **Prior to raising the machine, remove any attachments that may interfere with the safe and proper raising of the machine.**
- **Always chock or block wheels. Use jack stands or solid wood blocks to support the raised machine.**

Jacking the Front End

1. Park the machine on a level surface, shut off the engine, engage the parking brake, and remove the key.
2. Chock the rear tires to prevent the machine from moving.

   Important: **To prevent wheel motor damage, *do not* use the front wheel motor as a jacking point.**
3. Position the jack securely under the front of the frame (Figure 38).

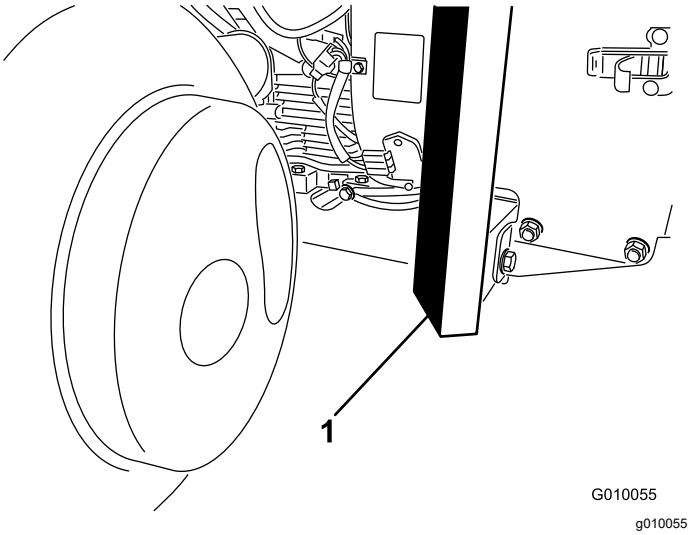

Figure 38

1. Frame

4. Jack the front of the machine off the ground.
5. Position the jack stands or hardwood blocks under the front of the frame to support the machine.

Jacking the Rear End

1. Park the machine on a level surface, shut off the engine, engage the parking brake, and remove the key.
2. Chock the front tire to prevent the machine from moving.

   Important: **To prevent wheel motor damage, *do not* use rear wheel motor as a jacking point.**
3. Place the jack securely under the frame plate just inside of the rear wheel (Figure 39).

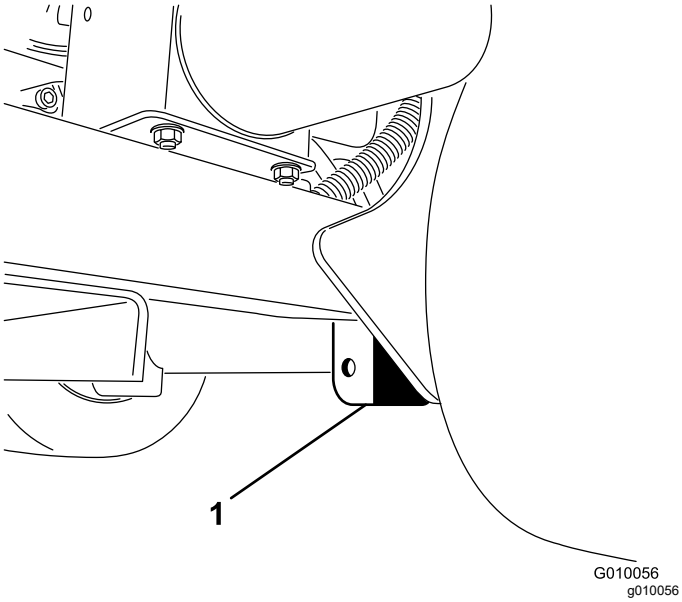

Figure 39

1. Frame plate

Note: If available, use a hoist to lift the rear of the machine. Use the eyelets in the coring head bearing housings as hoist attachment points (Figure 40).

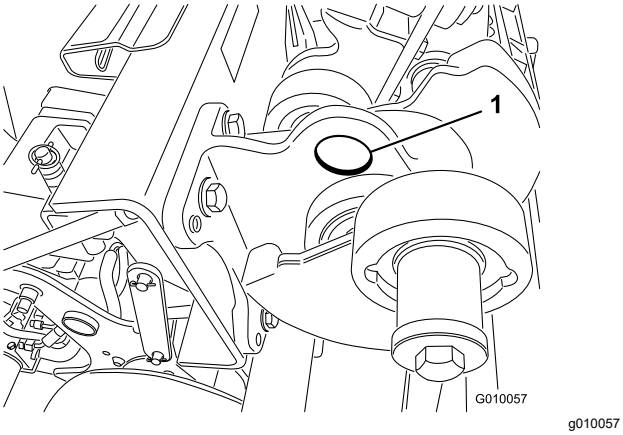

Figure 40

1. Eyelet

4. Jack (or lift) the rear of the machine off the ground.
5. Position the jack stands or hardwood blocks under the frame to support the machine.

Lubrication

Checking the Coring Head Bearings

Service Interval: Yearly—Check the coring head bearings.

Every 500 hours—Inspect the coring head bearings, if needed, replace.

The machine has no grease fittings that must be lubricated.

Important: **Bearings rarely fail from defects in materials or workmanship. The most common reason for failure is moisture and contamination working its way past the protective seals. Bearings that are greased rely upon regular maintenance to purge harmful debris from the bearing area. Sealed bearings rely on an initial fill of special grease and a robust integral seal to keep contaminants and moisture out of the rolling elements.**

The sealed bearings require no lubrication or short term maintenance. This minimizes routine service required and reduces the potential of turf damage due to grease contamination. These sealed bearing packages provide good performance and life under normal use, but periodic inspections of bearing condition and seal integrity should be conducted to avoid downtime. Inspect the bearings seasonally and replace them if they are damaged or worn. Bearings should operate smoothly with no detrimental characteristics such as high heat, noise, looseness, or rust weeping.

Due to the operating conditions these bearing/seal packages are subject to (e.g., sand, turf chemicals, water, impacts, etc.) they are considered normal wear items. Bearings that fail due to causes other than defects in materials or workmanship are typically not covered under warranty.

Note: You can negatively affect bearing by using improper wash down procedures. Do not wash down the machine when it is still hot and avoid directing high-pressure or high volume spray at the bearings.

It is common for new bearings to purge some grease out the seals on a new machine. This purged grease turns black in color due to collection of debris and not due to excessive heat. It is good practice to wipe this excess grease from the seals after the initial 8 hours. There may always appear to be a wet area around the seal lip. This is not detrimental to bearing life, and keeps the seal lip lubricated.

Engine Maintenance

Engine Safety

- Shut off the engine before checking the oil or adding oil to the crankcase.
- Do not change the governor speed or overspeed the engine.

Servicing the Air Cleaner

Service Interval: Every 25 hours—Clean the foam air filter element and check the paper element for damage.

Every 100 hours—Replace the paper air filter element.

Removing the Filters

1. Park the machine on a level surface, shut off the engine, engage the parking brake, and remove the key.
2. Clean around the air cleaner to prevent dirt from getting into the engine and causing damage.
3. Unscrew the knob and remove the air-cleaner cover (Figure 41).

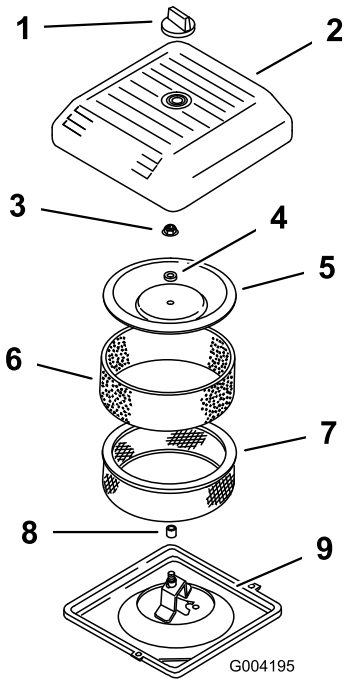

g004195

Figure 41

1. Knob
2. Air-cleaner cover
3. Cover nut
4. Spacer
5. Cover
6. Foam pre-filter
7. Paper filter
8. Rubber seal
9. Air-cleaner base

4. Carefully slide the foam pre-filter off the paper element (Figure 41).
5. Unscrew the cover nut and remove the cover, spacer, and paper filter (Figure 41).

Cleaning the Foam Pre-Filter

Important: **Replace the foam element if it is torn or worn.**

1. Wash the foam pre-filter in liquid soap and warm water. When clean, rinse it thoroughly.
2. Dry the pre-filter by squeezing it in a clean cloth (do not wring).
3. Put 3 to 6 cl (1 to 2 fl oz) of oil on the pre-filter (Figure 42).

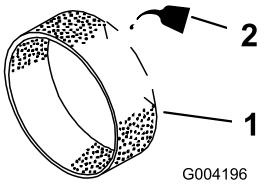

g004196

Figure 42

1. Foam element
2. Oil

4. Squeeze the pre-filter to distribute the oil.
5. Inspect the paper filter for tears, an oily film, and damage to the rubber seal (Figure 43).

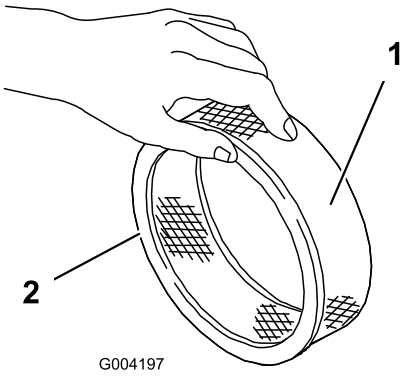

g004197

Figure 43

1. Paper element
2. Rubber seal

Important: **Never clean the paper element. Replace the paper element if it is dirty or damaged.**

Installing the Filters

Important: **To prevent engine damage, always operate the engine with the complete foam and paper air cleaner assembly installed.**

1. Carefully slide the foam pre-filter onto the paper filter (Figure 43).
2. Place the air cleaner assembly onto the air cleaner base (Figure 41).
3. Install the cover, spacer and secure it with the cover nut (Figure 41). Torque the nut to 11 N·m (95 in-lb).
4. Install the air cleaner cover and secure with the knob (Figure 41).

Engine Oil Specification

Oil Type: High-quality, detergent engine oil (API service SJ or higher)

Viscosity: See table below

USE THESE SAE VISCOSITY OILS

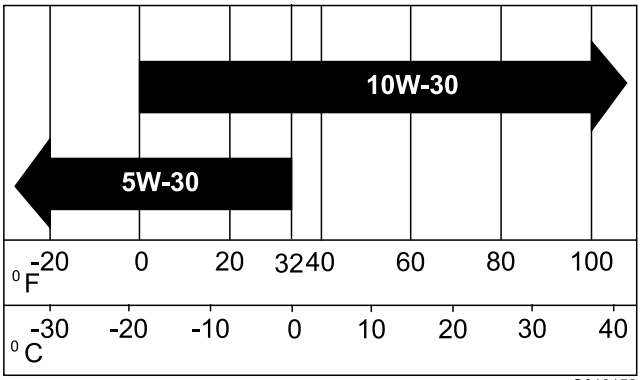

G010152
g010152

Figure 44

Checking the Engine-Oil Level

Service Interval: Before each use or daily (Check the oil when the engine is cold.)

The engine is shipped with oil in the crankcase; however, check the oil level before and after the engine is first started.

Use high-quality engine oil as described in Engine Oil Specification (page 36).

Important: **Do not overfill the crankcase with oil because this may cause engine damage.**
Do not run the engine with oil below the low mark because the engine may be damaged as a result.

Note: The best time to check the engine oil is when the engine is cool before it has been started for the day. If it has already been run, allow the oil to drain back down to the sump for at least 10 minutes before checking.

1. Park the machine on a level surface, shut off the engine, engage the parking brake, and remove the key.
2. Clean around the oil dipstick (Figure 45) so dirt cannot fall into the filler hole and damage the engine.

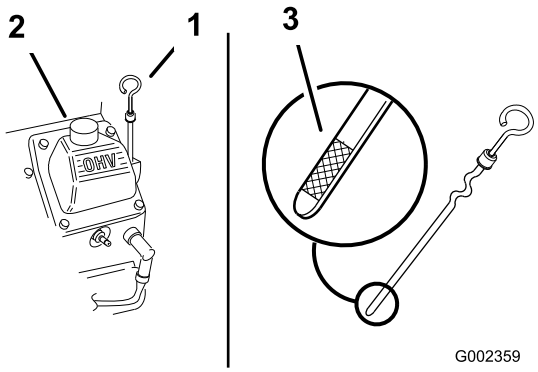

G002359
g002359

Figure 45

1. Dipstick
2. Filler tube
3. Metal end of the dipstick

3. Remove the dipstick, wipe it clean, and install until it is fully seated (Figure 45).
4. Remove the dipstick and check the oil level.

   The oil level should be between the “F” full and “L” low marks on the dipstick (Figure 45).
5. If the oil level is below the “L” low mark, remove the filler tube cap (Figure 45) and add the specified oil until the level reaches the “F” full mark on the dipstick.
6. Install the oil fill cap and dipstick.

Changing the Engine Oil and Filter

Service Interval: After the first 50 hours

Every 100 hours—Change the engine oil and filter.

Crankcase capacity: approximately 1.9 L (2.0 US qt) with the filter.

1. Start the engine and let it run for 5 minutes. This warms the oil so that it drains better.
2. Park the machine so that the drain side is slightly lower than the opposite side to ensure that the oil drains completely, shut off the engine, engage the parking brake, and remove the key.
3. Place a pan below the oil drain. Remove the oil drain plug to allow oil to drain.

4. When the oil has drained completely, replace the plug.

   Note: Dispose of the used oil at a certified recycling center.

5. Place a shallow pan or rag under the filter to catch oil (Figure 46).

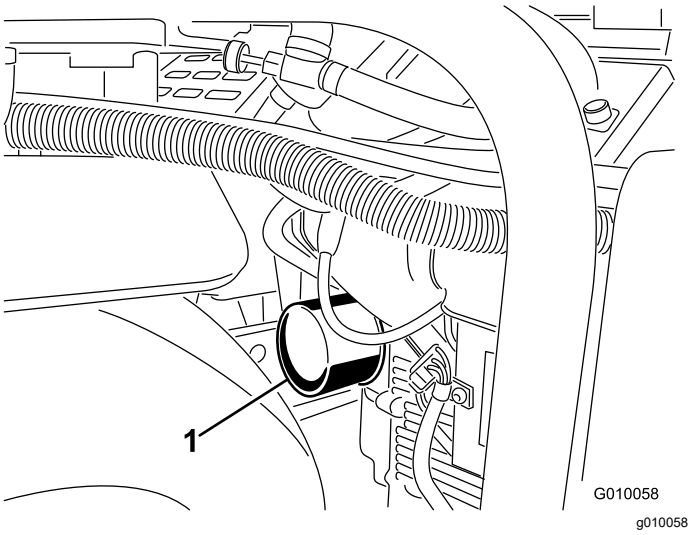

Figure 46

1. Oil filter

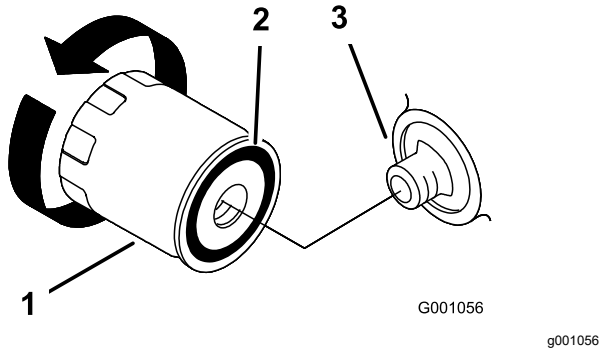

Figure 47

1. Oil filter
2. Gasket
3. Adapter

6. Remove the old filter (Figure 46 and Figure 47) and wipe the surface of the filter adapter gasket.
7. Pour new oil of the proper type through the center hole of the filter. Stop pouring when the oil reaches the bottom of the threads.
8. Allow a minute or 2 for the oil to be absorbed by filter material, then pour off the excess oil.
9. Apply a thin coat of new oil to the rubber gasket on the replacement filter.
10. Install the replacement oil filter to the filter adapter. Turn the oil filter clockwise until the rubber gasket contacts the filter adapter, then tighten the filter an additional 1/2 turn.
11. Remove the oil fill cap and slowly pour approximately 80% of the specified amount of oil in through the valve cover.
12. Check the oil level; refer to Checking the Engine-Oil Level (page 36).
13. Slowly add additional oil to bring the level to the F (full) mark on the dipstick.
14. Install the oil fill cap and dipstick.

Servicing the Spark Plugs

Service Interval: Every 200 hours—Check the spark plugs.

Ensure that the air gap between the center and side electrodes is correct before installing each spark plug. Use a spark-plug wrench for removing and installing the spark plugs and a gapping tool/feeler gauge to check and adjust the air gap. Install new spark plugs if necessary.

Type: Champion RC12YC or equivalent. Air Gap: 0.75 mm (0.03 inch)

Removing the Spark Plugs

1. Shut off the engine, engage the parking brake, and remove the key.
2. Pull the wires off the spark plugs (Figure 48).

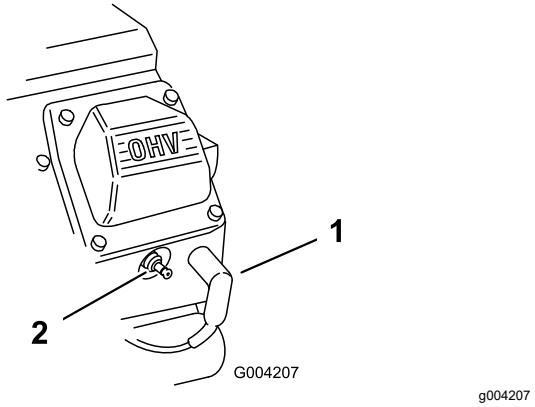

Figure 48

1. Spark-plug wire
2. Spark plug

3. Clean around the spark plugs.
4. Remove both spark plugs and metal gaskets.

Checking the Spark Plugs

1. Look at the center of both spark plugs (Figure 49). If you see light brown or gray on the insulator, the engine is operating properly. A black coating on the insulator usually means the air cleaner is dirty.

Important: **Never clean the spark plugs. Always replace the spark plugs when they have a black coating, worn electrodes, an oily film, or cracks.**

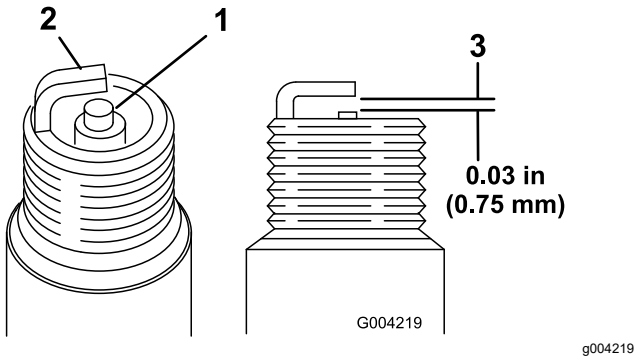

Figure 49

1. Center electrode insulator
2. Side electrode
3. Air gap (not to scale)

2. Check the gap between the center and side electrodes (Figure 49).
3. Bend the side electrode (Figure 49) if the gap is not correct.

Installing the Spark Plugs

1. Thread the spark plugs into the spark plug holes.
2. Tighten the spark plugs to 27 N·m (20 ft-lb).
3. Push the wires onto the spark plugs (Figure 48).

Cleaning the Engine Screen

Service Interval: Before each use or daily (Clean more frequently in dirty operating conditions.)

Before each use, check and clean the engine screen. Remove any buildup of grass, dirt, or other debris from the engine air intake screen.

Fuel System Maintenance

⚠ DANGER

Under certain conditions, fuel and fuel vapors are highly flammable and explosive. A fire or explosion from fuel can burn you and others and can cause property damage.

- **Fill the fuel tank outdoors, in an open area, when the engine is off and is cold. Wipe up any fuel that spills.**
- **Do not fill the fuel tank completely full. Add fuel to the fuel tank until the level is 25 mm (1 inch) below the top of the tank, not the filler neck. This empty space in the tank allows the fuel to expand.**
- **Never smoke when handling fuel, and stay away from an open flame or where a spark may ignite fuel fumes.**
- **Store fuel in a clean, safety-approved container and keep the cap in place.**

Replacing the Fuel Filter

Service Interval: Every 100 hours/Yearly (whichever comes first)

Important: **Never install a dirty filter if it is removed from the fuel line.**

1. Allow the machine to cool down.
2. Close the fuel-shutoff valve (Figure 50).

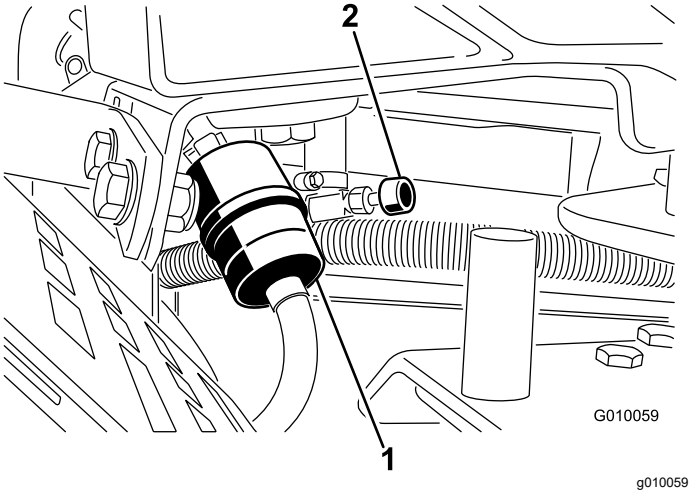

Figure 50

1. Fuel filter
2. Fuel-shutoff valve

3. Squeeze the ends of the hose clamps together and slide them away from the filter (Figure 50).
4. Remove the filter from the fuel lines.

5. Install a new filter and move the hose clamps close to the filter (Figure 50).
6. Wipe up any spilled fuel.
7. Open the fuel-shutoff valve (Figure 50).

Draining the Fuel Tank

⚠ DANGER

In certain conditions, fuel is extremely flammable and highly explosive. A fire or explosion from fuel can burn you and others and can damage property.

- **Drain fuel from the fuel tank when the engine is cold. Do this outdoors in an open area. Wipe up any fuel that spills.**
- **Never smoke when draining fuel, and stay away from an open flame or where a spark may ignite the fuel fumes.**

1. Park the machine on a level surface, shut off the engine, engage the parking brake, and remove the key.
2. Close the fuel-shutoff valve (Figure 50).
3. Loosen the hose clamp at the fuel filter and slide it up the fuel line away from the fuel filter (Figure 50).
4. Pull the fuel line off the fuel filter (Figure 50). Open the fuel-shutoff valve and allow fuel to drain into a fuel can or drain pan.

   Note: Now is the best time to install a new fuel filter because the fuel tank is empty.
5. Install the fuel line onto the fuel filter. Slide the hose clamp close to the fuel filter to secure the fuel line (Figure 50).

Electrical System Maintenance

Electrical System Safety

- Disconnect the battery before repairing the machine. Disconnect the negative terminal first and the positive last. Connect the positive terminal first and the negative last.
- Charge the battery in an open, well-ventilated area, away from sparks and flames. Unplug the charger before connecting or disconnecting the battery.
- Wear protective clothing and use insulated tools.

WARNING

CALIFORNIA
Proposition 65 Warning

Battery posts, terminals, and related accessories contain lead and lead compounds, chemicals known to the State of California to cause cancer and reproductive harm. Wash hands after handling.

Servicing the Battery

Checking the Electrolyte Level

Service Interval: Every 25 hours—Check the electrolyte level and clean the battery. If machine is in storage, every 30 days.

⚠ DANGER

Battery electrolyte contains sulfuric acid, which is fatal if consumed and causes severe burns.

- **Do not drink electrolyte and avoid contact with skin, eyes, or clothing. Wear safety glasses to shield your eyes and rubber gloves to protect your hands.**
- **Fill the battery where clean water is always available for flushing the skin.**

Maintain proper battery electrolyte level and keep the top of the battery clean. If the machine is stored in a location where temperatures are extremely high, the battery runs down more rapidly than if you store the machine in a location where temperatures are cool.

1. Keep the top of the battery clean by washing it periodically with a brush dipped in ammonia or bicarbonate of soda solution.

   Important: **Do not remove the fill caps while cleaning.**
2. Flush the top surface with water after cleaning.
3. Remove the battery-cell caps and check the electrolyte level.
4. If needed, add distilled or demineralized water until the electrolyte level is at the bottom of the split ring inside each cell.

   Important: **Do not fill the cells with water.**
5. Install the cell caps.

Checking the Battery Connections

Service Interval: Yearly—Check the battery cable connections.

⚠ WARNING

Battery terminals or metal tools could short against metal tractor components, causing sparks. Sparks can cause the battery gasses to explode, resulting in personal injury.

- **When removing or installing the battery, do not allow the battery terminals to touch any metal parts of the machine.**
- **Do not allow metal tools to short between the battery terminals and metal parts of the machine.**

⚠ WARNING

Incorrect battery cable routing could damage the machine and cables causing sparks. Sparks can cause the battery gasses to explode, resulting in personal injury.

- **Always *disconnect* the negative (black) battery cable before disconnecting the positive (red) cable.**
- **Always *connect* the positive (red) battery cable before connecting the negative (black) cable.**

1. Unlatch and open the battery compartment cover.
2. Check that the battery-cable clamps are secure.

   Tighten loose battery-cable clamps hardware.
3. Check the battery-cable clamps and battery terminals for corrosion.
4. If the terminals are corroded, remove the negative battery cable.
5. Remove the positive battery cable.
6. Clean cable clamps and battery terminals.
7. Connect the positive battery cable.
8. Connect the negative battery cable.
9. Coat the cable terminals and battery posts with Grafo 112X skin-over grease (Toro Part No. 505-47).
10. Close and latch the battery compartment cover.

Checking the Fuses

The electrical system is protected by fuses (Figure 51). It requires no maintenance; however, if a fuse blows, check the component/circuit for a malfunction or short.

1. To replace fuses, pull out on the fuse to remove it.
2. Install a new fuse.

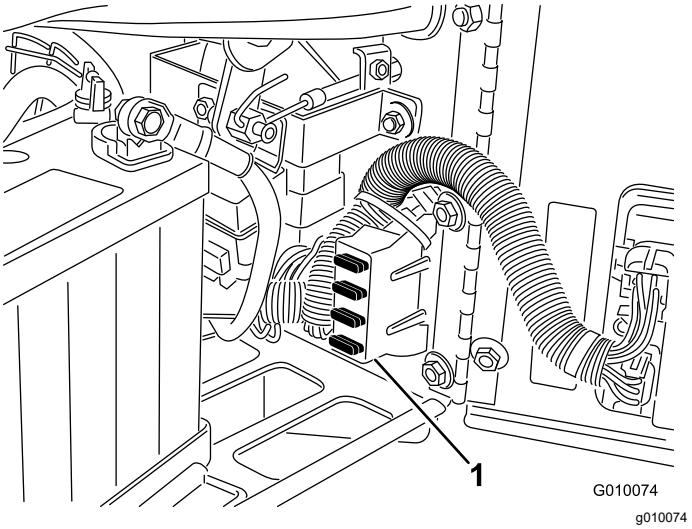

Figure 51

1. Fuse block

Aerator Control Module (ACM)

The Aerator Control Module is a potted electronic device produced in a 1-size-fits-all configuration. The module uses solid-state and mechanical components to monitor and control electrical features required for safe product operation.

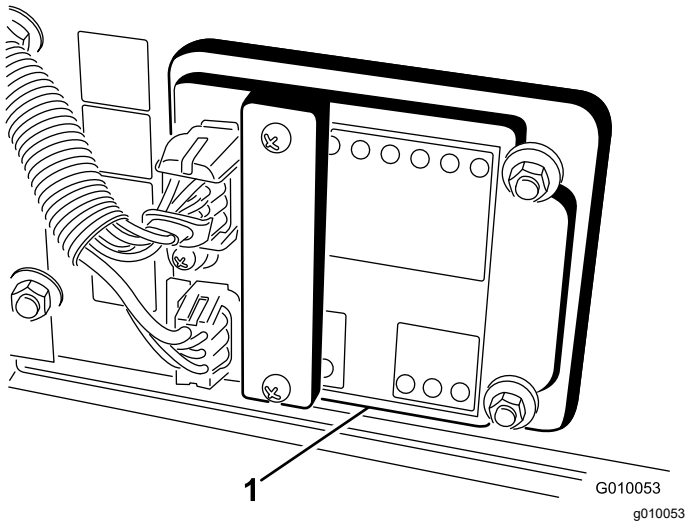

Figure 52

1. Aerator control module

The module monitors inputs including head low, head high, transport, aerate, and ground following. The module is divided into inputs and outputs. Inputs and outputs are identified by green LED indicators mounted on the printed circuit board. Power is identified by a red LED indicator.

The start circuit input is energized by 12 VDC. All other inputs are energized when the circuit is closed to ground. Each input has an LED that illuminates when the specific circuit is energized. Use the input LEDs for switch and input circuit troubleshooting.

Output circuits are energized by an appropriate set of input conditions. The 3 outputs include SVL, SVR, and SVQ. Output LEDs monitor relay conditions indicating the presence of voltage at 1 of 3 specific output terminals.

Output circuits do not determine output device integrity, so electrical troubleshooting includes output LED inspection and conventional device and wire harness integrity testing. Measure disconnected component impedance, impedance through wire harness (disconnect at ACM), or by temporarily test energizing the specific component.

The ACM does not connect to an external computer or handheld device, cannot be reprogrammed, and does not record intermittent fault troubleshooting data.

The decal on the ACM includes only symbols. 3 LED output symbols are shown in the output box. All other LEDs are inputs. The chart below identifies the symbols.

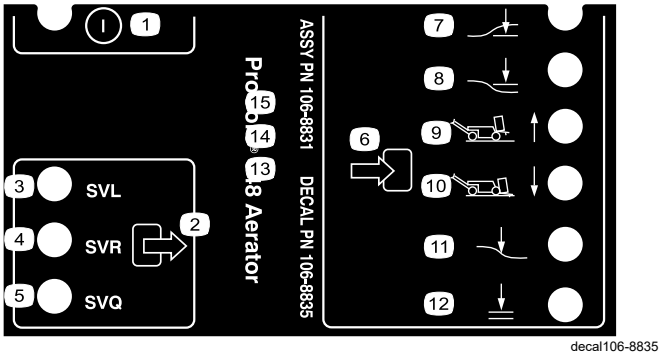

Figure 53

1.	On/off	7.	Head low
2.	Output	8.	Head high
3.	Solenoid valve lower	9.	Transport (1)
4.	Solenoid valve raise	10.	Aerate (4)
5.	Solenoid valve quick	11.	Ground following
6.	Input	12.	OK to lower

The following are logical troubleshooting steps for the ACM device:

1. Determine the output fault you are trying to resolve.
2. Move the key switch to the ON position and ensure that the red power LED illuminates.
3. Move all input switches to ensure that all LEDs change state.
4. Position input devices at the appropriate position to achieve the appropriate output.
5. If specific output LED illuminates without appropriate output function, check output harness, connections, and component. Repair as required.
6. If specific output LED does not illuminate, check both fuses.
7. If specific output LED does not illuminate and inputs are in appropriate condition, install new ACM and determine if a fault disappears.

Drive System Maintenance

Checking the Tire Pressure

Service Interval: Every 50 hours/Monthly (whichever comes first)

Park the machine on a level surface, shut off the engine, engage the parking brake, and remove the key.

Check to ensure that the air pressure in all tires is 83 kPa (12 psi). Check the tires when they are cold to get the most accurate pressure reading.

Important: **Uneven tire pressure can cause uneven coring depth.**

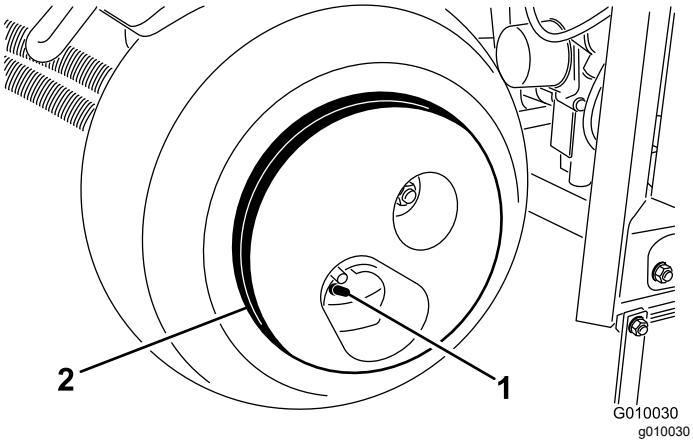

Figure 54

1. Valve stem
2. Wheel weight

⚠ CAUTION

The wheel weight is very heavy, 33 kg (73 lb).

Use caution when removing it from the tire assembly.

Adjusting the Traction Drive for Neutral

The machine must not creep when you release the traction bail. If it does, an adjustment is required.

1. Park the machine on a level surface, shut off the engine, engage the parking brake, and remove the key.
2. Jack up the machine so the front wheel and 1 rear wheel is just off the ground. Place jack stands under machine. Refer to Lifting the Machine (page 33).
3. Loosen the locknut on the traction adjustment cam (Figure 55).

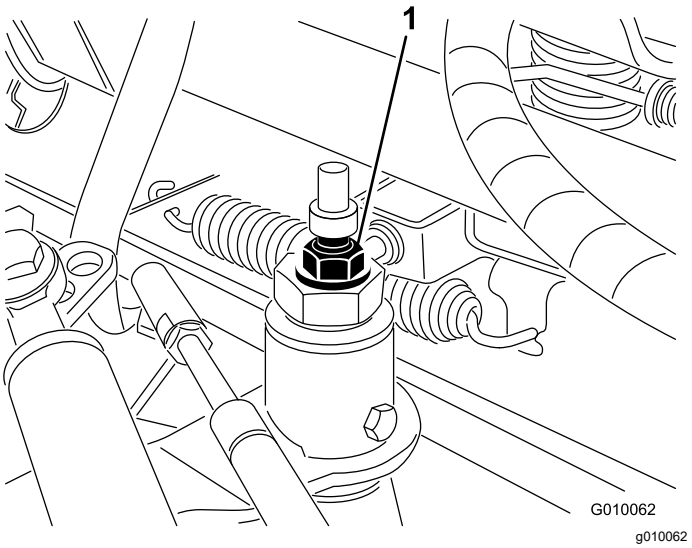

Figure 55

1. Traction adjustment cam

4. Start engine and disengage the parking brake.

⚠ WARNING

The engine must be running so that you can make the final adjustment on the traction adjustment cam. This could cause personal injury.

Keep your hands, feet, face, and other body parts away from the muffler, other hot parts of the engine and any rotating parts.

5. Rotate the cam hex in either direction until the wheels do not rotate.
6. Tighten the locknut securing the adjustment.
7. Shut off the engine.
8. Remove the jack stands and lower the machine to the ground.
9. Test the machine to make sure that it does not creep.

Belt Maintenance

Adjusting the Pump Belt

Service Interval: After the first 8 hours

1. Park the machine on a level surface, shut off the engine, engage the parking brake, and remove the key.
2. Unlatch and remove the belt cover (Figure 56).

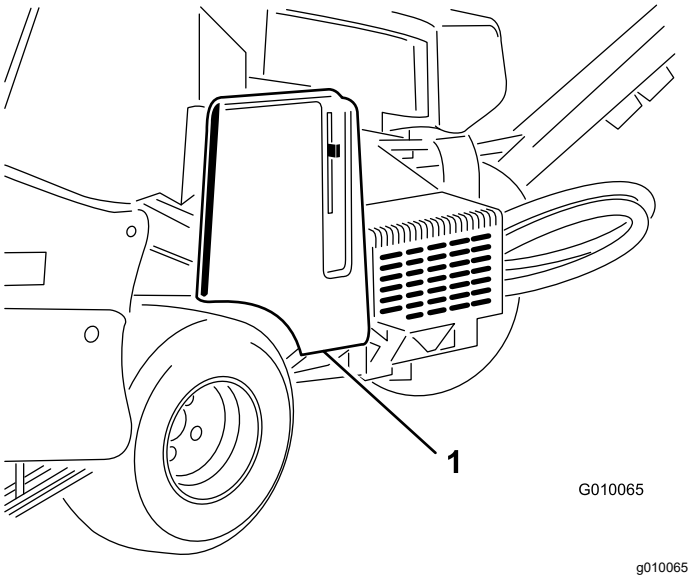

Figure 56

1. Belt cover

3. Remove the 2 pump shield mounting nuts and remove the shield (Figure 57).

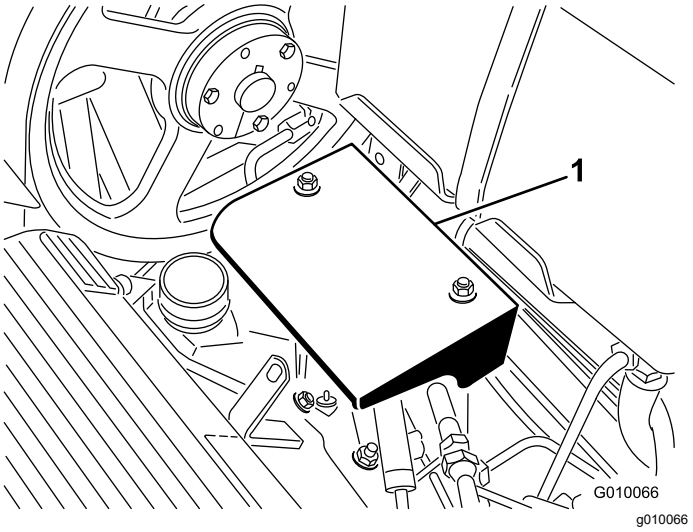

Figure 57

1. Pump shield

4. Loosen the pump belt idler bolt just enough to allow movement within the adjustment slot (Figure 58).

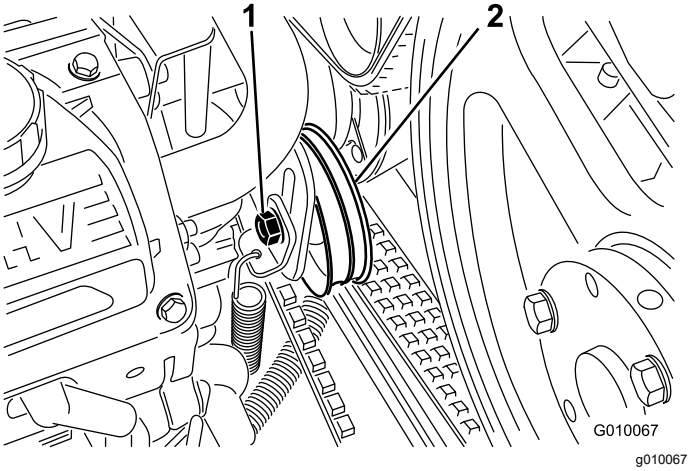

Figure 58

1. Idler bolt
2. Idler pulley

5. Tap the top of the idler pulley and allow the tensioning spring to adjust the belt tension.

   Note: Do not apply more belt tension than the tensioning spring allows as damage to the components may result.
6. Secure the belt idler bolt.
7. Install the pump shield and belt cover.

Inspecting the Belts

Service Interval: Yearly

The drive belts on the machine is durable. However, the normal exposure to UV radiation, ozone, or incidental exposure to chemicals can deteriorate the rubber over time and lead to premature wear or material loss (i.e., chunking).

Inspect the belts yearly for signs of wear, excessive cushion cracks, or large embedded debris. Replace them when needed. A complete belt service kit is available from your authorized Toro distributor.

Controls System Maintenance

Resetting the Ground Following System

If the True Core ground following system requires service of any kind (except for replacing the turf guard) or if the tine holders are contacting the turf guards when set in the deepest setting, you may need to reset the depth adjustment tie rod.

1. Park the machine on a level surface, shut off the engine, engage the parking brake, and remove the key.
2. Rotate the left turf guard mounting bracket (Figure 59) up until you can insert a locking pin, such as an 8 mm (5/16 in) drill rod or bolt, between the bracket and the depth setting tube welded to the frame.

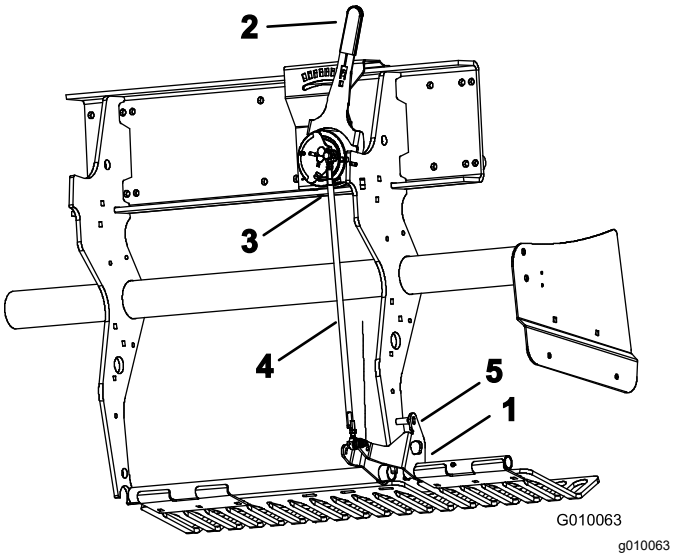

Figure 59

1. Turf guard mounting bracket
2. Tine depth lever
3. Out board ball switch
4. Depth adjustment tie rod
5. Locking pin

3. Move the tine depth lever (Figure 59) to the H setting (deepest).
4. Disconnect the outboard ball switch (Figure 59) from the wire harness (Head–Low switch).
5. Loosen the jam nuts (left and right) on the depth adjustment tie rod (Figure 59).
6. Use a multi-meter to determine the electrical closure of the ball switch.
7. Rotate the tie rod until the ball switch just closes or makes contact.
8. Secure the left and right jam nuts on the tie rod.
9. Connect the ball switch to the wire harness.
10. Remove the pin from the turf guard bracket and depth setting tube.

Hydraulic System Maintenance

Hydraulic System Safety

- Seek immediate medical attention if fluid is injected into skin. Injected fluid must be surgically removed within a few hours by a doctor.
- Ensure that all hydraulic-fluid hoses and lines are in good condition and all hydraulic connections and fittings are tight before applying pressure to the hydraulic system.
- Keep your body and hands away from pinhole leaks or nozzles that eject high-pressure hydraulic fluid.
- Use cardboard or paper to find hydraulic leaks.
- Safely relieve all pressure in the hydraulic system before performing any work on the hydraulic system.

Checking the Hydraulic Lines

Service Interval: Before each use or daily

Before each use, check the hydraulic lines and hoses for leaks, loose fittings, kinked lines, loose mounting supports, wear, weather and chemical deterioration. Make necessary repairs before operating.

Note: Keep the areas around the hydraulic system clean from debris buildup.

Hydraulic Fluid Specification

Toro Premium Transmission/Hydraulic Tractor Fluid
(Available in 5 gallon pails or 55 gallon drums. See parts catalog or Toro distributor for part numbers.)

Alternative fluids: If the specified fluid is not available, you may use other universal tractor hydraulic fluids (UTHF), but use only conventional, petroleum-based products, not synthetics or biodegradable fluids. The specifications must fall within the listed range for all the following material properties and the fluid should meet listed industry standards. Check with your fluid supplier to see if the fluid meets these specifications.

Note: Toro assumes no responsibility for damage caused by improper hydraulic fluid substitution, so use only products from reputable manufacturers who stand behind their recommendation.

Material Properties:	
Viscosity, ASTM D445	cSt @ 40°C (104°F) 55 to 62
Viscosity Index ASTM D2270	140 to 152
Pour Point, ASTM D97	-37°C to -43°C (-35°F to -46°F)
Industry Specifications: API GL-4, AGCO Powerfluid 821 XL, Ford New Holland FNHA-2-C-201.00, Kubota UDT, John Deere J20C, Vickers 35VQ25, and Volvo WB-101/BM	

Note: Many hydraulic fluids are almost colorless, making it difficult to spot leaks. A red dye additive for the hydraulic fluid is available in 20 ml (0.67 fl oz) bottles. One bottle is enough for 15 to 22 L (4 to 6 US gallons) of hydraulic fluid. Order part number 44-2500 from your authorized Toro distributor.

Checking the Hydraulic-Fluid Level

Service Interval: Before each use or daily

Important: **Check the level of the hydraulic fluid before the engine is first started and daily thereafter**

The hydraulic reservoir is filled at the factory with high-quality hydraulic fluid.

1. Park the machine on a level surface, shut off the engine, engage the parking brake, and remove the key.
2. Unlatch and remove the belt cover (Figure 60).

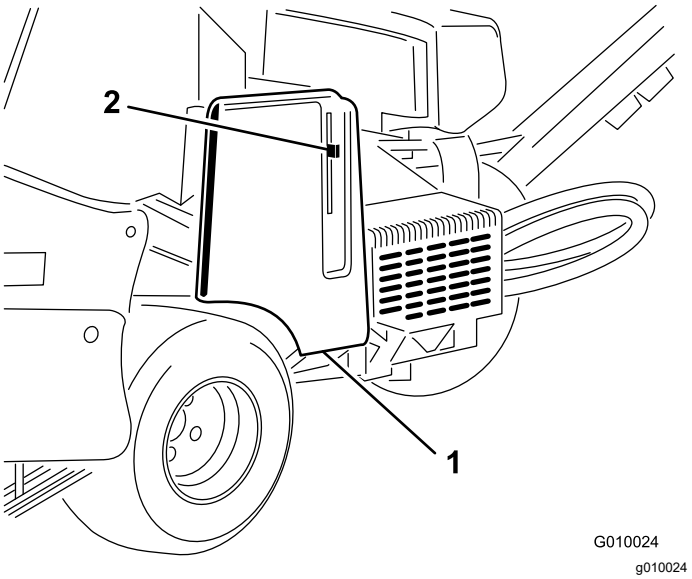

Figure 60

1. Belt cover
2. Cover latch

3. Clean the area around the filler neck and the cap of the hydraulic tank (Figure 61). Remove the cap from the filler neck.

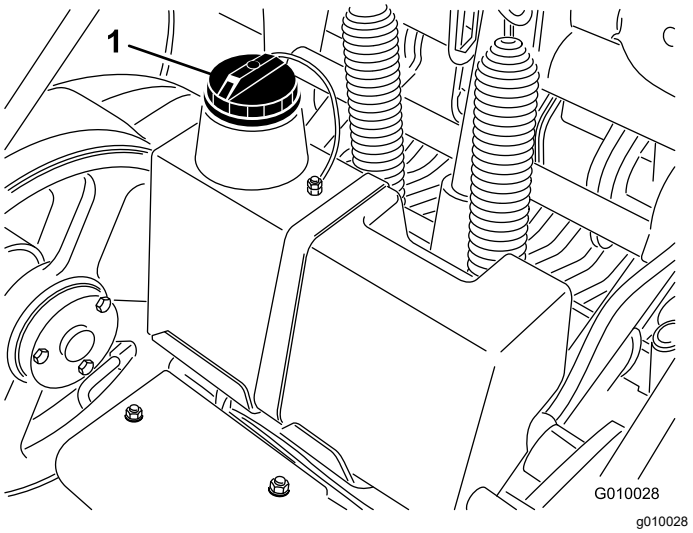

Figure 61

1. Hydraulic-tank cap

4. Remove the dipstick from the filler neck and wipe it with a clean rag. Insert the dipstick into the filler neck; then remove it and check the level of the fluid. The fluid level should be up to the mark on the dipstick (Figure 62).

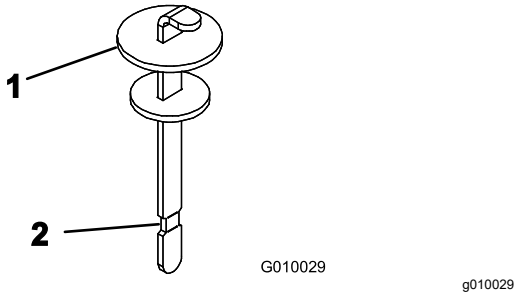

Figure 62

1. Dipstick
2. Full mark

5. If the level is low, add the specified hydraulic fluid to raise the level to the full mark.
6. Install the dipstick and cap onto the filler neck.

Changing the Hydraulic Fluid and Filters

Service Interval: After the first 8 hours

Every 200 hours

Hydraulic reservoir capacity: approximately 6.6 L (1.75 US gallons)

Important: **Do not substitute automotive oil filters or severe hydraulic system damage may result.**

Note: Removing the return filter drains the entire fluid reservoir.

1. Park the machine on a level surface, shut off the engine, engage the parking brake, and remove the key.
2. Place a drain pan under the filters, remove the old filters, and wipe the filter adapter gasket surface clean (Figure 63).

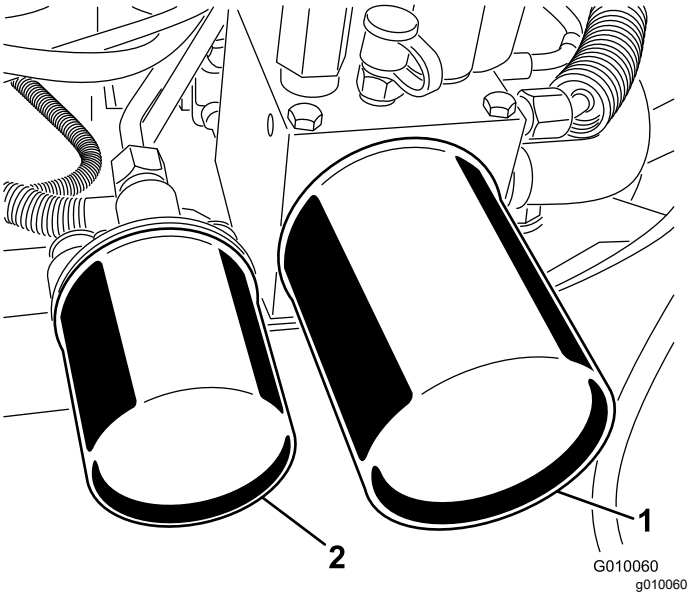

Figure 63

1. Hydraulic return filter
2. Hydraulic charge filter

3. Apply a thin coat of hydraulic fluid to the rubber gasket on the replacement filters.
4. Install the replacement hydraulic filters onto the filter adapters. Turn each filter clockwise until the rubber gasket contacts the filter adapter, then tighten each an additional 1/2 turn.
5. Add the specified hydraulic fluid until the fluid level is at the Full mark on the dipstick, refer to Checking the Hydraulic-Fluid Level (page 45).
6. Start the engine and let it run for about 2 minutes to purge air from the system. Shut off the engine and remove the key, and check for leaks.
7. Check the fluid level again while the fluid is warm. Add the specified hydraulic fluid to raise the level to the Full mark on the dipstick, if required.

   Note: Do not overfill the hydraulic reservoir with fluid.

Hydraulic System Test Ports

The test ports are used to test the pressure in the hydraulic circuits. Contact your authorized Toro distributor for assistance.

- Test Port G 2 (Figure 64) is used to assist in trouble shooting the traction charge circuit.

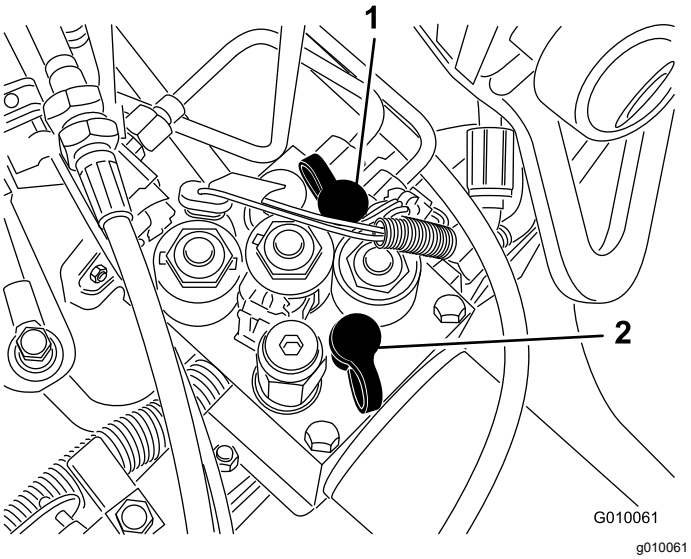

Figure 64

1. Test port G2
2. Test port G1

- Test Port G 1 (Figure 64) is used to assist in trouble shooting the lift circuit pressure.

Aerator Maintenance

Checking the Fastener Torque

Service Interval: After the first 8 hours

Park the machine on a level surface, shut off the engine, engage the parking brake, and remove the key.

Check the coring head fasteners, tiller handle fasteners, and wheel lug nuts to ensure that the proper torque is maintained. Fastener torque requirements are listed on the reference service decal located on the coring head.

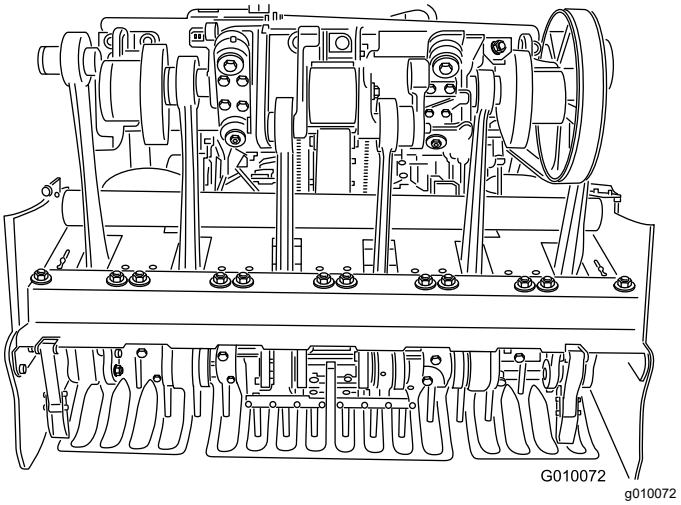

Figure 65

Adjusting the Side Shields

The coring head side shields should be adjusted so the bottom rides between 25 to 38 mm (1 to 1.5 inches) from the turf while aerating.

1. Park the machine on a level surface, shut off the engine, engage the parking brake, and remove the key.
2. Loosen the bolts and nuts securing the side shield to frame (Figure 66).

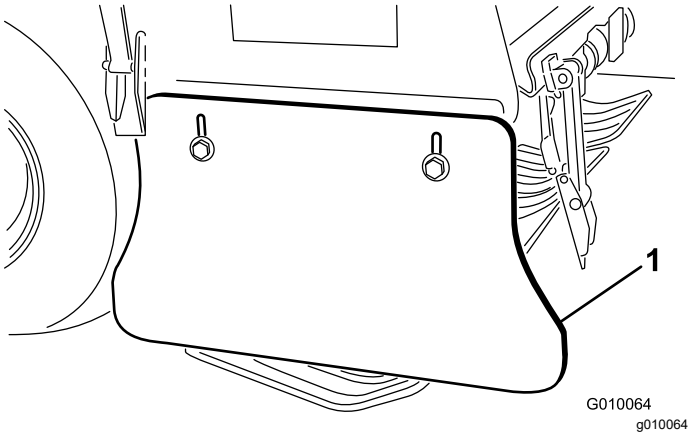

Figure 66

1. Side shield

3. Adjust the shield up or down and tighten the nuts.

Replacing the Turf Guards

All turf guards should be replaced if broken or worn to less than 6 mm (1/4 inch) thickness. Broken turf guards can catch and tear turf creating undesirable damage.

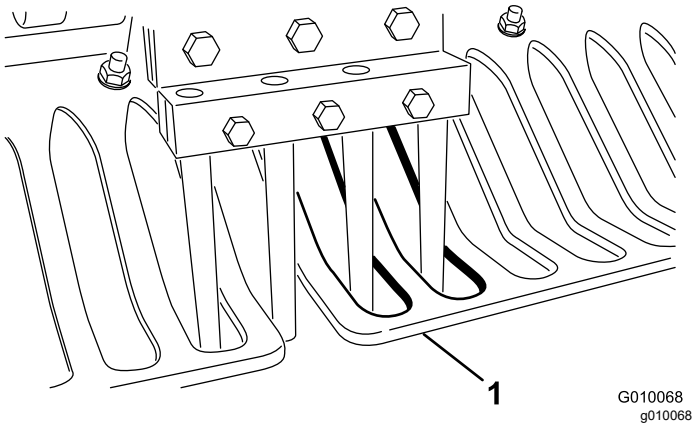

Figure 67

1. Turf guard

Thin turf guards can cause the True Core ground following system to be off from the desired depth setting due to both wear and the loss of stiffness.

Adjusting Hole Spacing

The hole spacing of the aerator is determined by the ground speed the traction system is set to maintain. The hole spacing is set to within 3 mm (1/8 inch) of the nominal setting at the factory.

In the event the hole spacing is off from the nominal setting more than desired, proceed as follows:

1. Park the machine on a level surface, shut off the engine, engage the parking brake, and remove the key.
2. Unlatch and remove the belt cover (Figure 56).
3. Remove the 2 pump shield mounting nuts and remove the shield (Figure 57).
4. In an open space that is free to aerate (i.e. sample plot), set the aerator spacing lever to the desired hole spacing and make an aeration pass of at least 4.5 m (15 ft).
5. Measure the distance between several holes and divide by the number of holes measured to get your average hole spacing.

   Example: Nominal Hole Spacing Setting of 2 inches:

   21.2 divided by 10 is 2.12, hole spacing is long by .12 inch from nominal (Figure 68).

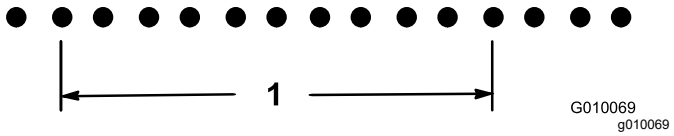

Figure 68

1. 21.2 inches (10 holes)

   18.8 divided by 10 is 1.88, hole spacing is short by 0.12 inch from nominal (Figure 69).

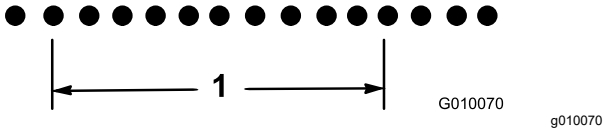

Figure 69

1. 18.8 inches (10 holes)

6. If an adjustment is needed, turn the pump stop bolt (Figure 70) closer to the stop plate to decrease hole spacing or turn the stop bolt away from the stop plate to increase hole spacing.

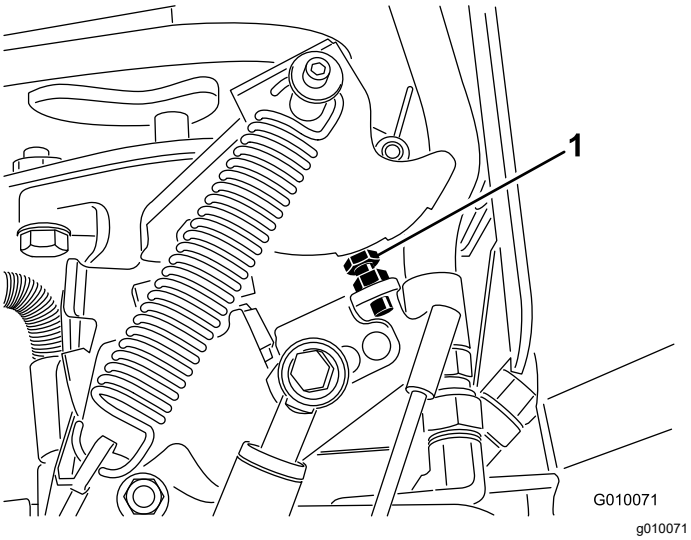

Figure 70

1. Pump stop bolt

7. Repeat steps 4 through 6 until spacing is at the nominal setting.

   Note: One complete turn of the stop bolt adjusts the hole spacing approximately 16 mm (5/8 inch).

Coring Head Timing

The coring head timing marks are easily identified by the marks in the casting.

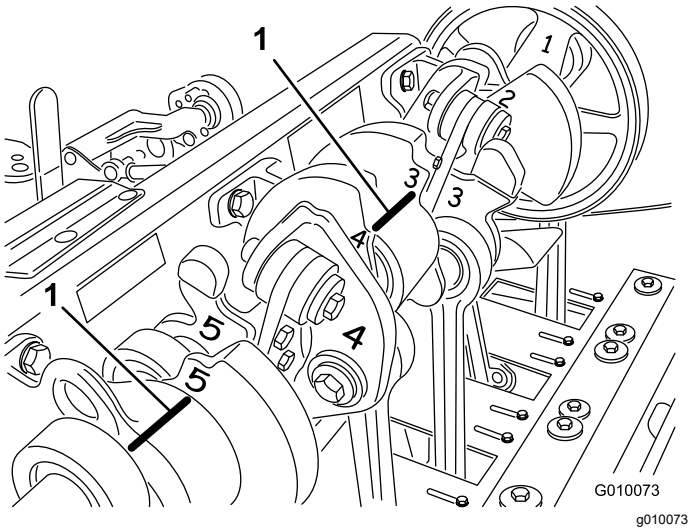

Figure 71

1. Timing marks

Storage

1. Park the machine on a level surface; engage the parking brake; shut off the engine; remove the key; and wait for all movement to stop before leaving the machine.
2. Disconnect the spark-plug wire.
3. Remove grass, dirt, and grime from the external parts of the entire machine, especially the engine and the hydraulic system. Clean dirt and chaff from the outside of the cylinder-head fins of the engine and blower housing.
4. Service the air cleaner; refer to Servicing the Air Cleaner (page 35).
5. Change the crankcase oil; refer to Changing the Engine Oil and Filter (page 36).
6. Change the hydraulic filters and fluid, refer to Changing the Hydraulic Fluid and Filters (page 46).
7. Check the tire pressure; refer to Checking the Tire Pressure (page 42).
8. Check the condition of the tines.
9. If you are storing the machine for more than 30 days, prepare it as follows:
   A. Remove the battery terminals from the battery posts and remove the battery from the machine.
   B. Clean the battery, terminals, and posts with a wire brush and baking soda solution.
   C. Coat the cable terminals and battery posts with Grafo 112X skin-over grease (Toro Part No. 505-47) or petroleum jelly to prevent corrosion.
   D. Slowly recharge the battery every 60 days for 24 hours to prevent lead sulfation of the battery. To prevent the battery from freezing, make sure it is fully charged. The specific gravity of a fully charged battery is 1.265 to 1.299.

   ⚠ WARNING

   Charging the battery produces gasses that can explode.

   Never smoke near the battery and keep sparks and flames away from it.

   E. Either store the battery on the shelf or on the machine. Leave the cables disconnected if it is stored on the machine. Store it in a cool atmosphere to avoid quick deterioration of the charge in the battery.

F. Add a petroleum-based stabilizer/conditioner to fuel in the tank. Follow mixing instructions from stabilizer manufacture. **Do not use an alcohol-based stabilizer (ethanol or methanol).**

Note: A fuel stabilizer/conditioner is most effective when mixed with fresh fuel and is always used.

G. Run the engine to distribute conditioned fuel through the fuel system for 5 minutes.

H. Shut off the engine, allow it to cool, and drain the fuel tank; refer to Draining the Fuel Tank (page 39).

I. Start the engine and run it until it shuts off.

J. Choke the engine. Start and run the engine until it does not start.

K. Dispose of fuel properly. Recycle it according to local codes.

Important: **Do not store fuel containing stabilizer/conditioner longer than the duration recommended by the fuel-stabilizer manufacturer.**

10. Remove the spark plugs and check the condition; refer to Servicing the Spark Plugs (page 37). With the spark plugs removed from the engine, pour 2 tablespoons of engine oil into each spark plug hole. Now use the starter to crank the engine and distribute the oil inside the cylinders. Install the spark plugs. Do not install the wires on the spark plugs.

11. Check and tighten all bolts, nuts, and screws. Repair or replace any part that is damaged or worn.

12. Wash and dry the entire machine. Remove the tines, and clean and oil them. Spray light oil mist on coring head bearings (crank and damper links).

Important: **You can wash the machine with mild detergent and water. Do not pressure-wash the machine. Avoid excessive use of water, especially near the control panel, engine, hydraulic pumps, and motors.**

Note: Run the machine with the engine at high idle for 2 to 5 minutes after washing.

13. Paint all scratched or bare metal surfaces. Paint is available from your authorized Toro distributor.

14. Secure service latch if the machine is to be stored for more than a couple of days.

15. Store the machine in a clean, dry garage or storage area. Remove the key from the ignition switch and keep it out of reach of children or other unauthorized users.

16. Cover the machine to protect it and keep it clean.

Troubleshooting

Problem	Possible Cause	Corrective Action
The starter does not crank.	1. The traction bail is not in the NEUTRAL position. 2. The battery is discharged. 3. The electrical connections are corroded or loose. 4. The neutral switch is incorrectly adjusted. 5. A relay or switch is malfunctioning.	1. Move the traction bail to the NEUTRAL position 2. Charge the battery. 3. Check the electrical connections for good contact. 4. Adjust the neutral switch. 5. Contact your authorized Toro distributor.
The engine does not start, starts hard, or fails to keep running.	1. The fuel tank is empty. 2. The choke is not on. 3. The air cleaner is dirty. 4. The spark-plug wires are loose or disconnected. 5. The spark plugs are pitted, fouled or the gap is incorrect. 6. There is dirt in the fuel filter. 7. There is dirt, water, or stale fuel in the fuel system.	1. Fill the fuel tank with fuel. 2. Move the choke lever fully forward. 3. Clean or replace air-cleaner element. 4. Install the wires on the spark plugs. 5. Install new, correctly gapped spark plugs. 6. Replace the fuel filter. 7. Contact your authorized Toro distributor.
The engine loses power.	1. The engine load is excessive. 2. The air cleaner is dirty. 3. The engine-oil level is low. 4. The cooling fins and air passages under the engine blower housing are plugged. 5. The spark plugs are pitted, fouled, or the gap is incorrect. 6. There is dirt in the fuel filter. 7. There is dirt, water, or stale fuel in the fuel system.	1. Reduce the ground speed. 2. Clean the air-cleaner element. 3. Add oil to the crankcase. 4. Remove any debris from the cooling fins and air passages. 5. Install new, correctly gapped spark plugs. 6. Replace the fuel filter. 7. Contact your authorized Toro distributor.
The engine overheats.	1. The engine load is excessive. 2. The engine-oil level is low. 3. The cooling fins and air passages under engine blower housing are plugged.	1. Reduce the ground speed. 2. Add oil to the crankcase. 3. Remove any debris from the cooling fins and air passages.
There is abnormal vibration.	1. The engine mounting bolts are loose. 2. The jackshaft or coring head bearings are worn. 3. The jackshaft or coring head components are loose or worn.	1. Tighten the engine mounting bolts. 2. Replace the bearings. 3. Tighten or replace components.
The machine does not drive.	1. The parking brake is engaged. 2. The hydraulic-fluid level is low. 3. The tow valve is open. 4. The hydraulic system is damaged.	1. Disengage the parking brake. 2. Add hydraulic fluid. 3. Close the tow valve. 4. Contact your authorized Toro distributor.

Problem	Possible Cause	Corrective Action
The coring head does not drive.	1. The hydraulic-fluid level is low. 2. The tow valve is open. 3. A belt is worn or loose. 4. The clutch is worn. 5. A switch or relay is worn. 6. The hydraulic system is damaged.	1. Add hydraulic fluid. 2. Close the tow valve. 3. Adjust or replace the belts. 4. Replace the clutch. 5. Replace the switch or relay. 6. Contact your authorized Toro distributor.
The head bounces while aerating.	1. The ground is too hard. 2. There is an issue with the relief setting / restriction orifice.	1. Refer to Operating Tips. 2. There is a dynamic response of the lift system. Adjust the system pressures. Refer to the Service Manual.
The turf is tufting/tearing on entrance and exit.	1. The switch bundle needs adjustment. 2. The head lowers too slowly.	1. Adjust the switch. Refer to the Service Manual. 2. Check the function of the SVQ solenoid.
There is an issue with quad (or mini) tine hole spacing.	1. The holes are not evenly spaced.	1. Check the spacing. Refer to Operating Tips.
There is hole tufting with side eject tines.	1. The ejection window is catching on exit.	1. Rotate the tine 45° to 90° so that it ejects out the side. If that does not work, try a hollow tine.
The turf is lifting/tearing while aerating.	1. Check the coring head attitude. 2. The tine diameter, spacing, or quantity is incorrect for the application. 3. The depth is excessive. 4. The hole spacing is too close. 5. The turf conditions (i.e. root structure) are insufficient to resist damage.	1. Refer to the Service Manual for specification. 2. Reduce the tine diameter, reduce the number of tines per head, or increase the hole spacing. 3. Reduce the depth. 4. Increase the hole spacing. 5. Alter the aeration methods or timing.
The front of the hole is dimpled or pushed.	1. Roto-Link is in the soft position.	1. Refer to Operating Tips.

Notes:

EEA/UK Privacy Notice

Toro's Use of Your Personal Information

The Toro Company ("Toro") respects your privacy. When you purchase our products, we may collect certain personal information about you, either directly from you or through your local Toro company or dealer. Toro uses this information to fulfil contractual obligations - such as to register your warranty, process your warranty claim or to contact you in the event of a product recall - and for legitimate business purposes - such as to gauge customer satisfaction, improve our products or provide you with product information which may be of interest. Toro may share your information with our subsidiaries, affiliates, dealers or other business partners in connection these activities. We may also disclose personal information when required by law or in connection with the sale, purchase or merger of a business. We will never sell your personal information to any other company for marketing purposes.

Retention of your Personal Information

Toro will keep your personal information as long as it is relevant for the above purposes and in accordance with legal requirements. For more information about applicable retention periods please contact legal@toro.com.

Toro's Commitment to Security

Your personal information may be processed in the US or another country which may have less strict data protection laws than your country of residence. Whenever we transfer your information outside of your country of residence, we will take legally required steps to ensure that appropriate safeguards are in place to protect your information and to make sure it is treated securely.

Access and Correction

You may have the right to correct or review your personal data, or object to or restrict the processing of your data. To do so, please contact us by email at legal@toro.com. If you have concerns about the way in which Toro has handled your information, we encourage you to raise this directly with us. Please note that European residents have the right to complain to your Data Protection Authority.

California Proposition 65 Warning Information

What is this warning?

You may see a product for sale that has a warning label like the following:

WARNING: Cancer and Reproductive Harm—www.p65Warnings.ca.gov.

What is Prop 65?

Prop 65 applies to any company operating in California, selling products in California, or manufacturing products that may be sold in or brought into California. It mandates that the Governor of California maintain and publish a list of chemicals known to cause cancer, birth defects, and/or other reproductive harm. The list, which is updated annually, includes hundreds of chemicals found in many everyday items. The purpose of Prop 65 is to inform the public about exposure to these chemicals.

Prop 65 does not ban the sale of products containing these chemicals but instead requires warnings on any product, product packaging, or literature with the product. Moreover, a Prop 65 warning does not mean that a product is in violation of any product safety standards or requirements. In fact, the California government has clarified that a Prop 65 warning "is not the same as a regulatory decision that a product is 'safe' or 'unsafe.'" Many of these chemicals have been used in everyday products for years without documented harm. For more information, go to https://oag.ca.gov/prop65/faqs-view-all.

A Prop 65 warning means that a company has either (1) evaluated the exposure and has concluded that it exceeds the "no significant risk level"; or (2) has chosen to provide a warning based on its understanding about the presence of a listed chemical without attempting to evaluate the exposure.

Does this law apply everywhere?

Prop 65 warnings are required under California law only. These warnings are seen throughout California in a wide range of settings, including but not limited to restaurants, grocery stores, hotels, schools, and hospitals, and on a wide variety of products. Additionally, some online and mail order retailers provide Prop 65 warnings on their websites or in catalogs.

How do the California warnings compare to federal limits?

Prop 65 standards are often more stringent than federal and international standards. There are various substances that require a Prop 65 warning at levels that are far lower than federal action limits. For example, the Prop 65 standard for warnings for lead is 0.5 µg/day, which is well below the federal and international standards.

Why don't all similar products carry the warning?

- Products sold in California require Prop 65 labelling while similar products sold elsewhere do not.
- A company involved in a Prop 65 lawsuit reaching a settlement may be required to use Prop 65 warnings for its products, but other companies making similar products may have no such requirement.
- The enforcement of Prop 65 is inconsistent.
- Companies may elect not to provide warnings because they conclude that they are not required to do so under Prop 65; a lack of warnings for a product does not mean that the product is free of listed chemicals at similar levels.

Why does Toro include this warning?

Toro has chosen to provide consumers with as much information as possible so that they can make informed decisions about the products they buy and use. Toro provides warnings in certain cases based on its knowledge of the presence of one or more listed chemicals without evaluating the level of exposure, as not all the listed chemicals provide exposure limit requirements. While the exposure from Toro products may be negligible or well within the "no significant risk" range, out of an abundance of caution, Toro has elected to provide the Prop 65 warnings. Moreover, if Toro does not provide these warnings, it could be sued by the State of California or by private parties seeking to enforce Prop 65 and subject to substantial penalties.

The Toro Warranty

A two-Year Limited Warranty

Conditions and Products Covered

The Toro Company and its affiliate, Toro Warranty Company, pursuant to an agreement between them, jointly warrant your Toro Hydroject or ProCore Aerator (“Product”) to be free from defects in materials or workmanship for two years or 500 operational hours*, whichever occurs first. This warranty is applicable to all products (refer to separate warranty statements for these products). Where a warrantable condition exists, we will repair the Product at no cost to you including diagnostics, labor, parts, and transportation. This warranty begins on the date the Product is delivered to the original retail purchaser.
* Product equipped with an hour meter.

Instructions for Obtaining Warranty Service

You are responsible for notifying the Commercial Products Distributor or Authorized Commercial Products Dealer from whom you purchased the Product as soon as you believe a warrantable condition exists. If you need help locating a Commercial Products Distributor or Authorized Dealer, or if you have questions regarding your warranty rights or responsibilities, you may contact us at:

Commercial Products Service Department
Toro Warranty Company
8111 Lyndale Avenue South
Bloomington, MN 55420-1196
952–888–8801 or 800–952–2740
E-mail: commercial.warranty@toro.com

Owner Responsibilities

As the Product owner, you are responsible for required maintenance and adjustments stated in your *Operator’s Manual*. Failure to perform required maintenance and adjustments can be grounds for disallowing a warranty claim.

Items and Conditions Not Covered

Not all product failures or malfunctions that occur during the warranty period are defects in materials or workmanship. This warranty does not cover the following:

- Product failures which result from the use of non-Toro replacement parts, or from installation and use of add-on, or modified non-Toro branded accessories and products. A separate warranty may be provided by the manufacturer of these items.
- Product failures which result from failure to perform recommended maintenance and/or adjustments. Failure to properly maintain your Toro product per the recommended maintenance listed in the *Operator’s Manual* can result in claims for warranty being denied.
- Product failures which result from operating the Product in an abusive, negligent or reckless manner.
- Parts subject to consumption through use unless found to be defective. Examples of parts which are consumed, or used up, during normal Product operation include, but are not limited to, brakes pads and linings, clutch linings, blades, reels, bed knives, tines, spark plugs, castor wheels, tires, filters, belts, and certain sprayer components such as diaphragms, nozzles, and check valves, etc.
- Failures caused by outside influence. Items considered to be outside influence include, but are not limited to, weather, storage practices, contamination, use of unapproved coolants, lubricants, additives, fertilizers, water, or chemicals, etc.
- Normal noise, vibration, wear and tear, and deterioration.
- Normal “wear and tear” includes, but is not limited to, damage to seats due to wear or abrasion, worn painted surfaces, scratched decals or windows, etc.

Parts

Parts scheduled for replacement as required maintenance are warranted for the period of time up to the scheduled replacement time for that part. Parts replaced under this warranty are covered for the duration of the original product warranty and become the property of Toro. Toro will make the final decision whether to repair any existing part or assembly or replace it. Toro may use remanufactured parts for warranty repairs.

Maintenance is at Owner’s Expense

Engine tune-up, lubrication cleaning and polishing, replacement of Items and Conditions Not Covered, filters, coolant, and completing recommended maintenance are some of the normal services Toro products require that are at the owner’s expense.

General Conditions

Repair by an Authorized Toro Distributor or Dealer is your sole remedy under this warranty.

Neither The Toro Company nor Toro Warranty Company is liable for indirect, incidental or consequential damages in connection with the use of the Toro Products covered by this warranty, including any cost or expense of providing substitute equipment or service during reasonable periods of malfunction or non-use pending completion of repairs under this warranty. Except for the Emissions warranty referenced below, if applicable, there is no other express warranty.

All implied warranties of merchantability and fitness for use are limited to the duration of this express warranty. Some states do not allow exclusions of incidental or consequential damages, or limitations on how long an implied warranty lasts, so the above exclusions and limitations may not apply to you.

This warranty gives you specific legal rights, and you may also have other rights which vary from state to state.

Note regarding engine warranty:

The Emissions Control System on your Product may be covered by a separate warranty meeting requirements established by the U.S. Environmental Protection Agency (EPA) and/or the California Air Resources Board (CARB). The hour limitations set forth above do not apply to the Emissions Control System Warranty. Refer to the Engine Emission Control Warranty Statement printed in your *Operator’s Manual* or contained in the engine manufacturer’s documentation for details

Countries Other than the United States or Canada

Customers who have purchased Toro products exported from the United States or Canada should contact their Toro Distributor (Dealer) to obtain guarantee policies for your country, province, or state. If for any reason you are dissatisfied with your Distributor's service or have difficulty obtaining guarantee information, contact the Toro importer. If all other remedies fail, you may contact us at Toro Warranty Company.