Form No. 3443-920 Rev A

BULLS•EYE™

Parts Catalog

AccuraSeed 620

Model No. 46430—Serial No. 321000001 and Up

Register at www.Toro.com/bullseye.
Original Instructions (EN)

3443-920 A

Ordering Replacement Parts

To order replacement parts, please supply the part number, the quantity, and the description of each part desired.

Understanding Reference Numbers

Each identified part in an illustration has a reference number. The reference number for a part also appears in the parts list, along with other information about the part.

This catalog uses two special reference number formats, one to indicate parts in a service assembly and another to indicate the quantity of a given part in an illustration.

Service Assembly Reference Numbers

Parts in service assemblies have reference numbers in the form a:b. The a represents the reference number of the entire service assembly and the b represents a sequential number unique to each part within the service assembly.

For example, a wheel assembly might be identified by reference number 6, the tire by 6:1, the valve by 6:2, and the wheel by 6:3. When you order the assembly identified by reference number 6, you receive all parts identified by reference numbers 6:1,6:2, and 6:3. However, you may also order any part individually. Reference numbers of this type appear in illustration and in parts lists.

Reference Numbers Indicating Quantity

In an illustration, if a reference number indicates more than one part, the reference number has the form nX y. The n represents the quantity of the part, the X is the multiplication symbol, and the y represents the reference number.

For example, in an illustration, the reference number 2X 37 means that two of the parts identified by reference number 37 are indicated.

Contents

Decals Assembly 4
Cover and Toolbox Assembly 6
Drive Assembly 8
Hopper Assembly 10
Hopper Components Assembly 12
Chain Drive Assembly 14
Seed Elements Assembly 16
Valve Adjustment Assembly 18
Frame and Rear Roller Assembly 20
Funnel Beam and Jacks Assembly 22
Disc Assembly 24
Wheel Drive Assembly 26
Weights Assembly 28
Gearbox Assembly 30
Attachments and Accessories 32

© 2021—Bullseye™
8111 Lyndale Avenue South
Bloomington, MN 55420

Contact us at www.Toro.com/bullseye.
Printed in the USA.
All Rights Reserved

Decals Assembly

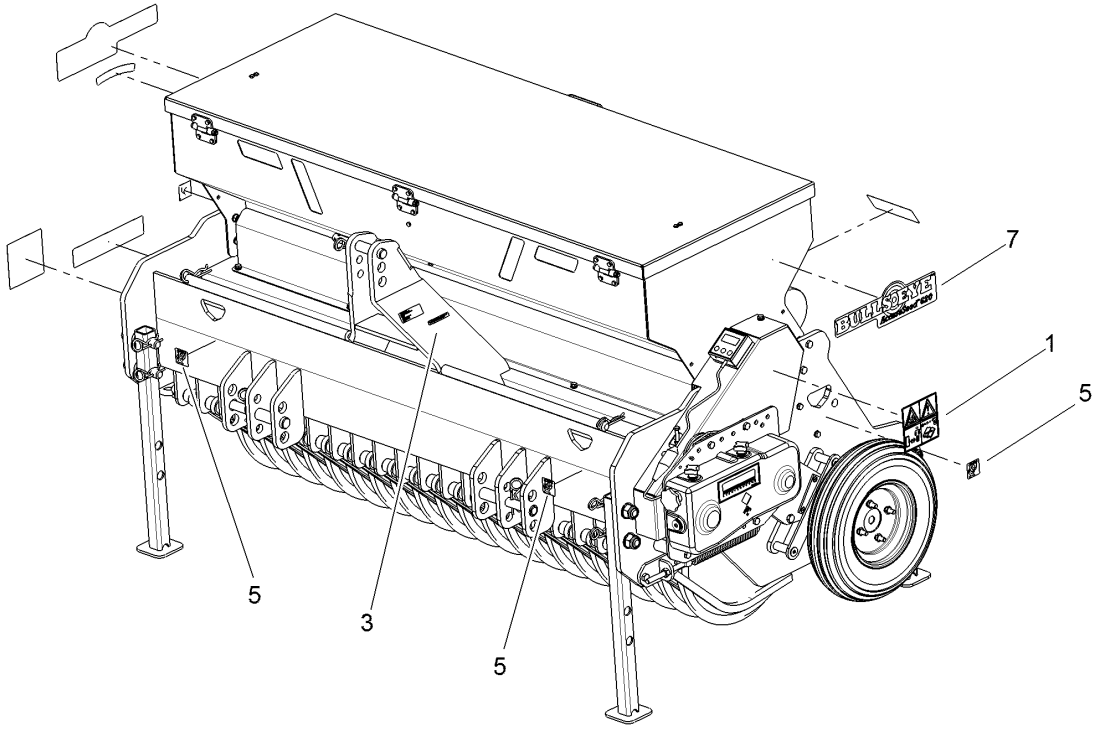

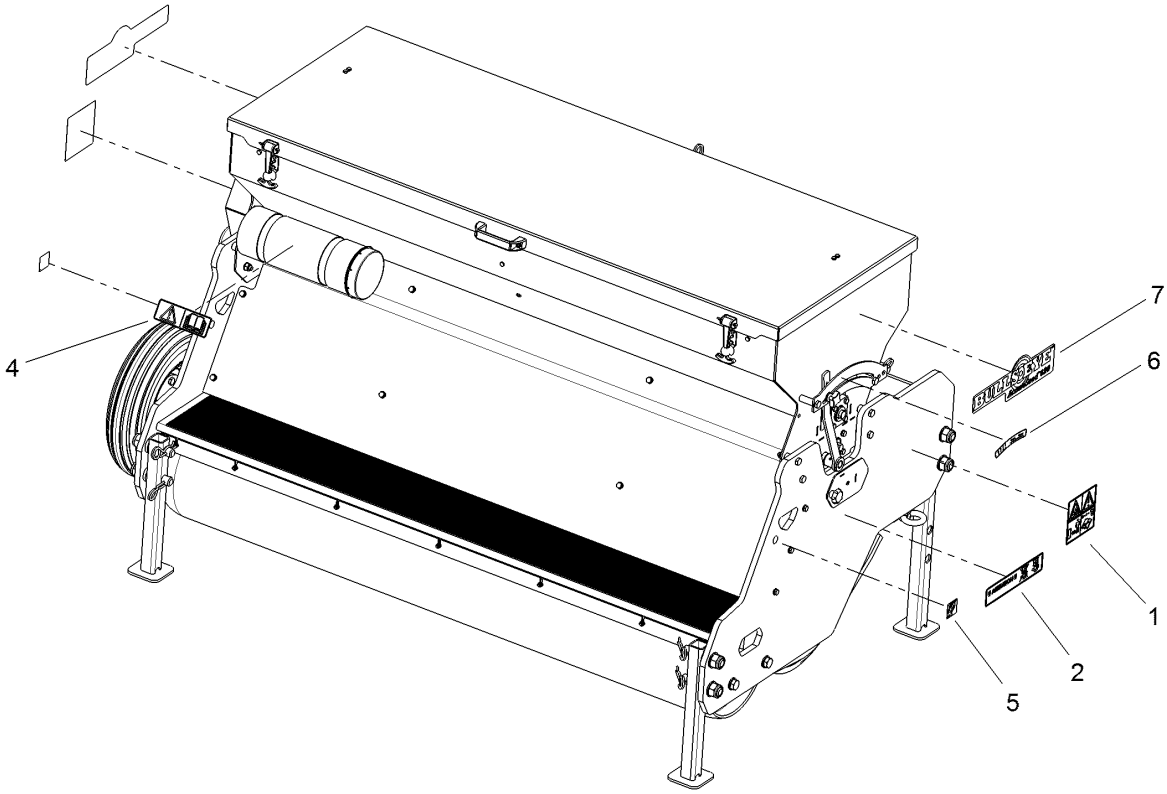

Decals Assembly (continued)

Ref.	Part Number	Qty.	Description
1	144-8257	2	Decal-Safety Vs
2	144-8552	1	Decal Funnel
3	133-8061	1	Decal-Warning
4	105-0698	1	Decal-Caution
5	144-8553	4	Decal Fixation Point
6	144-8554	1	Decal Adjustment Valve
7	136-3669	2	Decal-Accuraseed 620

Cover and Toolbox Assembly

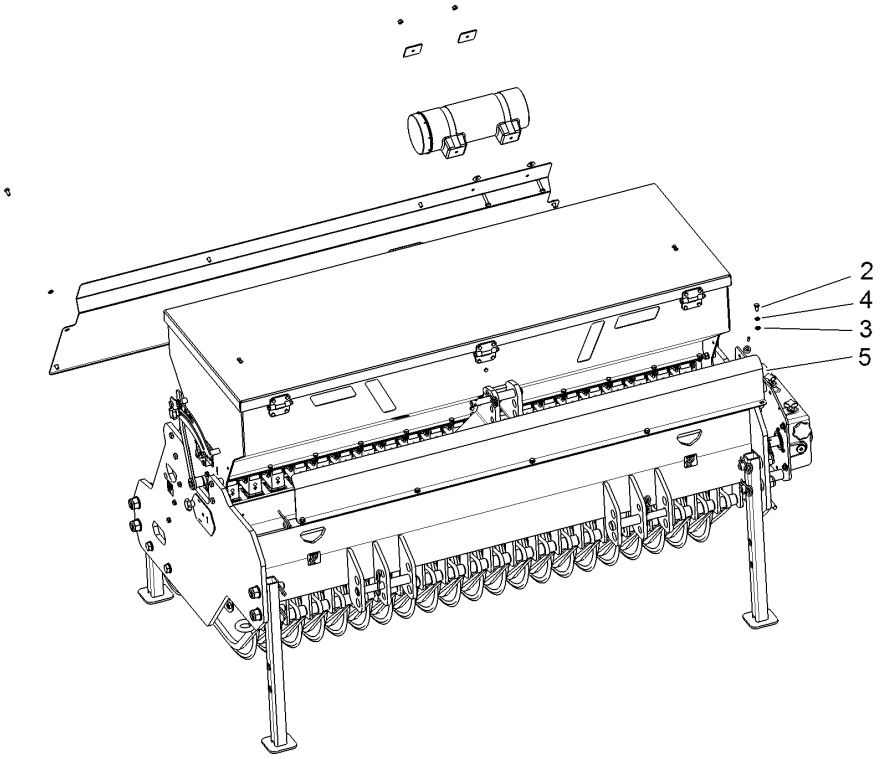

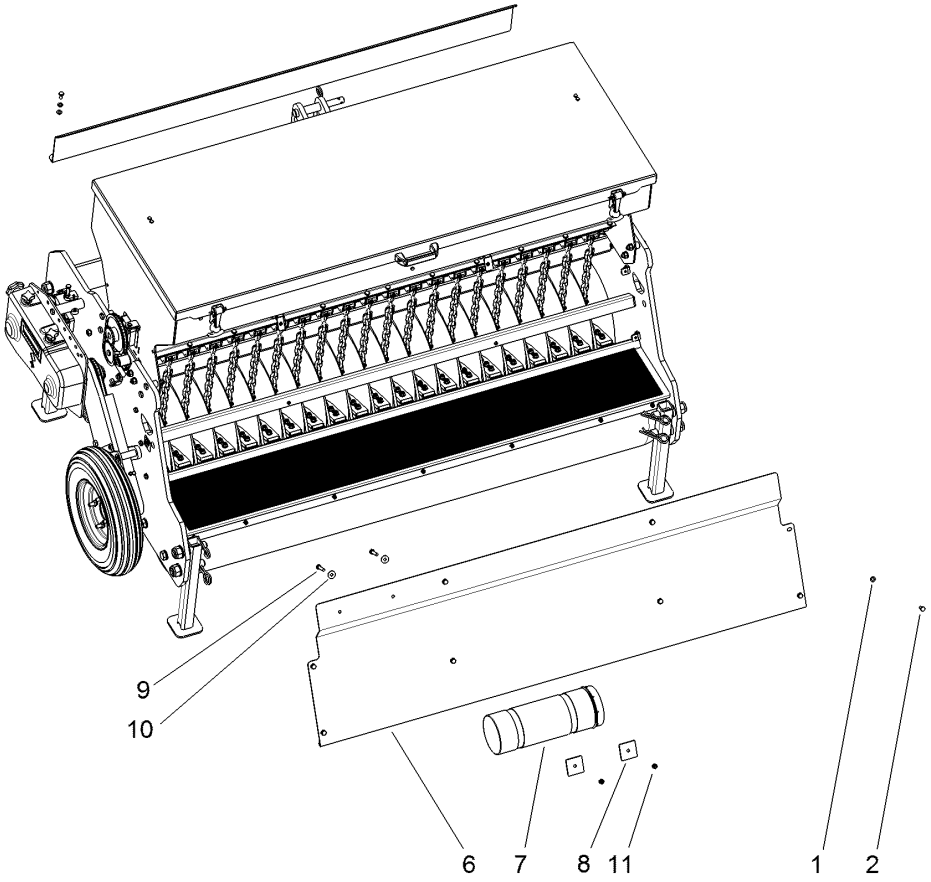

Cover and Toolbox Assembly (continued)

Ref.	Part Number	Qty.	Description
1	144-7929	13	Washer M8 - ISO 7089
2	144-7931	13	Bolt M8 X 16 - ISO 4017
3	144-7929	13	Washer M8 - ISO 7089
4	144-7930	5	Spring Washer M8 - Din 127
5	144-7827	1	Safety Cover Back As620
6	144-7828	1	Cover Back As620
7	144-8128	1	Toolbox Complete
8	144-8129	2	Toolbox Contraplate
9	144-8130	2	Bolt M8 X 35 - ISO 4017
10	144-8013	2	Washer-Large M8 - Din 9021
11	144-7944	2	Self Lock Nut M8 - ISO 10511

Drive Assembly

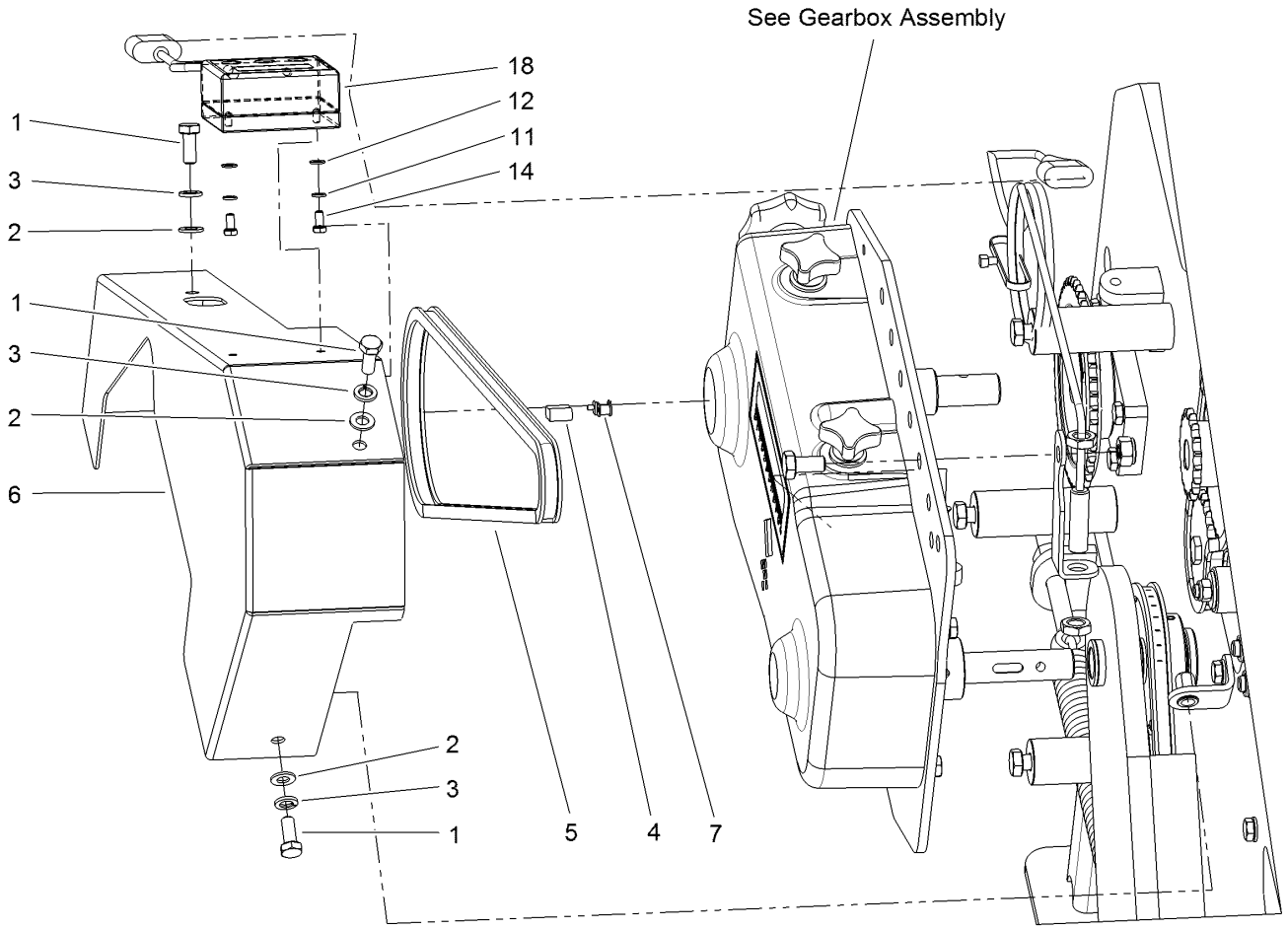

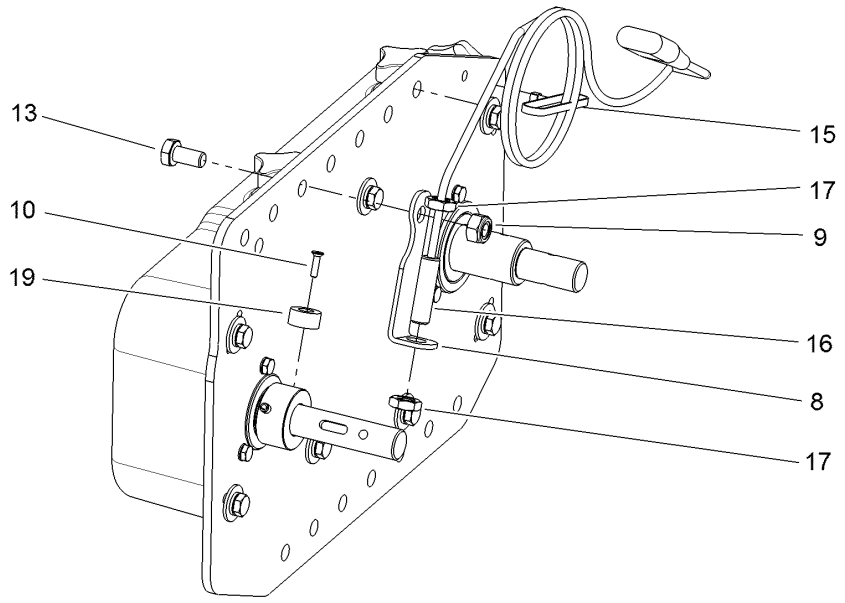

Drive Assembly (continued)

Ref.	Part Number	Qty.	Description
1	144-7945	3	Bolt M8 X 20 - ISO 4017
2	144-7929	3	Washer M8 - ISO 7089
3	144-7930	3	Spring Washer M8 - Din 127
4	144-8555	1	Chain Connector 3_8 Inch 6B
5	144-8556	1	Chain 3/8" Simplex L=1153
6	144-8557	1	Gear Cover
7	144-8558	1	Crank Link 3/8X7/32
8	144-8559	1	Sensor Bracket
9	144-7717	1	Nut, Self Locking - M 10
10	144-8560	1	Bolt M4 X 16 - Din 7991
11	144-8561	2	Spring Washer M5 - Din 127
12	144-8562	2	Washer M5 - ISO 7089
13	144-8109	1	Bolt M10 X 20 - ISO 4017
14	144-8563	2	Bolt M5 X 10 - ISO 4017
15	144-8564	1	Cable-Tie 4.8X200
16	144-8565	1	Magnetic Sensor D10 + Cable + Magnet
17	144-8250	2	Low Nut M12
18	144-8566	1	Counter UC300
19	144-8567	1	Magnet

Hopper Assembly

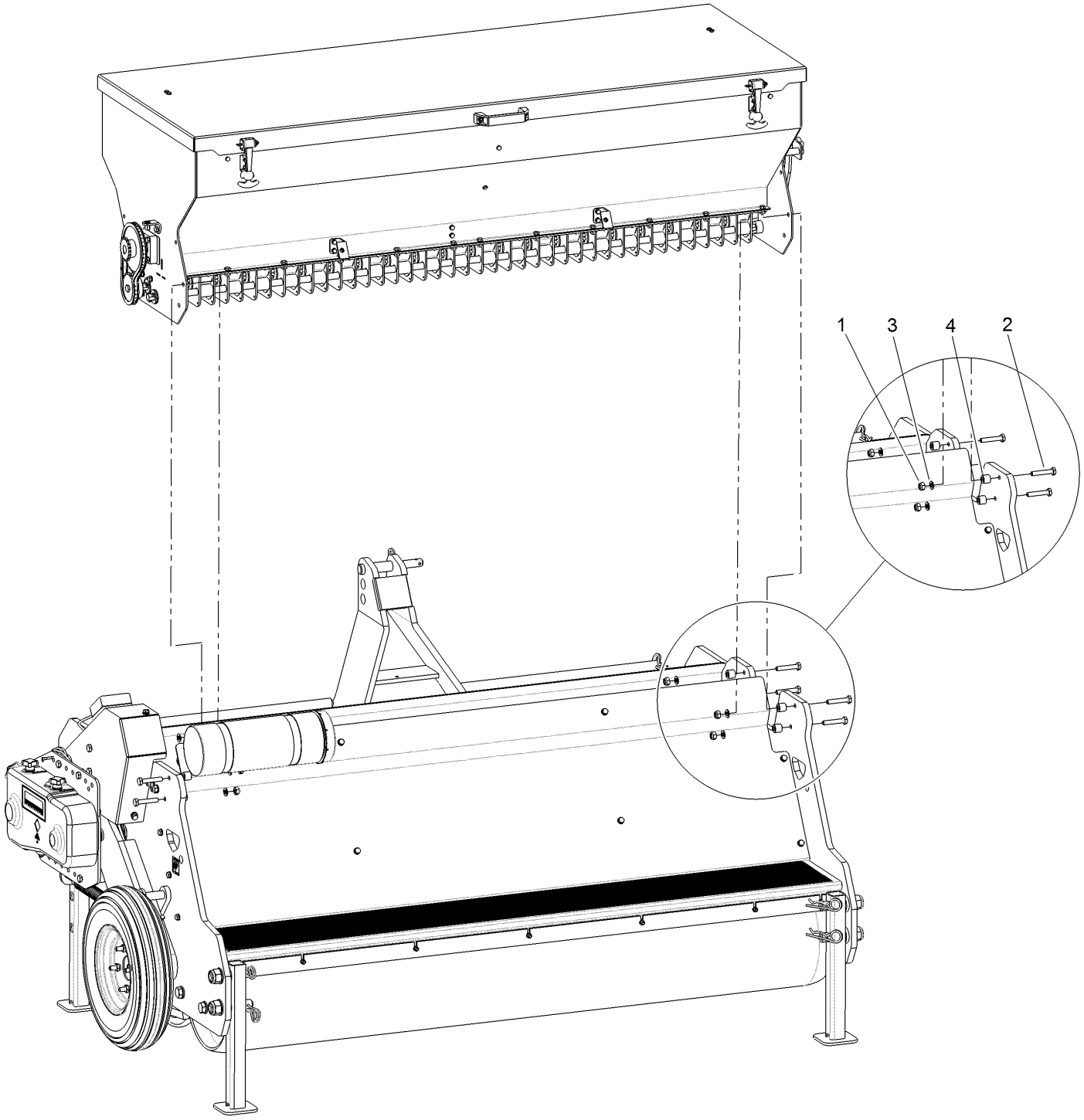

Hopper Assembly (continued)

Ref.	Part Number	Qty.	Description
1	144-7717	8	Nut, Self Locking - M 10
2	144-8568	8	Bolt M10 X 55 - ISO 4014
3	144-7939	8	Washer M10 - ISO 7089
4	144-8569	8	Distance Bushing

Hopper Components Assembly

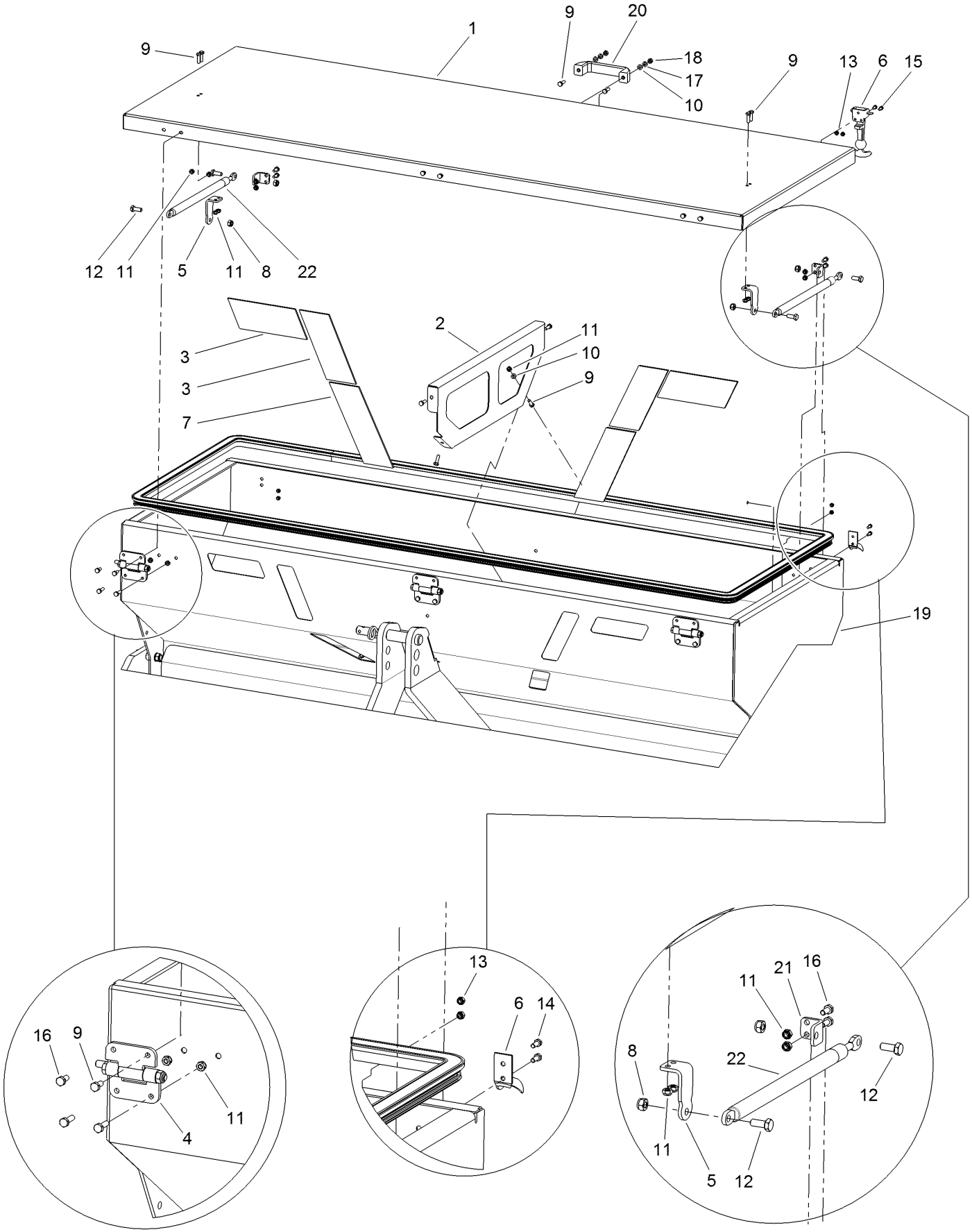

Hopper Components Assembly (continued)

Ref.	Part Number	Qty.	Description
1	144-8570	1	Top Cover Bullseye
2	144-8571	1	Hopper Support Bracket Bullseye
3	144-8572	4	Window Glass Seeder Bullseye
4	144-8573	3	Hinge
5	144-8574	2	Support L=65Mm
6	144-8373	2	Rubber Lock ASM
7	144-8575	2	Window Glass Seeder
8	144-7944	4	Self Lock Nut M8 - ISO 10511
9	144-8192	16	Bolt M6 X 20 - ISO 4017
10	144-8251	6	Washer M6 - ISO 7089
11	144-7940	24	Self Lock Nut M6 - ISO 10511
12	144-7945	4	Bolt M8 X 20 - ISO 4017
13	144-8378	8	Self Lock Nut M5 - ISO 10511
14	144-8379	4	Bolt M5 X 12 - ISO 4017
15	144-8563	4	Bolt M5 X 10 - ISO 4017
16	144-8576	10	Bolt M6 X 14 - ISO 4017
17	144-8158	2	Spring Washer M6 - Din 127
18	144-8485	2	Nut M6 - Din 934
19	144-7829	1	Hopper
20	144-7926	1	Handle
21	144-8577	2	Support L=30Mm
22	144-8578	2	Gas Strut L=585/Stroke=250, F=150N

Chain Drive Assembly

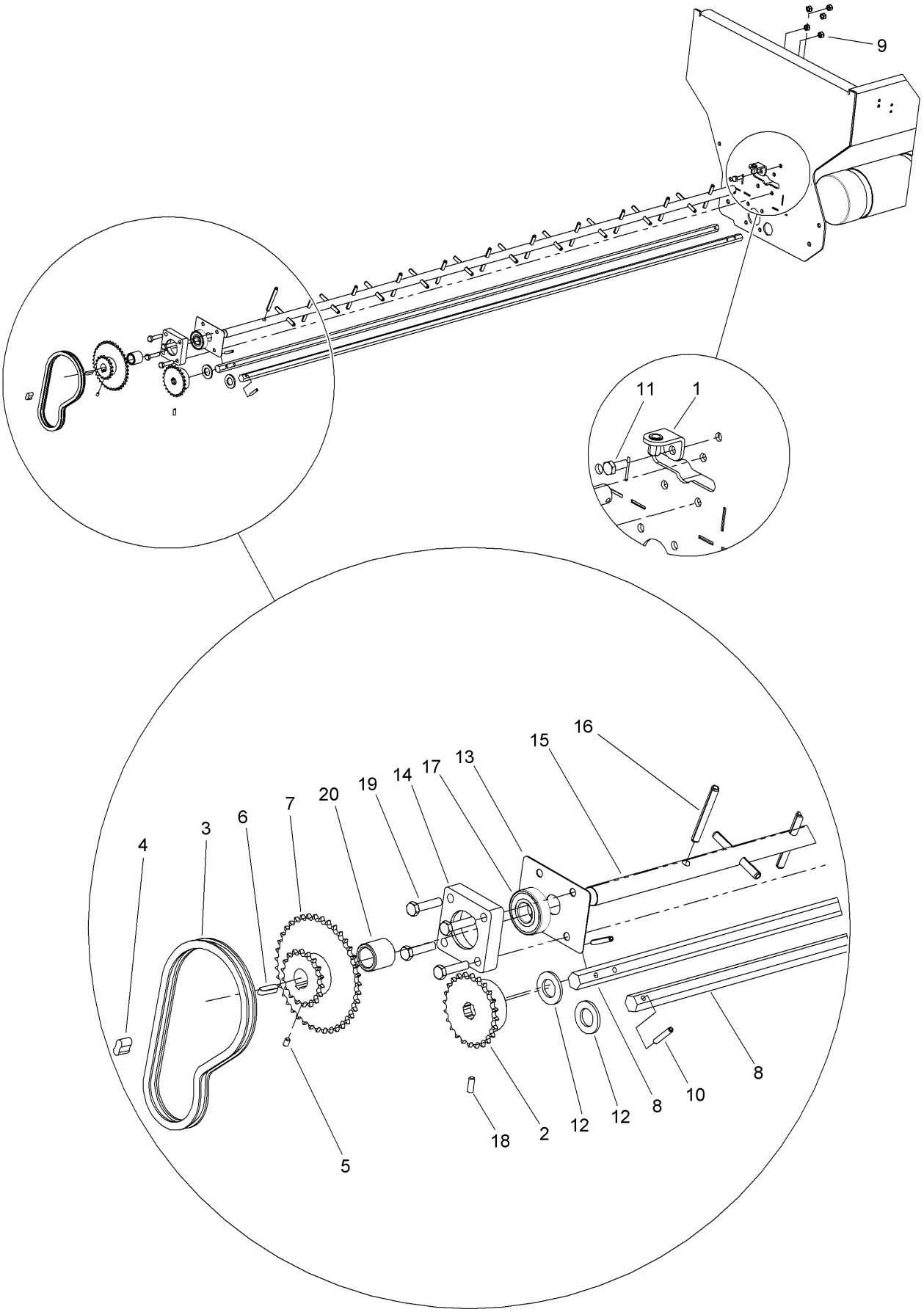

Chain Drive Assembly (continued)

Ref.	Part Number	Qty.	Description
1	144-8579	1	Bracket
2	144-8580	1	Sprocket 3/8"
3	144-8581	1	Chain 3/8X7/32", L=524
4	144-8555	1	Chain Connector 3_8 Inch 6B
5	144-8214	1	Set Screw M5 X 8 - Din 913
6	144-8213	1	Key 6X6X25 - Din 6885
7	144-8582	1	Weldment Sprocket
8	144-8583	2	Shaft
9	144-7944	5	Self Lock Nut M8 - ISO 10511
10	144-8584	2	Roll Pin Ø5X30
11	144-7945	1	Bolt M8 X 20 - ISO 4017
12	144-7982	3	Washer M18 - ISO 7089
13	144-8585	1	Cover Plate
14	144-8586	1	Bearing Block
15	144-8587	1	Agitator Shaft, Assembled
16	144-8588	21	Roll Pin 8 X 70 - ISO 8752
17	144-8589	1	Bearing 6204-C-2Hrs
18	144-8137	1	Set Screw M6 X 16 Din 913
19	144-8130	4	Bolt M8 X 35 - ISO 4017
20	144-8590	1	Distance Bushing

Seed Elements Assembly

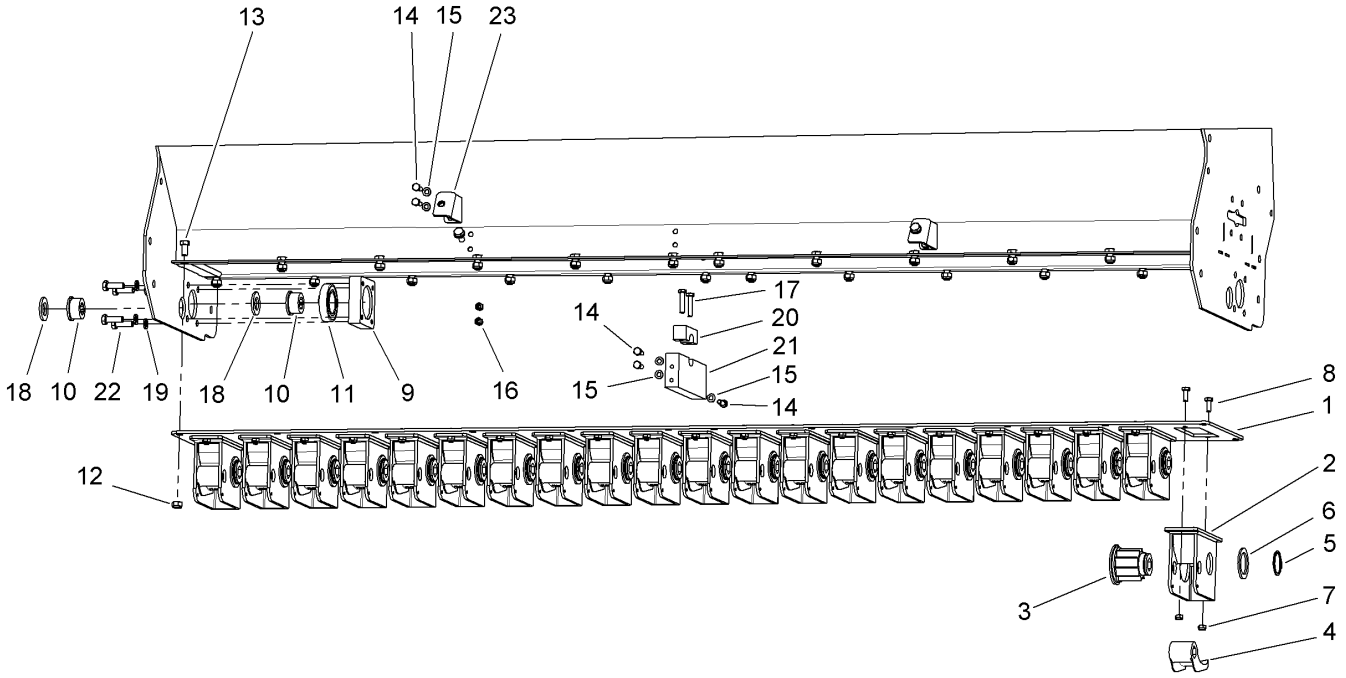

Seed Elements Assembly (continued)

Ref.	Part Number	Qty.	Description
1	144-8591	1	Plate
2	144-7725	21	Seed Element Casing
3	144-7726	21	Seed Element Rotor
4	144-7727	21	Seed Element Valve
5	144-7729	21	Circlip
6	144-7728	21	Washer
7	144-7940	42	Self Lock Nut M6 - ISO 10511
8	144-8159	42	Bolt M6 X 16 - ISO 4017
9	144-8592	2	Bearing Block
10	144-8593	2	Bushing
11	144-8147	2	Bearing 6006-Llu
12	144-7944	24	Self Lock Nut M8 - ISO 10511
13	144-7931	24	Bolt M8 X 16 - ISO 4017
14	144-8192	7	Bolt M6 X 20 - ISO 4017
15	144-8251	7	Washer M6 - ISO 7089
16	144-7940	46	Self Lock Nut M6 - ISO 10511
17	144-8194	2	Bolt M6 X 30 - ISO 4017
18	144-7982	2	Washer M18 - ISO 7089
19	144-7930	4	Spring Washer M8 - Din 127
20	144-8594	1	Guide Block Support
21	144-8595	1	Guide Lock Block
22	144-8014	4	Bolt M8 X 25 - ISO 4017
23	144-8596	2	Cover Support Bracket

Valve Adjustment Assembly

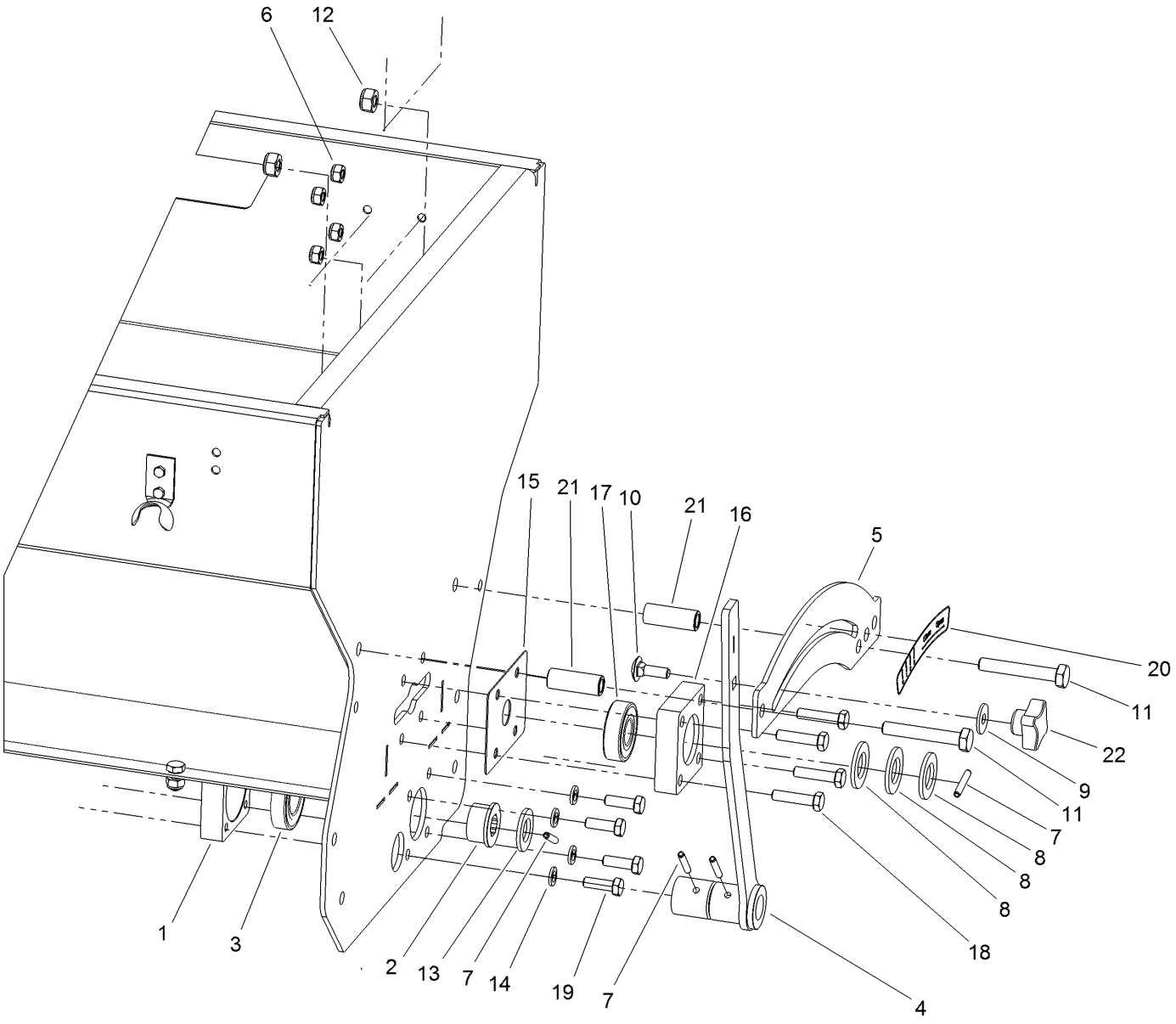

Valve Adjustment Assembly (continued)

Ref.	Part Number	Qty.	Description
1	144-8592	1	Bearing Block
2	144-8593	1	Bushing
3	144-8147	1	Bearing 6006-Llu
4	144-8597	1	Valve Adjustment
5	144-8598	1	Guide Strip
6	144-7944	5	Self Lock Nut M8 - ISO 10511
7	144-8584	4	Roll Pin Ø5X30
8	144-7991	3	Washer M20 - ISO 7089
9	144-8013	1	Washer-Large M8 - Din 9021
10	144-8360	1	Mh Bolt M8 X 25 ISO 8677
11	144-8599	2	Bolt M10 X 65 - ISO 4017
12	144-7717	2	Nut, Self Locking - M 10
13	144-7982	1	Washer M18 - ISO 7089
14	144-7930	4	Spring Washer M8 - Din 127
15	144-8585	1	Cover Plate
16	144-8586	1	Bearing Block
17	144-8589	1	Bearing 6204-C-2Hrs
18	144-8130	4	Bolt M8 X 35 - ISO 4017
19	144-8014	4	Bolt M8 X 25 - ISO 4017
20	144-8554	1	Decal Adjustment Valve
21	144-8600	2	Distance Bushing
22	144-8601	1	Closed Knob M8 - Din 6335

Frame and Rear Roller Assembly

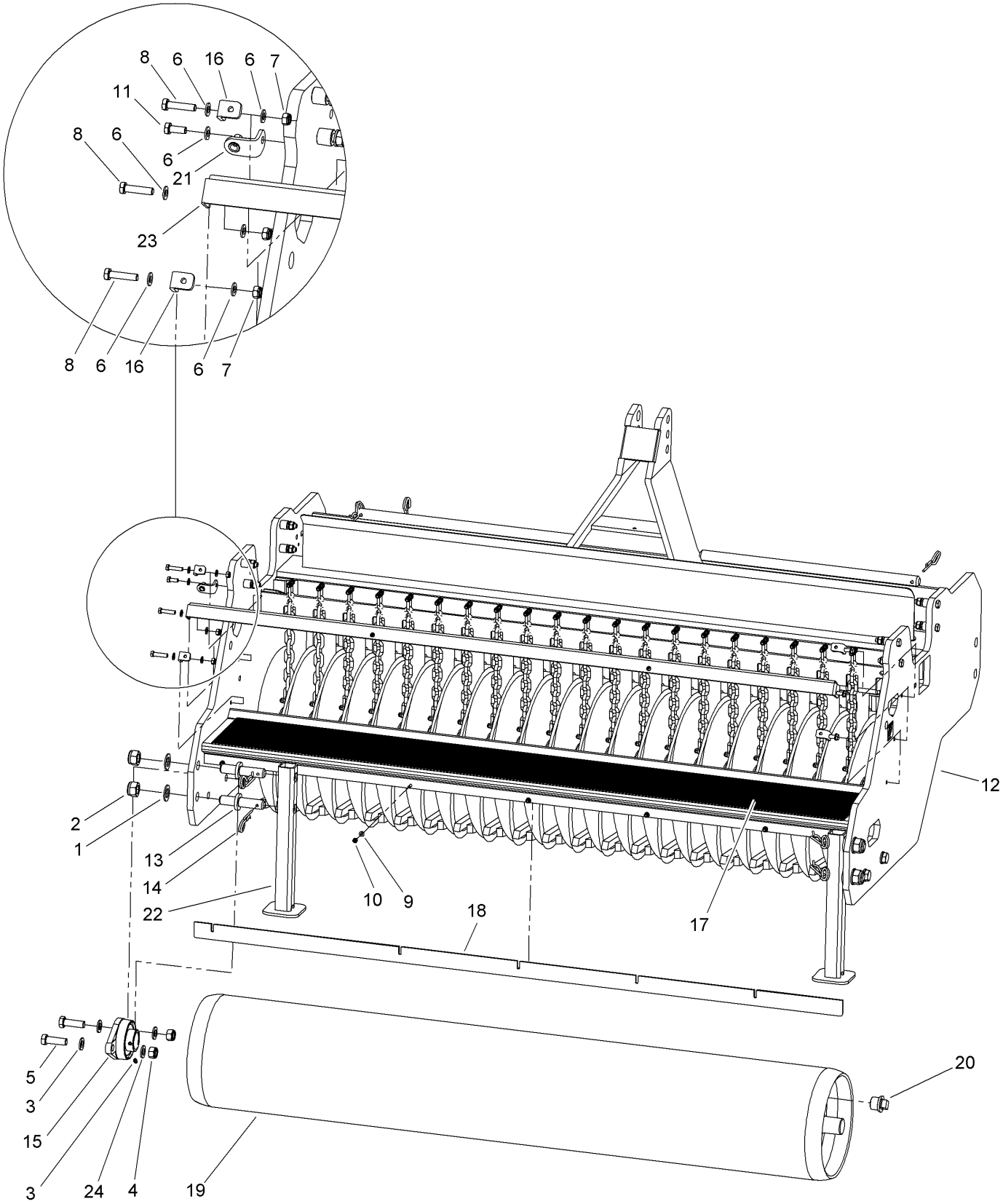

Frame and Rear Roller Assembly (continued)

Ref.	Part Number	Qty.	Description
1	144-8602	4	Washer M22 - ISO 7089
2	144-8475	4	Self Lock Nut M22 - ISO 10511
3	144-7956	8	Washer M16 - ISO 7089
4	144-7951	4	Nut, Self Lock M16 10.9 - ISO 10511
5	144-7989	4	Bolt M16 X 50 - ISO 4017
6	144-7929	14	Washer M8 - ISO 7089
7	144-7944	6	Self Lock Nut M8 - ISO 10511
8	144-8130	6	Bolt M8 X 35 - ISO 4017
9	144-8251	7	Washer M6 - ISO 7089
10	144-7940	7	Self Lock Nut M6 - ISO 10511
11	144-7945	1	Bolt M8 X 20 - ISO 4017
12	144-7830	1	Frame As620
13	144-8603	4	Pin-Jack
14	144-7710	4	R Clip
15	144-7724	2	Bearing Ucfl 208
16	144-8604	4	Cover Mounting Bracket
17	144-8605	1	Rubber Grip Plate
18	144-8606	1	Scraper Strip Rol As620
19	144-8607	1	Back Roller As620
20	144-8608	1	Plug M30X1.5
21	144-8579	1	Bracket
22	144-8609	2	Jack As620
23	144-8610	1	Cover Mounting Bracket
24	144-7961	2	Grease Nipple M6 Din 71412A

Funnel Beam and Jacks Assembly

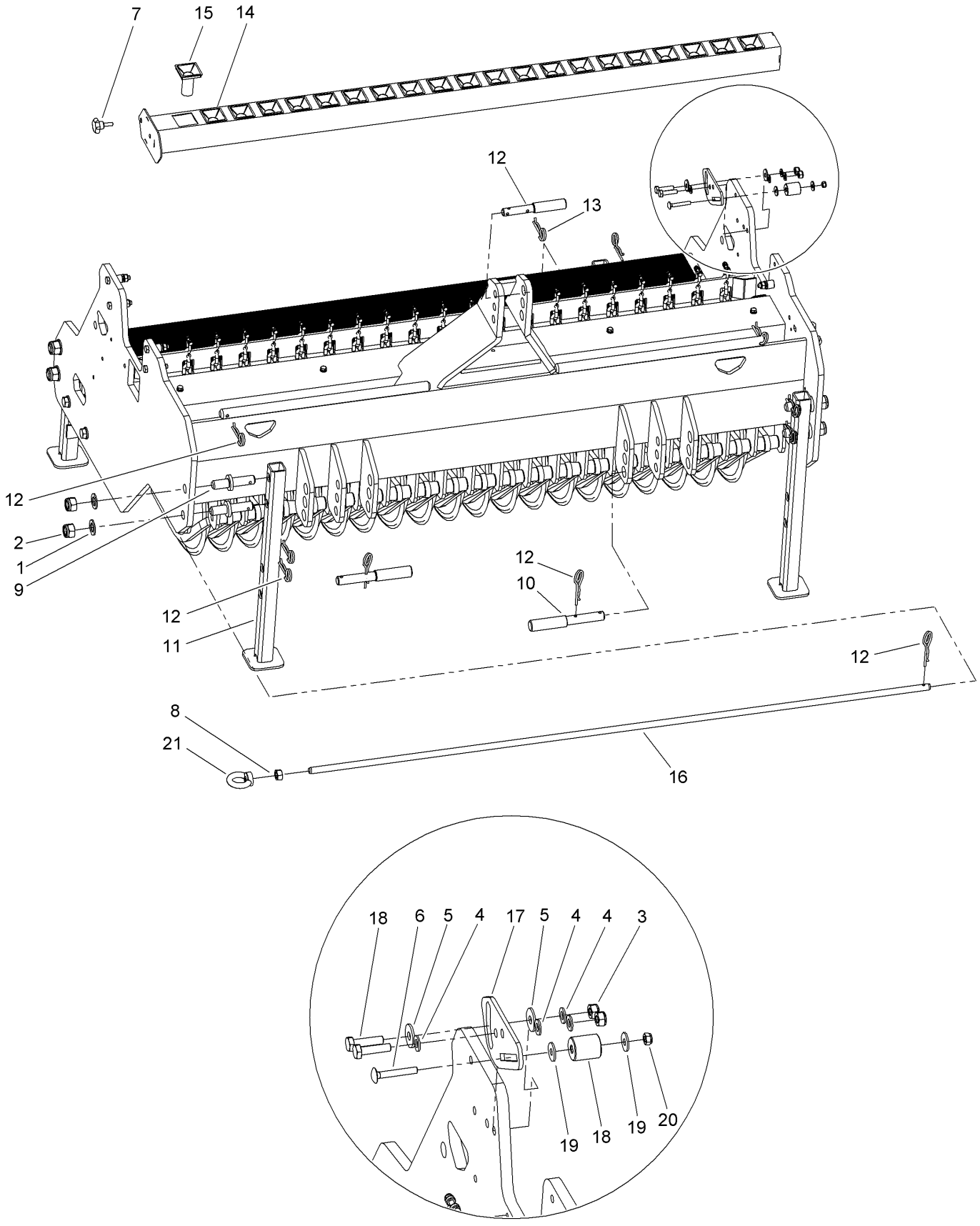

Funnel Beam and Jacks Assembly (continued)

Ref.	Part Number	Qty.	Description
1	144-8602	4	Washer M22 - ISO 7089
2	144-8475	4	Self Lock Nut M22 - ISO 10511
3	144-7717	2	Nut, Self Locking - M 10
4	144-7939	4	Washer M10 - ISO 7089
5	144-7946	2	Large Washer M10 - Din 9021
6	144-7942	2	Bolt M10 X 40 - ISO 4014 - 10.9
7	144-8611	1	Knurled Knob M8X40, L=25Mm
8	144-8012	1	Nut M16 - Din 934
9	144-8603	4	Pin-Jack
10	144-7709	2	Pin, Three Point
11	144-8612	2	Jack As620
12	144-7710	9	R Clip
13	144-7711	1	Toplink Pin
14	144-8613	1	Funnel Beam As620
15	144-8614	21	Funnel Dd As620
16	144-8615	1	Seed Element Shaft
17	144-8616	1	Spanner Plate
18	144-8617	1	Spanner Roll
19	144-8013	2	Washer-Large M8 - Din 9021
20	144-7944	1	Self Lock Nut M8 - ISO 10511
21	144-8618	1	Lifting Eye Nut M16 - Din 582

Disc Assembly

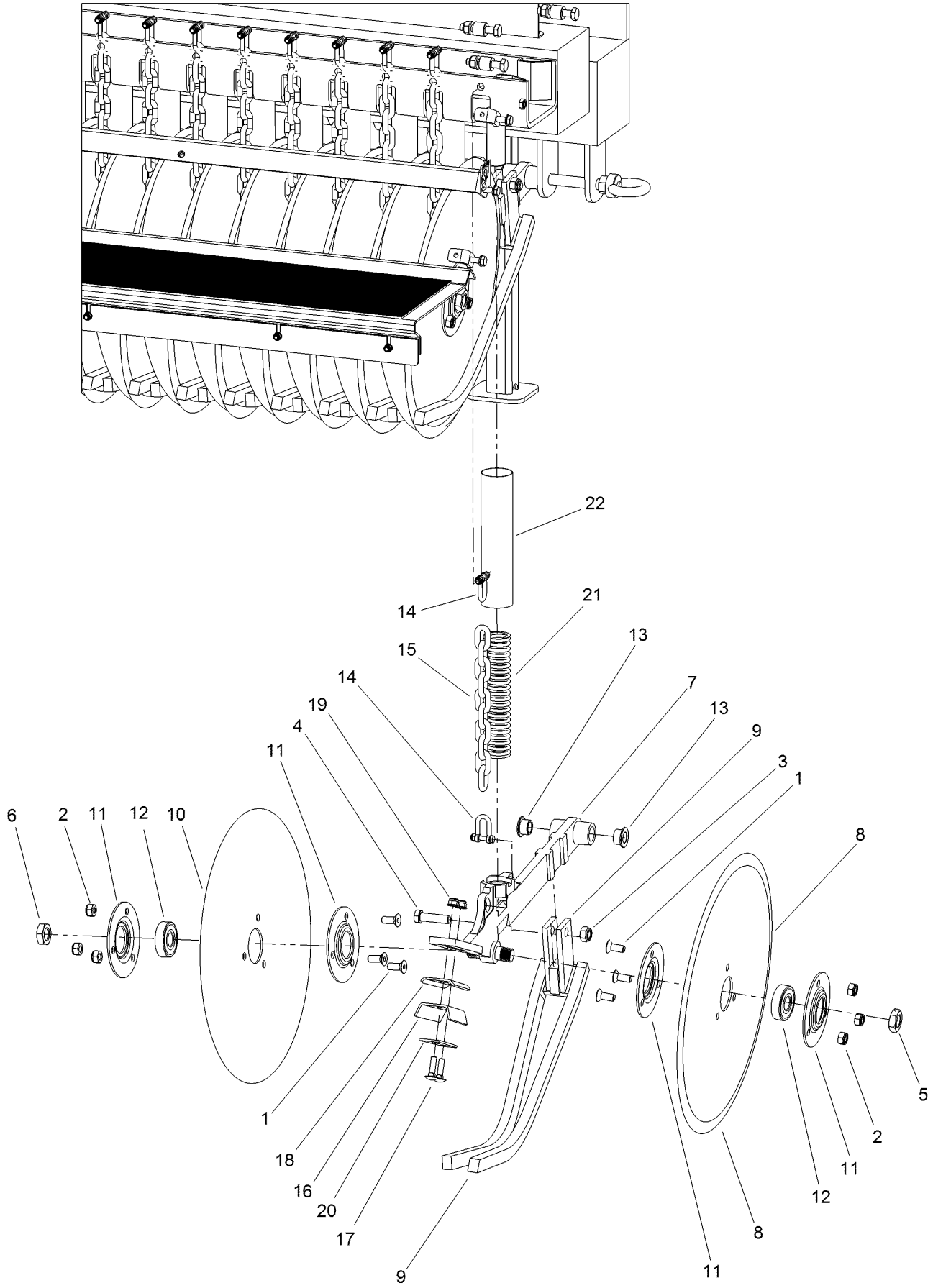

Disc Assembly (continued)

Ref.	Part Number	Qty.	Description
1	144-8203	126	Bolt M10 X 25 - Din 7991
2	144-7717	126	Nut, Self Locking - M 10
3	144-7705	21	Nut, Self Locking - M 12
4	144-7722	21	Bolt M 12X45
5	144-8619	21	Thin Nut M20 - ISO 4035
6	144-8620	21	Thin Nut M20L - ISO 4035
7	144-7723	21	Element, As620 Casting
8	144-7714	21	Disc
9	144-7721	21	Guide, Cutting Depth
10	144-7713	21	Disc
11	144-7716	84	Center Plate
12	144-7715	42	Bearing 6304 Llu
13	144-8621	42	Bearing Bushing
14	144-8622	42	D-Shackle D=6Mm
15	144-8623	21	Chain Seeding Element 10-Links
16	144-8624	21	Rubber Scraper
17	144-8625	42	Mh Bolt M8 X 30 ISO 8677
18	144-8626	21	Scraper Strip
19	144-8434	42	Self Lock Nut Flanged M8 - Din 6926
20	144-8627	21	Scraper Support Plate
21	144-7719	21	Spring As620
22	144-7720	21	Spring Hose

Wheel Drive Assembly

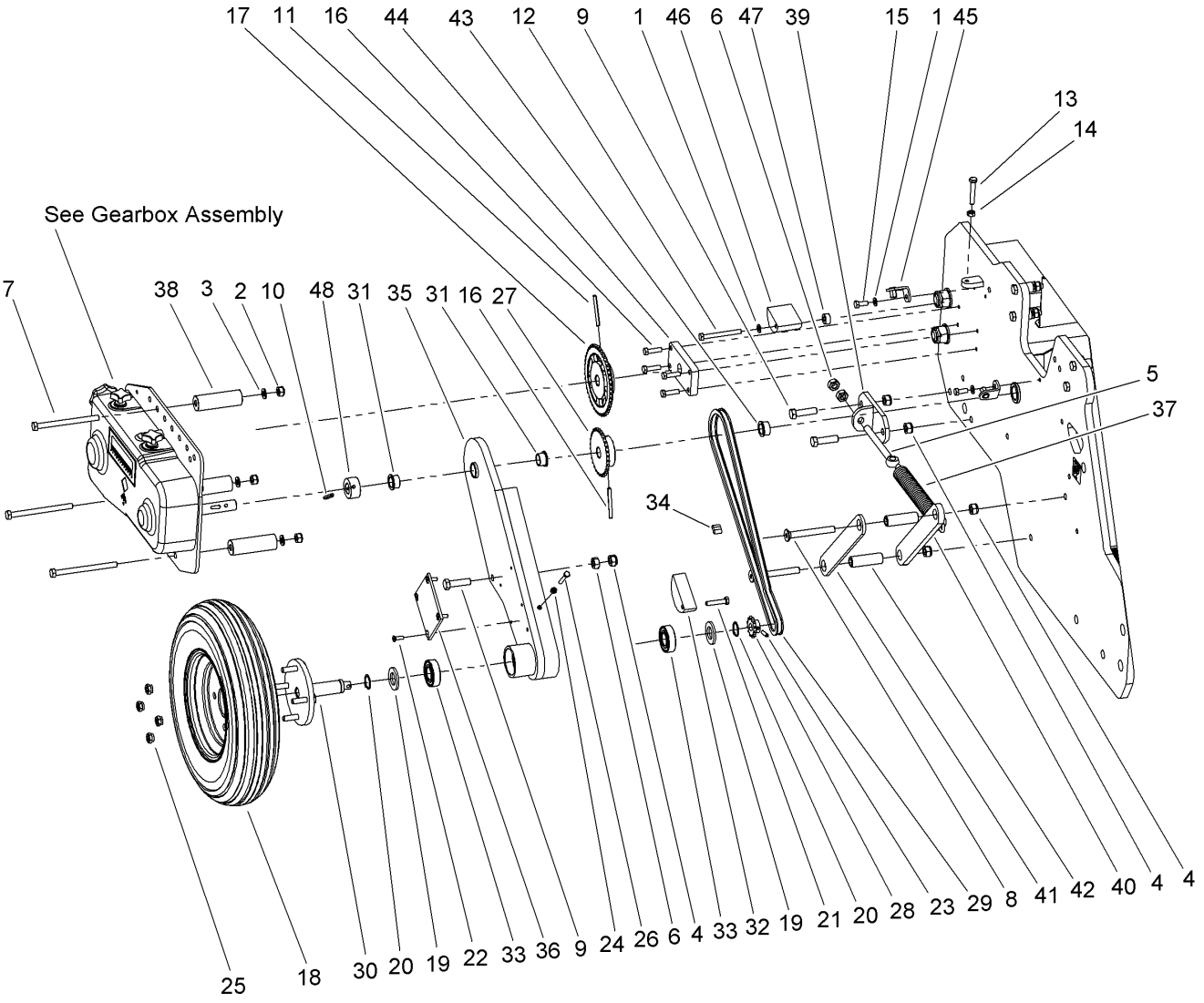

Wheel Drive Assembly (continued)

Ref.	Part Number	Qty.	Description
1	144-7929	3	Washer M8 - ISO 7089
2	144-7717	3	Nut, Self Locking - M 10
3	144-7939	3	Washer M10 - ISO 7089
4	144-7705	5	Nut, Self Locking - M 12
5	144-8628	1	Eye Bolt M12X140
6	144-8245	2	Nut M12 - Din 934
7	144-8629	3	Bolt M10 X 130 - ISO 4014
8	144-8630	2	Csk Screw M12 X 100 - Din 7991
9	144-7722	2	Bolt M 12X45
10	144-8631	1	Roll Pin 6 X 45 - ISO 8752
11	144-7949	4	Bolt M8 X 30 - ISO 4017
12	144-8269	1	Bolt M8 X 80 - ISO 4014
13	144-8632	1	Bolt M8 X 50 - ISO 4017
14	144-8273	1	Nut M8 - Din 934
15	144-7945	2	Bolt M8 X 20 - ISO 4017
16	144-8633	2	Roll Pin 6 X 60 - ISO 8752
17	144-8634	1	Chainwheel 1Ste Gearaxle
18	144-8635	1	Wheel Complete 4.00-8/4Pr
19	144-8365	2	Washer M24 - ISO 7089
20	144-8636	2	Circlip D=25 - Din 471
21	144-8063	1	Bolt M8 X 40 - ISO 4014
22	144-8637	4	Bolt M6 X 20 - Din 7991
23	144-8391	1	Roll Pin 6 X 26 - ISO 8752
24	144-8485	1	Nut M6 - Din 934
25	144-8638	4	Wheel Nut M10X1.25
26	144-8464	1	Bolt M6 X 45 - ISO 4017
27	144-8639	1	Chain Wheel 30Z 06B-1
28	144-8640	1	Chain Wheel 06B 12Z
29	144-8641	1	Chain 3/8" Simplex L=1038
30	144-8642	1	Wheel Hub
31	144-8643	2	Bearing Bushing Swingarm
32	144-8644	1	Chain Tensioner
33	144-8645	2	Bearing 6205-Llu
34	144-8555	1	Chain Connector 3_8 Inch 6B
35	144-7831	1	Frame Swingarm
36	144-8646	1	Guide Plate Swingarm
37	144-8647	1	Spring Wheelaxle
38	144-8648	3	Spacer
39	144-8649	1	Bracket Spring Tensioner
40	144-8650	1	Guide Swing Arm
41	144-7832	1	Guide Swing Arm
42	144-8651	2	Distance Bushing Ø20/Ø12.5 L=65
43	144-8652	1	Bearing Bushing Gearaxle
44	144-8653	1	Bearing Plate
45	144-8579	2	Bracket
46	144-8654	1	Chain Tensioner
47	144-8655	1	Distance Bushing
48	144-8656	1	Magnet Bushing

Weights Assembly

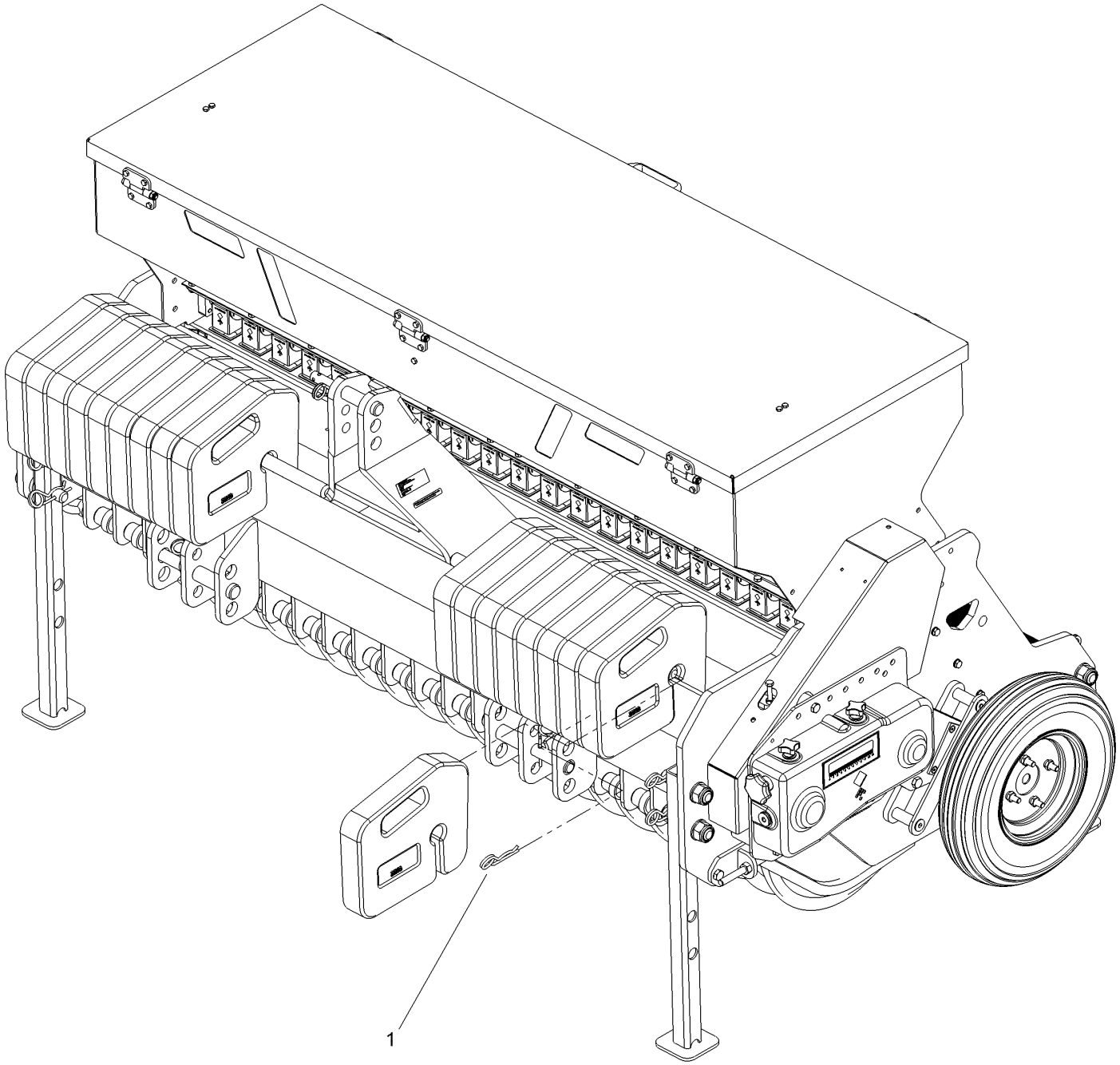

Weights Assembly (continued)

Ref.	*Part Number*	*Qty.*	*Description*
1	144-7710	2	R Clip

Gearbox Assembly

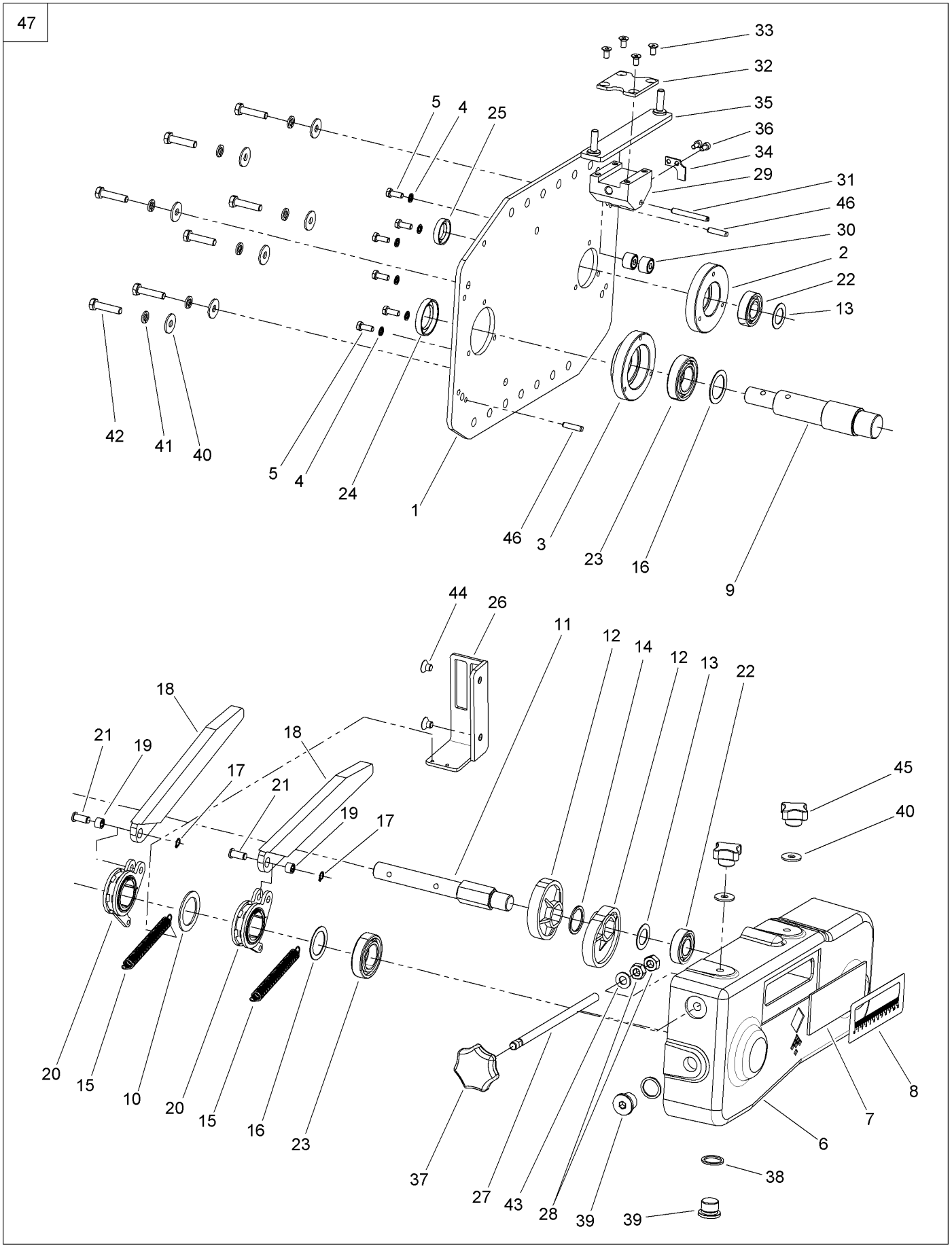

Gearbox Assembly (continued)

Ref.	Part Number	Qty.	Description
1	144-8659	1	Lid Plate
2	144-8660	1	Bearing Hub Ø42
3	144-8661	1	Bearing Hub Ø55
4	144-8662	6	Bonded Seal Ring M6
5	144-8159	6	Bolt M6 X 16 - ISO 4017
6	144-8663	1	Casted Gearbox Housing
7	144-8664	1	Window
8	144-8665	1	Gauge Decal
9	144-8666	1	Shaft
10	144-8667	1	Washer
11	144-8668	1	Shaft
12	144-8669	2	Eccentric
13	144-8670	2	Shim Ø20Xø32X1.0 Din988
14	144-8671	1	Spacer
15	144-8672	2	Spring
16	144-8673	2	Shim Ø30Xø42X1.0 Din988
17	144-8674	2	Circlip D=8 - Din 471
18	144-8675	2	Rocker Strip
19	144-8676	2	Bearing Hk0808
20	144-8677	2	Rocker Arm Assembly
21	144-8678	2	Pin
22	144-8679	2	Bearing 6004
23	144-8680	2	Bearing 6006
24	144-8681	1	Oil Seal 30-45-8
25	144-8682	1	Oil Seal 20-32-7
26	144-8683	1	Guide
27	144-8684	1	Threaded Rod M10X210
28	144-8139	2	Nut M10 - Din 934
29	144-8685	1	Slider Block
30	144-8686	2	Roller Bearing
31	144-8687	1	Roll Pin 6 X 50 - ISO 8752
32	144-8688	1	Lock Plate
33	144-8689	4	Bolt M6 X 12 - Din 7991
34	144-8690	1	Indicator
35	144-8691	1	Slider Bracket
36	144-8692	2	M5 X 10 — 10C
37	144-8693	1	Knob M10 With Set Screw
38	144-8074	2	Copper Washer 1_2
39	144-8694	2	Blind Plug G1/2
40	144-8013	9	Washer-Large M8 - Din 9021
41	144-7930	7	Spring Washer M8 - Din 127
42	144-8130	7	Bolt M8 X 35 - ISO 4017
43	144-7939	1	Washer M10 - ISO 7089
44	144-8695	2	Bolt M8 X 10 - Din 7991
45	144-8601	2	Closed Knob M8 - Din 6335
46	144-8696	2	Parallel Pin ISO 8734 - 6 X 26
47	144-8657	1	Casted Seeder Gearbox

Attachments and Accessories

For 46430 AccuraSeed 620

Product Name	Model/Part
Wheel Kit	46431
44lb Weight, AccuraSeed 620 or RapidSeed 430 and 590	46432

Notes:

Notes:

Notes:


BULLS•EYE™