FORM NO. 3325–593

TORO®

Model No. 33145–200000001 & Up
Model No. 33155–200000001 & Up
Model No. 33165–200000001 & Up

PARTS CATALOG

Reelmaster Universal Frame (3–5 & 7 Unit)

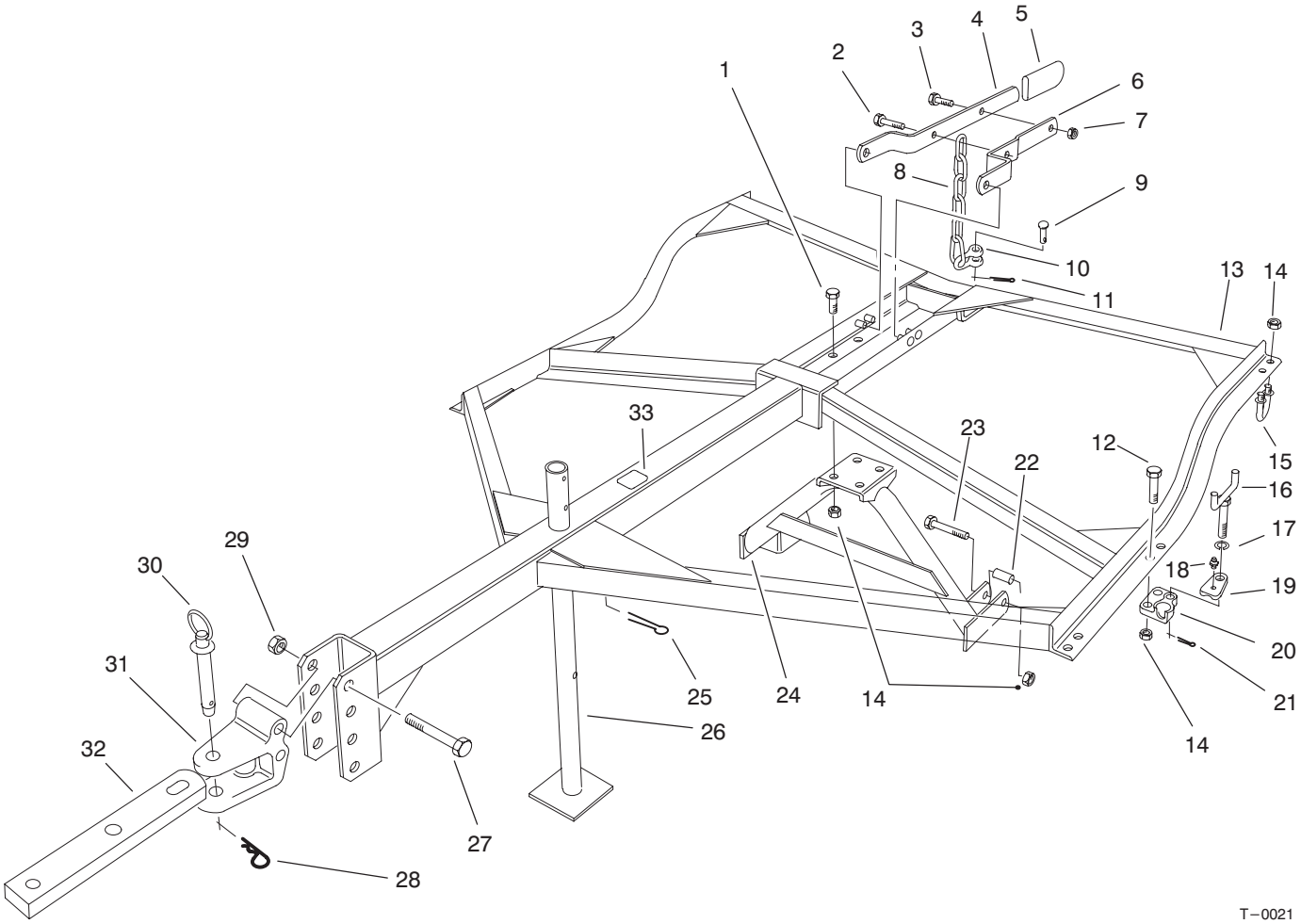

Center Frame Assembly (3–5–7 Unit)

Ref. No.	Part No.	Description	No. Used
1	325–5	Screw–HH	4
2	323–7	Screw–HH	1
3	323–6	Screw–HH	1
4	53–5250–01	Handle–Lift (Long)	1
5	62–9130	Grip–Handle	1
6	53–5260–01	Handle–Lift (Short)	1
7	32153–2	Nut–Lock	2
8	5–4693	Chain–Lift	1
9	283–10	Pin–Clevis	1
10	282–13	Shackle	1
11	3272–10	Pin–Cotter	1
†12	325–5	Screw–HH	8
13	53–5100–01	Asm–Center Frame	1
14	32153–5	Nut–Lock	18
15	12–0010	U–Bolt	2
†16	5–1108	Bolt–Hinge Clamp	4
†17	3253–7	Washer–Lock	4
†18	302–5	Fitting–Grease	4

Ref. No.	Part No.	Description	No. Used
†19	5–1107–01	Cap–Hinge	4
†20	5–1103–01	Socket–Hinge LH	2
†*	5–1104–01	Socket–Hinge RH	2
†21	3272–6	Pin–Cotter	4
22	5–1091	Spacer	2
23	325–10	Screw–HH	2
24	53–4910–01	Drawbar Assembly	1
25	3272–38	Pin–Cotter	1
26	53–5230–01	Support–Frame	1
27	327–23	Screw–HH	2
28	3290–343	Pin–Cotter, Hair	1
29	3296–24	Nut–Lock	2
30	13–6200	Pin–Hitch (Incl. Ref. #28)	1
31	47–3550–01	Clevis–Hitch	1
32	53–4970–01	Extension–Tractor	1
33	93–7252	Decal–CE (Europe) (Only on: Model 33145)	1

*Not Illustrated
†Used with 5 & 7 unit models only.

© The TORO Company 2000
All Rights Reserved

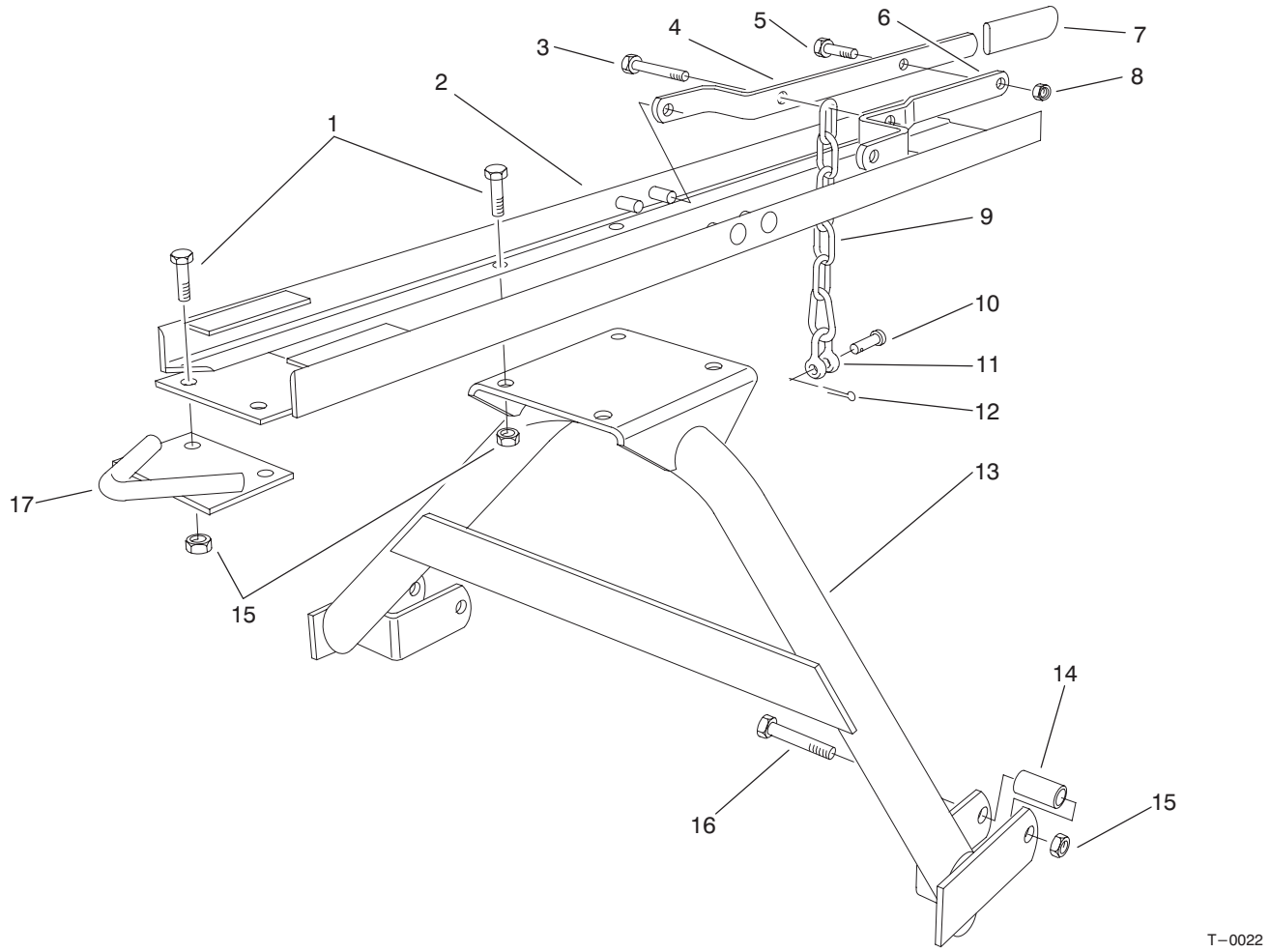

Trailing Unit Frame Assembly

Ref. No.	Part No.	Description	No. Used
1	325−5	Screw−HH	6
2	53−5010−01	Asm−Frame	1
3	323−7	Screw−HH	1
4	53−5250−01	Handle−Lift (Long)	1
5	323−6	Screw−HH	1
6	53−5260−01	Handle−Lift (Short)	1
7	62−9130	Grip−Handle	1
8	32153−2	Nut−Lock	2
9	5−4693	Chain−Lift	1

Ref. No.	Part No.	Description	No. Used
10	283−10	Pin−Clevis	1
11	282−13	Shackle	1
12	3272−10	Pin−Cotter	1
13	53−4910−01	Asm−Drawbar	1
14	5−1091	Spacer	2
15	32153−5	Nut−Lock	8
16	325−10	Screw−HH	2
17	53−4870−01	Hitch	1

Note: Quantities listed are for One Trailing Unit Assembly.

Ref. page 8, Reelmaster Universal Frame Layout.

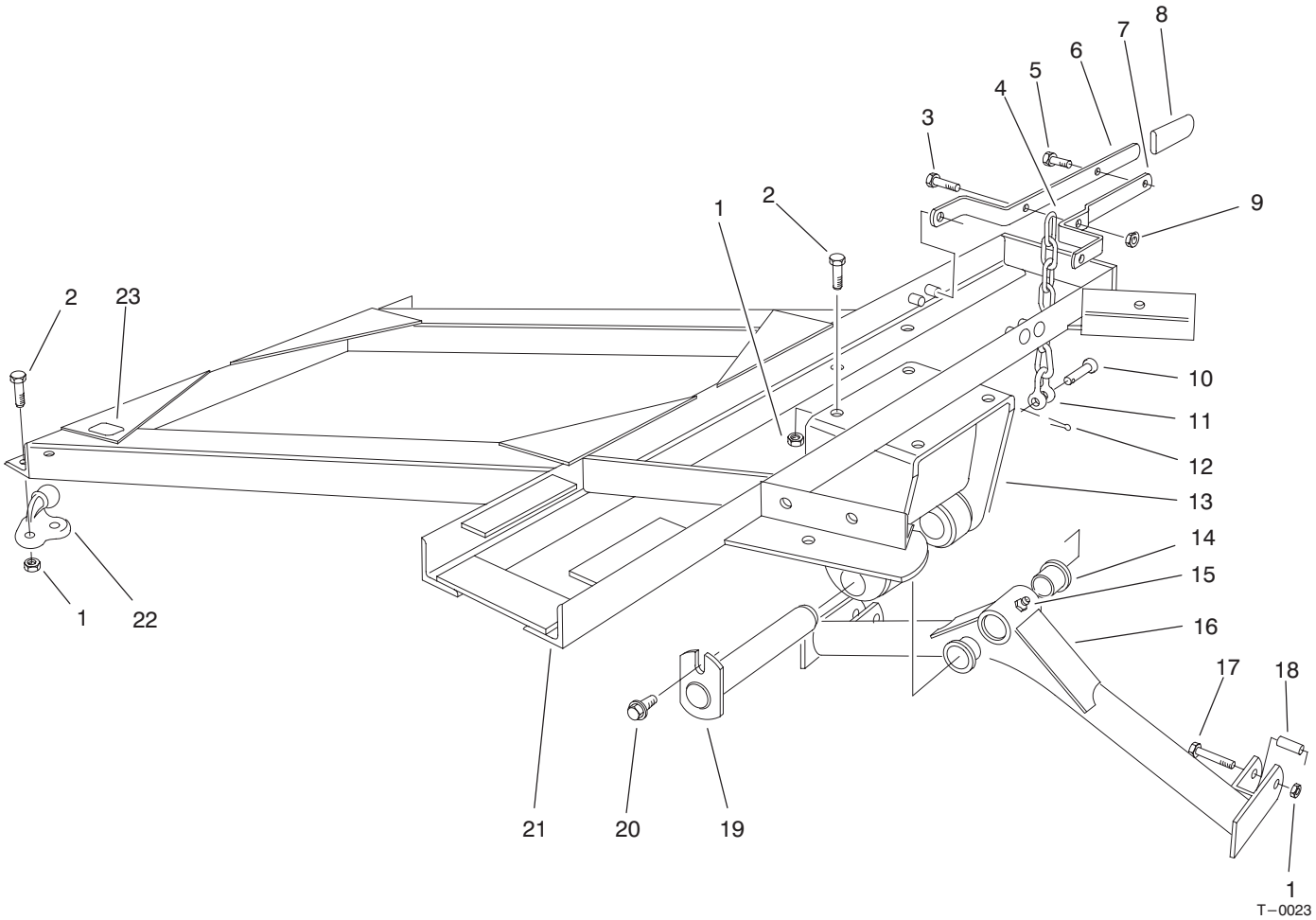

Wing Unit Frame Assembly

Ref. No.	Part No.	Description	No. Used
1	32153−5	Nut−Lock	10
2	325−5	Screw−HH	8
3	323−7	Screw−HH	1
4	5−4693	Chain−Lift	1
5	323−6	Screw−HH	1
6	53−5250−01	Handle−Lift (Long)	1
7	53−5260−01	Handle−Lift (Short)	1
8	62−9130	Grip−Handle	1
9	32153−2	Nut−Lock	2
10	283−10	Pin−Clevis	1
11	282−13	Shackle	1
12	3272−10	Pin−Cotter	1
13	53−5300−01	Asm−Drawbar Pivot	1

Ref. No.	Part No.	Description	No. Used
14	5−1111	Bushing	2
15	302−5	Fitting−Grease	1
16	54−4130−01	Asm−Drawbar	1
17	325−10	Screw−HH	2
18	5−1091	Spacer	2
19	54−4110−01	Pin−Pivot	1
20	32144−41	Screw−TAP	1
21	53−5000−01	Asm−Frame LH	1
*	53−5200−01	Asm−Frame RH	1
22	5−1105−01	Ball−Hinge LH	2
*	5−1106−01	Ball−Hinge RH	2
23	93−7252	Decal−CE (Europe) (Only on: Model 33155)	1

* Not Illustrated
Note: Quantities listed are for One Wing Unit Assembly.
Ref. page 8, Reelmaster Universal Frame Layout.

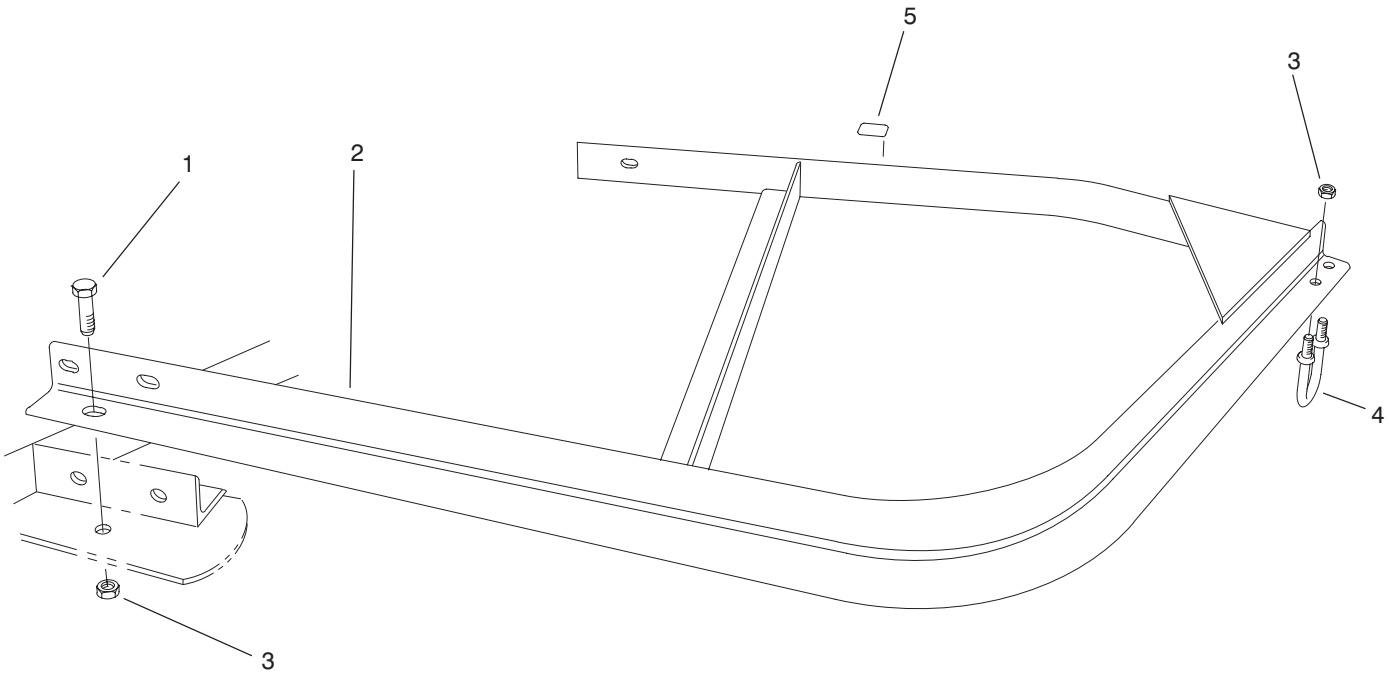

T−0024

Wing Extension Frame Assembly

Ref. No.	Part No.	Description	No. Used
1	325−4	Screw−HH	6
2	54−4190−01	Frame−Wing Extension LH	1
*	54−4200−01	Frame−Wing Extension RH	1
3	32153−5	Nut−Lock	8

Ref. No.	Part No.	Description	No. Used
4	12−0010	U−Bolt	1
5	93−7252	Decal−CE (Europe) (Only On: Model 33165)	1

* Not Illustrated
Note: Quantities listed are for One Wing Extension Assembly.
Ref. page 8, Reelmaster Universal Frame Layout.

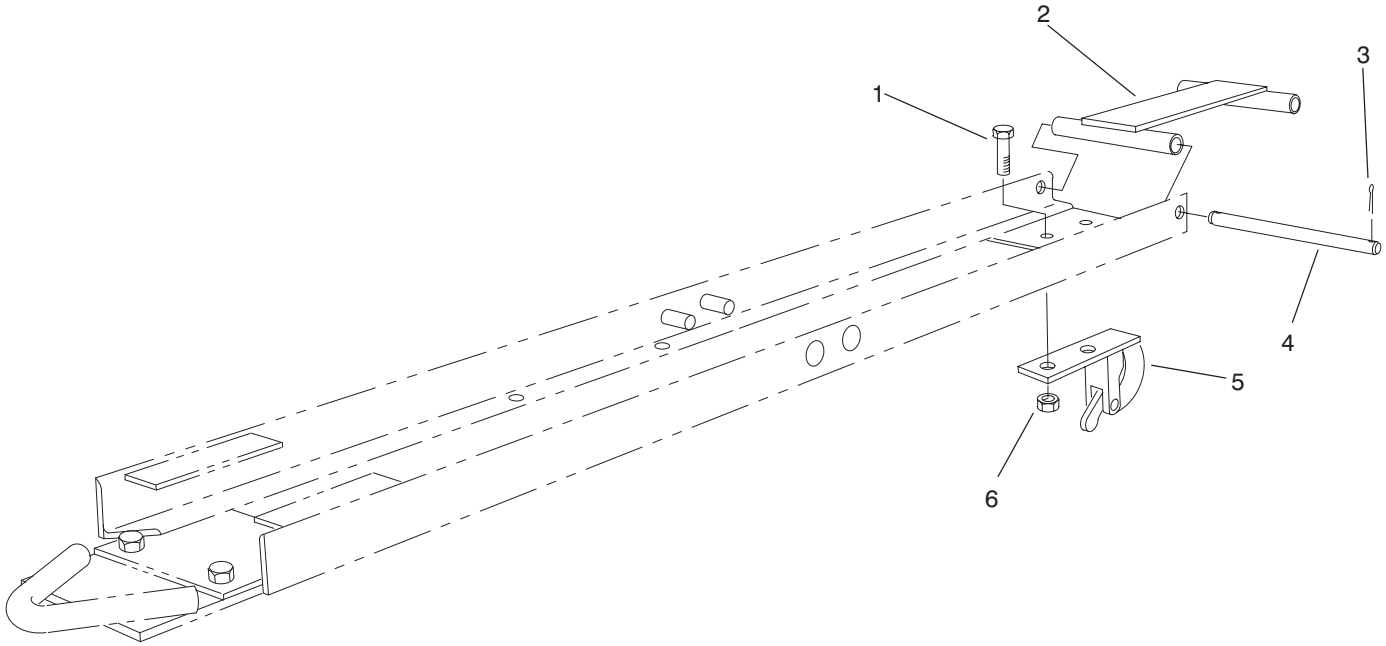

T−0025

Trailing Unit Trailing Kit (Optional)

Ref. No.	Part No.	Description	No. Used
1	325−5	Screw−HH	2
2	5−1117	Bar−Trailing	1
3	3272−11	Pin−Cotter	4
4	5−1118	Pin−Hinge	2
5	5−1097	Hook−Snap	1
6	32153−5	Nut−Lock	2

Note: Quantities listed are for One Kit.
Ref. page 8, Trailing Kit Application Guide.

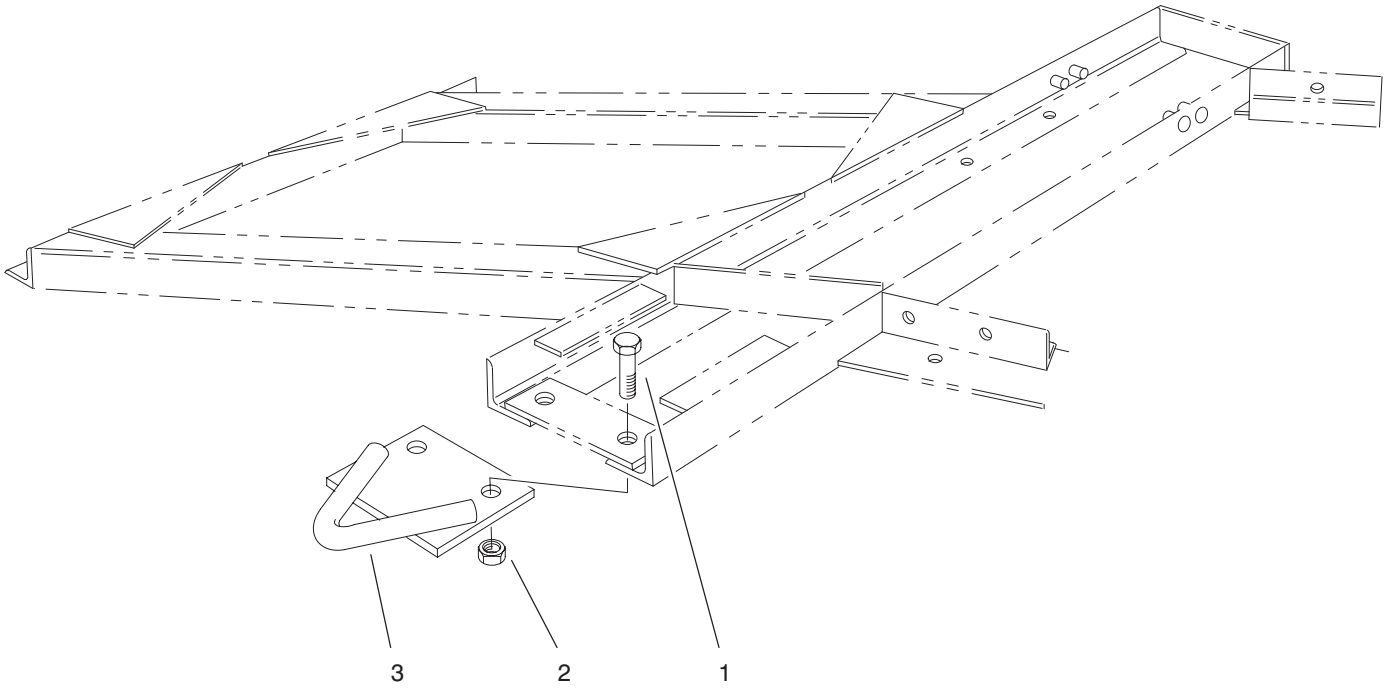

T−0026

Wing Unit Trailing Kit (Optional)

Ref. No.	Part No.	Description	No. Used
1	325−5	Screw−HH	2
2	32153−5	Nut−Lock	2

Ref. No.	Part No.	Description	No. Used
3	53−4870	Hitch−Trailing	1

Note: Quantities listed are for One Kit.

Ref. page 8, Trailing Kit Application Guide

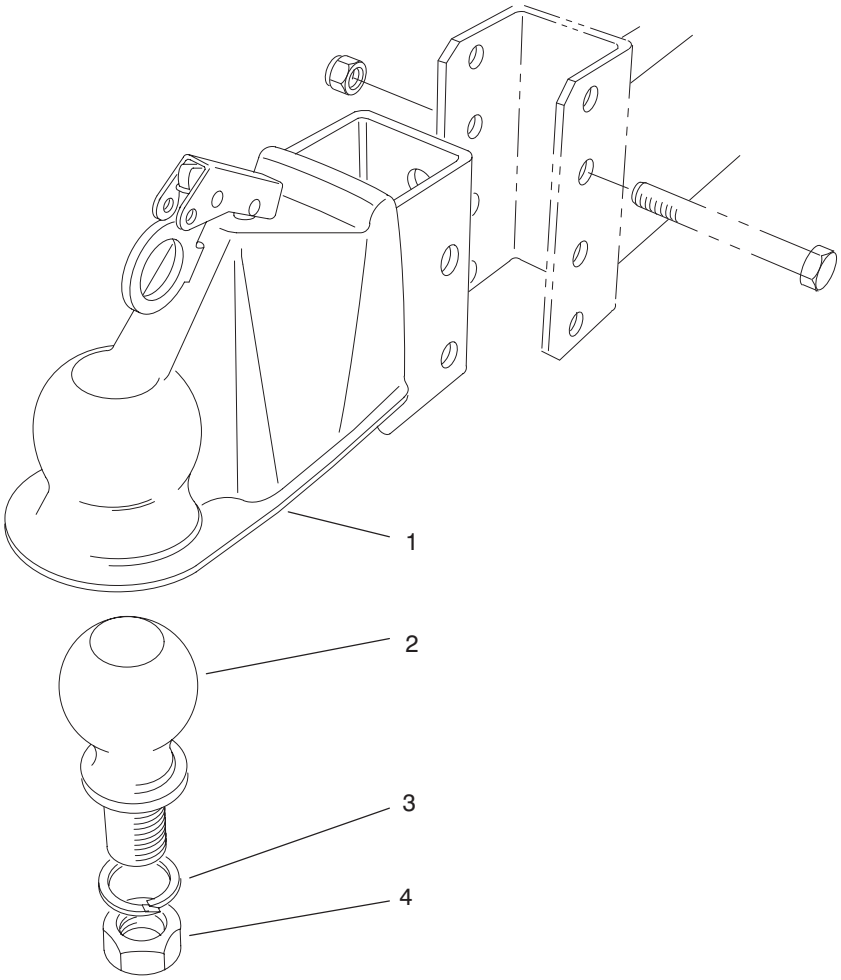

T–0027

Ball Coupler Kit No. 53–9760 (Optional)

Ref. No.	Part No.	Description	No. Used
1	53–9780	Asm–Coupler, Ball	1
2	53–9770	Ball–Coupling (Incl. Ref. # 3 & 4)	1

Ref. No.	Part No.	Description	No. Used
☆3		Washer–Lock	1
☆4		Nut–Full	1

☆ Not Serviced

Table of Contents

Description	Page
Center Frame Assembly (3–5 & 7 Unit)	1
Trailing Unit Frame Assembly	2
Wing Unit Frame Assembly	3
Wing Extension Frame Assembly	4
Trailing Unit Trailing Kit (Optional)	5
Wing Unit Trailing Kit (Optional)	6
Ball Coupler Kit No. 53–9760 (Optional)	7
Trailing Kit Application Guide	8

Trailing Kit Application Guide

3 UNIT UNIVERSAL FRAME TRAILING KITS REQ'D.
No Additional Kits Needed

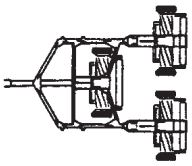

7 UNIT UNIVERSAL FRAME TRAILING KITS REQ'D.
4–Trailing Unit Trailing Kits 2–Wing Unit Trailing Kits

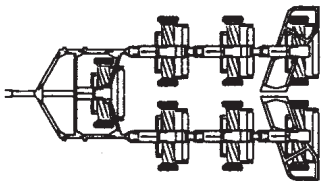

5 UNIT UNIVERSAL FRAME TRAILING KITS REQ'D.
2–Trailing Unit Trailing Kits 2–Wing Unit Trailing Kits

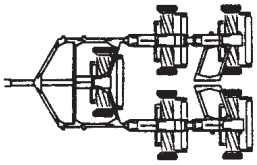

T–2816

Reelmaster Universal Frame Layout

3 UNIT UNIVERSAL FRAME CONTAINS
1–Center Frame 2–Trailing Units

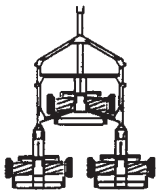

7 UNIT UNIVERSAL FRAME CONTAINS
1–Center Frame 4–Trailing Units
1–Right Hand Wing Unit 1–Left Hand Wing Unit
1–Right Hand Wing Extension 1–Left Hand Wing Extension

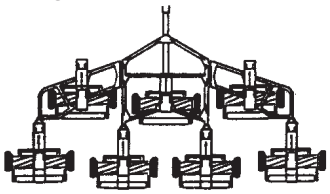

5 UNIT UNIVERSAL FRAME CONTAINS
1–Center Frame 2–Trailing Units
1–Right Hand Wing Unit 1–Left Hand Wing Unit

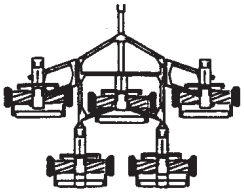

T–2816