Form No. 3430-267 Rev B

TORO®

Count on it.

Operator's Manual

Dethatching Unit

Greensmaster® 3000 Series Traction Unit

Model No. 04479—Serial No. 403450000 and Up

Register at www.Toro.com.
Original Instructions (EN)

CE

3430-267

This product complies with all relevant European directives. For details, please see the Declaration of Incorporation (DOI) at the back of this publication.

Introduction

The dethatching unit is mounted to a traction unit and is intended to be used by professional, hired operators in commercial applications. It is designed primarily for dethatching grass on well-maintained lawns in parks, golf courses, sports fields, and on commercial grounds. Using this product for purposes other than its intended use could prove dangerous to you and bystanders.

Read this information carefully to learn how to operate and maintain your product properly and to avoid injury and product damage. You are responsible for operating the product properly and safely.

Visit www.Toro.com for product safety and operation training materials, accessory information, help finding a dealer, or to register your product.

Whenever you need service, genuine Toro parts, or additional information, contact an Authorized Service Dealer or Toro Customer Service and have the model and serial numbers of your product ready. Figure 1 identifies the location of the model and serial numbers on the product. Write the numbers in the space provided.

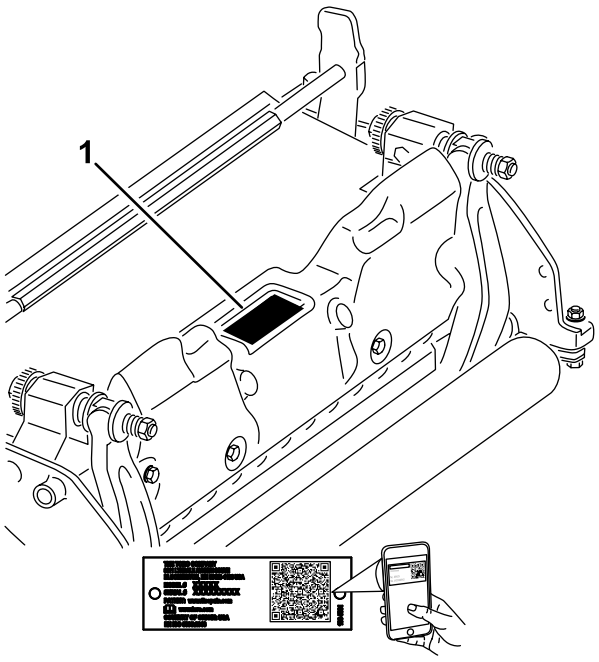

g272197

Figure 1

1. Location of the model and serial numbers

Model No. _____

Serial No. _____

This manual identifies potential hazards and has safety messages identified by the safety-alert symbol (Figure 2), which signals a hazard that may cause serious injury or death if you do not follow the recommended precautions.



g000502

Figure 2

1. Safety alert symbol

This manual uses 2 words to highlight information. **Important** calls attention to special mechanical information and **Note** emphasizes general information worthy of special attention.

© 2020—The Toro® Company
8111 Lyndale Avenue South
Bloomington, MN 55420

Contact us at www.Toro.com.
Printed in the USA
All Rights Reserved

Contents

Safety 3
General Safety 3
Cutting Unit Safety 4
Blade Safety 4
Safety and Instructional Decals 4
Setup 5
1 Installing the Front Roller 5
2 Repositioning the Counterweights 5
3 Installing the Hoop Link, Offset Link, or Chain Link 6
4 Adjusting the Reel Blades for Positive Setting (Above Ground) 7
5 Adjusting the Reel Blades For Negative Setting (Below Ground) 7
6 Installing the Dethatching Unit 8
Product Overview 9
Specifications 9
Attachments/Accessories 9
Operation 9
Training Period 9
Operating Tips 9
Maintenance 10
Disassembling the Reel 10

Safety

This machine has been designed in accordance with EN ISO 5395 and ANSI B71.4:2017.

General Safety

This product is capable of amputating hands and feet. Always follow all safety instructions to avoid serious personal injury.

- Read and understand the contents of this *Operator's Manual* before starting the machine.
- Use your full attention while operating the machine. Do not engage in any activity that causes distractions; otherwise, injury or property damage may occur.
- Do not put your hands or feet near moving components of the machine.
- Do not operate the machine without all guards and other safety protective devices in place and functioning properly on the machine.
- Keep clear of any discharge opening.
- Keep bystanders and children out of the operating area. Never allow children to operate the machine.
- Before you leave the operator's position, do the following:
  - Park the machine on a level surface.
  - Lower the cutting unit(s).
  - Disengage the drives.
  - Engage the parking brake (if equipped).
  - Shut off the engine and remove the key (if equipped).
  - Wait for all movement to stop.

Improperly using or maintaining this machine can result in injury. To reduce the potential for injury, comply with these safety instructions and always pay attention to the safety-alert symbol ⚠, which means Caution, Warning, or Danger—personal safety instruction. Failure to comply with these instructions may result in personal injury or death.

Cutting Unit Safety

- The cutting unit is only a complete machine when installed on a traction unit. Read the traction unit *Operator's Manual* carefully for complete instructions on the safe use of the machine.
- Stop the machine, remove the key (if equipped), and wait for all movement to stop before inspecting the attachment after striking an object or if there is an abnormal vibration in the machine. Make all necessary repairs before resuming operation.
- Keep all parts in good working condition and all hardware tightened. Replace all worn or damaged decals.
- Use only accessories, attachments, and replacement parts approved by Toro.

Blade Safety

A worn or damaged blade can break, and a piece of the blade could be thrown toward you or bystanders, resulting in serious personal injury or death.

- Inspect the blade periodically for wear or damage.
- Use care when checking the blades. Wrap the blades or wear gloves, and use caution when servicing the blades. Only replace or sharpen the blades; never straighten or weld them.
- On multi-bladed machines, take care as rotating 1 blade can cause other blades to rotate.

Safety and Instructional Decals

Safety decals and instructions are easily visible to the operator and are located near any area of potential danger. Replace any decal that is damaged or missing.

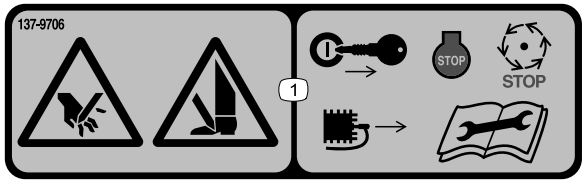

decal137-9706

137-9706

1. Cutting hazard of the hand or foot—shut off the engine, remove the key or disconnect the spark plug, wait for all moving parts to stop, and read the *Operator's Manual* before performing maintenance.

Setup

1

Installing the Front Roller

No Parts Required

Procedure

The dethatching unit is shipped without a front roller. Install the roller using the loose parts supplied with the dethatching unit and *Installation Instructions* included with the roller.

2

Repositioning the Counterweights

No Parts Required

Procedure

The dethatching units are shipped with the counterweight mounted to the right end and the motor mount to the left end of the dethatching unit. To move the counterweight to the other side of the dethatching unit, do the following steps:

1. Remove the 2 capscrews that secure the counterweight to the right end of the dethatching unit.
2. Remove the counterweight (Figure 3).

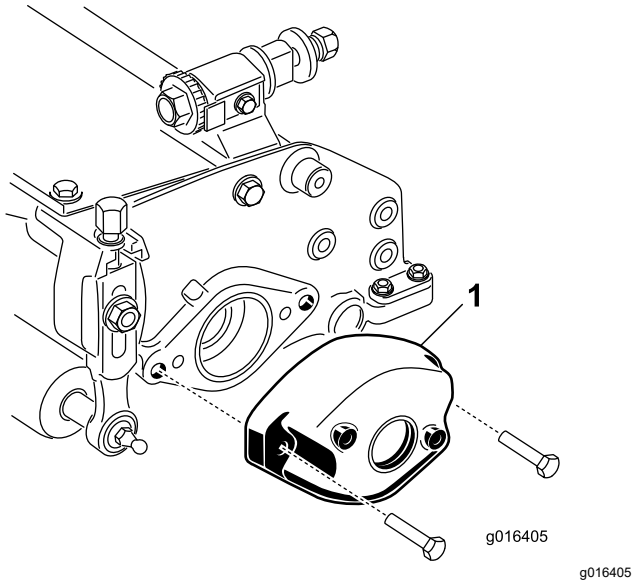

Figure 3

1. Counterweight

3. Remove the 2 Allen-head screws that secure the motor mount to the left end of the dethatching unit.
4. Remove the motor mount (Figure 4).
5. Apply grease to the inside diameter of the drive spline (Figure 4).

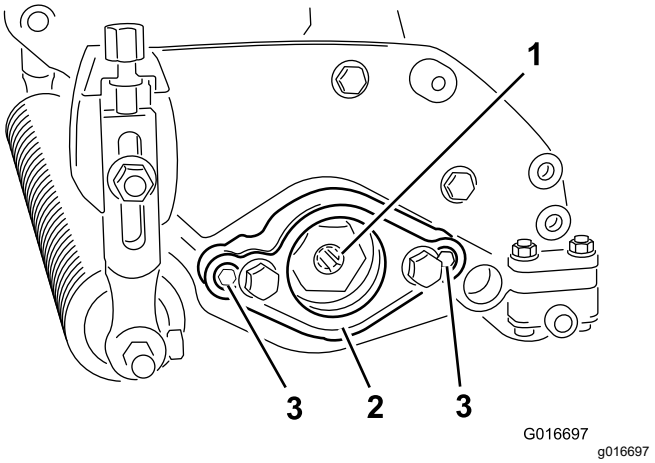

Figure 4

1. Drive spline
2. Motor mount
3. Allen-head screw

6. On the right end of the dethatching unit, apply a light coating of oil to the O-ring and install the motor mount with the 2 Allen-head screws previously removed.

   Note: Torque the screws to 16 to 20 N-m (12 to 15 ft-lb).

7. On the left end of the dethatching unit, apply a light coating of oil to the O-ring and install the counterweight with the screws previously removed.

   Note: Torque the screws to 16 to 20 N-m (12 to 15 ft-lb).

3

Installing the Hoop Link, Offset Link, or Chain Link

No Parts Required

Procedure

For dethatching units that will be mounted on a traction unit with a serial number prior to 240000001, the proper lift link must be obtained and installed.

The 2 capscrews used to mount the hoop, offset, or chain link are installed on the dethatching unit. Remove these screws and use them to install your required link.

- A **hoop link** (Part No. 105-5740) as shown in Figure 5 is required for the Greensmaster 3000, 3000-D, 3050, 3100, 3150, and 3150-Q traction units (it is supplied with the above Greensmaster traction units).
  1. Install the hoop link to the top of the dethatching unit with 2 capscrews.
  2. Torque the capscrews to 34 to 40 N·m (25 to 30 ft-lb).

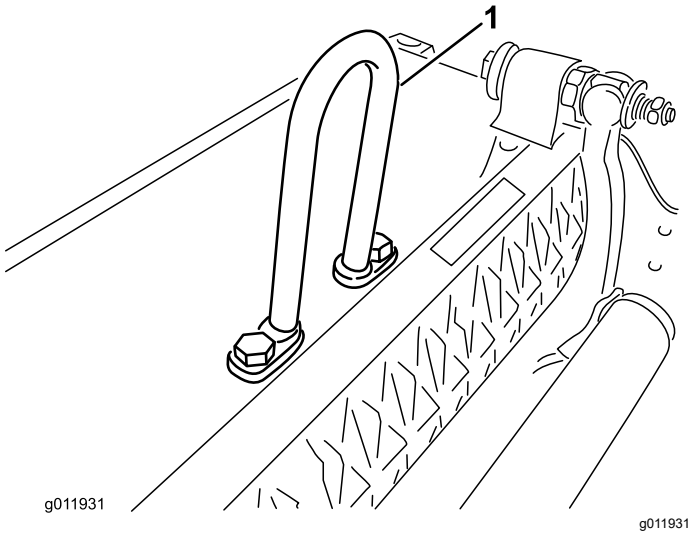

Figure 5

1. Hoop link

- An **offset link** (Part No. 110-2397) is required for the Greensmaster 3250-D traction units (it is supplied with the Greensmaster 3250-D traction unit).
  1. Position the lift hook offset toward the front of the dethatching unit.
  2. Install the offset link (Figure 6) to the top of the dethatching unit with 2 capscrews.
  3. Torque the capscrews to 34 to 40 N·m (25 to 30 ft-lb).

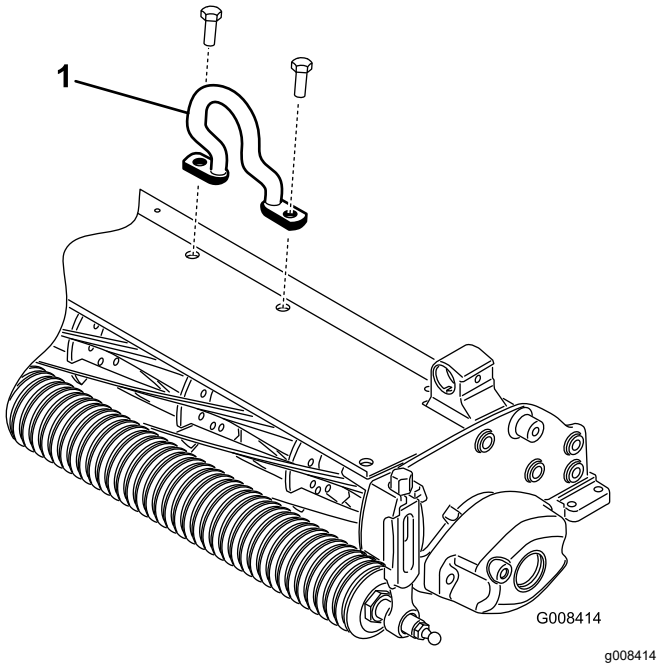

Figure 6

1. Offset lift hook

- A **chain link** (Part No. 106-2601) and a mounting bracket (Part No. 105-5738) may also be used on the Greensmaster 3250-D traction unit.
  1. Install the chain link to the top of the dethatching unit with the mounting bracket and 2 capscrews.
  2. Torque the capscrews to 34 to 40 N·m (25 to 30 ft-lb) (Figure 7).

Note: When mounting the dethatching unit to the traction unit, hook the wider end of the chain link to the lift arm.

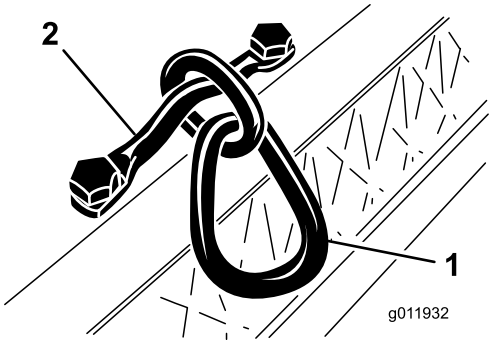

g011932

Figure 7

1. Chain link
2. Mounting bracket

4

Adjusting the Reel Blades for Positive Setting (Above Ground)

No Parts Required

Procedure

1. Place the dethatching unit on a level surface.
2. Place a gauge bar, which has the desired height of blade above ground, under each end of the dethatching unit (Figure 8).

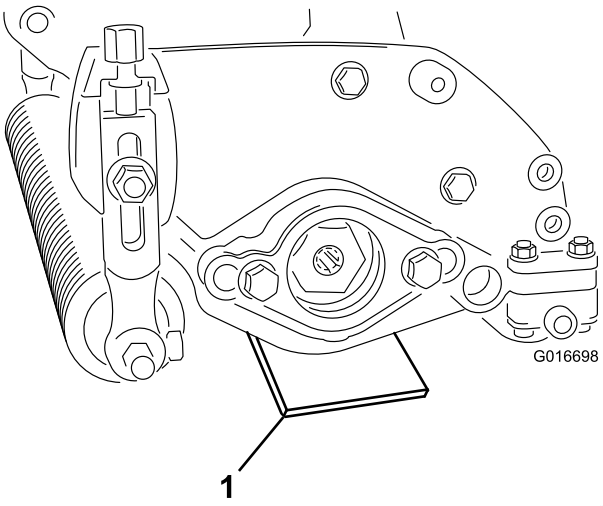

g016698

Figure 8

1. Gauge bar

3. With the rear roller contacting the level surface, loosen both height-of-cut nuts.
4. Rotate the height-of-cut until both ends of the front roller contact the level surface.
5. Verify contact by using a piece of paper to check each roller end.
6. Tighten both height-of-cut knob locknuts.

5

Adjusting the Reel Blades For Negative Setting (Below Ground)

No Parts Required

Procedure

Note: Maximum recommended negative setting is 5 mm (3/16 inch) deep blade penetration.

1. Place the dethatching unit on a level surface.
2. Place 4 gauge bars, set to the desired depth of blade penetration below ground, under the front roller and rear roller of the dethatching unit (Figure 9).

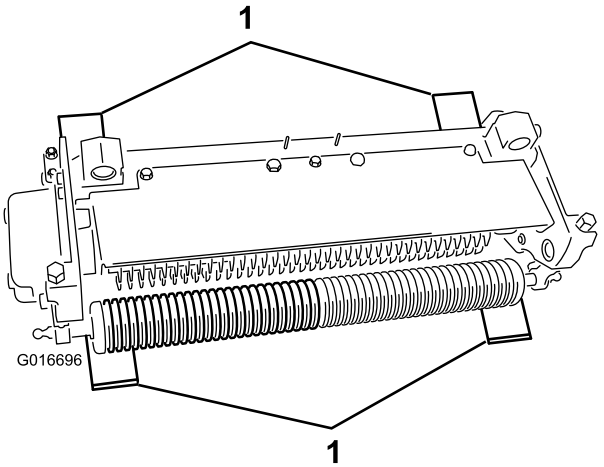

g016696

Figure 9

1. Gauge bar

3. With the rear roller contacting the level surface, loosen both height-of-cut nuts.
4. Rotate the height-of-cut until both ends of the front roller contact the level surface.
5. Verify contact by using a piece of paper to check each roller end.

6. Tighten both height-of-cut knob locknuts.

6

Installing the Dethatching Unit

No Parts Required

Important: **If you set the dethatching reel at a negative setting, take care to prevent damaging the reel blades, due to contact with concrete floors or paved surfaces.**

Note: The dethatching unit comes configured for left-hand drive from the factory. It may need to be configured for a right-hand drive. Refer to 2 Repositioning the Counterweights (page 5).

Product Overview

Specifications

Traction-Unit Compatibility	The dethatching unit mounts on the Greensmaster 3000, 3000-D, 3050, 3100, 3150, 3250-D and 3150-Q traction units.
Height of Cut	Dethatching depth is adjusted on the front roller by two vertical screws and held by two locking capscrews
Height-of-Cut Range	Bench HOC range is 4.78 mm (0.188 inch) below ground level to 6.35 mm (0.250 inch) above ground level.
Reel Bearings	Two sealed stainless steel deep groove ball bearings, 30 mm inside diameter slip fit onto reel shaft retained by internally splined threaded drive insert. Additional inboard seal / slinger along with sealed external bearing housing for added protection. Reel position maintained by a wave washer with no adjusting nut.
Rollers	The rear roller is a 5.1 cm (2 inch) diameter steel full roller.
Grass Shield	Non-adjustable shield with adjustable cutoff bar to improve grass discharge from reel in wet conditions.
Counterweight	A cast iron weight mounted opposite to the drive motor balances the dethatching unit.
Net Weight	31 kg (68 lb)

Attachments/Accessories

A selection of Toro approved attachments and accessories is available for use with the machine to enhance and expand its capabilities. Contact your Authorized Service Dealer or authorized Toro distributor or go to www.Toro.com for a list of all approved attachments and accessories.

To ensure optimum performance and continued safety certification of the machine, use only genuine Toro replacement parts and accessories. Replacement parts and accessories made by other manufacturers could be dangerous, and such use could void the product warranty.

Operation

Training Period

Before operating the dethatching unit on a green, evaluate the performance of the dethatching unit at the desired setting. Operate in a clear, unused area to determine if the desired results will be achieved. Adjust the dethatching unit when changing settings as desired.

Note: When the dethatching units are mounted on Greensmaster 3200, 3200-D or 3250-D traction units and are operated under heavy loads, you may need to adjust the carrier frame and unit circuit relief valve.

Operating Tips

- Operate the traction unit at full throttle, varying the ground speed to meet dethatching loads.
- The maximum recommended negative setting on the dethatching blades is 5 mm (3/16 inch) deep penetration.
- The power requirements to operate the dethatching unit will vary with turf and soil conditions.
- The travel speed may need to be reduced in some conditions.

Maintenance

Note: Determine the left and right sides of the machine from the normal operating position.

Disassembling the Reel

Disassemble the reel whenever you need to change a blade or replace the reel bearings.

Important: **Ensure that the 2 shaft retainers and spacer are in place before installing the bearing on the reel (Figure 10). Torque the insert nuts to 136 N·m (100 ft-lb).**

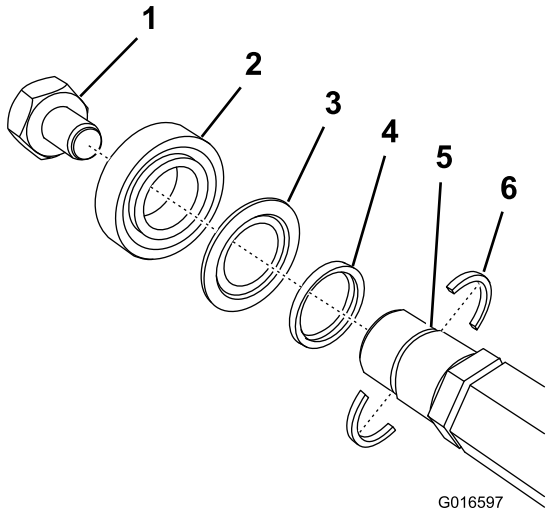

Figure 10

1. Left-hand threaded insert nut
2. Bearing
3. Seal
4. Spacer
5. Slot in shaft
6. Shaft retainer (install these first)

If you install the optional spring steel dethatcher blades (Part Number 121-6675), replace the end hex spacer (Part Number 120-3232—shown in Figure 11) with a main spacer (Part Number 120-3167).

Contact your authorized Toro distributor for parts information.

Note: The end hex spacer is located between a pair of hex spacers and a hex nut as shown in Figure 11.

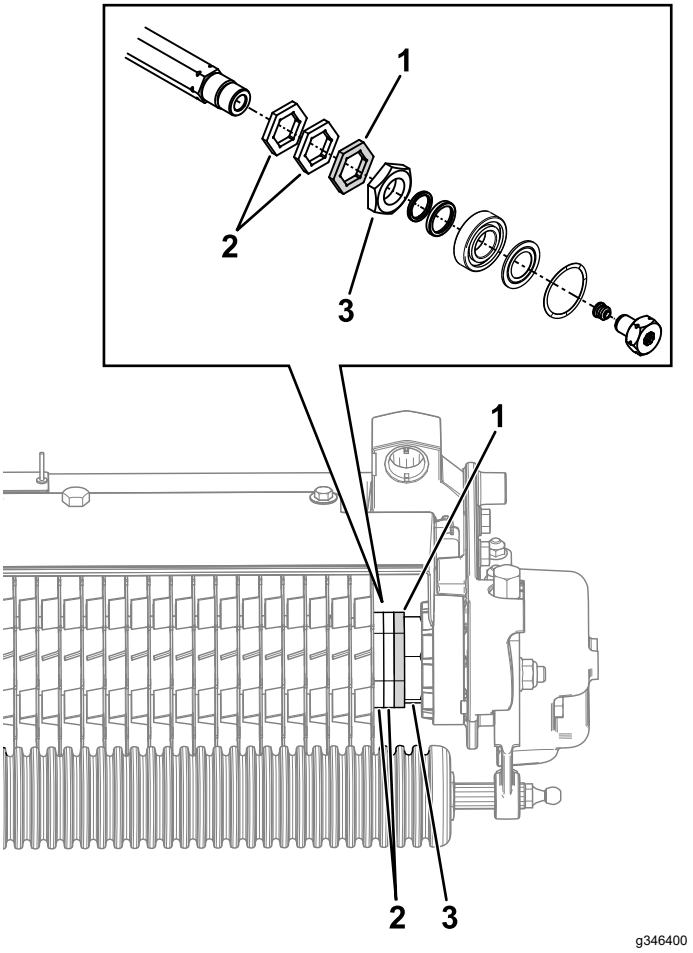

Figure 11

1. End hex spacer
2. Hex spacers
3. Hex nut

Declaration of Incorporation

The Toro Company, 8111 Lyndale Ave. South, Bloomington, MN, USA declares that the following unit(s) conform(s) to the directives listed, when installed in accordance with the accompanying instructions onto certain Toro models as indicated on the relevant Declarations of Conformity.

Model No.	Serial No.	Product Description	Invoice Description	General Description	Directive
04479	403450000 and Up	Dethatching Unit, Greensmaster 3000 Series Traction Unit	THATCHING REEL	Thatching Reel	2006/42/EC

Relevant technical documentation has been compiled as required per Part B of Annex VII of 2006/42/EC.

We will undertake to transmit, in response to requests by national authorities, relevant information on this partly completed machinery. The method of transmission shall be electronic transmittal.

This machinery shall not be put into service until incorporated into approved Toro models as indicated on the associated Declaration of Conformity and in accordance with all instructions, whereby it can be declared in conformity with all relevant Directives.

Certified:



John Heckel
Engineering Director
8111 Lyndale Ave. South
Bloomington, MN 55420, USA
February 11, 2019

Authorized Representative:

Marcel Dutrieux
Manager European Product Integrity
Toro Europe NV
Nijverheidsstraat 5
2260 Oevel
Belgium

The Toro Warranty

Two-Year or 1,500 Hours Limited Warranty

Conditions and Products Covered

The Toro Company and its affiliate, Toro Warranty Company, pursuant to an agreement between them, jointly warrant your Toro Commercial product ("Product") to be free from defects in materials or workmanship for 2 years or 1,500 operational hours*, whichever occurs first. This warranty is applicable to all products with the exception of Aerators (refer to separate warranty statements for these products). Where a warrantable condition exists, we will repair the Product at no cost to you including diagnostics, labor, parts, and transportation. This warranty begins on the date the Product is delivered to the original retail purchaser.
* Product equipped with an hour meter.

Instructions for Obtaining Warranty Service

You are responsible for notifying the Commercial Products Distributor or Authorized Commercial Products Dealer from whom you purchased the Product as soon as you believe a warrantable condition exists. If you need help locating a Commercial Products Distributor or Authorized Dealer, or if you have questions regarding your warranty rights or responsibilities, you may contact us at:

Toro Commercial Products Service Department
Toro Warranty Company
8111 Lyndale Avenue South
Bloomington, MN 55420-1196

952–888–8801 or 800–952–2740
E-mail: commercial.warranty@toro.com

Owner Responsibilities

As the product owner, you are responsible for required maintenance and adjustments stated in your *Operator's Manual*. Repairs for product issues caused by failure to perform required maintenance and adjustments are not covered under this warranty.

Items and Conditions Not Covered

Not all product failures or malfunctions that occur during the warranty period are defects in materials or workmanship. This warranty does not cover the following:

- Product failures which result from the use of non-Toro replacement parts, or from installation and use of add-on, or modified non-Toro branded accessories and products.
- Product failures which result from failure to perform recommended maintenance and/or adjustments.
- Product failures which result from operating the Product in an abusive, negligent, or reckless manner.
- Parts consumed through use that are not defective. Examples of parts which are consumed, or used up, during normal Product operation include, but are not limited to, brake pads and linings, clutch linings, blades, reels, rollers and bearings (sealed or greasable), bed knives, spark plugs, castor wheels and bearings, tires, filters, belts, and certain sprayer components such as diaphragms, nozzles, and check valves.
- Failures caused by outside influence, including, but not limited to, weather, storage practices, contamination, use of unapproved fuels, coolants, lubricants, additives, fertilizers, water, or chemicals.
- Failure or performance issues due to the use of fuels (e.g. gasoline, diesel, or biodiesel) that do not conform to their respective industry standards.
- Normal noise, vibration, wear and tear, and deterioration. Normal "wear and tear" includes, but is not limited to, damage to seats due to wear or abrasion, worn painted surfaces, scratched decals or windows.

Parts

Parts scheduled for replacement as required maintenance are warranted for the period of time up to the scheduled replacement time for that part. Parts replaced under this warranty are covered for the duration of the original product warranty and become the property of Toro. Toro will make the final decision whether to repair any existing part or assembly or replace it. Toro may use remanufactured parts for warranty repairs.

Deep Cycle and Lithium-Ion Battery Warranty

Deep cycle and Lithium-Ion batteries have a specified total number of kilowatt-hours they can deliver during their lifetime. Operating, recharging, and maintenance techniques can extend or reduce total battery life. As the batteries in this product are consumed, the amount of useful work between charging intervals will slowly decrease until the battery is completely worn out. Replacement of worn out batteries, due to normal consumption, is the responsibility of the product owner. Note: (Lithium-Ion battery only): Pro-rated after 2 years. Refer to the battery warranty for additional information.

Lifetime Crankshaft Warranty (ProStripe 02657 Model Only)

The Prostripe which is fitted with a genuine Toro Friction Disc and Crank-Safe Blade Brake Clutch (integrated Blade Brake Clutch (BBC) + Friction Disc assembly) as original equipment and used by the original purchaser in accordance with recommended operating and maintenance procedures, are covered by a Lifetime Warranty against engine crankshaft bending. Machines fitted with friction washers, Blade Brake Clutch (BBC) units and other such devices are not covered by the Lifetime Crankshaft Warranty.

Maintenance is at Owner's Expense

Engine tune-up, lubrication, cleaning and polishing, replacement of filters, coolant, and completing recommended maintenance are some of the normal services Toro products require that are at the owner's expense.

General Conditions

Repair by an Authorized Toro Distributor or Dealer is your sole remedy under this warranty.

Neither The Toro Company nor Toro Warranty Company is liable for indirect, incidental or consequential damages in connection with the use of the Toro Products covered by this warranty, including any cost or expense of providing substitute equipment or service during reasonable periods of malfunction or non-use pending completion of repairs under this warranty. Except for the Emissions warranty referenced below, if applicable, there is no other express warranty. All implied warranties of merchantability and fitness for use are limited to the duration of this express warranty.

Some states do not allow exclusions of incidental or consequential damages, or limitations on how long an implied warranty lasts, so the above exclusions and limitations may not apply to you. This warranty gives you specific legal rights, and you may also have other rights which vary from state to state.

Note Regarding Emissions Warranty

The Emissions Control System on your Product may be covered by a separate warranty meeting requirements established by the U.S. Environmental Protection Agency (EPA) and/or the California Air Resources Board (CARB). The hour limitations set forth above do not apply to the Emissions Control System Warranty. Refer to the Engine Emission Control Warranty Statement supplied with your product or contained in the engine manufacturer's documentation.

Countries Other than the United States or Canada

Customers who have purchased Toro products exported from the United States or Canada should contact their Toro Distributor (Dealer) to obtain guarantee policies for your country, province, or state. If for any reason you are dissatisfied with your Distributor's service or have difficulty obtaining guarantee information, contact your Authorized Toro Service Center.