Form No. 3325-633

# 52” Side Discharge Mower

## Yard & Garden Tractor

**Model No. 78253–210000001 and Up**

# Parts Catalog

### Ordering Replacement Parts

To order replacement parts, please supply: the part number, the quantity, and the description of each part desired.

### Understanding Reference Numbers

Each identified part in an illustration has a reference number. The reference number for a part also appears in the parts list, along with other information about the part.

This catalog uses two special reference number formats, one to indicate parts in a service assembly and another to indicate the quantity of a given part in an illustration.

#### Service Assembly Reference Numbers

Parts in service assemblies have reference numbers in the form **a:b.** The **a** represents the reference number of the entire service assembly and the **b** represents a sequential number unique to each part within the service assembly.

For example, a wheel assembly might be identified by reference number **6**, the tire by **6:1**, the valve by **6:2**, and the wheel by **6:3**. When you order the assembly identified by reference number 6, you receive all parts identified by reference numbers 6:1, 6:2, and 6:3. However, you may also order any part individually.

Reference numbers of this type appear in illustrations and in part lists.

#### Reference Numbers Indicating Quantity

In an illustration, if a reference number indicates more than one part, the reference number has the form **nX y.** The **n** represents the quantity of the part, the **X** is the multiplication symbol, and the **y** represents the reference number.

For example, in an illustration, the reference number **2X 37** means that two of the parts identified by reference number 37 are indicated.

© The TORO Company — 2001
All Rights Reserved

## Contents


| Description | Page |
|---|---|
| Gage Wheels & Lift Brackets Assembly | 3 |
| Blades, Spindles & Deflector Assembly | 4 |
| Drive & Belt Covers Assembly | 5 |
| Decals & Baffles Assembly | 6 |


## Accessories

| Description | Model / Part No. | Description | Model / Part No. |
|---|---|---|---|

## Part Description Abbreviations

Part descriptions in this catalog may include the following abbreviations.

| Abbreviation | Meaning | Abbreviation | Meaning |
|---|---|---|---|
| AR | as required | HYD | hydraulic |
| ASM | assembly | INC | incorporated |
| CARR | carriage | LH | left hand |
| DEG | degrees | NI | nylon insert |
| FH | flat head | PPH | Phillips pan head |
| GA | gauge | PTH | Phillips truss head |
| HF | hex flange | PTO | power take off |
| HH | hex head | RH | right hand |
| HHF | hex head flange | SFH | slotted fillister head |
| HLH | hex lag head | SHH | slotted hex head |
| HJ | hex jam | SQH | square head |
| HOC | height-of-cut | SHWH | slotted hex washer head |
| HS | hex socket | SPH | slotted pan head |
| HSBH | hex socket button head | SRH | slotted round head |
| HSFH | hex socket flat head | STD | standard |
| HSH | hex socket head | TAP | self tapping |
| HWH | hex washer head | TTH | Torx truss head |
| HWHTF | hex washer head thread forming | WH | wing head |

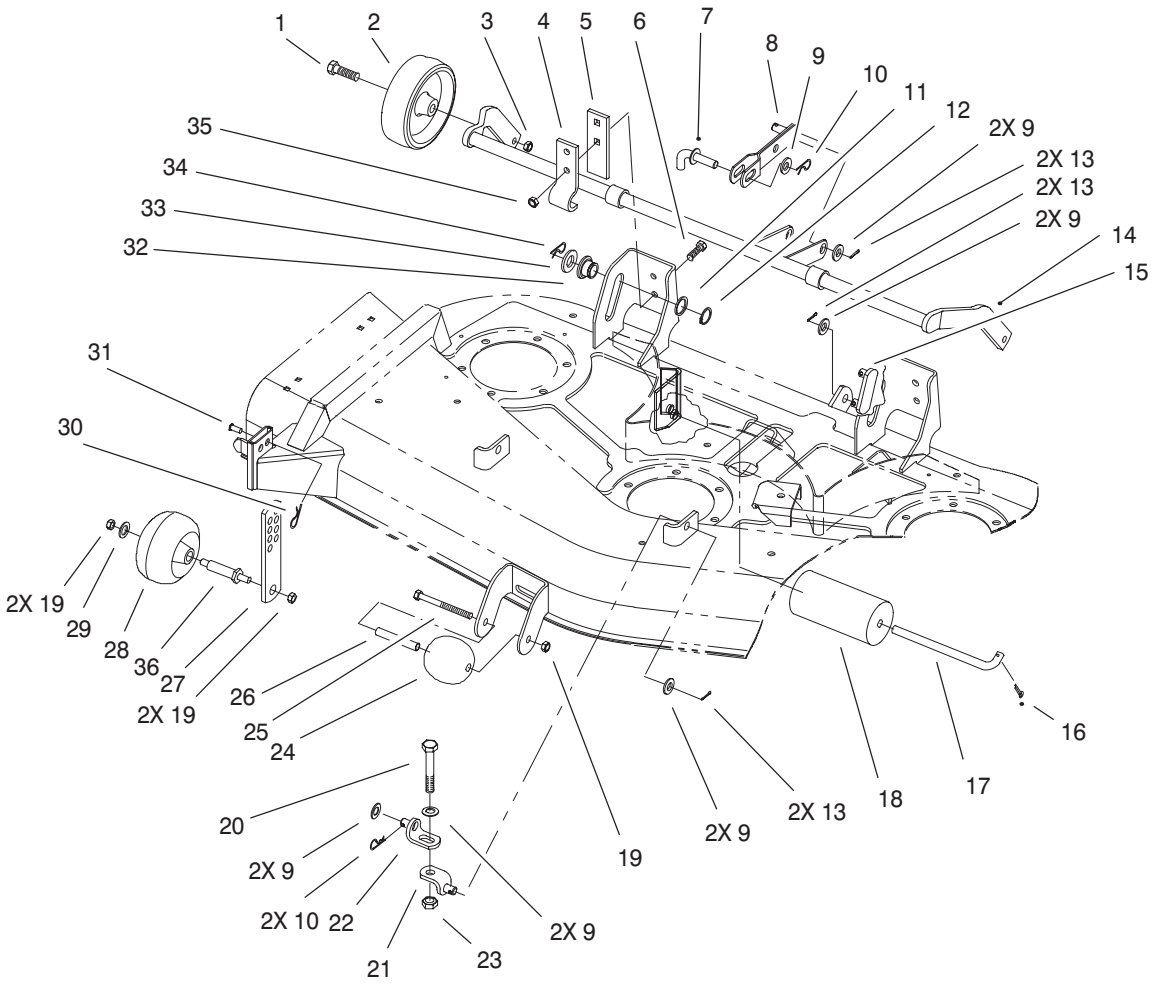


Sheet No.:2

# Gage Wheels & Lift Brackets Assembly

| Ref. No. | Part No. | Qty. | Description |
|---|---|---|---|
| 1 | 92–1057 | 2 | Bolt–Shoulder |
| 2 | 92–6959 | 2 | Wheel |
| 3 | 32146–2 | 2 | Nut–Lock, NI |
| 4 | 110838–03 | 2 | Bar |
| 5 | 110837–03 | 2 | Bracket–Pivot |
| 6 | 323–7 | 4 | Screw–HH |
| 7 | 100–8734 | 1 | Link Pin ASM |
| 8 | 100–7503–03 | 1 | Lift Arm ASM |
| 9 | 3256–26 | 11 | Washer–Flat |
| 10 | 9335064 | 3 | Pin–Hair |
| 11 | 9202394 | 2 | Washer |
| 12 | 32151–29 | 2 | Ring–Snap, External |
| 13 | 3272–21 | 6 | Pin–Cotter |
| 14 | 100–6073–03 | 1 | Wheel Carrier ASM |
| 15 | 100–7501 | 1 | Link Bracket–Rear |
| 16 | 3272–11 | 2 | Pin–Cotter |
| 17 | 40–0340 | 2 | Shaft–Roller, Rear |
| 18 | 36–1740 | 2 | Roller–Deck |
| 19 | 3296–39 | 5 | Nut–Lock, NI |
| 20 | 325–13 | 2 | Screw–HH |
| 21 | 86–9240 | 2 | Bracket–Lift, Lower |
| 22 | 86–9250 | 2 | Bracket–Lift, Upper |
| 23 | 3218–5 | 2 | Nut–Jam |
| 24 | 29–4820 | 1 | Roller |
| 25 | 323–16 | 1 | Screw–HH |
| 26 | 94–2500 | 1 | Tube – Wheel Spacer |

| Ref. No. | Part No. | Qty. | Description |
|---|---|---|---|
| 27 | 100–8736 | 2 | Plate–Gage Wheel |
| 28 | 68–2730 | 2 | Gage–Wheel |
| 29 | 3256–24 | 2 | Washer–Flat |
| 30 | 9335054 | 2 | Pin–Hair |
| 31 | 283–2 | 2 | Pin–Clevis |
| 32 | 78–7340 | 2 | Roller–Lift |
| 33 | 3256–28 | 2 | Washer–Flat |
| 34 | 9335074 | 2 | Pin–Hair |
| 35 | 32128–21 | 4 | Nut–HF |
| 36 | 99–2842 | 2 | Spacer–Wheel |

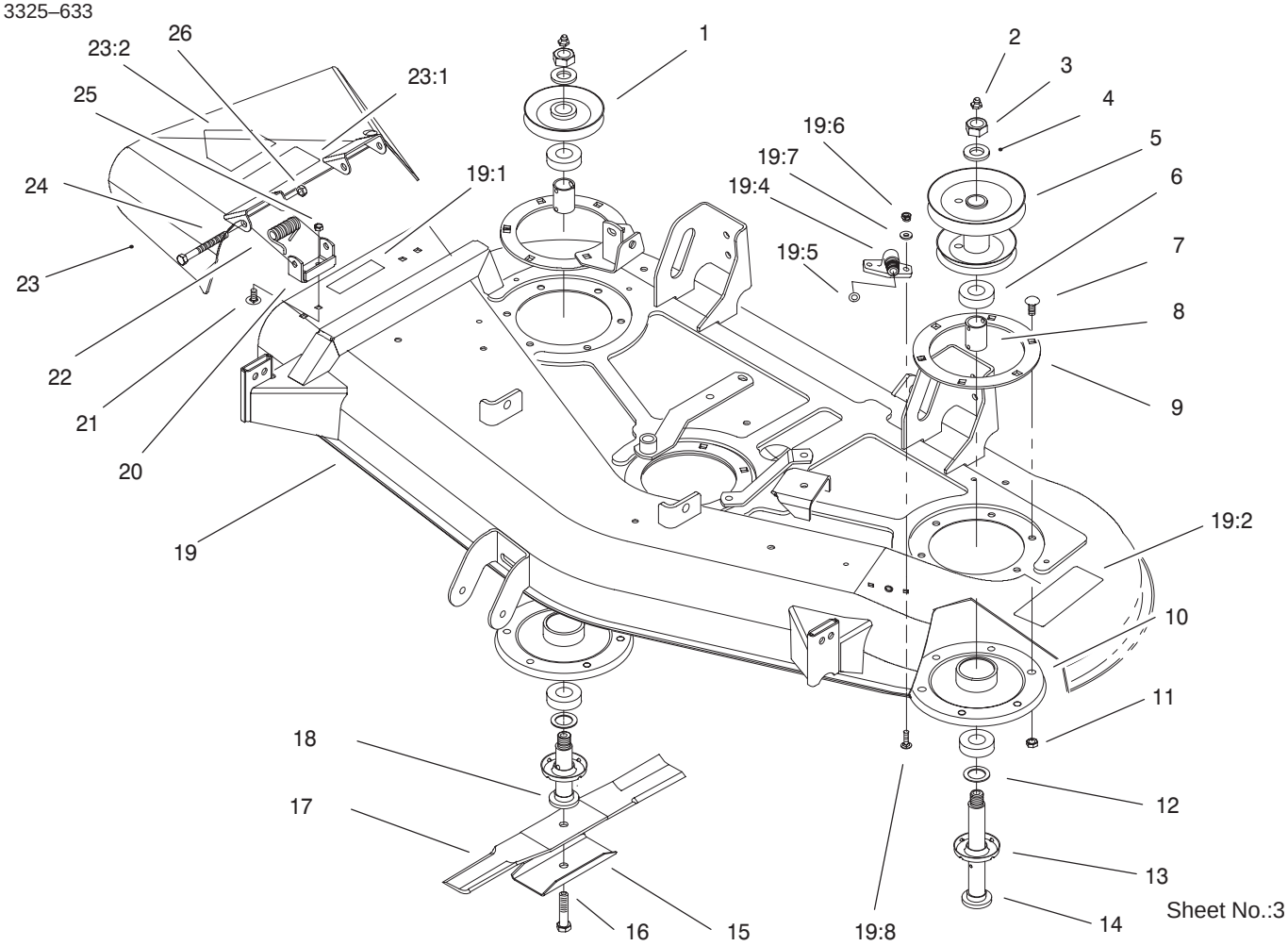


# Blades, Spindles & Deflector Assembly

| Ref. No. | Part No. | Qty. | Description |
|---|---|---|---|
| 1 | 79–0620 | 2 | Pulley |
| 2 | 302–2 | 3 | Fitting–Grease |
| 3 | 3220–7 | 3 | Nut–Jam |
| 4 | 3256–28 | 3 | Washer–Flat |
| 5 | 94–4800 | 1 | Pulley – Double |
| 6 | 113514 | 6 | Bearing |
| 7 | 3231–22 | 14 | Screw–CARR |
| 8 | 79–1890 | 3 | Spacer–Bearing |
| 9 | 27–7680–03 | 3 | Ring–Deck Support |
| 10 | 79–2480–03 | 3 | Housing–Spindle |
| 11 | 32128–21 | 14 | Nut–HF |
| 12 | 88–7540 | 3 | Washer – Backup |
| 13 | 79–1920 | 3 | Shield–Bearing |
| 14 | 94–2523 | 1 | Shaft – Spindle |
| 15 | 92–9820 | 3 | Stiffener – Blade |
| 16 | 44–2200 | 3 | Screw – Blade |
| 17 | 27–0990 | 3 | Blade |
| 18 | 79–1900 | 2 | Shaft–Spindle |
| 19 | 94–9793 | 1 | Deck ASM |
| 19:1 | 93–7009 | 1 | Decal–Danger |
| 19:2 | 93–7317 | 1 | Decal – Danger |
| 19:4 | 95–2747 | 2 | Fitting–Washout |
| 19:5 | 46–6290 | 2 | O–Ring |
| 19:6 | 3296–16 | 4 | Nut–Lock, NI |
| 19:7 | 3256–1 | 4 | Washer–Flat |
| 19:8 | 3229–1 | 4 | Screw–CARR |

| Ref. No. | Part No. | Qty. | Description |
|---|---|---|---|
| 20 | 29–5590–03 | 2 | Bracket–Pivot |
| 21 | 3230–18 | 4 | Screw–CARR |
| 22 | 40–6230 | 2 | Spring |
| 23 | 94–1581 | 1 | Deflector ASM |
| 23:1 | 93–7317 | 1 | Decal – Danger |
| 23:2 | 93–7316 | 1 | Decal – Danger |
| 24 | 3211–15 | 2 | Screw–HH |
| 25 | 3296–29 | 4 | Nut–Lock |
| 26 | 3296–5 | 2 | Nut–Lock NI |

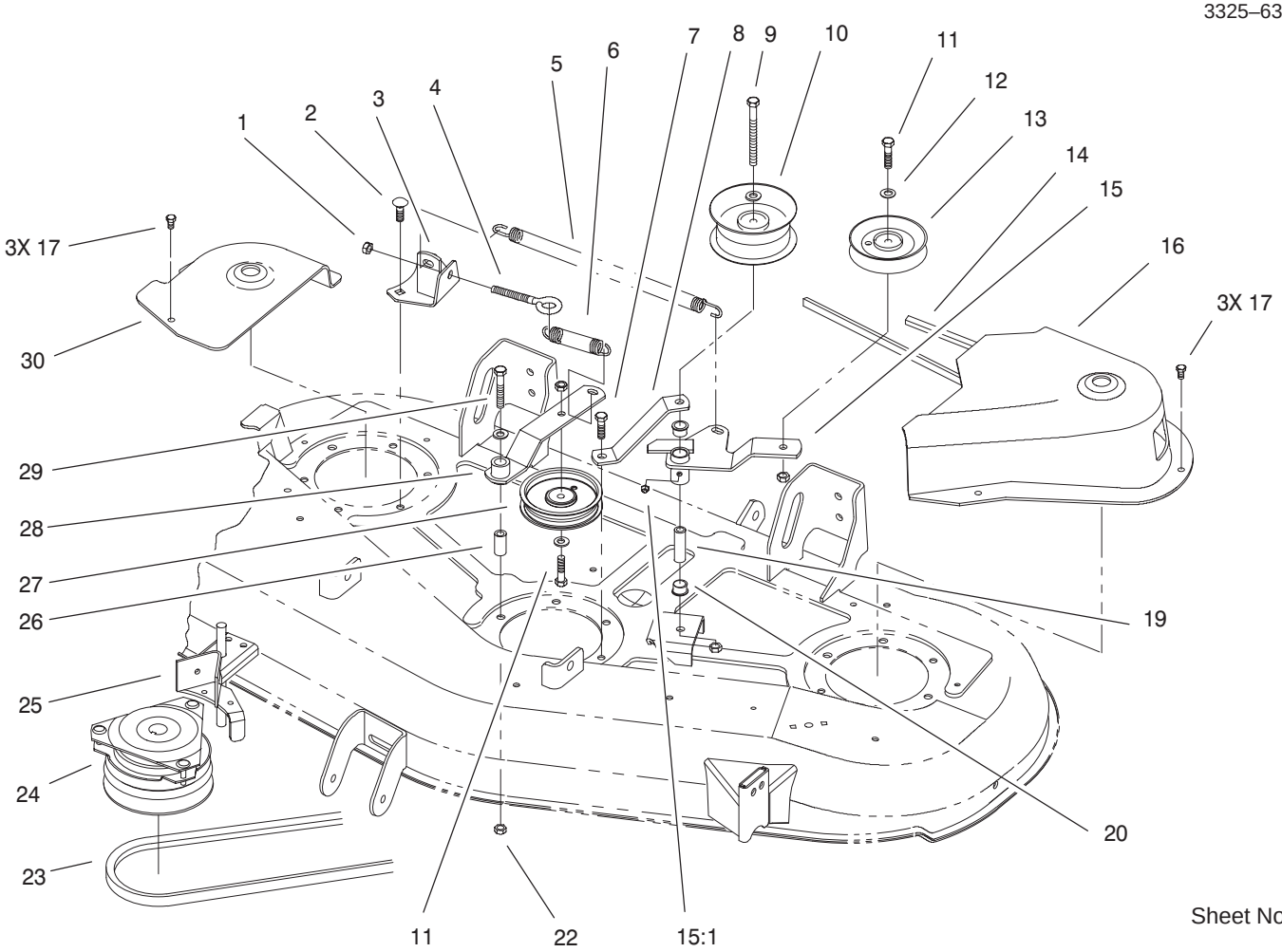


Sheet No.:4

# Drive & Belt Covers Assembly

| Ref. No. | Part No. | Qty. | Description |
|---|---|---|---|
| 1 | 3296–39 | 1 | Nut–Lock, NI |
| 2 | 3231–22 | 2 | Screw–CARR |
| 3 | 94–2546–03 | 1 | Bracket–Spring |
| 4 | 94–2547 | 1 | Eyebolt |
| 5 | 94–5385 | 1 | Spring – Extension |
| 6 | 51–3650 | 1 | Spring – Extension |
| 7 | 323–44 | 1 | Screw–HH |
| 8 | 94–4801–03 | 1 | Strap–Support |
| 9 | 323–16 | 1 | Screw–HH |
| 10 | 94–4935 | 1 | Pulley – Idler |
| 11 | 323–8 | 2 | Screw–HH |
| 12 | 3256–24 | 4 | Washer–Flat |
| 13 | 92–7099 | 1 | Pulley–Idler |
| 14 | 94–2501 | 1 | V–Belt |
| 15 | 95–7897 | 1 | Idler Arm Assembly |
| 15:1 | 302–5 | 1 | Fitting–Grease |
| 16 | 94–2522 | 1 | Cover – Belt, LH |
| 17 | 46–8560 | 6 | Screw–HHF |
| 19 | 79–2760 | 1 | Spacer |
| 20 | 109859 | 2 | Bushing |
| 22 | 32128–21 | 7 | Nut–HF |
| 23 | 94–2513 | 1 | Belt – V |
| 24 | 100–6059 | 1 | Clutch–PTO |
| 25 | 100–7540–03 | 1 | Deck Upstop ASM |
| 26 | 51–3640 | 1 | Sleeve–Pivot, Idler |
| 27 | 93–1622 | 1 | Pulley–Idler |

| Ref. No. | Part No. | Qty. | Description |
|---|---|---|---|
| 28 | 55–7640–03 | 1 | Idler Arm ASM |
| 29 | 323–11 | 1 | Screw–HH |
| 30 | 94–2524 | 1 | Cover – Belt, RH |

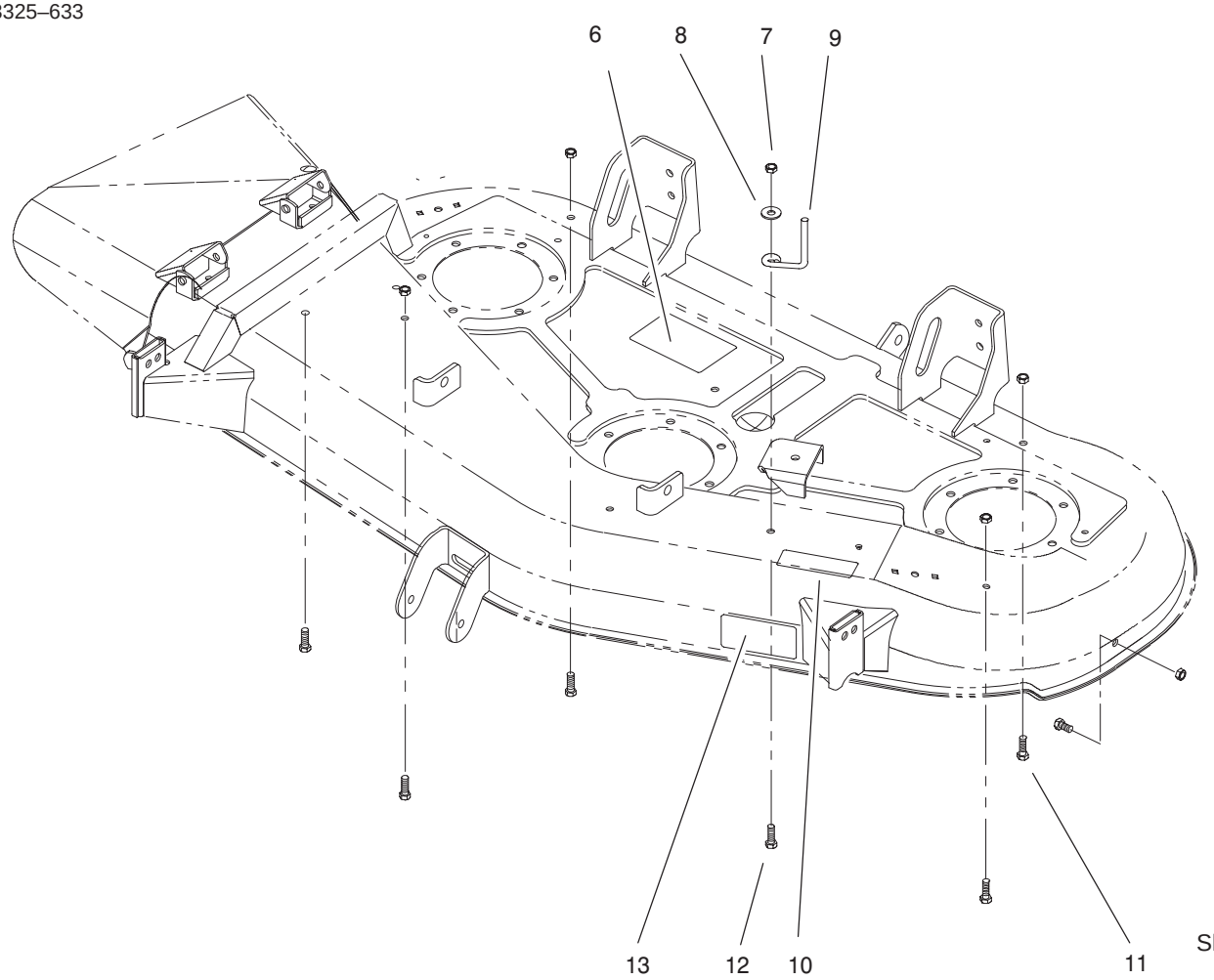


Sheet No.:5

# Decals & Baffles Assembly

| Ref. No. | Part No. | Qty. | Description |
|---|---|---|---|
| 6 | 94–4937 | 1 | Decal – Belt Routing |
| 7 | 3296–29 | 7 | Nut–Lock |
| 8 | 3256–23 | 1 | Washer–Flat |
| 9 | 94–2535 | 1 | Guide – Belt |
| 10 | 94–2543 | 1 | Decal – Belt Routing |
| 11 | 322–2 | 6 | Screw–HH |
| 12 | 322–5 | 1 | Screw–HH |
| 13 | 93–7282 | 1 | Decal–Wheel Adjustment |

| Ref. No. | Part No. | Qty. | Description |
|---|---|---|---|

# Maintenance Record

| Date | | | | | | | | |
|---|---|---|---|---|---|---|---|---|
| | | | | | | | | |
| | | | | | | | | |
| | | | | | | | | |


TORO®