Form No. 3325-649

TORO®

48 cm Recycler®

Walk Power Lawn Mower

Model No. 20818—210000001 and Up
Model No. 20819—210000001 and Up

Operator's Manual

Contents

	Page
Introduction	2
Safety	3
General Lawn Mower Safety	3
Safety and Instruction Decals	5
Assembly	6
Unpacking the Lawn Mower	6
Installing the Handle	6
Installing the Starter Rope	6
Adjusting the Handle Height	6
Before Starting	7
Filling the Crankcase with Oil	7
Filling the Fuel Tank with Gasoline	7
Operation	8
Controls	8
Starting the Engine	8
Stopping the Engine	9
Using the Self-propel Drive	9
Pulling the Lawn Mower Rearward	9
Adjusting the Cutting Height	9
Using the Grass Bag	10
Installing the Recycler Plug	11
Rear Discharge	12
Operating Tips	12
Maintenance	13
Recommended Maintenance Schedule	13
Checking the Engine Oil Level	14
Cleaning the Underside of the Lawn Mower Housing	14
Cleaning the Discharge Tunnel and the Recycler Plug	15
Replacing the Air Filter	15
Servicing the Spark Plug	15
Adjusting the Self-propel Drive Cable	15
Lubricating the Self-propel Drive	16
Changing the Engine Oil	16
Maintaining the Cutting Blade	17
Cleaning under the Belt Cover	18
Cleaning the Cooling System	19
Emptying the Fuel Tank	19
Storage	19
Preparing the Fuel System	19
Preparing the Engine	19
General Information	19
Folding the Handle	20
Removing from Storage	20
Troubleshooting	21
The Toro Total Coverage Guarantee	24

Introduction

Read this manual carefully to learn how to operate and maintain your product properly. The information in this manual can help you and others avoid injury and product damage. Although Toro designs and produces safe products, you are responsible for operating the product properly and safely.

Whenever you need service, genuine Toro parts, or additional information, contact an Authorized Service Dealer or Toro Customer Service and have the model and serial numbers of your product ready. Figure 1 illustrates the location of the model and serial numbers on the product.

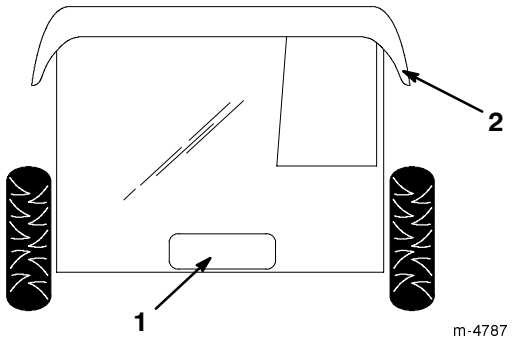

Figure 1

1. Location of the model and serial numbers
2. Rear door

Write the product model and serial numbers in the space below:

Model No. _____

Serial No. _____

This manual identifies potential hazards and has special safety messages that help you and others avoid personal injury and even death. ***Danger***, ***Warning***, and ***Caution*** are signal words used to identify the level of hazard. However, regardless of the hazard, be extremely careful.

Danger signals an extreme hazard that *will* cause serious injury or death if you do not follow the recommended precautions.

Warning signals a hazard that *may* cause serious injury or death if you do not follow the recommended precautions.

Caution signals a hazard that may cause minor or moderate injury if you do not follow the recommended precautions.

© 2000 by The Toro Company

8111 Lyndale Avenue South
Bloomington, MN 55420-1196

All Rights Reserved

Printed in the USA

This manual uses two other words to highlight information. **Important** calls attention to special mechanical information and **Note:** emphasizes general information worthy of special attention.

Safety

This lawn mower meets or exceeds the CPSC blade safety requirements for walk-behind rotary lawn mowers and the B71.1 specifications of the American National Standards Institute in effect at the time of production.

Improperly using or maintaining this lawn mower can result in injury. To reduce the potential for injury, comply with these safety instructions.

Toro designed and tested this lawn mower to offer reasonably safe service; however, *failure to comply with the following instructions may result in personal injury.*

Warning

Engine exhaust contains carbon monoxide, an odorless, deadly poison that can kill you.

Do not run the engine indoors or in an enclosed area.

To ensure maximum safety, best performance, and to gain knowledge of the product, it is essential that you and any other operator of the lawn mower read and understand the contents of this manual before the engine is ever started. Pay particular attention to the safety alert symbol ⚠ which means *caution*, *warning*, or *danger* — "personal safety instruction." Read and understand the instruction because it has to do with safety. Failure to comply with the instruction may result in personal injury.

General Lawn Mower Safety

The following instructions have been adapted from the ANSI/OPEI standard B71.1—1998 and ISO standard 5395:1990(E). Information or terminology specific to Toro lawn mowers is enclosed in parenthesis.

This lawn mower is capable of amputating hands and feet and of throwing objects. Failure to observe the following safety instructions could result in serious injury or death.

Training

- Read this operator's manual carefully. Be thoroughly familiar with the controls and the proper use of the lawn mower before starting it.
- Never allow children to operate the lawn mower. Local regulations may restrict the age of the operator.
- Never allow adults unfamiliar with these instructions to operate the lawn mower.
- Never mow while people (especially children) or pets are nearby. Stop the lawn mower if anyone enters the area.
- Tragic accidents can occur if the operator is not alert to the presence of children. Children are often attracted to the lawn mower and the mowing activity. Never assume that children will remain where you last saw them.
- Keep children out of the mowing area and under the watchful care of a responsible adult.
- Be alert and turn the lawn mower off if children enter the area.
- Use extra care when approaching blind corners, shrubs, trees, or other objects that may obscure vision.
- Keep in mind that the operator or user is responsible for accidents or hazards occurring to other people or their property.
- See the manufacturer's instructions for proper operation and installation of accessories. Use only the accessories that are approved by the manufacturer.

Preparation

- Thoroughly inspect the area where you will use the lawn mower, and remove all stones, sticks, wires, bones, and other foreign objects.
- While mowing, always wear substantial footwear and long trousers.
- Do not operate the lawn mower when barefoot or wearing open sandals.
- Always wear safety goggles or safety glasses with side shields when operating the lawn mower.
- Warning: Gasoline is highly flammable. Take the following precautions:
  - Store fuel in containers specifically designed for this purpose.
  - Refuel outdoors only and do not smoke while refuelling.
  - Add fuel before starting the engine. Never remove the cap of the fuel tank or add gasoline while the engine is running or when the engine is hot.
  - If gasoline is spilled, do not attempt to start the engine. Move the lawn mower away from the area of spillage to avoid creating any source of ignition until the gasoline vapors have dissipated.

- Replace all fuel tank and container caps securely.
- If you must drain the fuel from the fuel tank, do it outdoors.

- Replace faulty mufflers.
- Before using, always visually inspect the blades, blade bolts, and cutter assembly for wear or damage. Replace worn or damaged blades and bolts in sets to preserve balance.
- On multibladed lawn mowers, use care as rotating one blade can cause the other blades to rotate.

Operation

- Do not operate the engine in a confined space where dangerous carbon monoxide fumes can collect.
- Mow only in daylight or in good artificial light.
- Always be sure of your footing on slopes.
- Walk; never run.
- Keep a firm hold on the handle.
- For wheeled rotary lawn mowers, mow across the face of slopes, never up and down.
- Exercise extreme caution when changing the direction on slopes.
- Do not mow excessively steep slopes.
- Use extreme caution when reversing or pulling the lawn mower toward you.
- Before and while moving backward, look behind and down for small children.
- Stop the blade(s) if you must tilt the lawn mower for transportation when crossing surfaces other than grass and when transporting the lawn mower to and from the area to be mowed.
- Never operate the lawn mower with damaged or missing guards or shields, or without safety devices (such as deflectors and grass catchers) in place.
- Do not change the speed settings on the engine.
- Disengage all blade and drive clutches before starting the engine.
- Start the engine carefully according to instructions and with feet well away from the blade(s).
- Do not tilt the lawn mower when starting the engine, unless you must tilt the lawn mower to start it. In this case, do not tilt it more than absolutely necessary and lift only the part which is away from the operator.
- Do not start the engine when standing in front of the discharge chute.
- Do not put your hands or feet near or under rotating parts. Keep clear of the discharge opening at all times.
- Never pick up or carry a lawn mower while the engine is running.
- Stop the engine and disconnect the spark-plug wire:
  - before clearing blockages or unclogging the chute;
  - before checking, cleaning, or working on the lawn mower;
  - after striking a foreign object. Inspect the lawn mower for damage and make repairs before starting and operating the lawn mower; and
  - if the lawn mower starts to vibrate abnormally (check it immediately).
- Stop the engine:
  - whenever you leave the lawn mower; and
  - before refuelling.
- Reduce the throttle setting during engine run-out and, if the engine has a shutoff valve, turn the fuel off after mowing.
- Stop the blade(s) when crossing gravel drives, walks, or roads.
- Shut the engine off and wait until the blade comes to a complete stop before removing the grass catcher.
- Do not operate the lawn mower while under the influence of alcohol or drugs.
- If the lawn mower should start to vibrate abnormally, stop the engine and check immediately for the cause. Vibration is generally a warning of trouble.

Slopes are a major factor related to slip and fall accidents which can result in a severe injury. If you feel uneasy on a slope, do not mow it.

- Watch for holes, ruts, or bumps. Tall grass can hide obstacles.
- Do not mow near drop-offs, ditches, or embankments. You could lose your footing or balance.
- Do not mow on wet grass. Reduced footing could cause slipping.

Maintenance and Storage

- Keep all nuts, bolts (especially blade attachment bolts), and screws tight to ensure that the lawn mower is in safe working condition.
- Never store the lawn mower with gasoline in the tank inside a building where fumes may reach an open flame or spark.

- Allow the engine to cool before storing the lawn mower in any enclosure.
- To reduce the fire hazard, keep the engine, muffler, battery compartment, and gasoline storage area free of grass, leaves, or excessive grease.
- Check the grass catcher frequently for wear or deterioration.
- Replace worn or damaged parts.
- Use extra care when handling gasoline; gasoline vapors are explosive.
- Never tamper with safety devices. Check their proper operation regularly.
- Keep the lawn mower free of grass, leaves, or other debris buildup. Clean up any oil or fuel that spills.
- Stop and inspect the lawn mower if you strike an object. Repair the lawn mower, if necessary, before starting the engine.
- Never attempt to make wheel height adjustments while the engine is running.
- Grass catcher components are subject to wear, damage, and deterioration, which could expose moving parts or allow objects to be thrown. Frequently check the components and replace them with the manufacturer's recommended parts when necessary.
- Lawn mower blades are sharp and can cut. Wrap the blade(s) or wear gloves, and use extra caution when servicing them.
- Do not change the speed settings on the engine.
- If you must drain the fuel from the fuel tank, do it outdoors.
- To ensure the best performance and safety, purchase only genuine Toro replacement parts and accessories.
- Maintain or replace safety and instruction decals when necessary.

Safety and Instruction Decals



Safety decals and instructions are easily visible to the operator and are located near any area of potential danger. Replace any decal that is damaged or lost.

On Rear Door
(Part No. 93-4105)



Assembly

Note: Determine the left and right sides of the machine from the normal operating position.

Unpacking the Lawn Mower

1. Carefully remove the lawn mower from the box.

Warning

Folding or unfolding the handle improperly can pinch, stretch, or damage one or more of the cables. Any pinched, stretched, or damaged cable may cause an operational failure that results in an unsafe operating condition.

- **Do not pinch, stretch, or damage the cables.**
- **Handle the cables with care when folding or unfolding the handle.**
- **Do not use the lawn mower if one or more of the cables are pinched, stretched, or damaged. Contact your Authorized Service Dealer.**

2. Lay the upper handle on the ground behind the lawn mower with the handle label facing up.

Installing the Handle

1. Loosen the handle height adjustment knobs and rotate the lower handle toward the rear of the lawn mower until it seats into one of the handle height settings as shown in Figure 2. To set the handle height, refer to Adjusting the Handle Height on page 6.

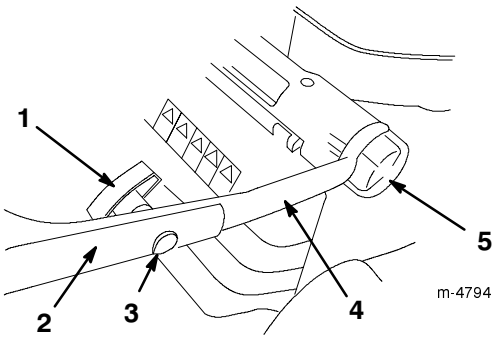

Figure 2

1. Handle knob (2)
2. Upper handle section
3. Oval-head bolt (2)
4. Lower handle section
5. Handle height adjustment knob (2)

2. Remove the handle knobs and the oval-head bolts from the upper handle section.

3. Install the upper handle section onto the lower handle section with the oval-head bolts and the handle knobs as shown in Figure 2. **Tighten the handle knobs securely.**

Note: Ensure that the cables and the electrical jacket are routed as illustrated in Figure 3.

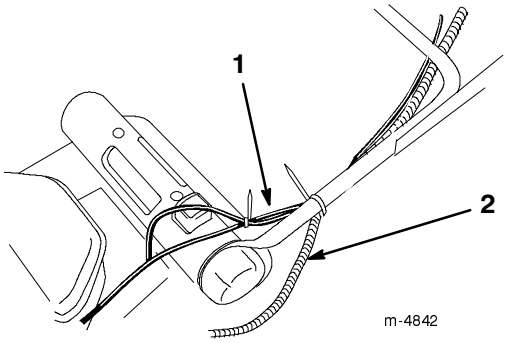

Figure 3

1. Cables
2. Electrical jacket

Installing the Starter Rope

Pull the starter rope through the rope guide on the handle (Fig. 4).

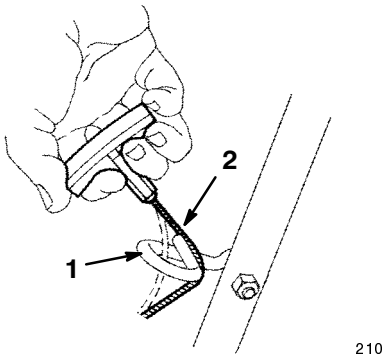

Figure 4

1. Rope guide
2. Starter rope

Adjusting the Handle Height

You can set the handle to three height settings: high, medium, and low (Fig. 2). Select the handle height setting most comfortable for you.

1. Loosen the handle height adjustment knobs.

2. Set the handle to the desired position.

3. Tighten the handle height adjustment knobs.

Before Starting

Filling the Crankcase with Oil

The crankcase can hold 20 ounces (0.59 liters) of oil. Use only high-quality, SAE 30 or SAE 10W30 weight detergent oil that has the American Petroleum Institute (API) service classification SF, SG, SH, or SJ.

Before each use, ensure that the oil level is between the *Add* and the *Full* marks on the dipstick (Fig. 5).

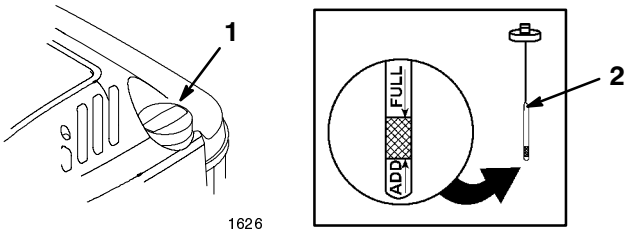

Figure 5

1. Oil fill cap
2. Dipstick

To add oil:

1. Move the lawn mower to a level surface.
2. Clean around the dipstick (Fig. 5).
3. Remove the dipstick by rotating the cap counterclockwise and pulling it out.
4. Wipe the dipstick clean with a clean cloth.
5. Fully insert the dipstick into the filler neck, then remove it.

Note: To ensure an accurate oil level reading, you must fully install the dipstick.

6. Read the oil level on the dipstick (Fig. 5).
7. If the oil level reading is below the *Add* mark on the dipstick, **slowly** pour only enough oil into the filler hole to raise the oil level to the *Full* mark on the dipstick.

Important Do not overfill the crankcase with oil and run the engine; engine damage will result. Drain the excess oil until the oil level on the dipstick reads *Full*.

8. Insert the dipstick into the filler neck and rotate the cap clockwise until it is tight.

Filling the Fuel Tank with Gasoline

For best results, use clean, fresh, lead-free gasoline, including *oxygenated* or *reformulated* gasoline, with an octane rating of 87 or higher. To ensure freshness, purchase only the quantity of gasoline that you expect to use in 30 days. Using unleaded gasoline results in fewer combustion deposits and longer engine life. You may use leaded gasoline if unleaded gasoline is not available.

Important Do not add oil to the gasoline.

Important Do not use methanol, gasoline containing methanol, gasohol containing more than 10% ethanol, premium gasoline, or white gas. Using these fuels can damage the engine's fuel system.

Important Do not use gasoline that is more than 30 days old.

Danger

In certain conditions, gasoline is extremely flammable and highly explosive. A fire or explosion from gasoline can burn you and others and can damage property.

- **Fill the fuel tank outdoors, in an open area, and when the engine is cold. Wipe up any gasoline that spills.**
- **Do not fill the fuel tank completely full. Add gasoline to the fuel tank until the level is 1/4 to 1/2 in. (6 to 13 mm) below the bottom of the filler neck. This empty space in the tank allows the gasoline to expand.**
- **Never smoke when handling gasoline, and stay away from an open flame or where a spark may ignite the gasoline fumes.**
- **Store gasoline in an approved fuel container and keep it out of the reach of children.**
- **Never buy more than a 30-day supply of gasoline.**

Danger

When fueling, under certain circumstances, a static charge can develop, igniting the gasoline. A fire or explosion from gasoline can burn you and others and damage property.

- **Always place gasoline containers on the ground and away from your vehicle before filling.**
- **Do not fill gasoline containers inside a vehicle or on a truck or trailer bed because interior carpets or plastic truck bed liners may insulate the container and slow the loss of any static charge.**
- **When practical, remove gasoline-powered equipment from the truck or trailer and refuel the equipment with its wheels on the round.**
- **If this is not possible, then refuel such equipment on a truck or trailer from a portable container, not from a gasoline dispenser nozzle.**
- **If you must use a gasoline dispenser nozzle, keep the nozzle in contact with the rim of the fuel tank or container opening at all times until fueling is complete.**

Use a fuel stabilizer/conditioner regularly during operation and storage. A stabilizer/conditioner cleans the engine during operation and prevents gum-like varnish deposits from forming in the engine during periods of storage.

Important Do not use fuel additives other than a fuel stabilizer/conditioner. Do not use fuel stabilizers with an alcohol base such as ethanol, methanol, or isopropanol.

1. Clean around the fuel tank cap (Fig. 6).

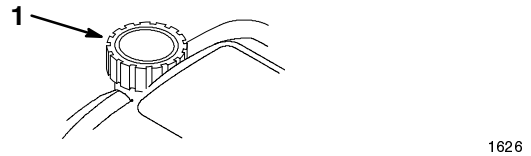

Figure 6

1. Fuel tank cap

2. Remove the cap from the tank.

3. Fill the fuel tank with unleaded gasoline to within 1/4 to 1/2 inch (6 to 13 mm) from the top of the tank. **Do not fill into the filler neck.**

4. Install the fuel tank cap and wipe up any spilled gasoline.

Operation

Note: Determine the left and right sides of the machine from the normal operating position.

Each time before you mow, ensure that the self-propel drive (self-propel model only) and the blade control bail operate properly. When you release the blade control bail, the engine and the self-propel drive should stop. If they do not, contact an Authorized Service Dealer.

Controls

The starter handle and the blade control bail are on the upper handle as shown in Figure 7.

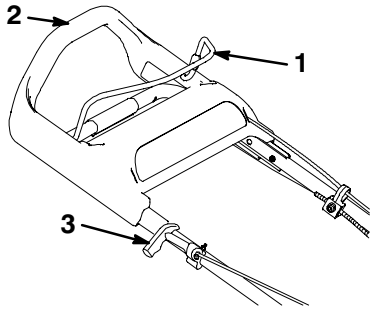

Figure 7

1. Blade control bail
2. Upper handle
3. Starter handle

Starting the Engine

1. Connect the wire to the spark plug (Fig. 8).

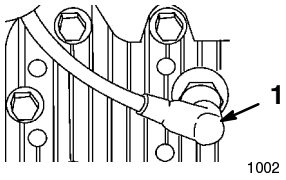

Figure 8

1. Spark plug wire

2. Push the primer three times, waiting two seconds between each push (Fig. 9).

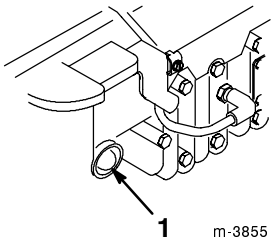

Figure 9

1. Primer

Note: If the temperature is 55°F (13°C) or below, push the primer five times, waiting two seconds between each push.

Note: Do not use the primer to start a warm engine after a brief shutdown. However, cool weather may require you to prime the engine again.

3. Hold the blade control bail against the upper handle (Fig. 10).

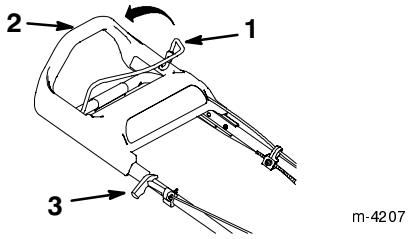

Figure 10

1. Blade control bail
2. Upper handle
3. Starter handle

---

4. Pull the starter handle lightly until you feel resistance, then pull it sharply (Fig. 10). Allow the rope return to the handle slowly.

Note: Allow the engine to warm up for at least one minute; longer in cooler temperatures.

Note: If the engine fails to start after three attempts, repeat steps 2 through 4.

Stopping the Engine

Release the blade control bail. Both the engine and the blade should stop. If they do not stop properly, contact an Authorized Service Dealer.

Using the Self-propel Drive

Self-propel Model only

To operate the self-propel drive, simply walk forward with your hands on the upper handle. As you move forward, the upper handle will slide toward the lawn mower, activating the self-propel drive. The faster you walk, the farther the handle will slide and the faster the lawn mower will propel (Fig. 11).

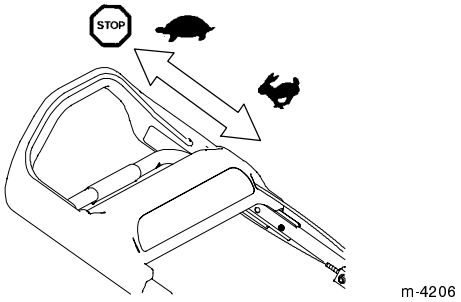

Figure 11

Note: The lawn mower propels at the maximum speed when you push in the upper handle as far forward as possible.

To slow down the drive, simply slow your walking speed; to stop the drive, stop walking (Fig. 11).

Pulling the Lawn Mower Rearward

Self-propel Model only

The lawn mower comes with free-wheeling clutches which make it easier to pull the lawn mower rearward.

When you approach an object (such as a tree or a bush) from which you want to pull back the lawn mower, stop pushing the upper handle when the lawn mower is about six inches (15 centimeters) away from the object. The momentum of the lawn mower should carry it forward at least one inch (2.5 centimeters) and disengage the clutches. You should then be able to easily pull the lawn mower rearward.

Adjusting the Cutting Height

The *SmartWheel™* has two cutting scales: *Sparse/Normal* and *Lush*—to ensure the best cutting height setting in any mowing condition (Fig. 12). Use the *Sparse/Normal* scale

during the warm summer season for the majority of your mowing. The *Lush* scale is for thick, moist, and succulent grass that grows most often in the spring.

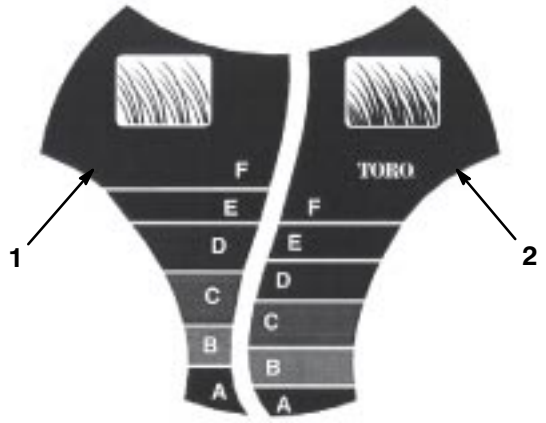

Figure 12

1. Sparse/normal grass cutting scale
2. Lush grass cutting scale

Toro recommends the following:

- Cut the grass at the *D*, *E*, or *F* settings or keep the grass between 2 to 3 inches (5.1 to 7.6 cm) high.
- Do not cut below the *D* setting unless the grass is sparse or it is late fall when grass growth begins to slow down. When you cut long grass, use a higher cutting height setting and walk slower; then cut the grass again at a normal setting. Mowing the grass when it is too long can plug the lawn mower and cause the engine to stall.

Note: The *SmartWheel* calculates the proper setting to ensure that you cut no more than a third of the grass blade.

1. Stop the engine and wait for all moving parts to stop.

2. Move the lawn mower into the grass; stop moving the lawn mower when the *SmartWheel* design on one of the rear wheels is upright (Fig. 12).

3. Use the *SmartWheel* design to compare the tips of the grass blades to the letters on the wheel. The letter on the *SmartWheel* that matches the tips of the grass blades is the proper cutting height.

4. Press down on the red button and hold the cutting height adjustment handle to move the cutting height up or down (Fig. 13).

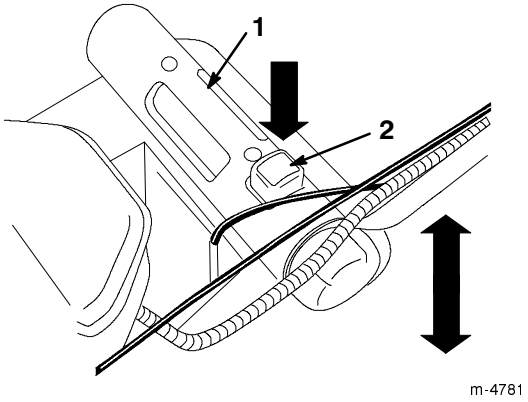

Figure 13

1. Cutting height adjustment handle
2. Red button

5. Lift up or press down on the handle, and use the pointer and the cutting height setting on the link rod to set the lawn mower to the desired cutting height (Fig. 14).

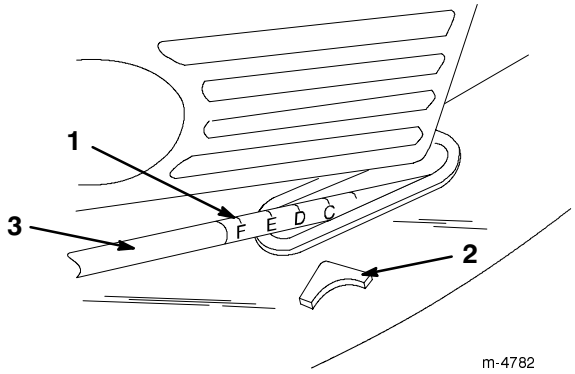

Figure 14

1. Cutting height setting
2. Pointer
3. Link rod

Using the Grass Bag

Occasionally, you may want to use the grass bag for bagging lush grass or collecting leaves.

Installing the Grass Bag

1. Stop the engine and wait for all moving parts to stop.

2. Open the rear door (Fig. 1).

3. Hold the spring-loaded rear door up to prevent it from closing.

4. Remove the recycler plug.
5. Hang the grass bag frame pins onto the deck hooks as shown in Figure 15.

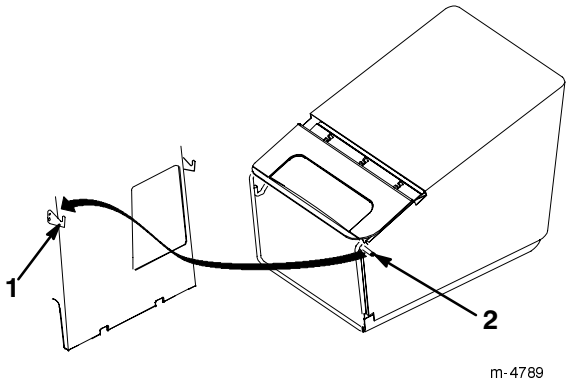

Figure 15

1. Deck hook (2)
2. Grass bag frame pin (2)

6. Release the rear door.

Mowing with the Grass Bag

Warning

A worn grass bag could allow small stones and other similar debris to be thrown in the operator's or bystander's direction and result in serious personal injury or death to the operator or bystanders.

Check the grass bag frequently. If it is damaged, install a new Toro replacement bag.

Cut the grass until the bag is full.

Important Do not overfill the bag.

Removing the Grass Bag

1. Stop the engine and wait for all moving parts to stop.

Danger

If the rear door does not close completely, the lawn mower could throw objects, causing serious personal injury or death.

If you cannot close the rear door because the grass clippings clog the discharge area, stop the engine, wait for all moving parts to stop, and remove the grass clippings (with a stick, not your hand) until the rear door closes completely.

2. Open the rear door (Fig. 1).
3. Hold the spring-loaded rear door up to prevent it from closing while you remove the grass bag.
4. Lift the grass bag frame pins off the deck hooks and out of the opening as shown in Figure 15.

Installing the Recycler Plug

1. Stop the engine and wait for all moving parts to stop.
2. Open the rear door (Fig. 1).
3. Hold the spring-loaded rear door up to prevent it from closing.
4. Insert the recycler plug into the opening as shown in Figure 16.

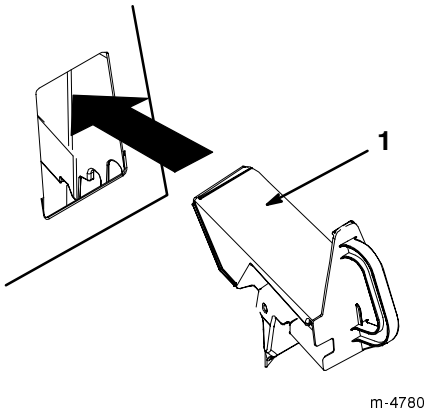

Figure 16

1. Recycler plug

5. Release the rear door.

Rear Discharge

Occasionally, you may need to cut the lawn without the grass bag or the recycler plug when the grass is too long for bagging.

To use the rear discharge feature, remove the recycler plug or the grass bag (refer to Removing the Grass Bag on page 11), and close the rear door.

Danger

If the rear door does not close completely, the lawn mower could throw objects, causing serious personal injury or death.

If you cannot close the rear door because the grass clippings clog the discharge area, stop the engine, wait for all moving parts to stop, and remove the grass clippings (with a stick, not your hand) until the rear door closes completely.

Operating Tips

- Review the safety instructions and read this manual carefully before operating the lawn mower.
- Clear the area of sticks, stones, wire, branches, and other debris that the blade could hit and throw.
- Keep everyone, especially children and pets, away from the area of operation.
- Avoid striking trees, walls, curbs, or other solid objects. Never deliberately mow over any object.
- If the lawn mower strikes an object or starts to vibrate, immediately stop the engine, disconnect the wire from the spark plug, and examine the lawn mower for damage.
- Maintain a *sharp blade* throughout the cutting season. Periodically file down nicks on the blade.
- Replace the blade when necessary with an original Toro replacement blade.
- Mow only dry grass or leaves. Wet grass and leaves tend to clump on the yard and can cause the lawn mower to plug or the engine to stall.

Warning

Wet grass or leaves can cause serious injury if you slip and contact the blade.

Mow only in dry conditions.

- Clean the underside of the lawn mower deck after each mowing. See Cleaning the Underside of the Lawn Mower Housing on page 14.
- Keep the engine in good running condition.

Warning

Operating a lawn mower with its engine running at a speed greater than the factory setting can cause the lawn mower to throw a part of the blade or engine into the operator's or bystander's area and result in serious personal injury or death.

- **Do not change the engine speed setting.**
- **If you suspect the engine speed is faster than normal, contact an Authorized Service Dealer.**

- Clean the air filter frequently. Mulching stirs up more clippings and dust which clogs the air filter and reduces engine performance.

Cutting Grass

- Grass grows at different rates at different times of the year. In the summer heat, it is best to cut grass at the *D*, *E*, or *F* (52, 63, or 75 mm) cutting height settings. Cut only about a third of the grass blade at a time. Do not cut below the *D* (52 mm) setting unless the grass is sparse or it is late fall when grass growth begins to slow down.
- When cutting grass over six inches (15 cm) tall, first mow using the rear discharge at the highest cutting height setting and walk slower; then mow again at a lower setting for the best lawn appearance. If the grass is too long and the leaves clump on top of the lawn, the lawn mower may plug and cause the engine to stall.
- Alternate the mowing direction. This helps disperse the clippings over the lawn for even fertilization.

If the finished lawn appearance is unsatisfactory, try one or more of the following:

- Sharpen the blade.
- Walk at a slower pace while mowing.
- Raise the cutting height on your lawn mower.
- Cut the grass more frequently.
- Overlap cutting swaths instead of cutting a full swath with each pass.

Cutting Leaves

- After cutting the lawn, ensure that half of the lawn shows through the cut leaf cover. You may need to make more than one pass over the leaves.
- Slow down your mowing speed if the lawn mower does not cut the leaves finely enough.
- If you mow over oak leaves, you can add lime to the grass in the spring to reduce the acidity of the oak leaves.

Maintenance

Note: Determine the left and right sides of the machine from the normal operating position.

Recommended Maintenance Schedule

Maintenance Service Interval	Maintenance Procedure
Each Use	• Check the engine oil level. • Check the stopping time of the blade brake. The blade must stop within three seconds of releasing the bail; if it does not, contact an Authorized Service Dealer for repair. • Remove grass clippings and dirt from under the housing. • Clean the discharge tunnel and the recycler plug.
5 Hours	• Check the blade and the engine mounting fasteners. Tighten them if they are loose.
25 Hours	• Replace the air filter. Replace it more frequently in dusty operating conditions. • Inspect the spark plug and replace it if necessary. • Adjust the self-propel drive cable and grease the rear axle fittings (Self-propel model only).
50 Hours	• Change the engine oil.[1] • Sharpen or replace the blade; maintain it more frequently if the edge dulls quickly in rough or in sandy conditions. • Check for leaks in the fuel system and/or a deteriorating fuel hose. Replace parts if necessary. • Remove grass clippings and debris from under the belt cover.
100 Hours	• Clean the cooling system.
Storage	• Empty the fuel tank before repairs as directed or before storage.

[1]Change the engine oil after the first five operating hours.

Important Refer to your engine operator's manual for additional maintenance procedures.

Caution

If you leave the wire on the spark plug, someone could accidently start the engine and seriously injure you or other bystanders.

Disconnect the wire from the spark plug before you do any maintenance. Set the wire aside so that it does not accidentally contact the spark plug.

Checking the Engine Oil Level

Before you use the lawn mower, make sure that the oil level between the *Add* and the *Full* marks as shown on the dipstick (Fig. 5). If the oil level is below the *Add* mark, add oil. Refer to Filling the Crankcase with Oil on page 7.

Cleaning the Underside of the Lawn Mower Housing

Keep the underside of the lawn mower housing clean. Be especially careful to keep the kickers free of debris (Fig. 17).

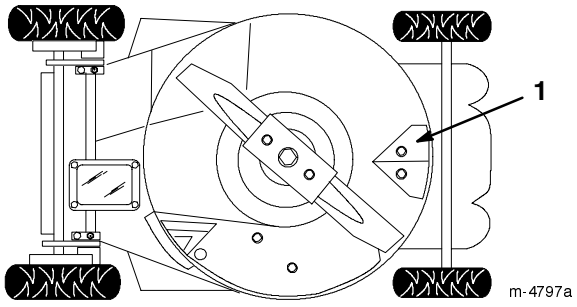

Figure 17

1. Kicker plate

Washing Method

1. With the engine off, move the lawn mower onto a flat surface near a garden hose.
2. Attach a quick disconnect coupling (sold separately) to the end of the garden hose.
3. Lift the rear door and attach the coupling to the lawn mower washout fitting on the recycling plug (Fig. 18).

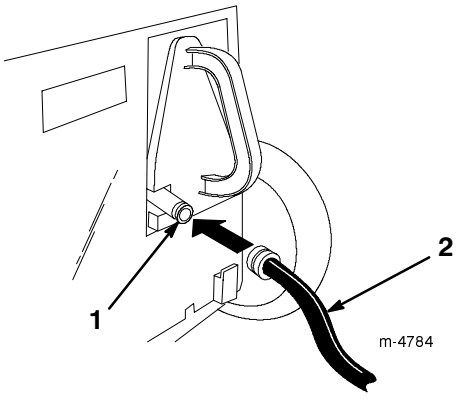

Figure 18

1. Washout fitting 2. Hose

4. Turn the water on high.
5. Start the engine.
6. Let the lawn mower run for two minutes.
7. Stop the engine and wait for all moving parts to stop.
8. Turn the water off.
9. Remove the coupling from the washout fitting.
10. Start the lawn mower and let it run for one minute to dry out the lawn mower and its components.

If the underside of the lawn mower deck has excessive grass buildup, repeat steps 2 through 8 above and do the following:

1. Let the lawn mower soak for 30 minutes.
2. Turn the water on high again.
3. Run the lawn mower for another two minutes.
4. Stop the engine and wait for all moving parts to stop.

Warning

A broken or missing washout fitting could expose you and others to thrown objects or to the blade, causing injury or death.

- **Replace a broken or missing washout fitting immediately before using the lawn mower again.**
- **Plug any hole(s) in the lawn mower with bolts and locknuts.**
- **Never put your hands or feet under the lawn mower or through openings in the lawn mower.**

Scraping Method

If washing does not remove all the debris from under the deck, tip the lawn mower and scrape it clean.

1. Disconnect the wire from the spark plug (Fig. 8).
2. Drain the gasoline from the fuel tank. Refer to steps 3 and 4 of Emptying the Fuel Tank on page 19.
3. Remove the grass bag.
4. Tip the lawn mower onto its **left** side (air filter up) (Fig. 17).
5. Remove the dirt and grass clippings with a hardwood or plastic scraper. Avoid burrs and sharp edges.

Important Move the blade as little as possible to avoid future starting problems.

6. Turn the lawn mower upright.
7. Fill the fuel tank.

8. Connect the wire to the spark plug.

Cleaning the Discharge Tunnel and the Recycler Plug

To ensure the best performance, clean the discharge tunnel and the recycler plug after each use. When the grass is thick and lush, clippings may collect on and around the recycler plug, making it difficult to remove.

Replacing the Air Filter

Replace the air filter every season or every 25 operating hours; replace it more frequently under dusty operating conditions.

Important Do not operate the engine without the air filter element; extreme engine damage will occur.

1. Stop the engine and wait for all moving parts to stop.
2. Disconnect the wire from the spark plug (Fig. 8).
3. Loosen the screw that secures the air cleaner cover (Fig. 19).
4. Tilt the cover down and clean it thoroughly (Fig. 19).

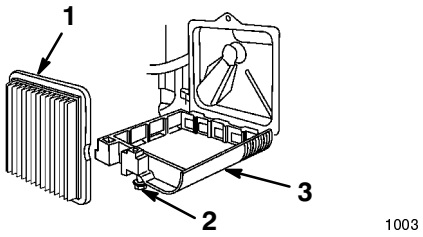

Figure 19

1. Air filter
2. Screw
3. Cover

5. Remove the paper air filter and discard it (Fig. 19).

Important Do not try to clean the paper air filter.

6. Insert a new paper air filter (Fig. 19).
7. Install the air filter cover and secure it with the screw.

Servicing the Spark Plug

Check the spark plug after every 25 operating hours. Use a *Champion RJ19LM* spark plug or equivalent.

1. Stop the engine and wait for all moving parts to stop.
2. Disconnect the wire from the spark plug (Fig. 8).
3. Clean around the spark plug.
4. Remove the spark plug from the cylinder head.

Important Replace the spark plug if it is cracked, fouled, dirty, or if the electrodes are worn or damaged. Do not clean the electrodes because grit entering the cylinder can cause engine damage.

5. Set the gap on the new plug to 0.030 in. (0.76 mm) (Fig. 20).

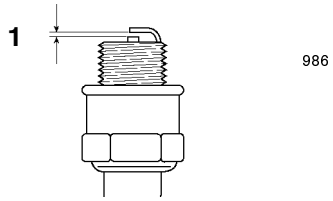

Figure 20

1. 0.030 in. (0.76 mm)

6. Install the spark plug and the gasket seal.
7. Torque the spark plug to 15 ft-lb (20 N·m).
8. Connect the wire to the spark plug.

Adjusting the Self-propel Drive Cable

Self-propel Model only

If the top speed begins to slow on the lawn mower, adjust the self-propel drive cable.

1. Stop the engine and wait for all moving parts to stop.
2. Pull the upper handle back as far as possible.
3. Loosen the cable support nut (Fig. 21).

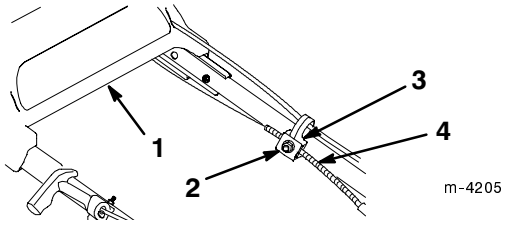

Figure 21

1. Upper handle
2. Nut
3. Cable support
4. Cable jacket

4. Remove the belt cover.

5. Push the belt guide tab down until it contacts the lawn mower, then hold it in place (Fig. 22).

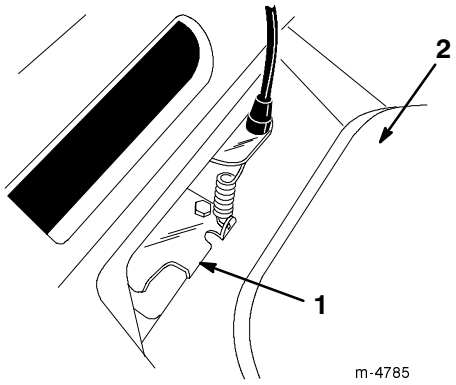

Figure 22

1. Belt guide tab 2. Engine

6. Pull the cable jacket down (toward the lawn mower) to remove all the slack in the cable (Fig. 21).

   Note: When you pull the cable jacket down, the handle may extend backward.

7. While holding the cable jacket in place, release the drive bracket and tighten the nut on the cable support (Fig. 21).

8. Install the belt cover.

Lubricating the Self-propel Drive

Self-propel Model only

After every 25 operating hours or at the end of the season, lubricate the rear wheels.

1. Wipe the grease fittings with a clean rag (Fig. 23).

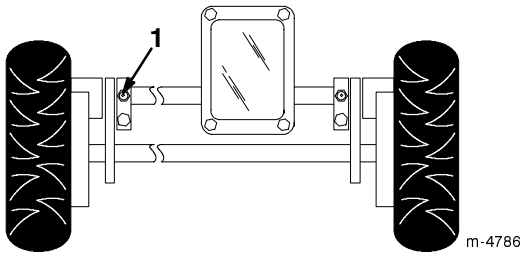

Figure 23

1. Grease fitting (2)

2. Install a grease gun onto each fitting and gently apply two or three pumps of *#2 multi-purpose lithium base grease*.

Important Applying grease using excess pressure may damage the seals.

Changing the Engine Oil

Change the oil after the first five operating hours and then after every 50 operating hours or every season. Run the engine just before changing the oil to warm the oil. Warm oil flows better and carries more contaminants.

Note: Change the oil after every 25 operating hours when operating under heavy load or in high temperatures.

Draining the Oil above the Lawn Mower Deck (Preferred Method)

1. Remove the grass bag.

2. Disconnect the wire from the spark plug (Fig. 8).

3. Drain the gasoline from the fuel tank; refer to steps 1 through 4 of Emptying the Fuel Tank on page 19.

4. Remove the dipstick from oil fill tube and place a drain pan next to the **left** side of the lawn mower.

5. Tip the lawn mower onto its **left** side (air filter up), allowing the oil to drain into the drain pan (Fig. 24).

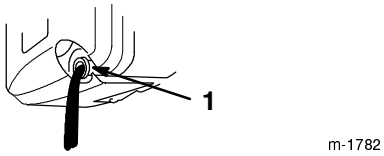

Figure 24

1. Oil fill tube

6. Turn the lawn mower upright.

7. Fill the crankcase with fresh oil to the *Full* mark on the dipstick. Refer to Filling the Crankcase with Oil on page 7.

8. Install the dipstick.

9. Wipe up any spilled oil.

10. Connect the wire to the spark plug.

11. Recycle the used oil according to local codes.

Draining the Oil below the Lawn Mower Deck (Optional Method)

Note: You need a 3/8-inch ratchet extension to perform this procedure.

Warning

The blade is sharp; contacting the blade can result in serious personal injury.

Wear gloves or wrap the sharp edges of the blade with a rag.

1. Disconnect the wire from the spark plug (Fig. 8).
2. Drain the gasoline from the tank; refer to steps 1 through 4 of Emptying the Fuel Tank on page 19.
3. Tip the lawn mower onto its **left** side (air filter up) and secure it to prevent it from falling.
4. Place a drain pan under the lawn mower.
5. Remove the oil drain plug, return the lawn mower to its operating position, and allow the oil to drain into the drain pan (Fig 25).

Note: Avoid spilling the oil on the belt.

Important You may need to move the blade to get to the oil drain plug. Move the blade as little as possible to avoid future starting problems.

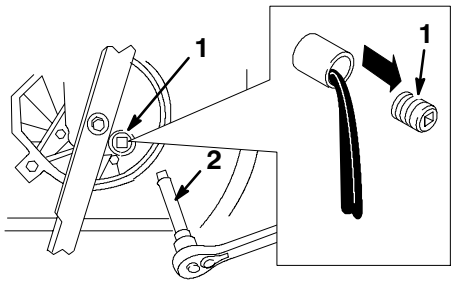

Figure 25

1. Oil drain plug
2. 3/8-inch Ratchet extension

6. Tip the lawn mower onto its left side (air filter up) and install the oil drain plug.
7. Move the oil drain pan from under the lawn mower and turn the lawn mower upright.
8. Fill the crankcase with fresh oil to the *Full* mark on the dipstick. Refer to Filling the Crankcase with Oil on page 7.
9. Install the dipstick.
10. Wipe up any spilled oil.
11. Connect the wire onto the spark plug.
12. Recycle the used oil according to local codes.

Maintaining the Cutting Blade

A straight, sharp blade provides maximum cutting performance. Regularly inspect and sharpen the blade.

Warning

The blade is sharp; contacting the blade can result in serious personal injury.

Wear gloves or wrap the sharp edges of the blade with a rag.

1. Disconnect the wire from the spark plug (Fig. 8).
2. Drain the gasoline from the fuel tank. Refer to steps 3 and 4 of Emptying the Fuel Tank on page 19.
3. Tip the lawn mower onto its **left** side (air filter up) (Fig. 26).

Important Move the blade as little as possible to avoid future starting problems.

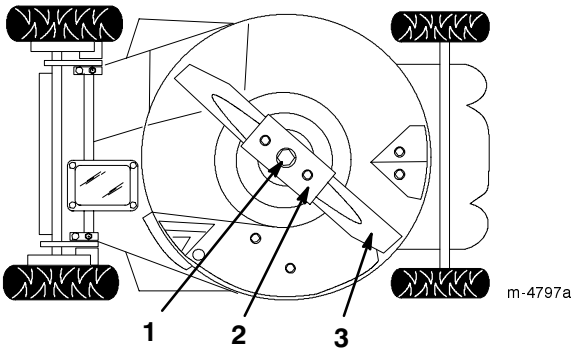

Figure 26

1. Blade bolt and lock washer
2. Blade stiffener
3. Blade

Inspecting the Blade

Carefully examine the blade for sharpness and wear, especially where the flat and the curved parts meet (Fig. 27A). Because sand and abrasive material can wear away the metal that connects the flat and curved parts of the blade, check the blade before using the lawn mower. If you notice a slot or wear (Figs. 27B and 27C), replace the blade; refer to Removing the Blade on page 18.

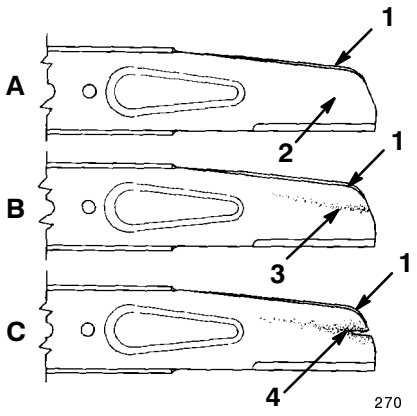

Figure 27

1. Sail
2. Flat part of blade
3. Wear
4. Slot formed

Note: For the best performance, install a Toro new blade before the cutting season begins. During the year, file down any small nicks to maintain the cutting edge.

Danger

A worn or damaged blade can break, and a piece of the blade could be thrown into the operator's or bystander's area, resulting in serious personal injury or death.

- **Inspect the blade periodically for wear or damage.**
- **Replace a worn or damaged blade.**

Removing the Blade

Warning

Operating the lawn mower without the blade stiffner in place can cause the blade to flex, bend, or break, resulting in serious injury or death to the operator or bystanders.

Do not operate the lawn mower without the blade stiffener.

1. Grasp the end of the blade using a rag or a thickly padded glove.
2. Remove the blade bolt, the lock washer, the blade, and the blade stiffener (Fig. 26).

Note: Turn the blade bolt counterclockwise to loosen it.

Sharpening the Blade

File the top side of the blade to maintain its original cutting angle (Fig. 28A) and inner cutting edge radius (Fig. 28B). The blade will remain balanced if you remove the same amount of material from both cutting edges.

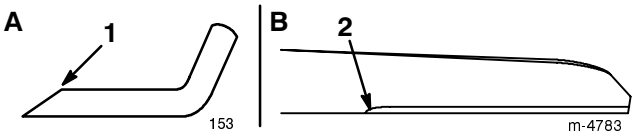

Figure 28

1. Sharpen at this angle only
2. Maintain the original radius here

Balancing the Blade

1. Check the balance of the blade by placing the center hole of the blade over a nail or a screwdriver shank clamped horizontally in a vise (Fig. 29).

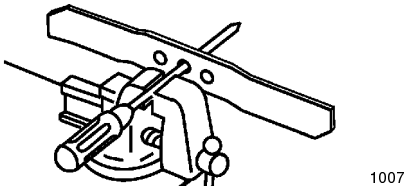

Figure 29

Note: You can also check the balance by using a commercially manufactured blade balancer.

2. If either end of the blade rotates downward, file that end (not the cutting edge or the end near the cutting edge). The blade is properly balanced when neither end drops.

Installing the Blade

1. Install a sharp, balanced Toro blade, the blade stiffener, the lock washer, and the blade bolt.

Note: The sail part of the blade must point upward (toward the top of the lawn mower housing).

2. Torque the blade bolt to 45 to 60 ft-lb (33 to 44 N·m).
3. Connect the wire to the spark plug.

Cleaning under the Belt Cover

Self-propel Model only

Keep the area under the belt cover free of debris.

1. Stop the engine and wait for all moving parts to stop.

2. Lift off the cover and brush out all the debris from the belt area.
3. Install the belt cover.

Cleaning the Cooling System

After every 100 operating hours or every season, clean the dirt and the chaff from the cylinder, the cylinder head fins, and around the carburetor and the linkage. Remove debris from the air intake slots on the recoil housing. This will ensure proper cooling and the best engine performance.

Emptying the Fuel Tank

1. Stop the engine and wait for it to cool down.
2. Disconnect the wire from the spark plug (Fig. 8).
3. Remove the cap from the fuel tank (Fig. 5).
4. Use a hand pump to syphon the fuel into a clean approved gasoline container.
5. Connect the wire to the spark plug.
6. Run the engine until it stops.
7. Start the engine again to make sure that all the gasoline is out of the carburetor.

Storage

To prepare the lawn mower for off-season storage, perform the recommended maintenance procedures. Refer to *Maintenance* on page 13.

Store the lawn mower in a cool, clean, dry place. Cover the lawn mower to keep it clean and protected.

Preparing the Fuel System

Warning

Gasoline can vaporize if you store it over long periods of time and explode if it comes into contact with an open flame.

- **Do not store gasoline over long periods of time.**
- **Do not store the lawn mower with gasoline in the fuel tank or the carburetor in an enclosure with an open flame. (For example, a furnace or a water heater pilot light.)**
- **Allow the engine to cool before storing it in any enclosure.**

Empty the fuel tank when mowing the last time before storing the lawn mower.

1. Run the lawn mower until the engine stops from running out of fuel.
2. Prime the engine and start it again.
3. Allow the engine to run until it stops. When you can no longer start the engine, it is sufficiently dry.

Preparing the Engine

1. While the engine is still warm, change the oil from the crankcase. Refer to Changing the Engine Oil on page 16.
2. Remove the spark plug (Fig. 8).
3. Using an oil can, add about one tablespoon of oil to the crankcase through the spark plug hole.
4. Slowly rotate the engine several times, using the starter rope, to distribute the oil.
5. Install the spark plug but **do not** connect the wire to the spark plug.

General Information

1. Clean the lawn mower housing. Refer to Cleaning the Underside of the Lawn Mower Housing on page 14.
2. Clean any dirt and chaff from the cylinder, cylinder head fins, and blower housing.

3. Remove grass clippings, dirt, and grime from the external parts of the engine, the shrouding, and the top of the lawn mower housing.
4. Check the condition of the blade. Refer to Maintaining the Cutting Blade on page 17.
5. Service the air filter; refer to Replacing the Air Filter on page 15.
6. Lubricate the wheels (self-propel model only); refer to Lubricating the Self-Propel Drive on page 16.
7. Tighten all nuts, bolts, and screws.
8. Touch up all rusted or chipped paint surfaces with paint available from an Authorized Service Dealer.

Folding the Handle

Warning

Folding or unfolding the handle improperly can pinch, stretch, or damage one or more of the cables. Any pinched, stretched, or damaged cable may cause an operational failure that results in an unsafe operating condition.

- **Do not pinch, stretch, or damage the cables.**
- **Handle the cables with care when folding or unfolding the handle.**
- **Do not use the lawn mower if one or more of the cables are pinched, stretched, or damaged. Contact your Authorized Service Dealer.**

1. Loosen the handle height adjustment knobs that secure the handle to the lawn mower.
2. Loosen the knobs that secure the upper handle section to the lower handle section.
3. Carefully swing the lower handle section forward until it rests on the engine (Fig. 30).

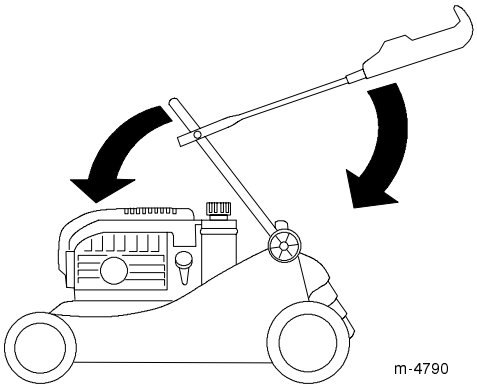

Figure 30

4. Carefully swing the upper handle section rearward until it rests flat (Fig. 30).

Removing from Storage

Warning

Folding or unfolding the handle improperly can pinch, stretch, or damage one or more of the cables. Any pinched, stretched, or damaged cable may cause an operational failure that results in an unsafe operating condition.

- **Do not pinch, stretch, or damage the cables.**
- **Handle the cables with care when folding or unfolding the handle.**
- **Do not use the lawn mower if one or more of the cables are pinched, stretched, or damaged. Contact your Authorized Service Dealer.**

1. Carefully unfold the upper handle until it nests with the lower handle, then tighten the knobs.
2. Check and tighten all fasteners.
3. Remove the spark plug (Fig. 8) and spin the engine rapidly using the starter to remove the excess oil from the cylinder.
4. Clean the spark plug or replace it if it is cracked, broken, or if the electrodes are worn.
5. Install the spark plug and torque it to 15 ft-lb (20 N·m).
6. Perform the recommended maintenance procedures; refer to Maintenance on page 13.
7. Fill the fuel tank (Fig. 5) with fresh gasoline.
8. Check the engine oil level. Refer to Checking the Engine Oil Level on page 14.
9. Connect the wire to the spark plug.

Troubleshooting

Toro designed and built your lawn mower for trouble-free operation. Check the following components and items carefully, and refer to Maintenance on page 13 for more information. If a problem continues, contact an Authorized Service Dealer.

Problem	Possible Causes	Corrective Action
Engine does not start	1. The fuel tank is empty or the fuel system contains stale fuel.	1. Drain and/or fill the fuel tank with fresh gasoline. If the problem persists, contact an Authorized Service Dealer.
	2. The primer has not been pushed in.	2. Push the primer in three times.
	3. The wire is not connected to the spark plug.	3. Connect the wire to the spark plug.
	4. The spark plug is pitted, fouled, or the gap is incorrect.	4. Check the spark plug and adjust the gap if necessary. Replace the spark plug if it is pitted, fouled, or cracked.
Engine starts hard or loses power	1. The fuel tank contains stale fuel.	1. Drain and fill the fuel tank with fresh gasoline.
	2. The fuel cap vent hole is plugged.	2. Clean the fuel cap vent hole or replace the fuel cap.
	3. The air filter element is dirty and is restricting the air flow.	3. Clean the air filter.
	4. The underside of the lawn mower deck contains clippings and debris.	4. Clean the underside of the lawn mower deck.
	5. The spark plug is pitted, fouled, or the gap is incorrect.	5. Check the spark plug and adjust the gap if necessary. Replace the spark plug if it is pitted, fouled, or cracked.
	6. The engine oil level is low or the oil is dirty.	6. Check the engine oil. Change the oil if it is dirty or add oil if it is low.
Engine runs rough	1. The wire is not connected to the spark plug.	1. Connect the wire to the spark plug.
	2. The spark plug is pitted, fouled, or the gap is incorrect.	2. Check the spark plug and adjust the gap if necessary. Replace the spark plug if it is pitted, fouled, or cracked.
	3. The air filter element is dirty and is restricting the air flow.	3. Clean the air filter.
Lawn mower or engine vibrates excessively	1. The blade is bent or is out of balance.	1. Balance the blade. If the blade is bent, replace it.
	2. The blade bolt is loose.	2. Tighten the blade bolt.
	3. The underside of the lawn mower deck contains clippings and debris.	3. Clean the underside of the lawn mower deck.
	4. The engine mounting bolts are loose.	4. Tighten the engine mounting bolts.

Problem	Possible Causes	Corrective Action
Uneven cutting pattern	1. The blade is dull. 2. You are mowing in the same pattern repeatedly. 3. The underside of the lawn mower deck contains clippings and debris.	1. Sharpen and balance the blade. 2. Change the mowing pattern. 3. Clean the underside of the lawn mower deck.
Discharge chute plugs	1. The cutting height is too low. 2. You are mowing too fast. 3. The grass is wet. 4. The underside of the lawn mower deck contains clippings and debris.	1. Raise the cutting height. 2. Slow down. 3. Allow the grass to dry before mowing. 4. Clean the underside of the lawn mower deck.
Lawn mower does not self-propel (Self-propel model only)	1. The self-propel drive cable is out of adjustment or is damaged. 2. There is debris under the belt cover.	1. Adjust the self-propel drive cable. Replace the cable if necessary. 2. Clean the debris from under the belt cover.

Gas, Cordless, Electric, and 21″ Commercial Duty Walk Mowers

The Toro Total Coverage Guarantee

A Full Warranty
(Limited Warranty for Commercial Use)

Conditions and Products Covered

The Toro Company and its affiliate, Toro Warranty Company, pursuant to an agreement between them, jointly promise to repair any Toro Product used for normal residential purposes* if defective in materials or workmanship or if it stops functioning due to the failure of a component. The following time periods apply from the date of purchase:

Products	Warranty Period
• Super Recycler® Walk Mowers	5 year full warranty
• VacuPower® Walk Mowers	5 year full warranty
• All Other Mowers	2 year full warranty
• All Batteries	1 year full warranty

This warranty includes the cost of parts and labor, but you must pay transportation costs.

This warranty applies to all gas, cordless, and electric consumer walk power mowers.

* Normal residential purposes means use of the product on the same lot as your home. Use at more than one location is considered commercial use, and the commercial use warranty would apply.

Limited Warranty for Commercial Use

Toro Walk Power Mowers used for commercial, institutional, or rental use are warranted against defects in materials or workmanship. Components failing due to normal wear are not covered by this warranty. The following time periods apply from the date of purchase:

Products	Warranty Period	
	Engine	Entire Unit
• 21″ Commercial Duty Walk Mowers	2 year limited	1 year limited
• All Other Mowers	45 day limited	45 day limited

Instructions for Obtaining Warranty Service

Should you feel your Toro Product contains a defect in materials or workmanship, contact the dealer who sold you the product or any Authorized Service Dealer or Master Service Dealer. The Yellow Pages of your telephone directory is a good reference source. The dealer will either arrange service at his/her dealership or recommend another Authorized Service Dealer who may be more convenient. You may need proof of purchase (copy of registration card, sales receipt, etc.) for warranty validation.

If for any reason you are dissatisfied with the Service Dealer's analysis of the defect in materials or workmanship or if you need a referral to a Toro Service Dealer, please feel free to contact us at:

Customer Service Department
Toro Warranty Company
8111 Lyndale Avenue South
Bloomington, MN 55420-1196
952-888-8801 or 800-421-9684

Owner Responsibilities

You must maintain your Toro Product by following the maintenance procedures described in the operator's manual. Such routine maintenance, whether performed by a dealer or by you, is at your expense.

Items and Conditions Not Covered

There is no other express warranty except for special emission system coverage on some products and the Toro Starting Guarantee on GTS Engine. This express warranty does not cover:

- Cost of regular maintenance service or parts, such as filters, fuel, lubricants, oil changes, spark plugs, blade sharpening, worn blade, cable/linkage adjustments, or brake and clutch adjustments.
- Any product or part which has been altered or misused or required replacement or repair due to accidents or lack of proper maintenance.
- Repairs necessary due to improper fuel, contaminants in the fuel system, or failure to properly prepare the fuel system prior to any period of non-use over three months.
- Repairs necessary due to improper battery care, electrical supply irregularities, or failure to properly prepare the mower prior to any period of non-use.
- Pickup and delivery charges.

All repairs covered by this warranty must be performed by an Authorized Toro Service Dealer using Toro approved replacement parts.

General Conditions

Repair by an Authorized Toro Service Dealer is your sole remedy under this warranty.

Neither The Toro Company nor Toro Warranty Company is liable for indirect, incidental or consequential damages in connection with the use of the Toro Products covered by this warranty, including any cost or expense of providing substitute equipment or service during reasonable periods of malfunction or non-use pending completion of repairs under this warranty. Some states do not allow exclusions of incidental or consequential damages, or limitations on how long an implied warranty lasts, so the above exclusions and limitations may not apply to you.

This warranty gives you specific legal rights, and you may also have other rights which vary from state to state.

Countries Other than the United States or Canada

Customers who have purchased Toro products exported from the United States or Canada should contact their Toro Distributor (Dealer) to obtain guarantee policies for your country, province, or state. If for any reason you are dissatisfied with your Distributor's service or have difficulty obtaining guarantee information, contact the Toro importer. If all other remedies fail, you may contact us at Toro Warranty Company.

Part No. 374-0000 Rev. -