FORM NO. 3310-583

TORO®

MODEL NO. 20440 - 400001 & UP
MODEL NO. 20550 - 400001 & UP
MODEL NO. 20660 - 400001 & UP

# PARTS CATALOG

## 21" H.P. and S.P. GRASSMASTER

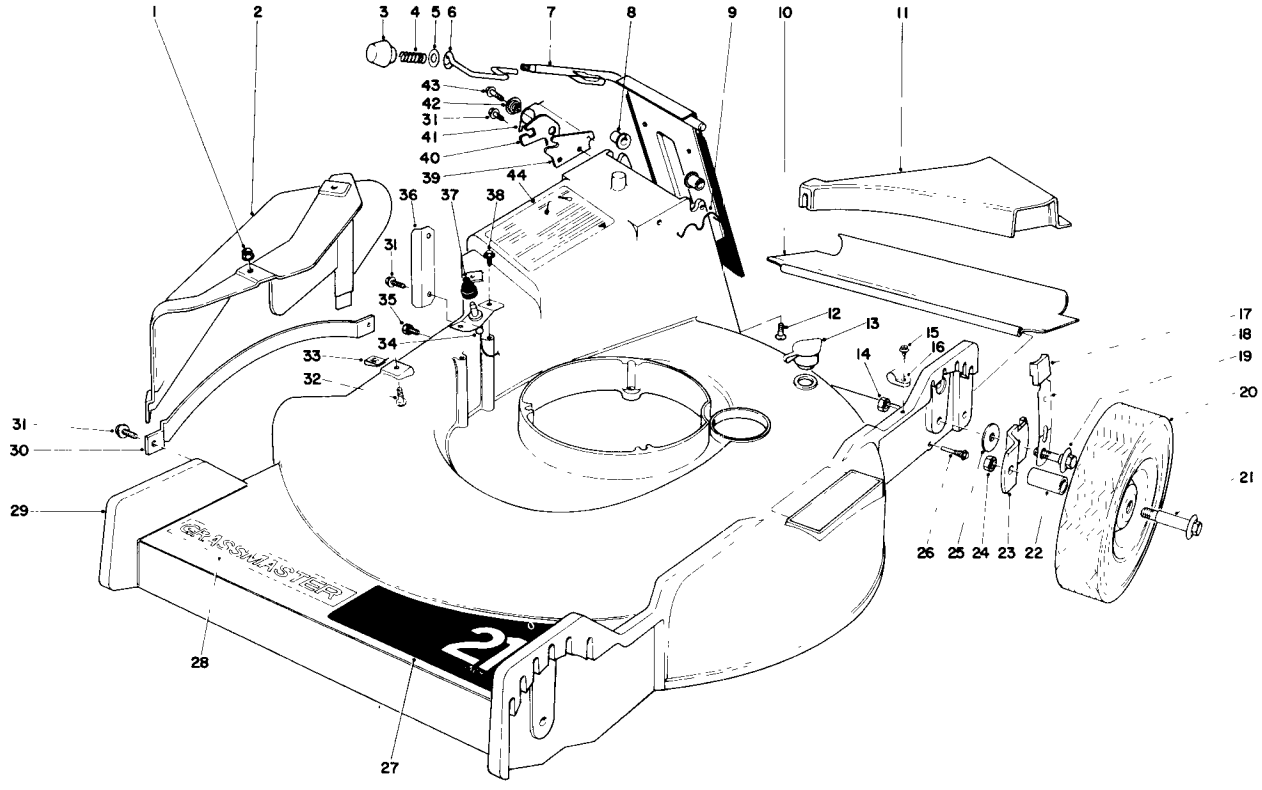


## HOUSING ASSEMBLY MODEL NO. 20440

| Ref. No. | Part No. | Description | No. Used |
|---|---|---|---|
| 1 | 32128-14 | Flange Nut | 2 |
| 2 | 23-0180 | Deflector | 1 |
| 3 | 233-37 | Knob | 1 |
| 4 | 23-0920 | Spring-Compression | 1 |
| 5 | 23-1120 | Washer | 1 |
| 6 | 23-0940 | Latch Door | 1 |
| 7 | 23-0990 | Door Handle | 1 |
| 8 | 23-0880 | Bushing | 2 |
| 9 | 23-0200 | Door Retainer | 1 |
| 10 | 23-0560 | Rear Safety Shield | 1 |
| 11 | 23-0360 | Insert Rear | 1 |
| 12 | 32144-17 | Screw Flat Hd. | 2 |
| 13 | 6-4500 | Washout Plug | 1 |
| 14 | 32146-5 | Locknut | 4 |
| 15 | 32104-76 | Screw | 1 |
| 16 | 2412-51 | Cable Clamp | 1 |
| 17 | 6-6230 | Knob Arm | 2 |

| Ref. No. | Part No. | Description | No. Used |
|---|---|---|---|
| * | 6-6220 | Knob Arm | 2 |
| 18 | 23-0400 | Spring Arm | 4 |
| 19 | 12-2440 | Pivot Screw | 4 |
| 20 | 17-4120 | Wheel & Tire Assembly | 4 |
| 21 | 3-2652 | Wheel Bolt | 4 |
| 22 | 17-4560 | Wheel Bushing | 4 |
| 23 | 20-3190 | Pivot Arm | 4 |
| 24 | 32146-12 | Locknut | 4 |
| 25 | 5-4460 | Pivot Washer | 4 |
| 26 | 8-6160 | Pivot Screw | 2 |
| 27 | 23-0870 | Decal | 1 |
| 28 | 23-0930 | Decal Grassmaster | 1 |
| 29 | 6-1799 | Housing | 1 |
| 30 | 23-0210 | Safety Bar | 1 |
| 31 | 12-3270 | Screw | 4 |
| 32 | 3290-133 | Screw Round Head | 2 |
| 33 | 3290-199 | Speed Nut | 2 |

*Not Illustrated

Copyright 1974 by
The Toro Company
Bloomington, Minnesota 55420 U.S.A.

Price $1.00

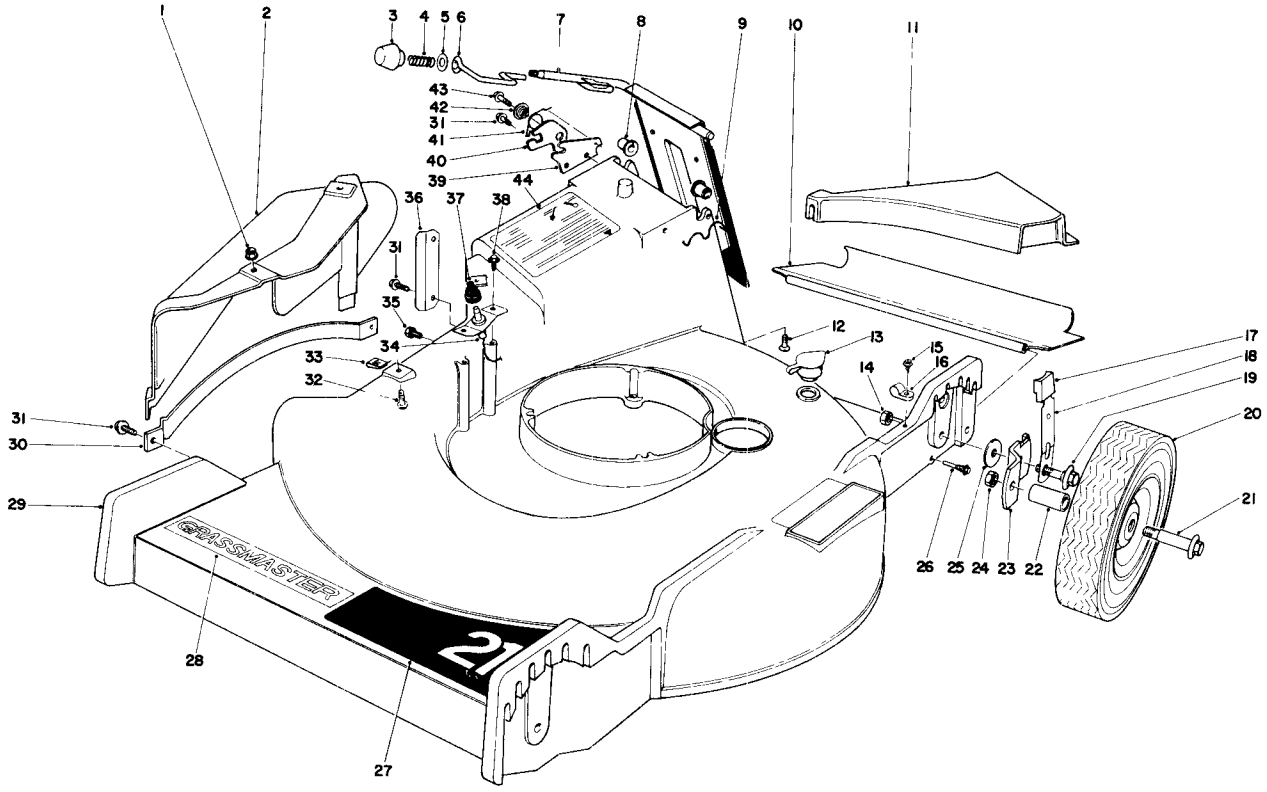


# HOUSING ASSEMBLY MODEL NO. 20440 (Continued)

| Ref. No. | Part No. | Description | No. Used |
|---|---|---|---|
| 34 | 23-0150 | Deflector Switch Assembly (Incl. Ref. # 37) | 1 |
| 35 | 32104-114 | Screw Self Tapping | 1 |
| 36 | 23-0140 | Clip - Retaining | 1 |
| 37 | 12-4930 | Boot Switch | 1 |
| 38 | 32144-12 | Screw | 2 |

| Ref. No. | Part No. | Description | No. Used |
|---|---|---|---|
| 39 | 23-1040 | Latch Plate | 1 |
| 40 | 23-1190 | Latch - Safety | 1 |
| 41 | 23-1200 | Torsion Spring | 1 |
| 42 | 23-1180 | Spacer - Latch | 1 |
| 43 | 11-9760 | Screw Thread Forming | 1 |
| 44 | 23-1280 | Decal - Caution | 1 |
| * | 23-0720 | Loose Parts Bag | 1 |

*Not Illustrated

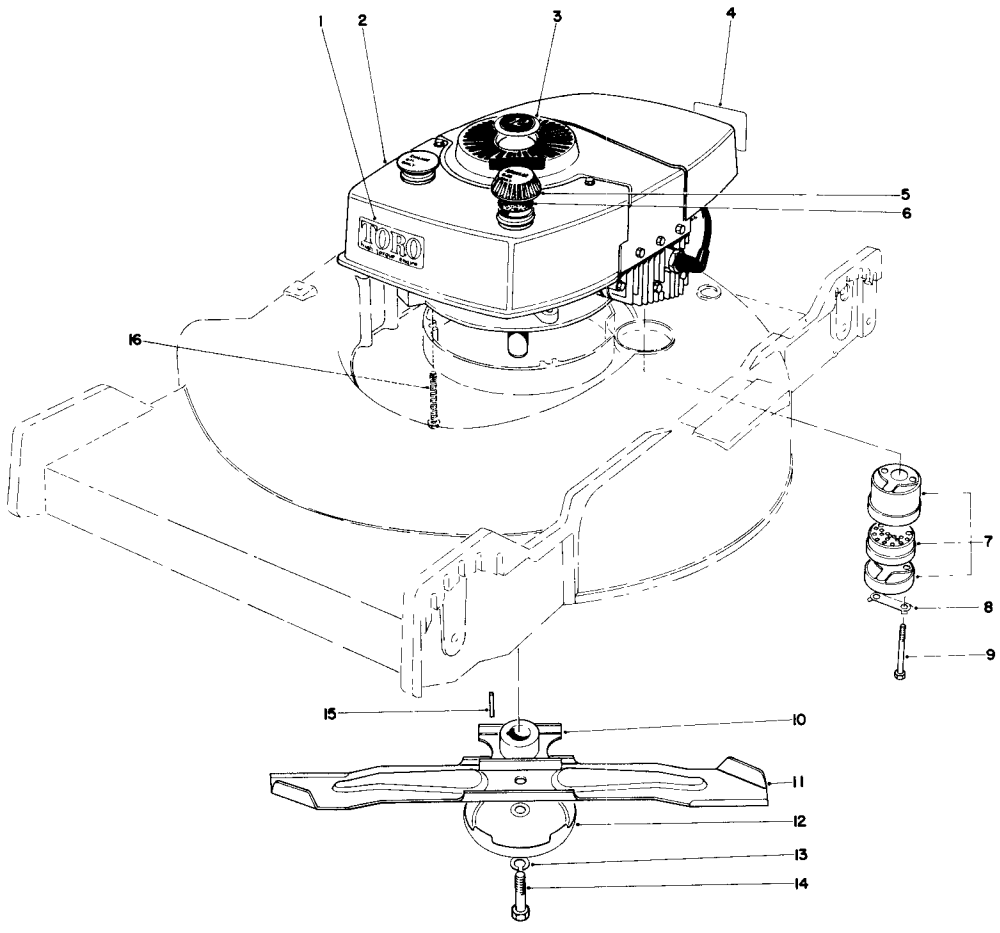


# ENGINE ASSEMBLY MODEL NO. 20440

| Ref. No. | Part No. | Description | No. Used |
|---|---|---|---|
| 1 | 23-1260 | Decal High Torque | 1 |
| 2 | 221-465 | Engine | 1 |
| 3 | 23-0600 | Plug Button | 1 |
| 4 | 20-2710 | Decal - Maintenance | 1 |
| 5 | 22-4790 | Gas Cap (Incl. Ref. # 6) | 1 |
| 6 | 5-2044 | Gasket | 1 |
| 7 | 5-4769 | Muffler Assembly | 1 |
| 8 | 3-5094 | Locking Clip | 1 |

| Ref. No. | Part No. | Description | No. Used |
|---|---|---|---|
| 9 | 321-20 | Screw Hex. Hd. | 2 |
| 10 | 23-0110 | Blade Retainer | 1 |
| 11 | 23-0070 | Blade | 1 |
| 12 | 8-4240 | Anti - Scalp Cup | 1 |
| 13 | 3253-22 | Lockwasher | 1 |
| 14 | 23-0080 | Screw Blade | 1 |
| 15 | 6-8590 | Key | 1 |
| 16 | 11-0580 | Screw | 3 |

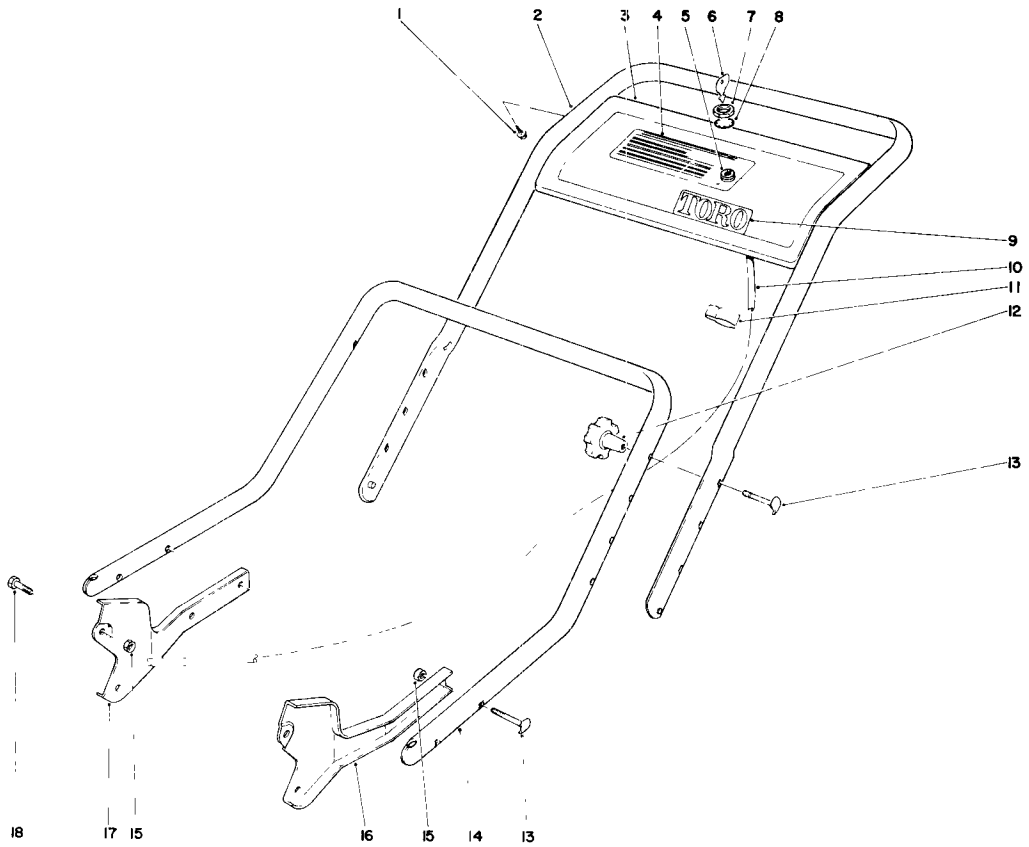


# HANDLE ASSEMBLY MODEL NO. 20440

| Ref. No. | Part No. | Description | No. Used |
|---|---|---|---|
| 1 | 32104-76 | Screw Self Tapping | 4 |
| 2 | 23-0580 | Upper Handle | 1 |
| 3 | 23-0490 | Control Plate | 1 |
| 4 | 23-0760 | Decal - Control Plate | 1 |
| 5 | 23-0650 | On - Off Switch | 1 |
| 6 | 218-412 | Key (Set of 2) | 1 |
| 7 | 218-461 | Hex Nut | 1 |
| 8 | 3254-5 | Lockwasher | 1 |
| 9 | 23-0800 | Decal Toro | 1 |

| Ref. No. | Part No. | Description | No. Used |
|---|---|---|---|
| 10 | 23-0820 | Wiring Harness | 1 |
| 11 | 218-465 | Clip Conduit | 1 |
| 12 | 19-4050 | Knob Handle Release | 2 |
| 13 | 6-6330 | Handle Screw | 6 |
| 14 | 20-9820 | Lower Handle | 1 |
| 15 | 32146-5 | Nut | 8 |
| 16 | 23-0430 | Latch Handle L.H. | 1 |
| 17 | 23-0420 | Latch Handle R.H. | 1 |
| 18 | 322-4 | Capscrew | 4 |

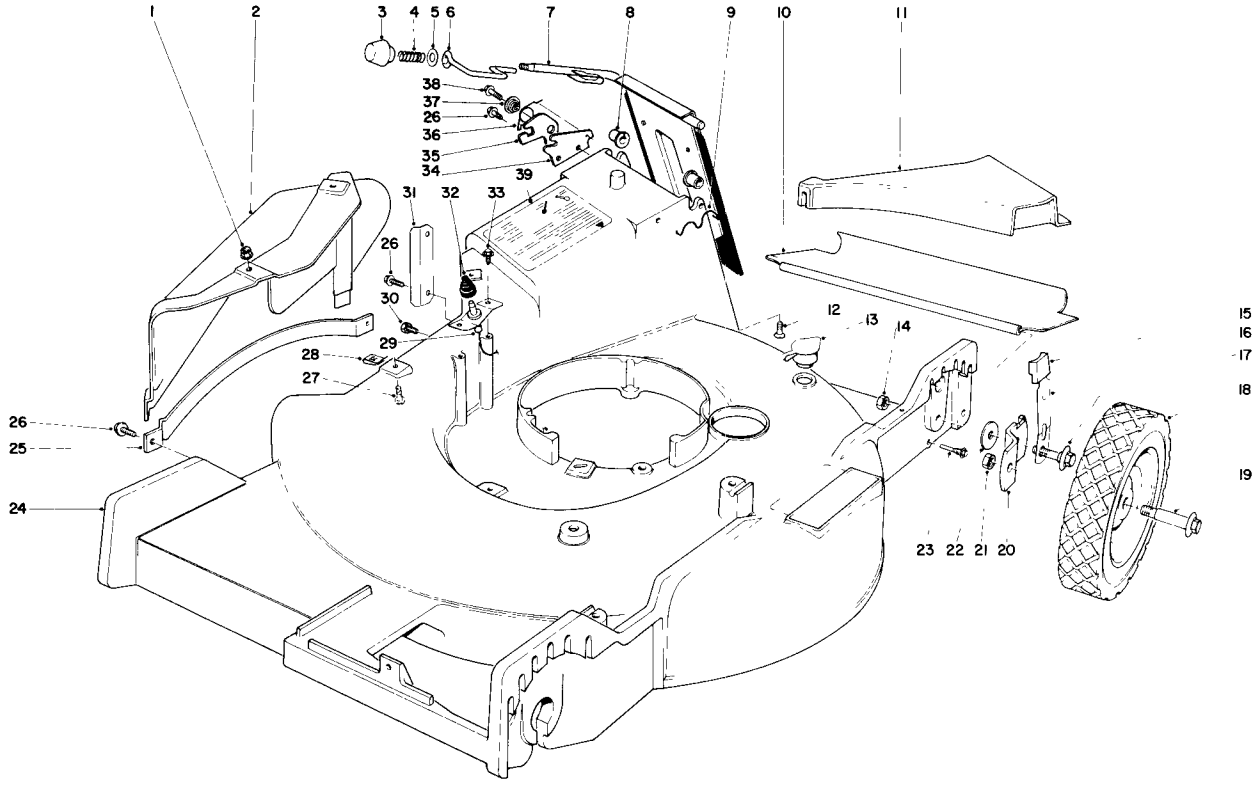


# HOUSING ASSEMBLY MODEL NOS. 20550 AND 20660

| Ref. No. | Part No. | Description | No. Used |
|---|---|---|---|
| 1 | 32128-14 | Flange Nut | 2 |
| 2 | 23-0180 | Deflector | 1 |
| 3 | 233-37 | Knob | 1 |
| 4 | 23-0920 | Spring - Compression | 1 |
| 5 | 23-1120 | Washer | 1 |
| 6 | 23-0940 | Latch Door | 1 |
| 7 | 23-0990 | Door Handle | 1 |
| 8 | 23-0880 | Bushing | 2 |
| 9 | 23-0200 | Door Retainer | 1 |
| 10 | 23-0560 | Rear Safety Shield | 1 |
| 11 | 23-0360 | Insert Rear | 1 |
| 12 | 32144-17 | Screw Flat Head | 2 |
| 13 | 6-4500 | Washout Plug | 1 |
| 14 | 32146-5 | Locknut | 1 |
| 15 | 6-6230 | Knob Arm | 1 |
| * | 6-6220 | Knob Arm | 1 |
| 16 | 23-0400 | Spring Arm | 2 |
| 17 | 12-2440 | Pivot Screw | 2 |
| 18 | 12-2620 | Wheel & Tire Assembly | 2 |
| 19 | 3-2652 | Wheel Bolt | 2 |

| Ref. No. | Part No. | Description | No. Used |
|---|---|---|---|
| 20 | 20-3190 | Pivot Arm | 2 |
| 21 | 32146-12 | Locknut | 2 |
| 22 | 5-4460 | Pivot Washer | 2 |
| 23 | 8-6160 | Pivot Screw | 2 |
| 24 | 6-1789 | Housing | 1 |
| 25 | 23-0210 | Bar - Safety | 1 |
| 26 | 12-3270 | Screw | 4 |
| 27 | 3290-199 | Speed Nut | 2 |
| 28 | 3290-133 | Screw Round Head | 2 |
| 29 | 23-0150 | Deflector Switch (Incl. Ref. # 32) | 1 |
| 30 | 32104-114 | Screw Self Tapping | 1 |
| 31 | 23-0140 | Clip - Retaining | 1 |
| 32 | 12-4930 | Boot Switch | 1 |
| 33 | 32144-12 | Screw | 2 |
| 34 | 23-1040 | Plate Latch | 1 |
| 35 | 12-1190 | Latch - Safety | 1 |
| 36 | 23-1200 | Spring - Torsion | 1 |
| 37 | 23-1180 | Spacer - Latch | 1 |
| 38 | 11-9760 | Screw Thread Forming | 1 |
| 39 | 23-1280 | Decal - Caution | |

*Not Illustrated

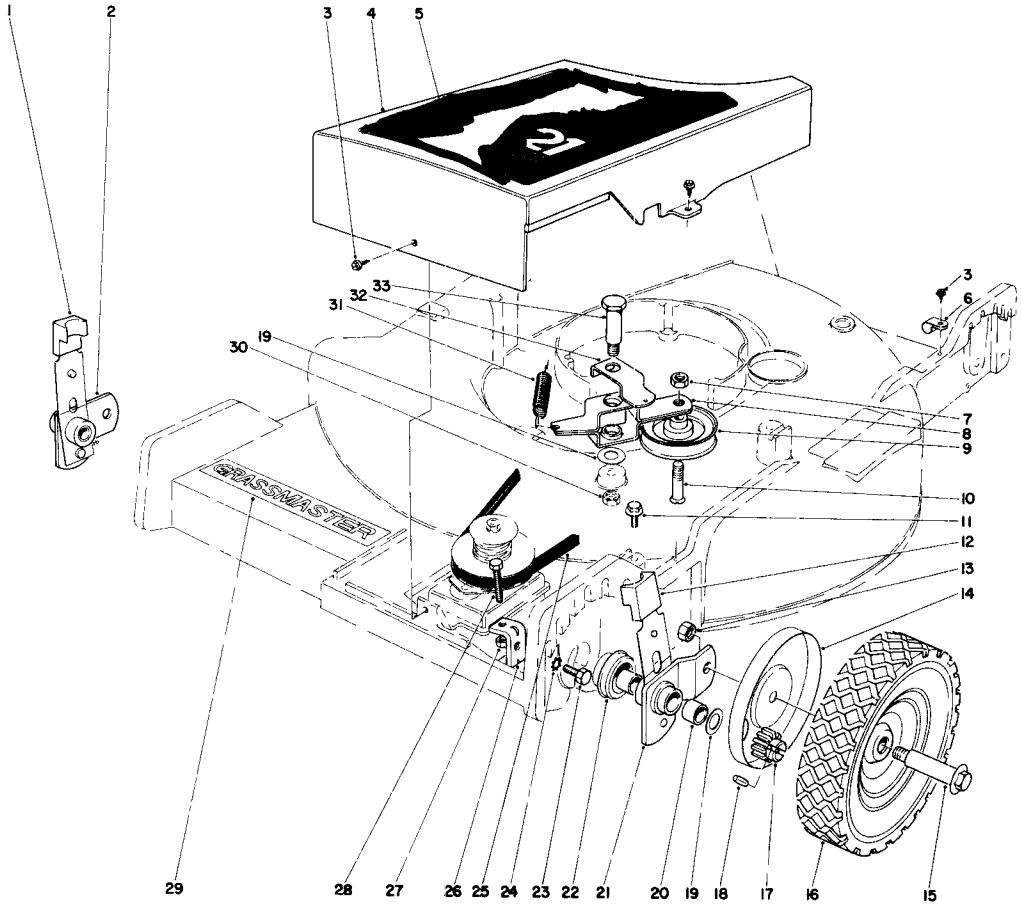


# FRONT WHEEL AND PIVOT ARM ASSEMBLY
# MODEL NOS. 20550 AND 20660

| Ref. No. | Part No. | Description | No. Used |
|---|---|---|---|
| 1 | 6-6230 | Knob Arm | 1 |
| 2 | 23-0740 | Pivot Arm (Incl. Ref. # 20) | 1 |
| 3 | 32104-76 | Self Tapping Screw | 4 |
| 4 | 23-0510 | Belt Cover | 1 |
| 5 | 23-0840 | Decal - Belt Cover | 1 |
| 6 | 2412-52 | Cable Clamp | 1 |
| 7 | 3219-3 | Nut | 1 |
| 8 | 23-0440 | Idler Bracket | 1 |
| 9 | 23-0570 | Idler Pulley | 1 |
| 10 | 23-0850 | Screw - Low Head | 1 |
| 11 | 32144-11 | Screw Hex. Hd. | 2 |
| 12 | 6-6220 | Knob - Arm | 1 |
| 13 | 32146-12 | Locknut | 2 |
| 14 | 23-0280 | Cover - Wheel | 2 |
| 15 | 3-2652 | Wheel Bolt | 2 |
| 16 | 12-2610 | Wheel & Tire | 2 |
| 17 | 18-9690 | Pinion Gear | 2 |
| 18 | 3284-3 | Coil Pin | 2 |

| Ref. No. | Part No. | Description | No. Used |
|---|---|---|---|
| 19 | 18-9810 | Thrust Washer | 3 |
| 20 | 256-1 | Bushing | 4 |
| 21 | 23-0750 | Pivot Arm (Incl. Ref. # 20) | 1 |
| 22 | 23-0380 | End Cap | 2 |
| 23 | 322-1 | Hex. Hd. Capscrew | 1 |
| 24 | 3255-8 | Lockwasher | 1 |
| 25 | 23-0220 | V-Belt | 1 |
| 26 | 23-0540 | Bracket | 1 |
| 27 | 3218-1 | Jam Nut | 1 |
| 28 | 23-0640 | Screw | 1 |
| 29 | 23-0930 | Decal - Grassmaster | 1 |
| 30 | 32146-2 | Locknut | 1 |
| 31 | 23-0530 | Spring Tension | 1 |
| 32 | 23-0100 | Lever - Idler Bracket | 1 |
| 33 | 23-0310 | Bolt - Shoulder | 1 |
| * | 23-0700 | Loose Parts Bag (Model 20550) | 1 |
| * | 23-0690 | Loose Parts Bag (Model 20660) | 1 |

*Not Illustrated

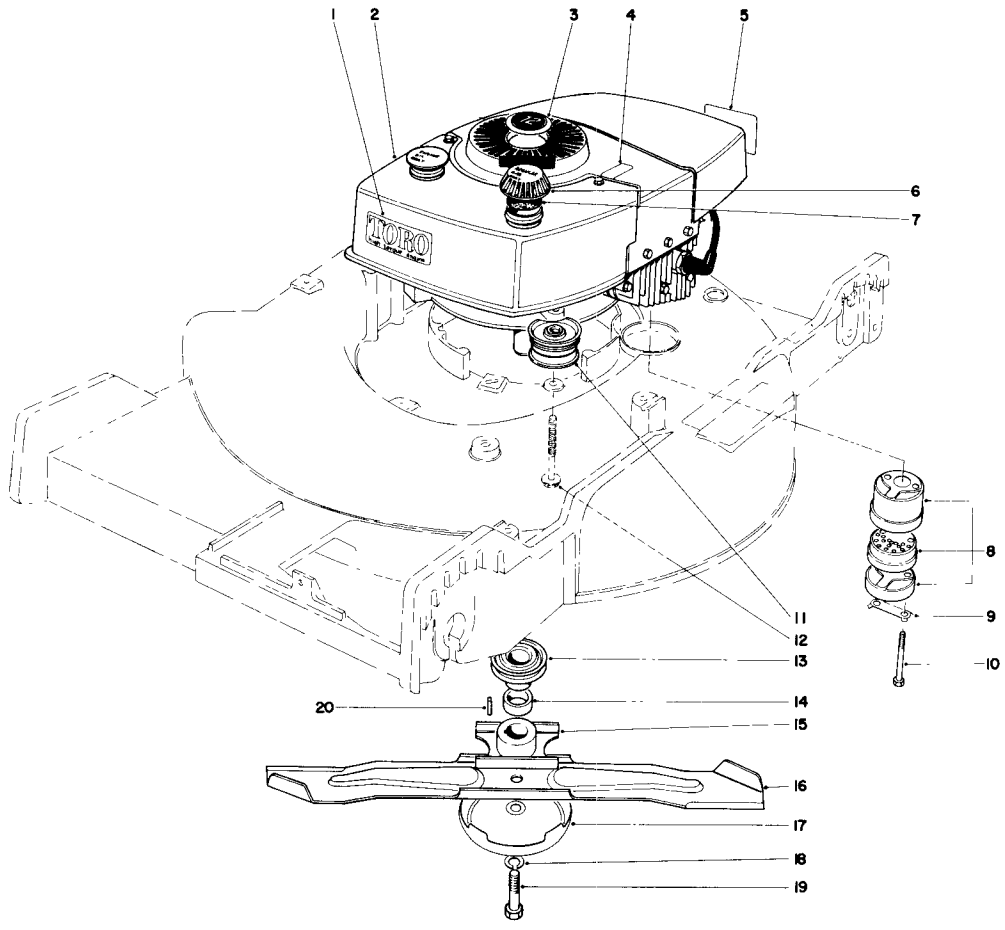


# ENGINE ASSEMBLY MODEL NO. 20550

| Ref. No. | Part No. | Description | No. Used |
|---|---|---|---|
| 1 | 23-1260 | Decal - High Torque | 1 |
| 2 | 221-465 | Engine | 1 |
| 3 | 23-0600 | Plug Button | 1 |
| 4 | 20-4680 | Decal - Caution | 1 |
| 5 | 20-2710 | Decal - Maintenance | 1 |
| 6 | 22-4790 | Gas Cap (Incl. Ref. # 7) | 1 |
| 7 | 5-2044 | Gasket Gas Cap | 1 |
| 8 | 5-4769 | Muffler Assembly | 1 |
| 9 | 3-5094 | Locking Clip | 1 |
| 10 | 321-20 | Hex. Hd. Screw | 2 |

| Ref. No. | Part No. | Description | No. Used |
|---|---|---|---|
| 11 | 23-2470 | Pulley Idler | 1 |
| 12 | 11-0580 | Screw | 3 |
| 13 | 23-0130 | Pulley - Driver | 1 |
| 14 | 23-0120 | Spacer Pulley | 1 |
| 15 | 23-0110 | Blade Retainer | 1 |
| 16 | 23-0070 | Blade | 1 |
| 17 | 8-4240 | Anti Scalp Cup | 1 |
| 18 | 3253-22 | Lockwasher | 1 |
| 19 | 23-0080 | Screw Blade | 1 |
| 20 | 21-5060 | Square Key | 1 |

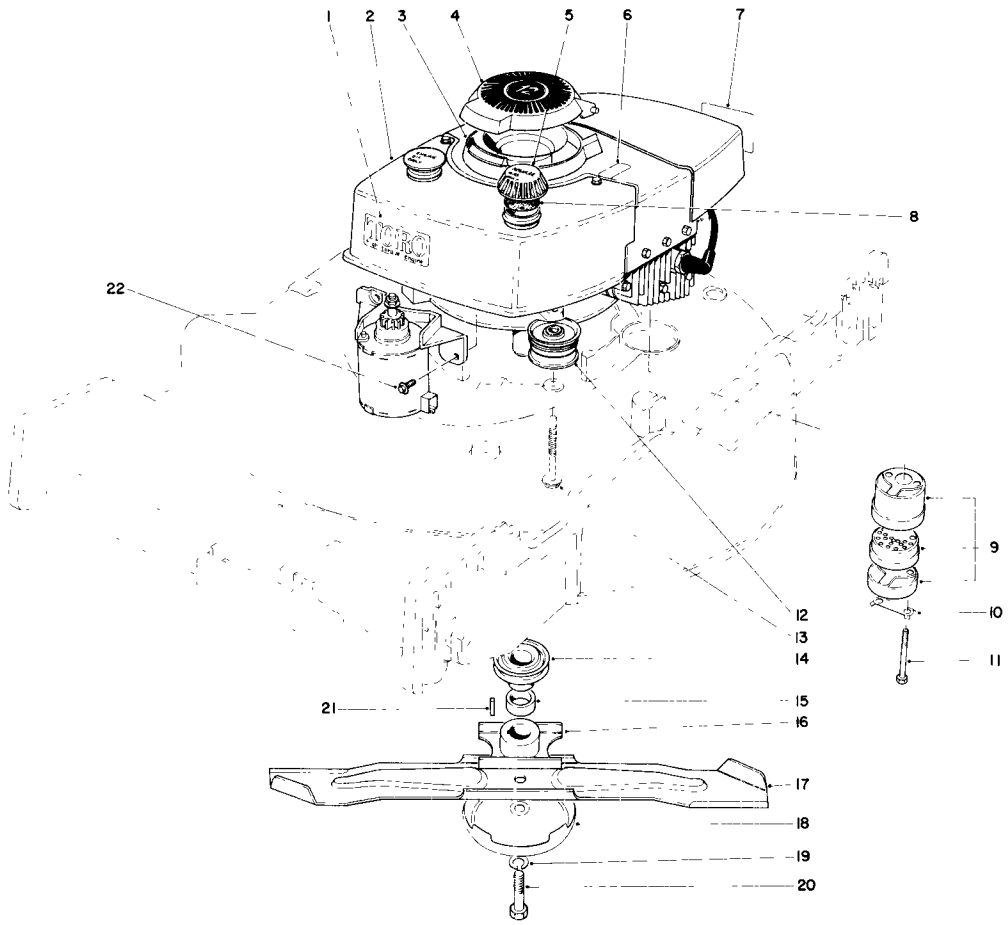


# ENGINE ASSEMBLY MODEL NO. 20660

| Ref. No. | Part No. | Description | No. Used |
|---|---|---|---|
| 1 | 23-1260 | Decal - High Torque | 1 |
| 2 | 221-464 | Engine | 1 |
| 3 | 21-4850 | Base-Hinged | 1 |
| 4 | 23-0620 | Cover-Hinged | 1 |
| 5 | 22-4790 | Gas Cap (Incl. Ref. # 8) | 1 |
| 6 | 20-4680 | Decal - Caution | 1 |
| 7 | 20-2710 | Decal - Maintenance | 1 |
| 8 | 5-2044 | Gasket Gas Cap | 1 |
| 9 | 5-4769 | Muffler Assembly | 1 |
| 10 | 3-5094 | Locking Clip | 1 |
| 11 | 321-20 | Capscrew | 2 |

| Ref. No. | Part No. | Description | No. Used |
|---|---|---|---|
| 12 | 23-2470 | Idler Pulley | 1 |
| 13 | 11-0580 | Screw | 3 |
| 14 | 23-0130 | Driver Pulley | 1 |
| 15 | 23-0120 | Spacer Pulley | 1 |
| 16 | 23-0110 | Blade Retainer | 1 |
| 17 | 23-0070 | Blade | 1 |
| 18 | 8-4240 | Anti Scalp Cap | 1 |
| 19 | 3253-22 | Lockwasher | 1 |
| 20 | 23-0080 | Screw Blade | 1 |
| 21 | 21-5060 | Square Key | 1 |
| 22 | 12-3270 | Screw Special | 2 |

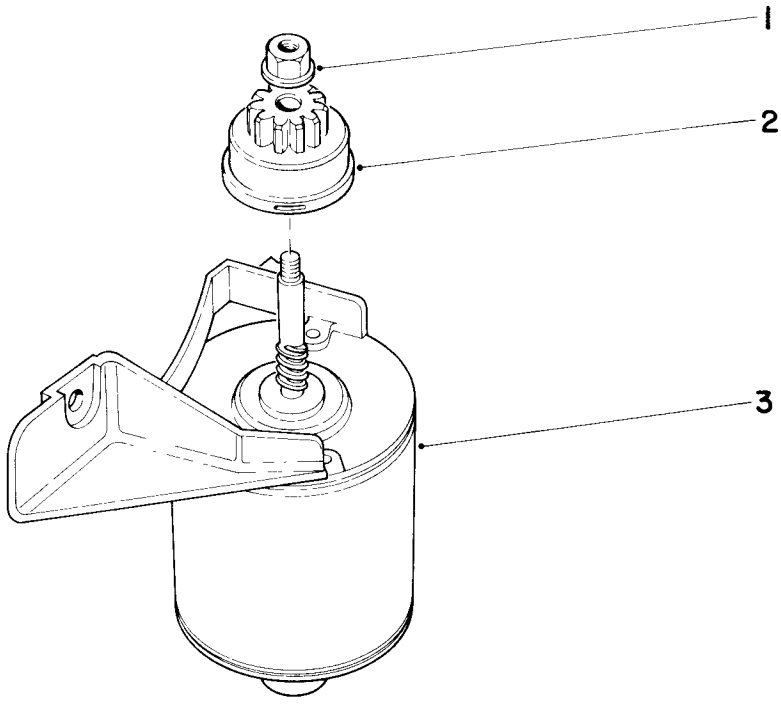


# STARTER MOTOR MODEL NO. 20660

| Ref. No. | Part No. | Description | No. Used |
|---|---|---|---|
| 1 | 32128-16 | Flange Nut | 1 |
| 2 | 22-9770 | Pinion Assembly | 1 |

| Ref. No. | Part No. | Description | No. Used |
|---|---|---|---|
| 3 | 23-0910 | Starter Motor (Incl. Ref. #1&2) | 1 |

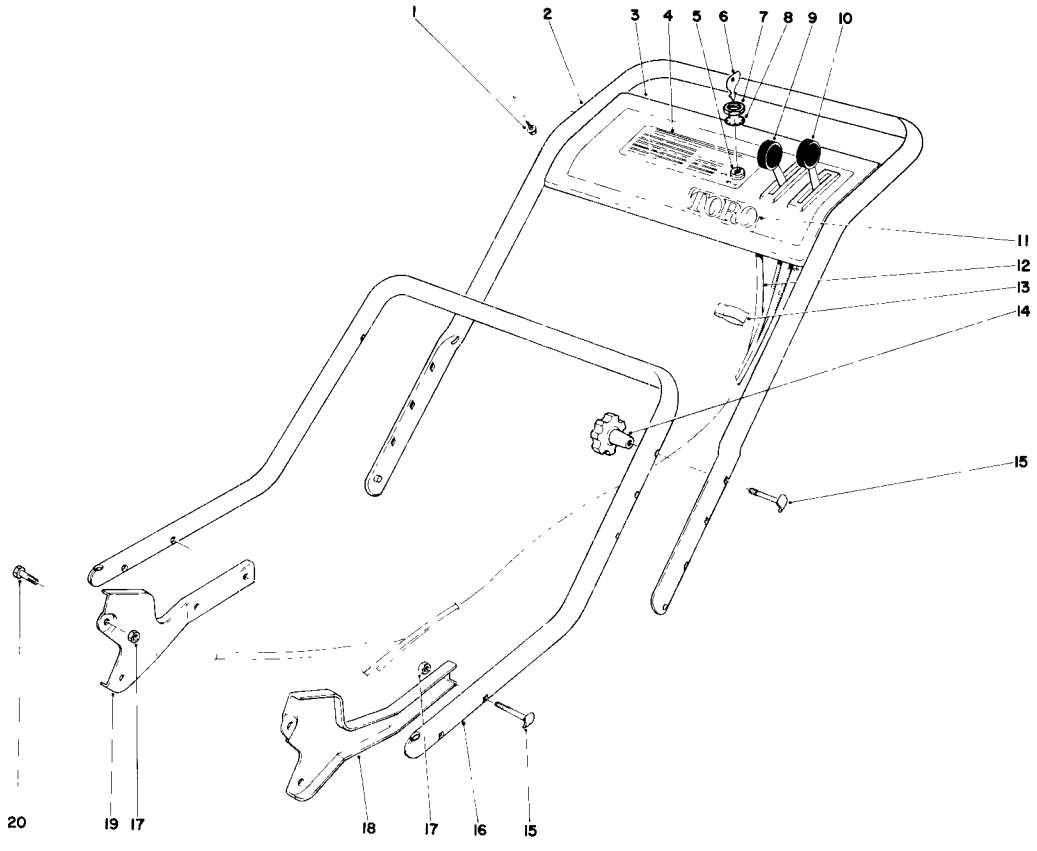


# HANDLE ASSEMBLY MODEL NO. 20550

| Ref. No. | Part No. | Description | No. Used |
|---|---|---|---|
| 1 | 32104-76 | Self Tapping Screw | 4 |
| 2 | 23-0580 | Upper Handle | 1 |
| 3 | 23-0500 | Control Plate | 1 |
| 4 | 23-0770 | Decal - Control Plate | 1 |
| 5 | 23-0650 | On - Off Switch | 1 |
| 6 | 218-412 | Key (Set of 2) | 1 |
| 7 | 218-461 | Hex Nut | 1 |
| 8 | 3254-5 | Lockwasher | 1 |
| 9 | 20-9780 | Speed Control | 1 |
| 10 | 20-9570 | Traction Control | 1 |

| Ref. No. | Part No. | Description | No. Used |
|---|---|---|---|
| 11 | 23-0800 | Decal - Toro | 1 |
| 12 | 23-0820 | Harness Wiring | 1 |
| 13 | 218-465 | Clip - Conduit | 2 |
| 14 | 19-4050 | Knob Handle Release | 2 |
| 15 | 6-6330 | Screw - Handle | 6 |
| 16 | 20-9820 | Lower Handle | 1 |
| 17 | 32146-5 | Nut | 8 |
| 18 | 23-0430 | Latch Handle L.H. | 1 |
| 19 | 23-0420 | Latch Handle R.H. | 1 |
| 20 | 322-4 | Capscrew | 4 |

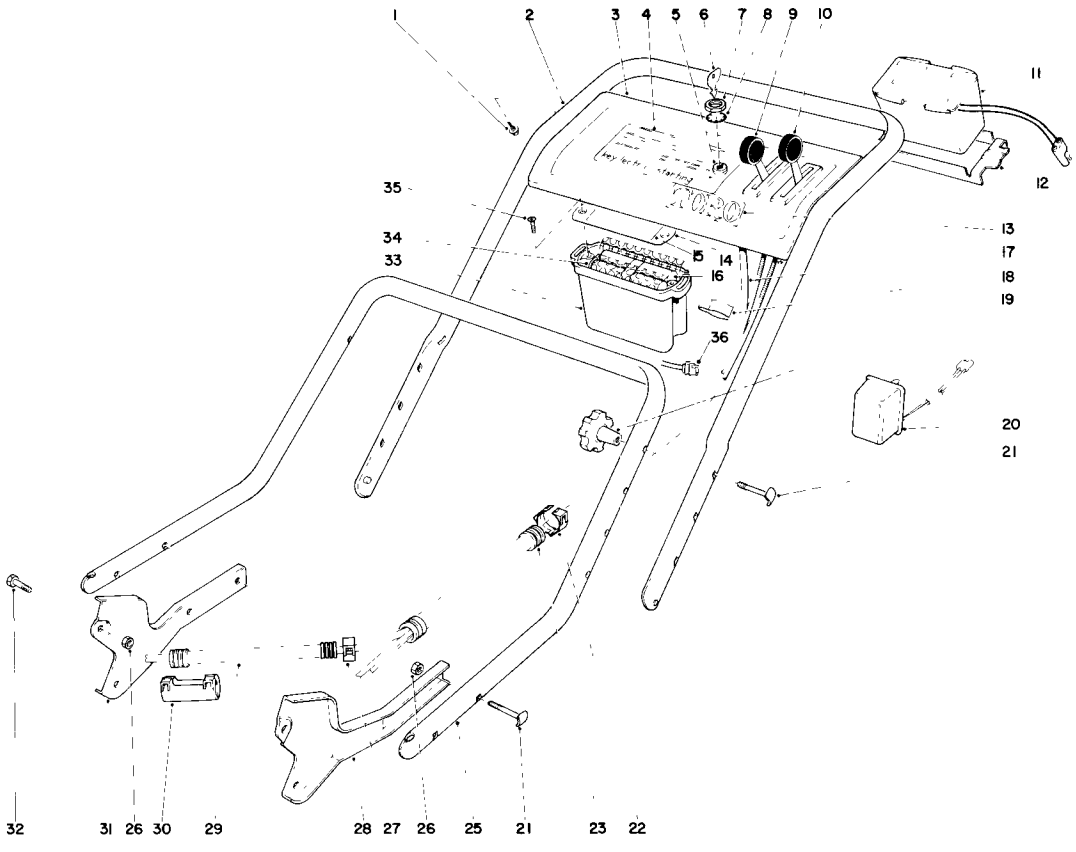


# HANDLE ASSEMBLY MODEL NO. 20660

| Ref. No. | Part No. | Description | No. Used |
|---|---|---|---|
| 1 | 32104-76 | Screw Self Tapping | 4 |
| 2 | 23-0580 | Upper Handle | 1 |
| 3 | 23-0590 | Control Plate | 1 |
| 4 | 23-0780 | Decal Control Plate | 1 |
| 5 | 23-0660 | Starter Switch | 1 |
| 6 | 218-412 | Key (Set of 2) | 1 |
| 7 | 218-461 | Hex Nut | 1 |
| 8 | 3254-5 | Lockwasher | 1 |
| 9 | 20-9780 | Control Speed | 1 |
| 10 | 20-9570 | Control Traction | 1 |
| 11** | 18-8810 | Battery | 1 |
| 12 | 20-0170 | Adapter | 1 |
| 13 | 23-0800 | Decal - Toro | 1 |
| 14 | 6-8230 | Cover Battery Pack | 1 |
| 15 | 8-5600 | Decal - Battery | 1 |
| 16** | 11-7260 | 10 Cell Battery Pack | 1 |
| 17 | 23-0830 | Wiring Harness | 1 |
| 18 | 218-465 | Clip Conduit | 2 |

| Ref. No. | Part No. | Description | No. Used |
|---|---|---|---|
| 19 | 19-4050 | Knob Handle Release | 2 |
| 20 | 6-9780 | Battery Charger | 1 |
| 21 | 6-6330 | Handle Screw | 6 |
| 22 | 2412-50 | Ring Fitting | 2 |
| 23 | 23-1230 | Upper Wiring Harness Cover | 1 |
| 25 | 20-9820 | Lower Handle | 1 |
| 26 | 32146-5 | Nut | 8 |
| 27 | 2412-48 | Ring Fitting | 2 |
| 28 | 23-0430 | Latch Handle L.H. | 1 |
| 29 | 23-1220 | Lower Wiring Harness Cover | 1 |
| 30 | 2412-49 | Breakout Fitting | 1 |
| 31 | 23-0420 | Latch Handle R.H. | 1 |
| 32 | 322-4 | Capscrew | 4 |
| 33 | 6-9750 | Container - Battery Pack | 1 |
| 34 | 6-8320 | Spacer - Battery | 1 |
| 35 | 32104-93 | Self Tapping Screw | 2 |
| 36 | 11-3790 | Plug & Wire Assembly | 1 |
| * | 5-3556 | Starter Rope | 1 |

*Not Illustrated

**Note: Check your unit before ordering battery 16 or 11 as to which battery is used on unit.

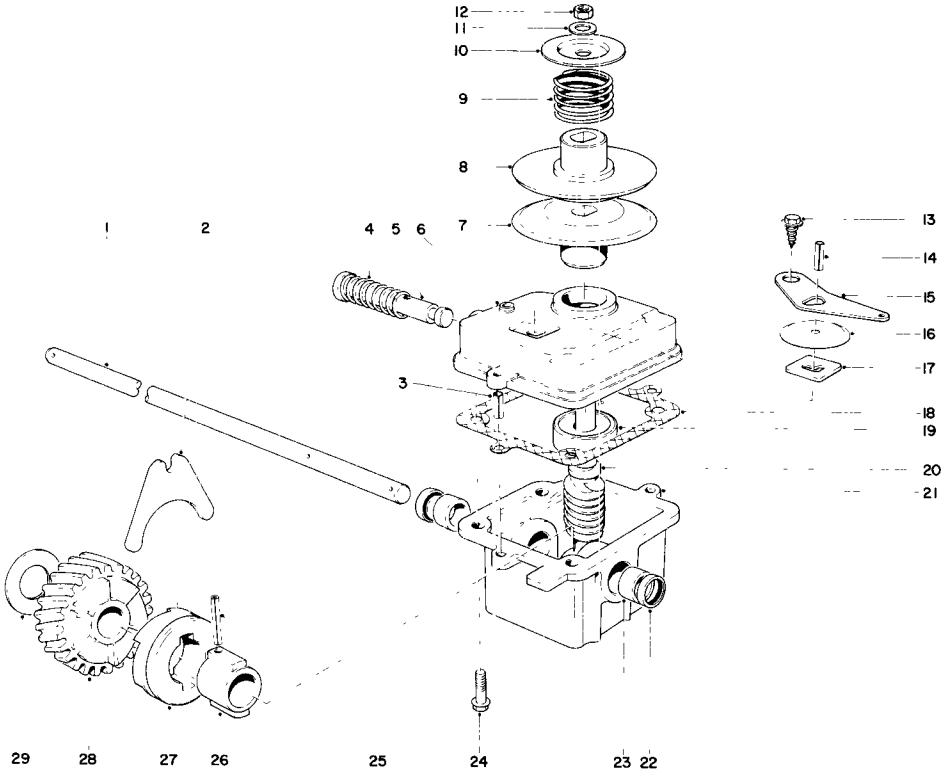


# GEAR CASE ASSEMBLY MODEL NOS. 20550 AND 20660

| Ref. No. | Part No. | Description | No. Used |
|---|---|---|---|
| 1 | 18-9730 | Drive Shaft | 1 |
| 2 | 5-3247 | Shifter Fork | 1 |
| 3 | 32121-1 | Roll Pin | 2 |
| 4 | 3-0731 | Spring | 1 |
| 5 | 5-3248 | Shifter Rod | 1 |
| 6 | 5-3283 | Cover | 1 |
| 7 | 23-0290 | Pulley Half-Lower | 1 |
| 8 | 23-0300 | Pulley Half-Upper | 1 |
| 9 | 23-0230 | Spring - Compression | 1 |
| 10 | 23-0270 | Spring Retainer | 1 |
| 11 | 3256-16 | Washer | 1 |
| 12 | 32153-4 | Locknut | 1 |
| 13 | 32140-64 | Self Tapping Screw | 1 |
| 14 | 32121-23 | Roll Pin | 1 |
| 15 | 5-3252 | Shifter Arm | 1 |

| Ref. No. | Part No. | Description | No. Used |
|---|---|---|---|
| 16 | 3-2615 | Transmission Dust Cover | 1 |
| 17 | 3-0681 | Latch Plate | 1 |
| 18 | 3-0734 | Gasket - Gear Case | 1 |
| 19 | 251-144 | Ball Bearing | 1 |
| 20 | 23-0520 | Worm Shaft | 1 |
| 21 | 5-4459 | Gear Case (Incl. Ref. #22&23) | 1 |
| 22 | 253-86 | Oil Seal | 2 |
| 23 | 256-110 | Bushing | 2 |
| 24 | 11-9760 | Screw | 4 |
| 25 | 32121-88 | Coil Pin | 1 |
| 26 | 3-0721 | Sleeve | 1 |
| 27 | 19-5660 | Clutch Jaw | 1 |
| 28 | 18-9740 | Helical Gear | 1 |
| 29 | 3-0724 | Thrust Washer | 1 |
| * | 23-0330 | Complete Gear Case | 1 |

*Not Illustrated

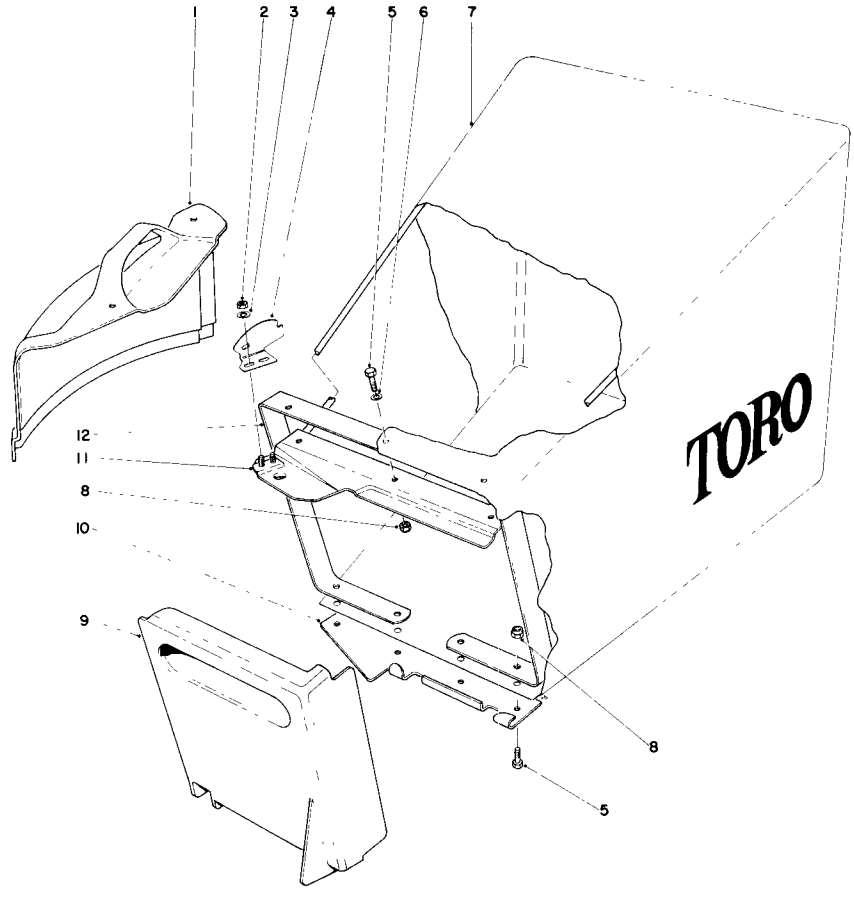


# GRASS BAG ASSEMBLY
# MODEL NOS. 20440, 20550 AND 20660

| Ref. No. | Part No. | Description | No. Used |
|---|---|---|---|
| 1 | 23-0170 | Cover | 1 |
| 2 | 3296-42 | Locknut | 2 |
| 3 | 3256-22 | Flat Washer | 2 |
| 4 | 23-1060 | Latch Bag | 1 |
| 5 | 3290-321 | Hex. Hd. Machine Screw | 7 |
| 6 | 3256-14 | Flat Washer | 3 |

| Ref. No. | Part No. | Description | No. Used |
|---|---|---|---|
| 7 | 6-1389 | Grass Bag | 1 |
| 8 | 32153-1 | Locknut | 7 |
| 9 | 23-1140 | Bag Door | 1 |
| 10 | 23-1150 | Bracket-Door | 1 |
| 11 | 23-1090 | Bag Frame | 1 |
| 12 | 23-1110 | Bag Support | 1 |

# ENGINE TECUMSEH MODEL NO. TNT 120-12002
## (MOWER MODEL NOS. 20440 AND 20550)

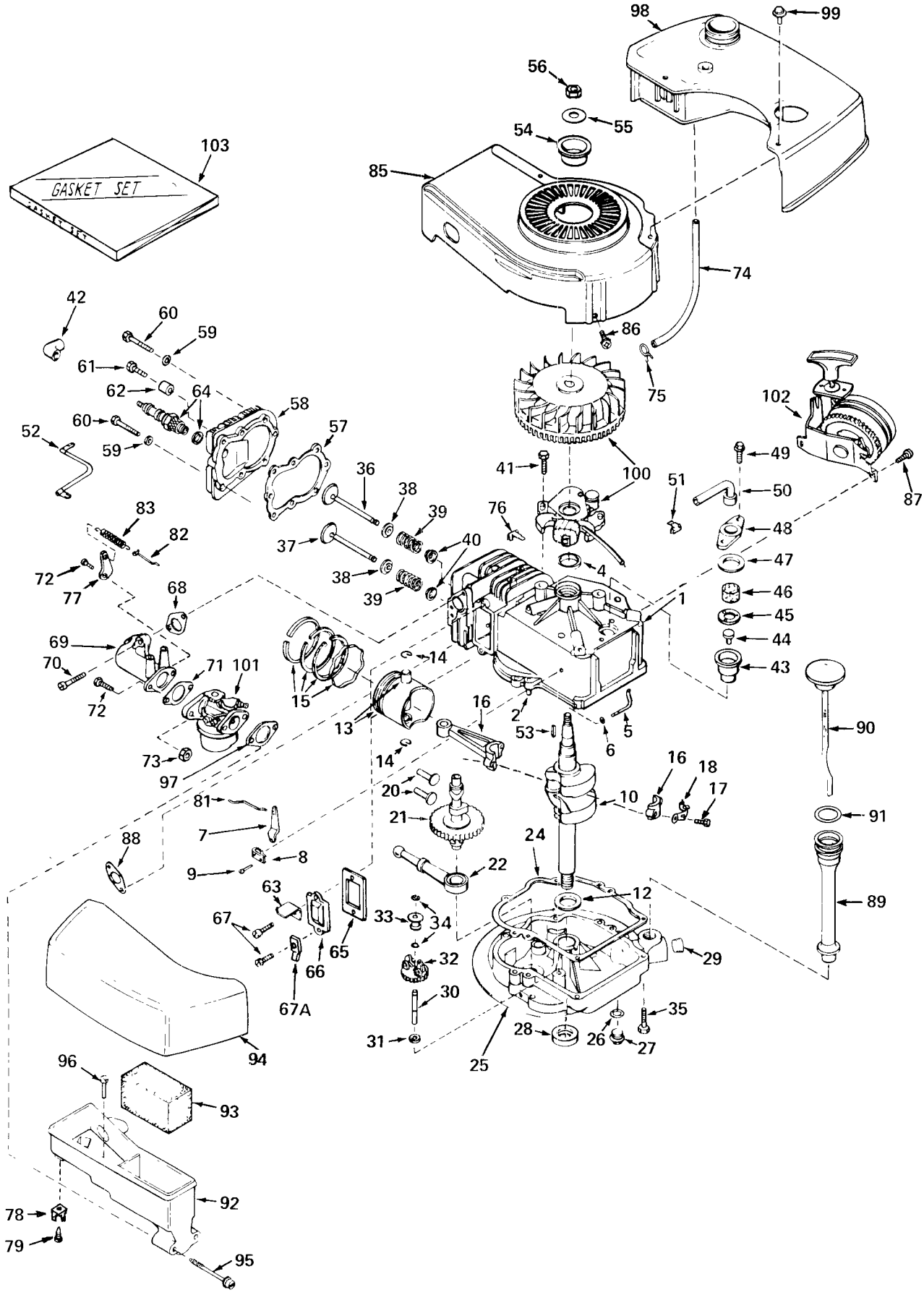

# ENGINE TECUMSEH MODEL NO. TNT 120-12002
## (MOWER MODEL NOS. 20440 AND 20550)

| Ref. No. | Part No. | Description | No. Used |
|---|---|---|---|
| 1 | 33899 | Cylinder Assembly (Incl. # 2, 4 & 87) | 1 |
| 2 | 26727 | Pin, Dowel | 2 |
| 4 | 32600 | Seal, Oil | 1 |
| 5 | 30589 | Rod, Governor (Incl. # 6) | 1 |
| 6 | 28277 | Washer, Flat | 1 |
| 7 | 32651 | Lever, Governor | 1 |
| 8 | 31335 | Clamp, Governor Lever | 1 |
| 9 | 650548 | Screw, Hex Slotted Washer Hd. | 1 |
| 10 | 33900 | Crankshaft | 1 |
| 12 | 32323 | Washer, Thrust | 1 |
| 13 | 33562 | Piston & Pin Assembly (Incl. 2 of # 14) (Standard) | 1 |
| 13 | 33563 | Piston & Pin Assembly (Incl. 2 of # 14) (.010 Oversize) | 1 |
| 13 | 33564 | Piston & Pin Assembly (Incl. 2 of # 14) (.020 Oversize) | 1 |
| 14 | 20381 | Ring, Piston Pin Retaining | 2 |
| 15 | 33567 | Ring Set, Piston (Standard) | 1 |
| 15 | 33568 | Ring Set, Piston (.010 Oversize) | 1 |
| 15 | 33569 | Ring Set, Piston (.020 Oversize) | 1 |
| 16 | 32875 | Rod Assembly, Connecting (Incl. # 17 & 18) | 1 |
| 17 | 32610 | Bolt, Connecting Rod | 2 |
| 18 | 32609 | Plate, Lock | 1 |
| 20 | 27241 | Lifter, Valve | 2 |
| 21 | 33553 | Camshaft (Mech. Comp. Release) | 1 |
| 22 | 29914 | Pump Assembly, Oil | 1 |
| 24 | *26750A | Gasket, Mounting Flange | 1 |
| 25 | 33901 | Flange Assembly, Mounting (Incl. # 27, 28, 29 & 30) | 1 |
| 26 | *28833 | Gasket, Oil Drain Plug | 1 |
| 27 | 27244 | Plug, Oil Drain | 1 |
| 28 | 27897 | Seal, Oil | 1 |
| 29 | 33885 | Plug, Oil Drain | 1 |
| 30 | 30574 | Shaft, Mechanical Governor | 1 |
| 31 | 30590A | Washer, Flat | 1 |
| 32 | 33902 | Gear Assembly, Governor | 1 |
| 33 | 33903 | Spool, Governor | 1 |
| 34 | 29193 | Ring, Retaining | 2 |
| 35 | 650488 | Screw, Hex Hd. Sems | 6 |
| 36 | 29314A | Valve, Intake (Standard) (Incl. # 38, 39 & 40) | 1 |
| 36 | 29315B | Valve, Intake (1/32" Oversize) (Incl. # 38, 39 & 40) | 1 |
| 37 | 29313B | Valve, Exhaust (Standard) (Incl. # 38, 39 & 40) | 1 |
| 37 | 29315B | Valve, Exhaust (1/32 Oversize) (Incl. # 38, 39 & 40) | 1 |
| 38 | 31671 | Cap, Upper Valve Spring | 2 |
| 39 | 31672 | Spring, Valve | 2 |
| 40 | 31673 | Cap, Lower Valve Spring | 2 |
| 41 | 650489 | Screw, Hex. Hd. Sems w/Flatwasher | 2 |
| 42 | 610118 | Cover, Spark Plug | 1 |
| 43 | 33731 | Body, Breather Tube | 1 |
| 44 | 33732 | Valve, Check | 1 |
| 45 | 33733 | Baffle, Breather | 1 |
| 46 | 33734 | Element, Breather | 1 |
| 47 | *33735 | Gasket, Breather | 1 |
| 48 | 33737 | Cover, Breather | 1 |
| 49 | 650768 | Screw, Hex. Hd. w/Conical Washer | 2 |
| 50 | 33886 | Tube, Breather | 1 |
| 51 | 33887 | Clip, Breather Tube | 1 |
| 52 | 33888 | Wire, Ground | 1 |
| 53 | 27247 | Key, Flywheel | 1 |
| 54 | 33914 | Cup | 1 |
| 55 | 650490 | Washer, Belleville | 1 |
| 56 | 650607 | Nut, Flywheel | 1 |
| 57 | *33554 | Gasket, Cylinder Head | 1 |
| 58 | 33016 | Head, Cylinder | 1 |
| 59 | 26073 | Washer | 8 |
| 60 | 6021 | Screw, Hex. Hd. Cap | 5 |
| 61 | 650697 | Screw, Hex. Hd. Cap | 3 |
| 62 | 33892 | Spacer | 3 |
| 63 | 30593 | Clip, Magneto Wire | 1 |
| 64 | 33636 | Plug, Spark (Champion J-8 or equivalent) | 1 |
| 65 | *27234 | Gasket, Valve Spring Cover | 1 |
| 66 | 32755 | Cover, Valve Spring Box | 1 |
| 67 | 650128 | Screw, Fil. Slotted Hd. Sems | 2 |
| 67A | 33932 | Terminal | 1 |
| 68 | *30188 | Gasket, Intake Pipe | 1 |
| 69 | 33004 | Pipe, Intake | 1 |
| 70 | 650451 | Screw, Fil. Flex Hd. Self-Locking | 2 |
| 71 | 31688 | Gasket, Carburetor | 1 |
| 72 | 6202 | Screw, Hex. Hd. Cap Sems. | 2 |
| 73 | 29752 | Nut & Lockwasher | 2 |
| 74 | 32342 | Line, Fuel | 1 |
| 75 | 26460 | Clamp, Fuel Line | 2 |
| 76 | 29443 | Clip, Fuel Line | 1 |
| 77 | 33086 | Lever, R.P.M. Adjusting | 1 |
| 78 | 33933 | Terminal | 1 |
| 79 | 650760 | Screw, Pan Hd. Tri-Roundular Sheet Metal | 1 |
| 81 | 33133 | Link, Governor | 1 |
| 82 | 33295 | Link, Governor Spring | 1 |
| 83 | 31361 | Spring, Governor | 1 |
| 85 | 33891 | Housing, Blower | 1 |
| 86 | 650497 | Screw, Flex Pan Hd. | 2 |
| 87 | 650737 | Screw, Phil. Hex. Hd. Sems, Self-Tap | 3 |
| 88 | *30081 | Gasket, Exhaust | 1 |
| 89 | 33893 | Tube, Oil Filler | 1 |
| 90 | 33894 | Dipstick, Oil (Incl. # 91) | 1 |
| 91 | 33590 | "O" Ring | 1 |
| 92 | 33895 | Body, Air Cleaner | 1 |
| 93 | 33896 | Filter, Air | 1 |
| 94 | 33897 | Cover, Air Cleaner | 1 |
| 95 | 650762 | Screw, Fil. Hd. Mach. Sems. | 2 |
| 96 | 650784 | Screw, Hex. Hd. w/Flatwasher Thread Forming | 1 |
| 97 | *33051 | Gasket, Air Cleaner | 1 |
| 98 | 33904 | Tank, Fuel | 1 |
| 99 | 28763 | Screw, Hex Washer Hd. Thread Forming | 2 |
| 100 | 610755 | Magneto | 1 |
| 101 | 631831 | Carburetor | 1 |
| 102 | 590450A | Starter, Side Mount | 1 |
| 103 | 33906 | Gasket Set (Incl. Items Marked *) | 1 |

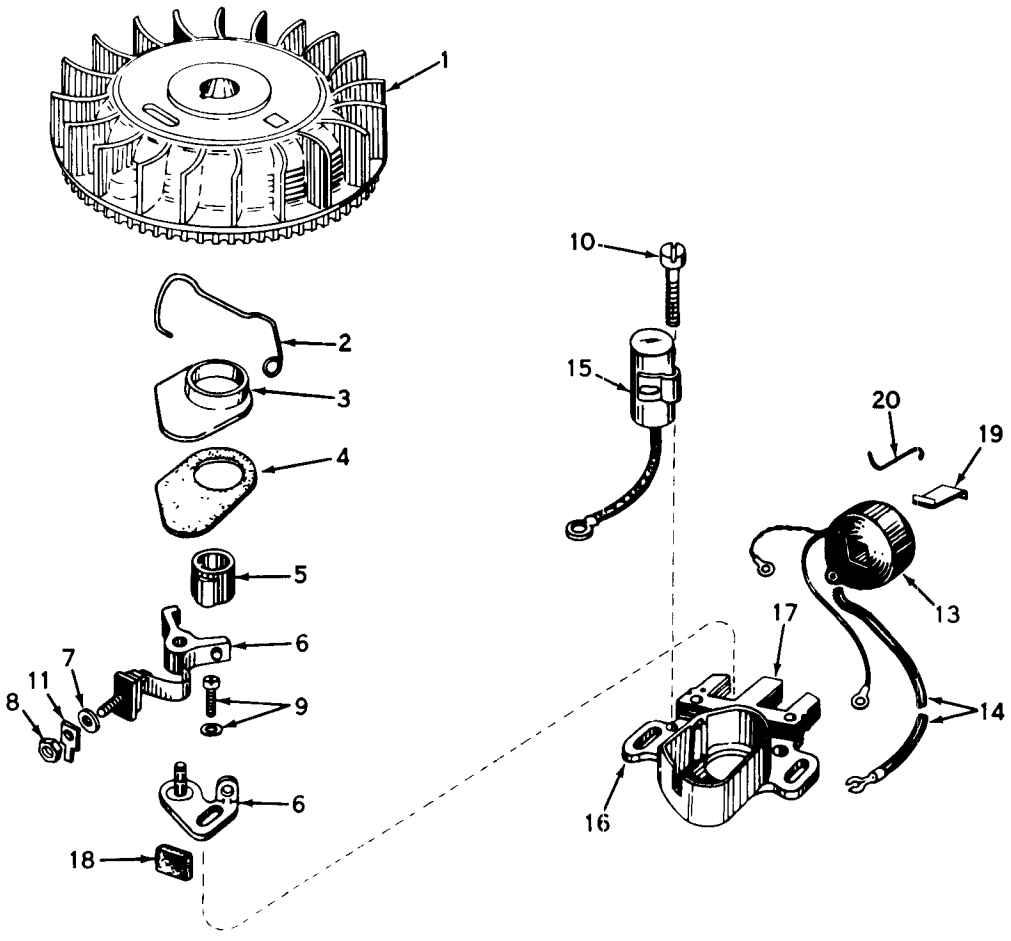


# MAGNETO NO. 610755

## (MOWER MODEL NOS. 20440 AND 20550)

| Ref. No. | Part No. | Description | No. Used |
|---|---|---|---|
| 1 | 32517 | Flywheel | 1 |
| 2 | 30551 | Spring, Breaker Box Dust Cover | 1 |
| 3 | 30550 | Cover, Breaker Box Dust | 1 |
| 4 | 32052 | Gasket, Dust Cover | 1 |
| 5 | 30992 | Cam, Breaker | 1 |
| 6 | 30547A | Breaker Assembly | 1 |
| 7 | 610385 | Washer, Terminal | 1 |
| 8 | 610408 | Nut, Terminal | 1 |
| 9 | 29181 | Screw & Washer Assy., Breaker | 1 |
| 10 | 610593 | Screw, Condenser Fastening | 1 |

| Ref. No. | Part No. | Description | No. Used |
|---|---|---|---|
| 11 | 30843 | Tab, Ground Terminal | 1 |
| 13 | 30560A | Coil Assy. (Incl. Ref. # 14) | 1 |
| 14 | 30554 | Wire, Ignition Lead | 1 |
| 15 | 30548A | Condenser | 1 |
| 16 | 30545 | Core & Plate Group | 1 |
| 17 | 30561A | Stator Assembly | 1 |
| 18 | 30549 | Felt, Cam Wiper | 1 |
| 19 | 29629 | Spring, Coil Wedge | 1 |
| 20 | 31311 | Clip, Coil Locking | 1 |

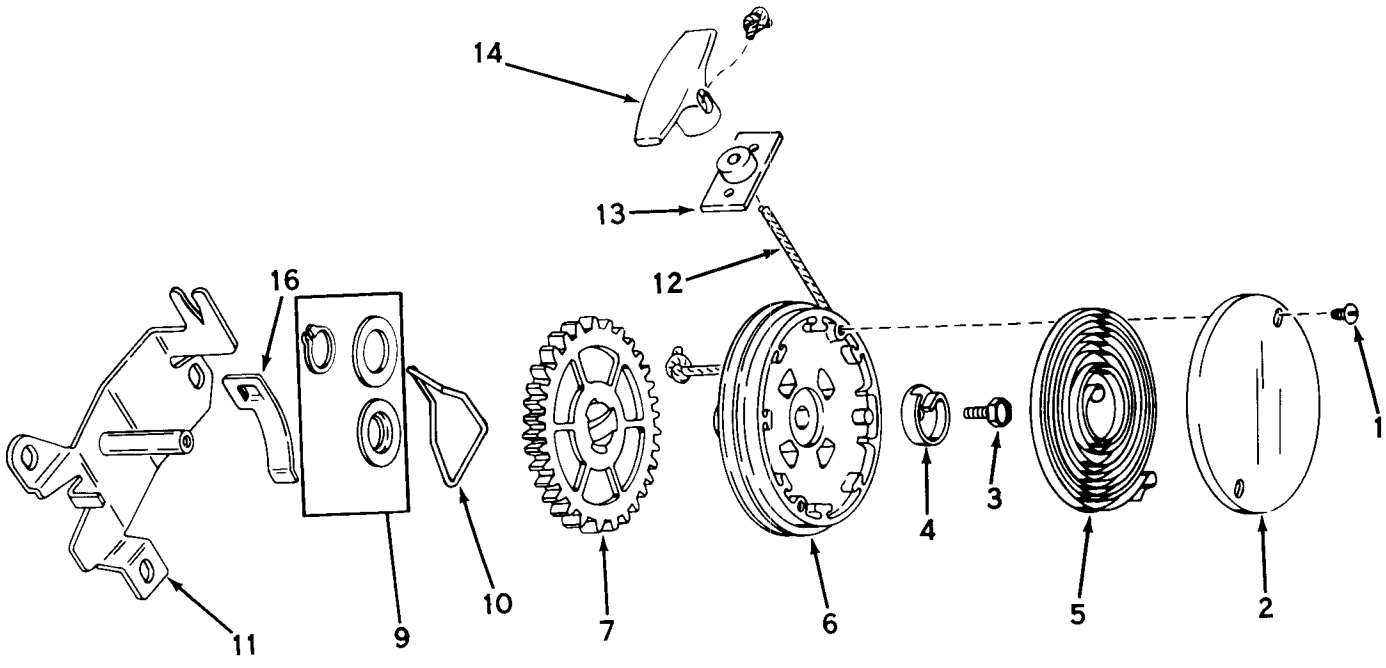


# REWIND STARTER NO. 590450A
## (MOWER MODEL NOS. 20440 AND 20550)

| Ref. No. | Part No. | Description | No. Used |
|---|---|---|---|
| 1 | 590430 | Screw, Cover | 2 |
| 2 | 590431 | Cover, Spring | 1 |
| 3 | 590472 | Screw, Hex Washer Hd. Taptite Left Hand Thrd. | 1 |
| 4 | 590432 | Hub, Spring | 1 |
| 5 | 590433 | Spring, Rewind | 1 |
| 6 | 590434A | Pulley Assy. (Incl. # 9) | 1 |
| 7 | 590435A | Gear | 1 |
| 9 | 590470 | Kit, Thrust Washer & Snap Ring | 1 |

| Ref. No. | Part No. | Description | No. Used |
|---|---|---|---|
| 10 | 590438 | Brake | 1 |
| 11 | 590439A | Bracket Assy., Mounting | 1 |
| 12 | 590451 | Rope, Starter (Length 61" and 5/32" Diameter) | 1 |
| 13 | 590441 | Bracket Assy. (Can be removed if not required) | 1 |
| 14 | 590452 | Handle, Starter | 1 |
| 16 | 590446 | Clip, Rope | 1 |

# ENGINE TECUMSEH MODEL NO. TNT 120-12001
## (MOWER MODEL NO. 20660)

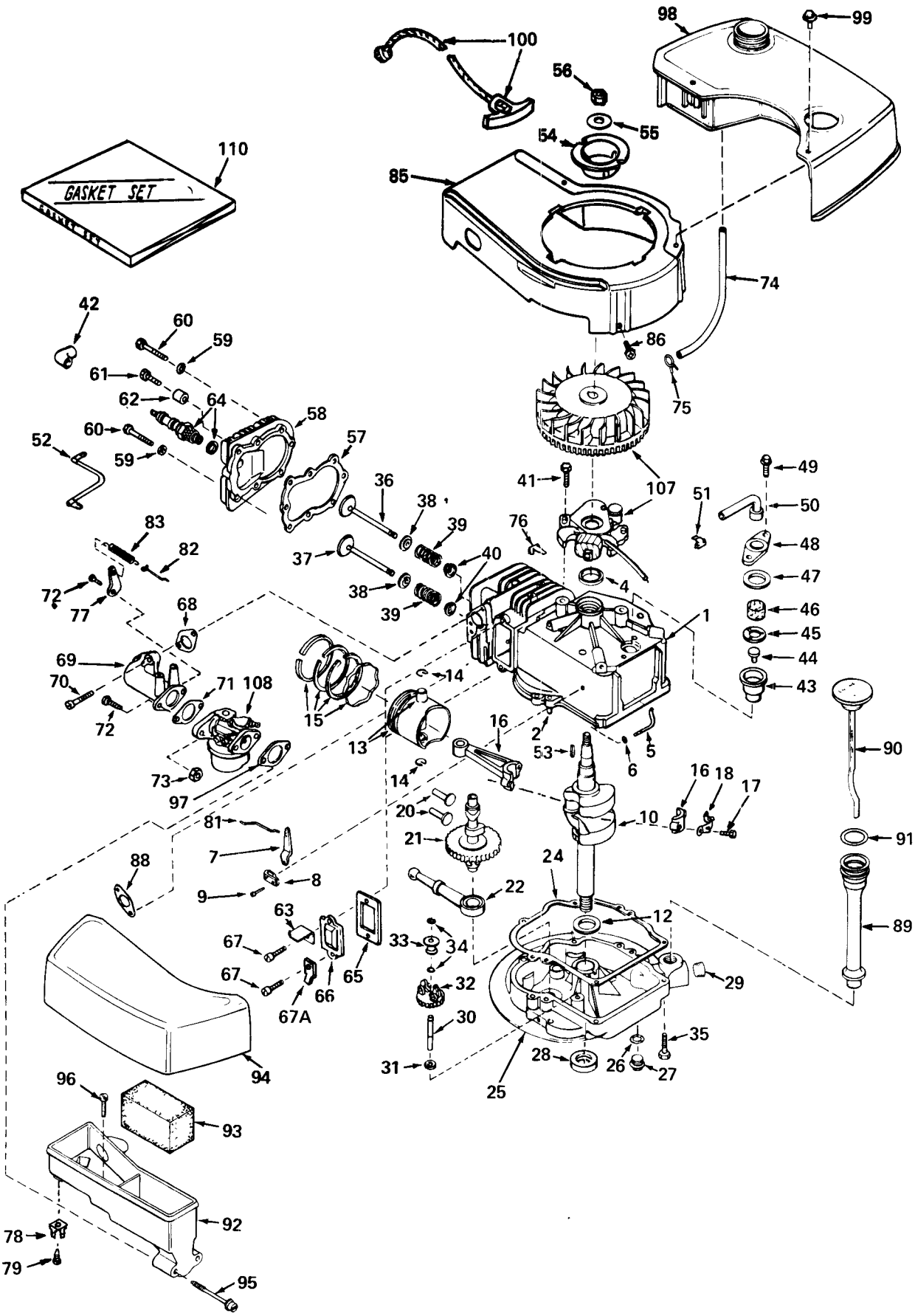

# ENGINE TECUMSEH MODEL NO. TNT 120-12001
## (MOWER MODEL NO. 20660)

| Ref. No. | Part No. | Description | No. Used |
|---|---|---|---|
| 1 | 33899 | Cylinder Assembly (Incl. Ref. # 2, 4 & 87) | 1 |
| 2 | 26727 | Pin, Dowel | 2 |
| 4 | 32600 | Seal, Oil | 1 |
| 5 | 30589 | Rod, Governor (Incl. # 6) | 1 |
| 6 | 28277 | Washer, Flat | 1 |
| 7 | 32651 | Lever, Governor | 1 |
| 8 | 31335 | Clamp, Governor Lever | 1 |
| 9 | 650548 | Screw, Hex Slotted Washer Hd. | 1 |
| 10 | 33900 | Crankshaft | 1 |
| 12 | 32323 | Washer, Thrust | 1 |
| 13 | 33562 | Piston & Pin Assembly (Incl. 2 of # 14) (Standard) | 1 |
| 13 | 33563 | Piston & Pin Assembly (Incl. 2 of # 14) (.010 Oversize) | 1 |
| 13 | 33564 | Piston & Pin Assembly (Incl. 2 of # 14) (.020 Oversize) | 1 |
| 14 | 20381 | Ring, Piston Pin Retaining | 2 |
| 15 | 33567 | Ring Set, Piston (Standard) | 1 |
| 15 | 33568 | Ring Set, Piston (.010 Oversize) | 1 |
| 15 | 33569 | Ring Set, Piston (.020 Oversize) | 1 |
| 16 | 32875 | Rod Assembly, Connecting (Incl. # 17 & 18) | 1 |
| 17 | 32610 | Bolt, Connecting Rod | 2 |
| 18 | 32609 | Plate, Lock | 1 |
| 20 | 27241 | Lifter, Valve | 2 |
| 21 | 33553 | Camshaft (Mech. Compression Release) | 1 |
| 22 | 29914 | Pump Assembly, Oil | 1 |
| 24 | *26750A | Gasket, Mounting Flange | 1 |
| 25 | 33901 | Flange Assembly, Mounting (Incl. # 27, 28, 29 & 30) | 1 |
| 26 | *28833 | Gasket, Oil Drain Plug | 1 |
| 27 | 27244 | Plug, Oil Drain | 1 |
| 28 | 27897 | Seal, Oil | 1 |
| 29 | 33885 | Plug, Oil Drain | 1 |
| 30 | 30574 | Shaft, Mech. Governor | 1 |
| 31 | 30590A | Washer, Flat | 1 |
| 32 | 33902 | Gear Assembly, Governor | 1 |
| 33 | 33903 | Spool, Governor | 1 |
| 34 | 29193 | Ring, Retaining | 2 |
| 35 | 650488 | Screw, Hex. Hd. Sems | 6 |
| 36 | 29314A | Valve, Intake (Standard) (Incl. # 38, 39 & 40) | 1 |
| 36 | 29315B | Valve, Intake (1/32" Oversize) (Incl. # 38, 39 & 40) | 1 |
| 37 | 29313B | Valve, Exhaust (Standard) (Incl. # 38, 39 & 40) | 1 |
| 37 | 29315B | Valve, Exhaust (1/32" Oversize) (Incl. # 38, 39 & 40) | 1 |
| 38 | 31671 | Cap, Upper Valve Spring | 2 |
| 39 | 31672 | Spring, Valve | 2 |
| 40 | 31673 | Cap, Lower Valve Spring | 2 |
| 41 | 650489 | Screw, Hex. Hd. Sems w/flatwasher | 2 |
| 42 | 610118 | Cover, Spark Plug | 1 |
| 43 | 33731 | Body, Breather Tube | 1 |
| 44 | 33732 | Valve, Check | 1 |
| 45 | 33733 | Baffle, Breather | 1 |
| 46 | 33734 | Element, Breather | 1 |
| 47 | *33735 | Gasket, Breather | 1 |
| 48 | 33737 | Cover, Breather | 1 |
| 49 | 650768 | Screw, Hex.Hd. w/Conical Washer | 2 |
| 50 | 33886 | Tube, Breather | 1 |
| 51 | 33887 | Clip, Breather Tube | 1 |
| 52 | 33888 | Wire, Ground | 1 |
| 53 | 27247 | Key, Flywheel | 1 |
| 54 | 32723 | Pulley, Starter | 1 |
| 55 | 650490 | Washer, Belleville | 1 |
| 56 | 650607 | Nut, Flywheel | 1 |
| 57 | *33554 | Gasket, Cylinder Head | 1 |
| 58 | 33016 | Head, Cylinder | 1 |
| 59 | 26073 | Washer | 8 |
| 60 | 6021 | Screw, Hex. Hd. Cap | 5 |
| 61 | 650697 | Screw, Hex. Hd. Cap | 3 |
| 62 | 33892 | Spacer | 3 |
| 63 | 30593 | Clip, Magneto Wire | 1 |
| 64 | 33636 | Plug, Spark (Champion J-8 or equivalent) | 1 |
| 65 | *27234 | Gasket, Valve Spring Cover | 1 |
| 66 | 32755 | Cover, Valve Spring Box | 1 |
| 67 | 650128 | Screw, Fil. Slotted Hd. Sems | 2 |
| 67A | 33932 | Terminal | 1 |
| 68 | *30188 | Gasket, Intake Pipe | 1 |
| 69 | 33004 | Pipe, Intake | 1 |
| 70 | 650451 | Screw, Fil. Flex Hd. Self-Locking | 2 |
| 71 | *31688 | Gasket, Carburetor | 1 |
| 72 | 6202 | Screw, Hex Hd. Cap, Sems | 2 |
| 73 | 29752 | Nut & Lockwasher | 2 |
| 74 | 32342 | Line, Fuel | 1 |
| 75 | 26460 | Clamp, Fuel Line | 2 |
| 76 | 29443 | Clip, Fuel Line | 1 |
| 77 | 33086 | Lever, R.P.M. Adjusting | 1 |
| 78 | 33933 | Terminal | 1 |
| 79 | 29666 | Screw, Phil. Fil. Hd. Self-Tap. | 1 |
| 81 | 33133 | Link, Governor | 1 |
| 82 | 33295 | Link, Governor Spring | 1 |
| 83 | 31361 | Spring, Governor | 1 |
| 85 | 33907 | Housing, Blower | 1 |
| 86 | 650497 | Screw, Flex Pan Hd. | 2 |
| 88 | *30081 | Gasket, Exhaust | 1 |
| 89 | 33893 | Tube, Oil Filler | 1 |
| 90 | 33894 | Dipstick, Oil (Incl. # 91) | 1 |
| 91 | 33590 | "O" Ring | 1 |
| 92 | 33895 | Body, Air Cleaner | 1 |
| 93 | 33896 | Filter, Air | 1 |
| 94 | 33897 | Cover, Air Cleaner | 1 |
| 95 | 650762 | Screw, Fil. Hd. Mach. Sems. | 2 |
| 96 | 650784 | Screw, Hex. Hd. w/Flatwasher Thr'd Forming. | 1 |
| 97 | *33051 | Gasket, Air Cleaner | 1 |
| 98 | 33904 | Tank, Fuel | 1 |
| 99 | 28763 | Screw, Hex Washer Hd. Thr'd Forming. | 2 |
| 100 | 590343 | Rope Assy., Starter | 1 |
| 107 | 610900 | Magneto | 1 |
| 108 | 631831 | Carburetor | 1 |
| 110 | 33906 | Gasket Set (Incl. Items Marked*) | 1 |

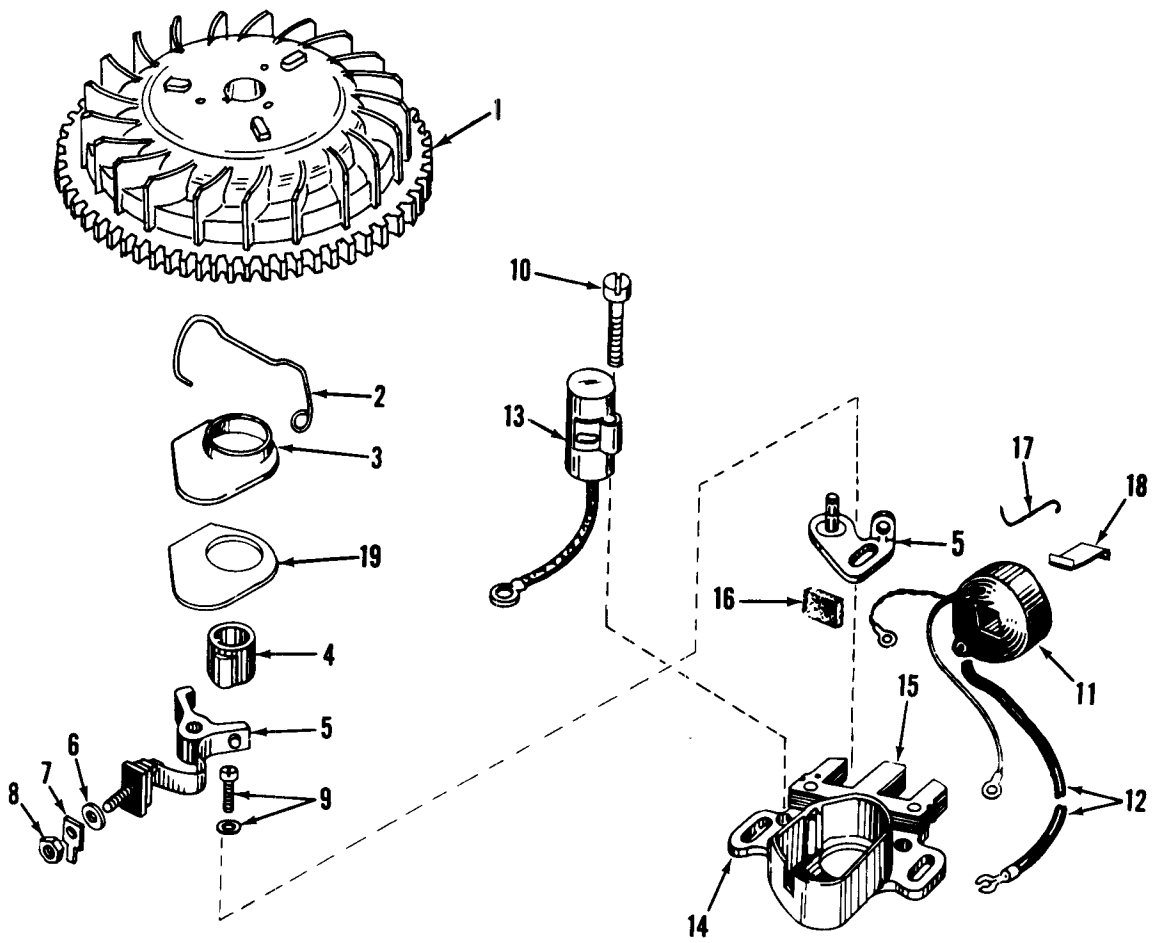


# MAGNETO NO. 610900
## (MOWER MODEL NO. 20660)

| Ref. No. | Part No. | Description | No. Used |
|---|---|---|---|
| 1 | 610899 | Flywheel | 1 |
| 2 | 30551 | Spring, Breaker Box | 1 |
| 3 | 30550 | Cover, Breaker Box Dust | 1 |
| 4 | 30992 | Cam, Breaker | 1 |
| 5 | 30547A | Contact Assy., Breaker | 1 |
| 6 | 610385 | Washer, Terminal | 1 |
| 7 | 30843 | Tab, Ground Terminal | 1 |
| 8 | 610408 | Nut, Terminal | 1 |
| 9 | 29181 | Screw & Washer, Breaker | 1 |
| 10 | 610593 | Screw, Condenser Fastening | 1 |

| Ref. No. | Part No. | Description | No. Used |
|---|---|---|---|
| 11 | 30560A | Coil Assy. (Incl. # 12) | 1 |
| 12 | 30554 | Wire, Lead | 1 |
| 13 | 30548A | Condenser | 1 |
| 14 | 30545 | Core & Plate | 1 |
| 15 | 30561A | Stator Assy. (Incl. # 2, 3 & 5 thru 14 & 16 thru 19) | 1 |
| 16 | 30549 | Felt, Cam Wiper | 1 |
| 17 | 31311 | Clip, Coil Locking | 1 |
| 18 | 29629 | Spring, Coil Wedge | 1 |
| 19 | 32052 | Gasket, Dust Cover | 1 |

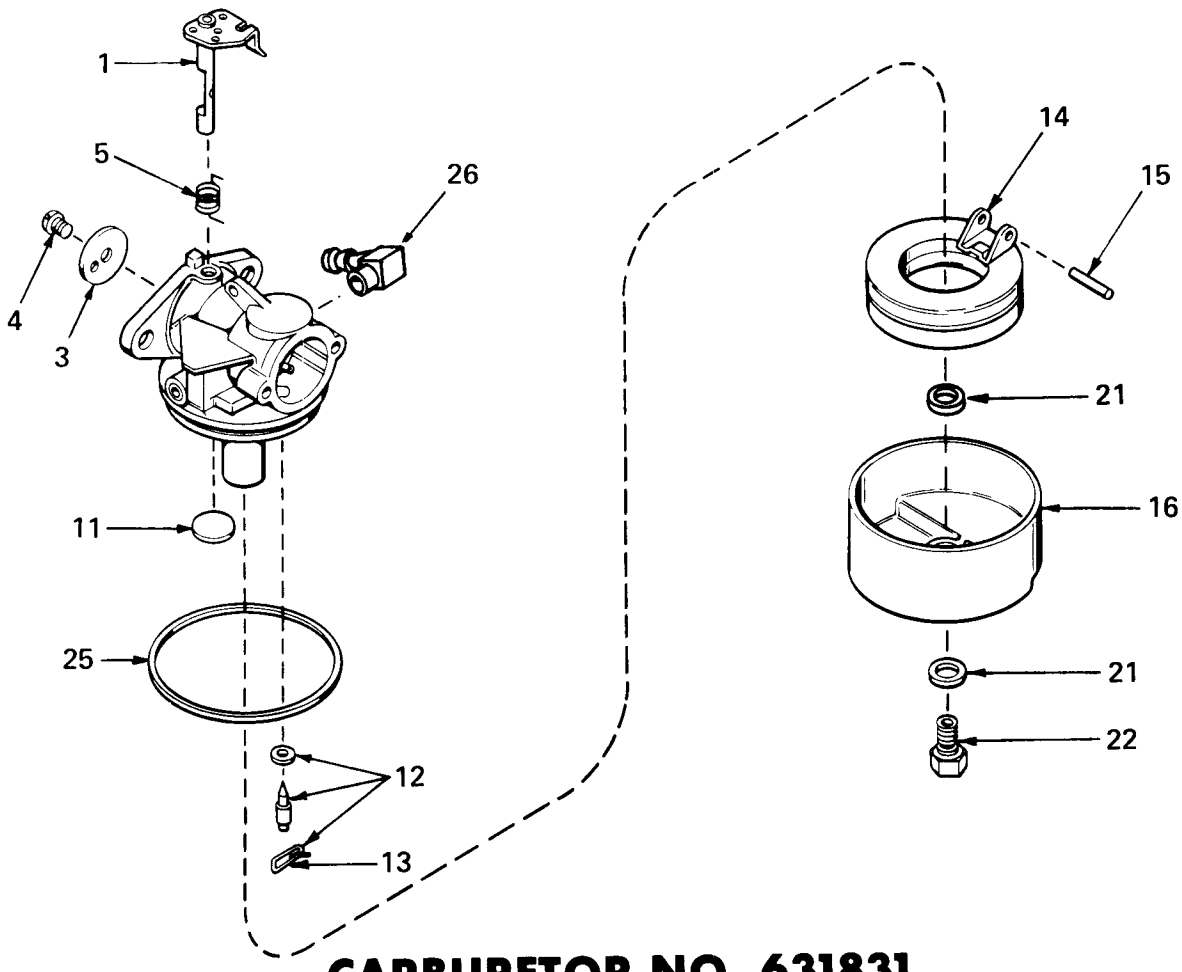


# CARBURETOR NO. 631831

## (MOWER MODEL NOS. 20440, 20550 AND 20660)

| Ref. No. | Part No. | Description | No. Used |
|---|---|---|---|
| 1 | 631615 | Shaft & Lever Assy., Throttle | 1 |
| 3 | 631616 | Shutter, Throttle | 1 |
| 4 | 650506 | Screw | 1 |
| 5 | 630731 | Spring, Return | 1 |
| 11 | 631027 | Plug, Welch | 1 |
| 12 | 631021 | Inlet Needle, Seat & Clip Assy. (Incl. # 13) | 1 |
| 13 | 631022 | Clip, Inlet Needle | 1 |

| Ref. No. | Part No. | Description | No. Used |
|---|---|---|---|
| 14 | 631023 | Float, Carburetor | 1 |
| 15 | 631024 | Shaft, Float | 1 |
| 16 | 631700 | Bowl Float | 1 |
| 21 | 631334 | Gasket, Bowl-to-Body | 2 |
| 22 | 631617 | Nut, Float Bowl | 1 |
| 25 | 631028 | Gasket, Bowl-to-Body | 1 |
| 26 | 631807 | Fitting, Fuel Inlet | 1 |

# PRODUCT CHANGES

In an effort to make improvements available to TORO owners as quickly as possible, minor changes are incorporated into Toro's products from time to time that do not become immediately shown in the Parts Catalog. If such a change apparently has been made in your unit, which is not reflected in your manual, see your TORO distributor or his Authorized TORO Service Dealer for information and part numbers.

# IMPORTANT ORDERING INSTRUCTIONS

Repair parts are available from your Authorized TORO Service Dealer. To insure getting correct parts without delay, furnish the following information:

1. Serial number of your mower as shown on the name plate.
2. Part number, description, and quantity of each part required.
3. State whether parts should be shipped by mail or express. All repair parts are shipped F.O.B. Factory.
4. Name and address where parts are to be shipped.
5. Do not order by reference number; use part number only.

# THE TORO PROMISE

It is Toro's policy to design and produce TORO products to provide our customers with a high level of performance and durability in normal operation. Our products, however, are produced in high volume, and it is inevitable that occasionally a unit will reach a customer with a defect in materials or workmanship which causes that unit to fall below the normal high level of TORO performance. Invariably, such a defect will be noticed in a residential product within one year, and in an institutional product within ninety days after purchase. Recognizing this possibility, Toro has established a simple guarantee policy and procedure that is intended to assure customer satisfaction. This guarantee statement is as follows:

## The Toro Promise

*The Toro Company promises to repair any TORO product for the original purchaser if defective in materials or workmanship. The following time periods from the date of purchase apply:*

| | |
|---|---|
| Residential products | 1 year |
| Residential products used commercially | 45 days |
| Institutional products | 90 days |

*The costs of parts and labor are included, but the customer pays the transportation costs. Just return any residential product to an Authorized TORO Service Dealer, or any institutional product to a TORO distributor.*

Should you feel that a product is defective, and wish to rely on The Toro Promise, the following procedure is recommended:

1. Contact any TORO dealer or distributor, but preferably the dealer or distributor from whom you purchased the product.
2. He will instruct you to either return the product to him, or tell you the name and address of your nearest Authorized TORO Service Dealer if the product is to be returned to such dealer.
3. Take the product and your original sales slip, or other evidence of purchase date, to the servicing dealer.
4. The servicing dealer will inspect the unit, advise you whether the product is defective and, if so, make all repairs necessary to correct the defect without extra charge to you.

If for any reason you are dissatisfied with the dealer's analysis of the defect or the service he performs, we urge you to contact us. Write:

TORO "Customer Care" Department
8111 Lyndale Avenue South
Bloomington, Minnesota 55420

# MAINTENANCE RECORD

| Date | Hours Used | Oil Change | Air Cleaner Service | Lubrication | Winter Storage | Spring Service | Spark Plug Gap |
|---|---|---|---|---|---|---|---|
| | | | | | | | |
| | | | | | | | |
| | | | | | | | |

# MAINTENANCE RECORD

| Date | Hours Used | Oil Change | Air Cleaner Service | Lubrication | Winter Storage | Spring Service | Spark Plug Gap |
|---|---|---|---|---|---|---|---|
| | | | | | | | |
| | | | | | | | |
| | | | | | | | |