FORM NO. 3325-766

Comb Kit

For Reelmaster ® 5000 Series Cutting Unit

Part No. 104-3385

Installation Instructions

1. Place mower on a level surface.
2. Remove capscrew and flange nut securing each end of front roller to roller brackets. Discard capscrews and flange nuts.
3. Thread a flange nut onto each capscrew as shown in figure.

Note: Comb assembly is loosely assembled at the factory. Do not tighten locknuts at this time.

4. Mount each end of comb assembly to top of each roller bracket with (2) washers and flange nut and capscrew as shown in figure.

Note: Washers are not required if cutting unit is equipped with a Wiehle Roller Scraper. Mount comb assembly on top of scraper ends.

5. Make sure roller and comb assembly are secure and centered in roller brackets, then tighten flange nuts.
6. Using a gauge bar and ruler, set comb aggressiveness to meet your turf conditions. Do not over adjust.

- Comb range is approximately 0.25” to 0.62”.
- Less aggressive setting = Height of Cut Setting
- More aggressive setting = 1/8” Below Height of Cut Setting

Note: It may require a few weeks of operation to remove excess grain in turf.

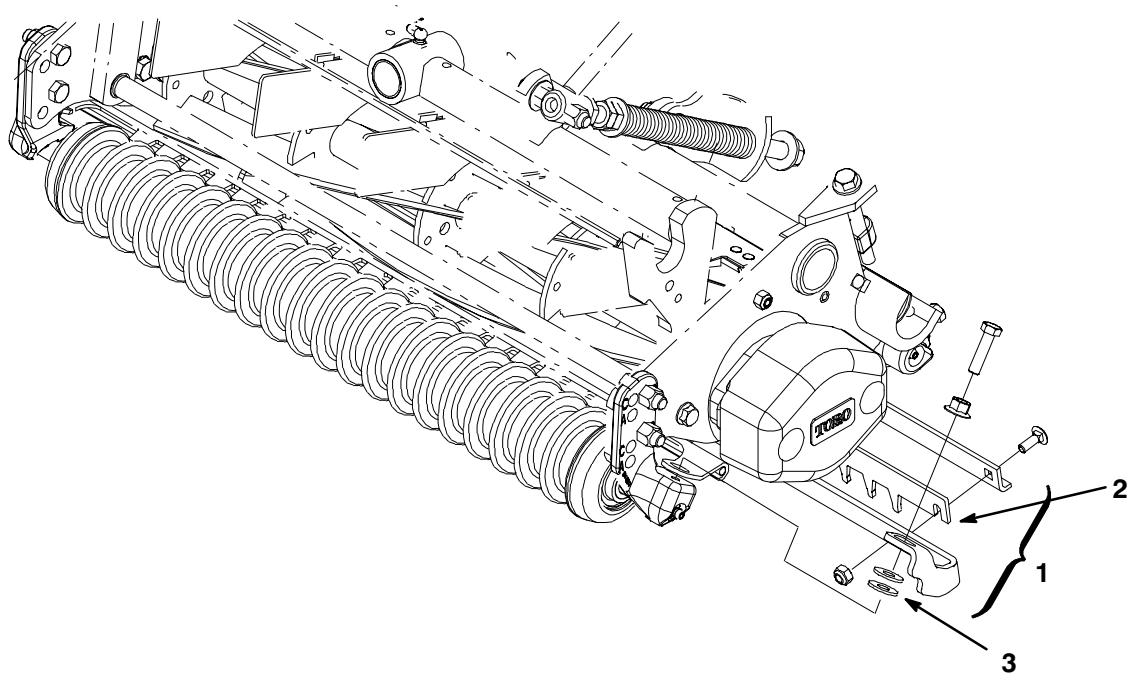

Figure 1

1. Comb assembly
2. Comb
3. Washers (if required)

©The Toro Company - 2000
All Rights Reserved