FORM NO. 3325–768

TORO®

PART NO. 104–8205

INSTALLATION INSTRUCTIONS

FRONT HEIGHT OF CUT KIT

Reelmaster® 5000 Series Cutting Unit

Note: The installation of this kit allows for variable adjustment to cutting unit attitude in the 1/4" to 1–3/8" height of cut range. Some components may already be pre–assembled at the factory.

1. Remove (2) capscrews and nuts securing each front roller bracket to cutting unit side plates (Fig. 1).

2. Loosen nut and capscrews securing each end of roller to roller brackets (Fig. 1). Remove roller from brackets.

3. Mount a height of cut bracket to each cutting unit sideplate with (2) capscrews. Position brackets as shown in figure 2.

4. Thread a cone nut (flat side down) onto each support rod until there is about 1/2" from flat side of nut to lower end of threaded rod (Fig. 2).

5. Insert a rod support onto each end of roller (Fig. 2).

6. Insert rod supports into height of cut brackets and loosely secure each with cone nut (flat side up). Position rod supports as shown in figure 2.

7. Center roller between rod supports and tighten fasteners.

8. Refer to Cutting Unit Operator's Manual for adjustment procedures.

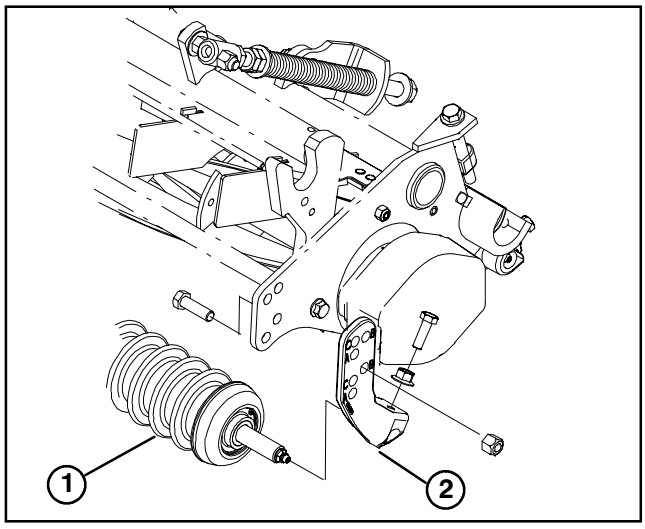

Figure 1

1. Front roller
2. Roller bracket

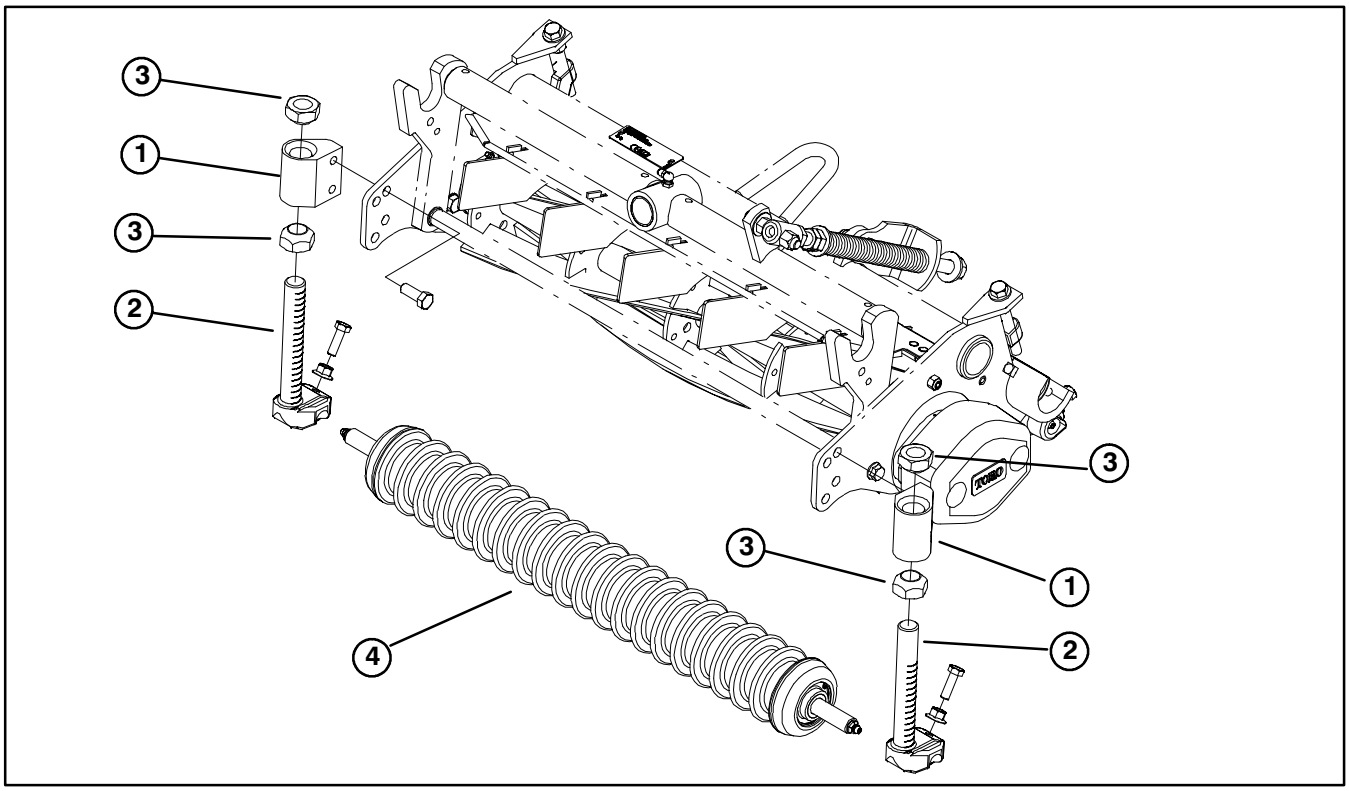

Figure 2

1. Height of cut bracket
2. Rod support
3. Cone nut
4. Front roller

© The TORO Company – 2000