8-10-12 HP 1967

TORO®

OWNER'S OPERATING AND PARTS MANUAL



SUBURBAN TRACTORS

Models 55200 - 55300 - 55400

(SERIAL NOS. 700001 AND UP)

PRICE 25c

SAFETY TIPS FOR RIDING LAWN MOWERS, GARDEN TRACTORS AND ATTACHMENTS

Improper use of riding lawn mowers, garden tractors and attachments on the part of the operator can result in injury. To reduce this possibility, give complete and undivided attention to the job at hand.

1. Know the controls and how to stop quickly — READ THE OWNER'S MANUAL.

2. Do not allow children to operate machine; nor adults to operate it without proper instruction.

3. Clear work area of objects which might be picked up and thrown.

4. Disengage all clutches and shift into neutral before starting motor. Keep hands, feet and clothing away from power driven parts.

5. Do not carry passengers. Keep children and pets a safe distance away.

6. Never direct discharge of any material toward bystanders nor allow anyone near machine while in operation.

7. Disengage power to any attachment and stop motor before leaving operator position.

8. Take precautions when leaving machine unattended (to avoid accidental starting, rolling away, accidental dropping of any attachment, etc.)

9. Disengage power to any attachment whenever it is not in use or when traveling from one work area to another.

10. Stay alert for holes and other hidden hazards.

11. Know what is behind you before backing up.

12. Beware of steep slopes, reduce speed on all side slopes and sharp turns to prevent tipping or losing control.

13. Don't stop or start suddenly when going uphill or downhill.

14. Do not drive close to a ditch or creek.

15. Do not attempt to operate the machine when you are not in the driver's seat.

16. Do not attempt to get off of the machine while it is moving.

17. Use extra care when pulling loads or using heavy equipment. (Refer to your owner's manual.)

18. Watch out for traffic when near roadways.

19. Handle gasoline with care — it is highly flammable.

   A. Use approved gasoline container.

   B. Never add gasoline to a running motor — fill tank out of doors and wipe up spilled gasoline.

   C. Replace gasoline cap securely.

   D. Open doors if motor is run in garage — exhaust gases are dangerous.

20. Keep machine in good operating condition and keep safety devices in place. Use guards as instructed in owner's manual.

21. Disengage power to any attachment and stop motor before making repairs or adjustments.

These safety suggestions are recommended by Outdoor Power Equipment Institute and Toro Mfg. Corp.

Copyright 1966 by
Toro Manufacturing Corporation
Minneapolis, Minnesota 55420
U.S.A.

Outdoor Power Equipment Institute, Inc. SPONSORED

CONFORMS TO SAFETY ASA STANDARD

PRODUCT CHANGES

In an effort to make improvements available to Toro owners as quickly as possible, minor changes are incorporated into Toro's products from time to time that do not become immediately shown in the Reference Drawing and Parts List. If such a change apparently has been made in your unit, which is not reflected in your manual, see your Toro distributor or his authorized Toro service dealer for information and parts numbers.

IMPORTANT ORDERING INSTRUCTIONS

Repair parts are available from your TORO distributor. To insure getting correct parts without delay, please furnish the following information:

1. Serial number of your product as shown on the name plate.
2. Part number, description and quantity of each part required.
3. Name and address where parts are to be shipped.
4. Do NOT order by reference number, use part number only.

Warranty

The Manufacturer warrants each new piece of equipment sold to be free of defects in material and workmanship. For one year from the purchase date of consumer line equipment or 45 days if sold for commercial use, Toro Manufacturing Corporation will repair or replace for the original purchaser, free of charge, through any Authorized Service Dealer, any part or parts found at our factory in Minneapolis, Minnesota, to be defective under normal use and service. All institutional equipment is warranted for ninety (90) days from the purchase date.

This Warranty does not obligate the Manufacturer to bear the cost of transportation charges in connection with the replacement or repair of defective parts -- nor shall it apply to a machine upon which repairs or alterations have been made, unless authorized by the manufacturer.

This Warranty does not include nor cover standard accessories produced by other manufacturers. Such accessories have separate warranties by their respective manufacturers . . . and repair or exchange will be made on the basis of such warranties, and the policies authorized by them shall be adhered to.

This Warranty is in lieu of all other warranties expressed or implied.

TABLE OF CONTENTS

Section	Page
GET YOUR TRACTOR READY TO WORK	3
General	3
Put It Together Easily	3
Attach the Mower Attachment	4
GET ACQUAINTED WITH YOUR NEW TRACTOR	5
General	5
Learn the Controls	5
Use the Right Gasoline and Oil	5
Start the Engine	5
Stop the Engine	5
Break-in Engine and Transmission	5
Operate the Tractor	5
Emergency Winter Operation	6
THINK OF SAFETY BEFORE YOU USE TRACTOR	6
PUT YOUR TRACTOR TO WORK	7
Choose Right Cutting Height	7
How to Set Cutting Height	7
Use Correct Speed	7
Save Mowing Time With Planning	7
Observe Tractor Limits	7
ATTACHMENTS INCREASE YOUR TRACTOR'S USEFULNESS	9
Mulcher Screen	9
Ground Engaging Tools	9
Snow Removal Attachments	9
Other Attachments	9
KEEP YOUR TRACTOR WORKING FOR YOU	9
Keep It Properly Lubricated	9
Keep the Blades Sharp and Balanced	9
How to Obtain Service	11
Engine	11
Tire Pressure	11
Adjustments	11
Electrical System	11
Battery	11
Preparation for Storage	11
REMOVAL AND REPLACEMENT OF PARTS	12
Blades	12
Mower Attachment	12
Belts	12
Blade Belts	13
Transmission	13
Engine	13
Replacement of Miscellaneous Parts	13

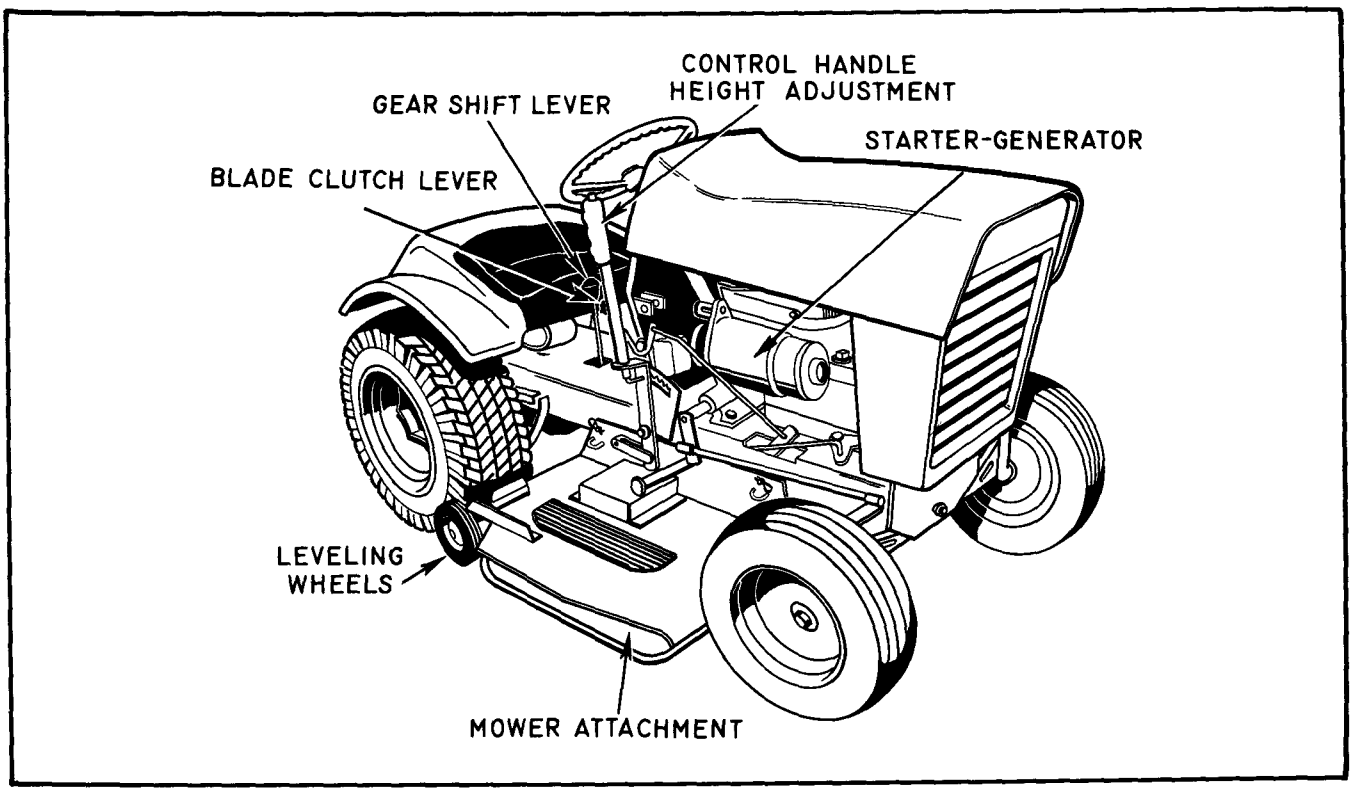

Figure 1. Assembly of Tractor Viewed from Right Side

GET YOUR TRACTOR READY TO WORK

GENERAL

Your tractor and mower has been shipped almost completely assembled except for the wheels, steering wheel, seat, battery and mower attachment. Follow the assembly instructions carefully and check and lubricate the tractor before using according to the information given in this Owner's Guide.

Operate the tractor without load for 1/2 hour and with light load for the first hour. Operate it in each of the three speeds forward as well as in reverse during this break-in period. Change the engine oil after the first five hours and every 25 hours thereafter.

The engine is shipped without oil in the crankcase. Check the engine before starting for the proper type and amount of oil in the crankcase.

PUT IT TOGETHER EASILY

The tractor may be easily assembled as follows: (See figures 1 and 2.)

1. The four wheels are shipped disassembled from the tractor and can be put on quickly. The two small front wheels should be slipped over the front axles, with the air valves on the outside, after first removing the cotter pin and one of the three washers on the axle. After the wheels are in place, then slide the washer back over the axle, reinsert the cotter pin and bend it in place. Press hub cap in place.

2. The two large rear wheels, can be assembled by removing the three machine screws and nuts which are in the rear wheel hubs, then aligning three of the machine screw holes in the wheel to the hub, replacing the machine screws and tightening. Lock the machine screws with the nuts. The air valves are on the inside of the wheel.

3. The steering wheel is loose in the carton and can be fastened quickly to the steering post. Slide it into the post and line up the holes. Fasten securely to the post with the roll pin provided.

4. Attach the seat with the (4) carriage bolts, (4) lockwashers, and (4) nuts furnished.

5. Remove the three machine screws found at the rear of the tractor chassis just below the seat. Place the hitch in position and tighten nuts.

6. The leveling wheels can be assembled quickly to the brackets at the rear of the mowing attachment with the axles and nuts furnished.

7. One mower attachment roller is shipped disassembled. Remove the cotter pin and rod in welded bracket at the front of the mower attachment. Slide wooden roller over the rod and fasten cotter pin back in place.

8. It will be necessary now to activate and mount the battery. Always add the electrolyte to the battery

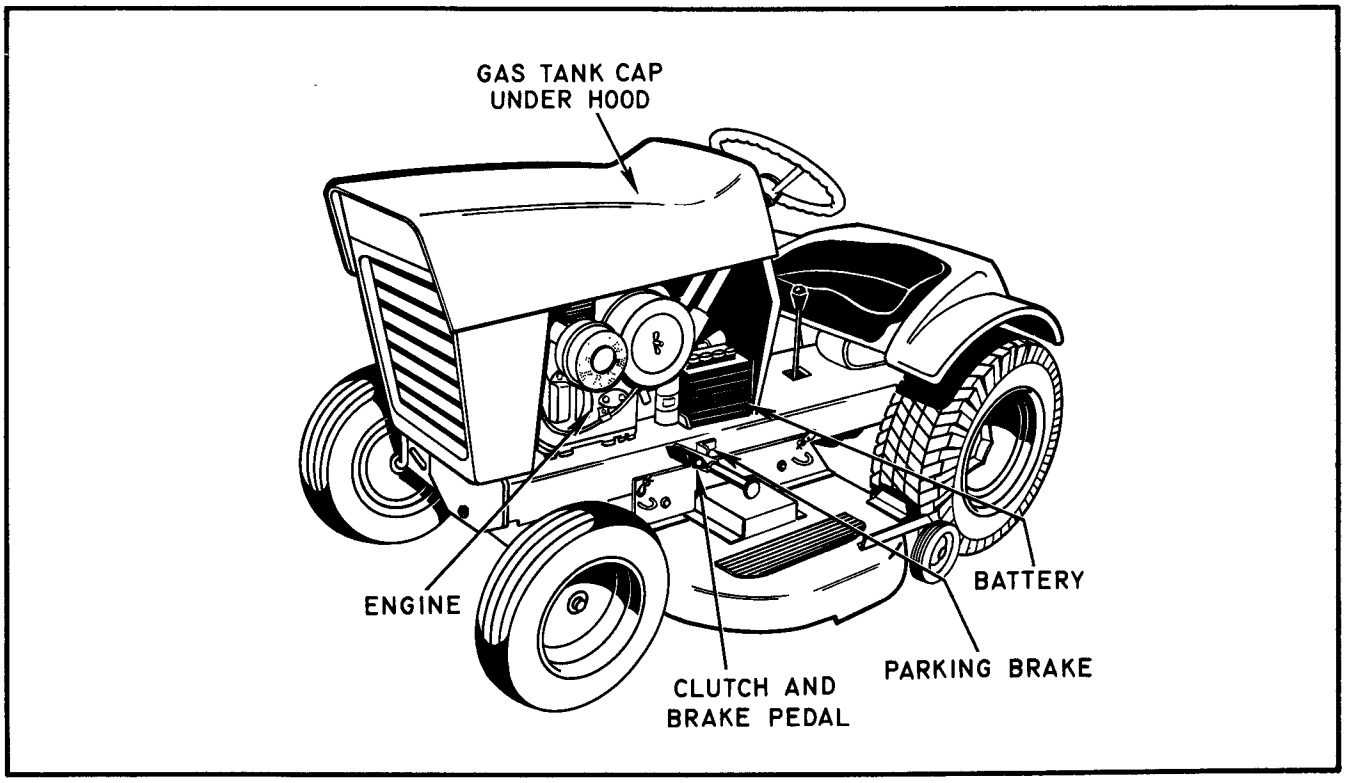

Figure 2. Assembly of Tractor Viewed from Left Side

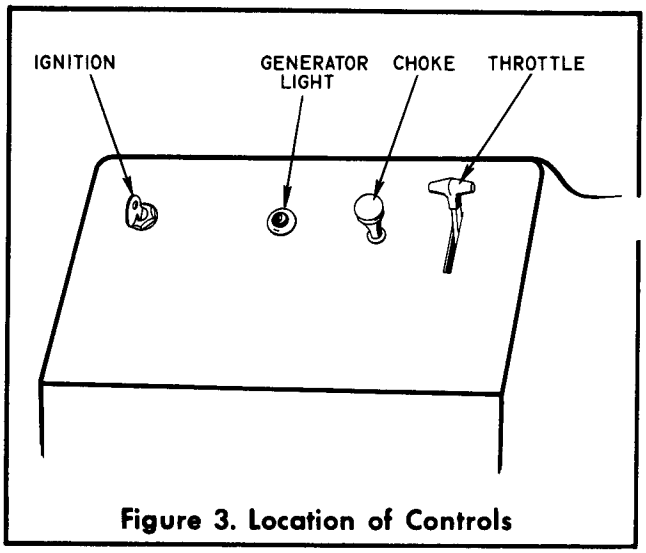

Figure 3. Location of Controls

BEFORE installing on your tractor. Follow the instructions which accompany the battery for the proper procedure of activation. Use the bolts and hold-down clamp provided and place the battery in position as shown with battery terminals toward inside of tractor. Now hook the ground wire, which is the heavy wire attached to the engine base, to the yellow or negative post of the battery. The other heavy wire running from the starter solenoid should be connected to the red or positive post. Coat the battery terminals with petroleum jelly to prevent corrosion.

ATTACH THE MOWER ATTACHMENT

1. After the rollers (3) and wheels (2) have been securely attached to the mower housing, position the mower at the left side of the tractor so that it will slide sideways between the front and rear wheels. Be certain that the loose belt is on the center main drive pulley of mower attachment. Turning the tractor wheels as though making a left turn will give more room to get the mower under the tractor.

2. The mower "engage & disengage" lever at the right side of the dash panel must be in the "disengage" position.

3. Slide the mower sideways under the tractor so that the side plates of the mower are lined up with the sides of the tractor chassis and the mower housing is pushed forward against the front wheels.

4. Guide the main drive belt onto the (2) mower drive idler pulleys being sure that the belt is held in position on the pulleys by the belt guides. The belt must go between the tie rod and the chassis (see Figure 4). Extend the belt up thru the chassis and on the large engine pulley at the front of the engine. Keeping the mower well forward will make the belt loose and easy to install.

5. After the main drive belt is threaded over the pulleys push the deck back toward the rear wheels far enough to put the blade brake rod into the hole in the arm that extends down from the tractor chassis at the right side of the engine (Ref. A in Figure 4.). Fasten the rod in place with the cotter pin that is in the rod.

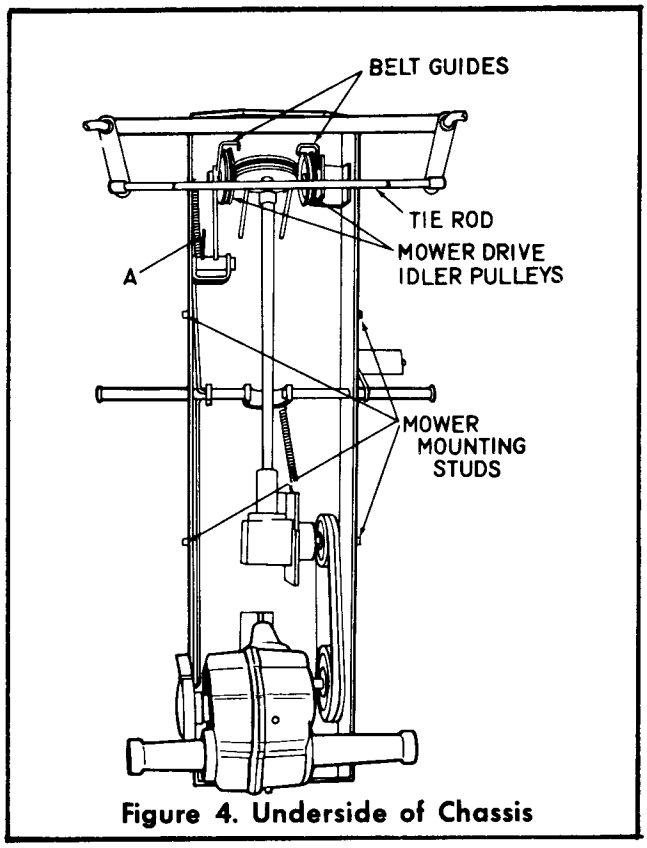

Figure 4. Underside of Chassis

6. Using the (2) loops on the mower side plate lift the side plate, and fit the (2) holes at the top over the (2) studs on the side of the tractor chassis. Fasten with the hairpin provided.

7. Repeat for other side of tractor.

8. Set the tractor lift lever (right side of tractor) at the lowest position "attach", swing the adjusting links up on each side of the lift lever until the holes in the adjusting links line up with the top hole of the lever. Insert the clevis pin and lock with the hairpin.

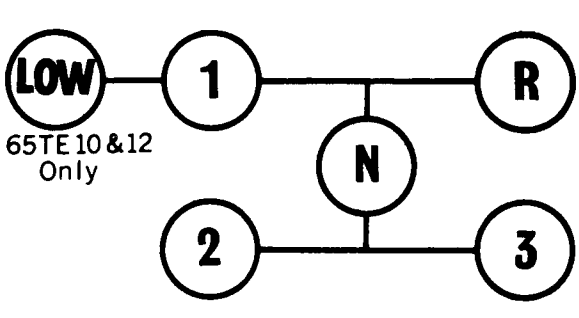

Figure 5. Gear Shift Pattern

GET ACQUAINTED WITH YOUR NEW TRACTOR

GENERAL

1. Become familiar with your tractor before you put it to work. Read these instructions and the engine manufacturer's booklet. Be sure you know what the controls are for, and how they operate. Operate the tractor for a while on a driveway or sidewalk to get the feel of the controls.

2. The amount of care the tractor requires is small but important. Keep it clean and well lubricated. Keep the mower blades sharp and balanced. Learn the capabilities and limitations of your tractor and mower. They are capable of giving you the years of dependable service you expect from any fine piece of machinery.

LEARN THE CONTROLS

These simple controls make your tractor handy to operate. (See figures 1, 2, 3, and 4.)

1. With the choke lever pulled 1/2 the way out, and with the throttle open about 1/2-inch, pushed toward the top of the panel, the engine is ready to start.

2. Turn the key in the ingition switch and this will automatically turn the engine over until it starts.

3. The blade clutch lever starts and stops the operation of the blades.

4. The tractor clutch pedal also operates the tractor brake.

5. Instructions are given for the 3-speed transmission. The 10 & 12 HP have a (4) speed transmission which provide a special low, low gear for more efficient use of the ground engaging accessories.

6. You can change the cutting height by means of the blade height adjustment controls without stopping the engine.

7. To engage parking brake depress clutch and "flip-in" locking strap.

USE THE RIGHT GASOLINE AND OIL

1. Remove the oil filler plug from the engine and fill the crankcase to the level indicated in the engine manual. Use heavy-duty SAE 30W engine oil. Use SAE 10W in below freezing weather.

2. Fill the fuel tank with clean, fresh, regular gasoline. Do not use high test gasoline. Do not mix oil with the gasoline.

3. Check the oil level of the transmission. To check, remove the inspection plug from the front of the transmission casting. The oil should be level with the bottom of the inspection hole. If necessary, add multi-purpose gear lubricant, grade SAE 90W.

START THE ENGINE

CAUTION

Put the gear shift lever in neutral and the blade clutch in the "DISENGAGED" position before starting the engine.

1. Turn on the valve under the fuel tank.

2. Be sure the gear shift lever is in the neutral position and the blade clutch is disengaged.

3. Move the engine control to the choke position and open the throttle slightly.

4. Turn the key in the ignition lock.

5. If a cold engine does not start on the first attempt, try again.

6. When restarting a hot engine, set the throttle control in approximately the middle of its travel area. Do not choke.

STOP THE ENGINE

Turn the key to the "OFF" position.

BREAK-IN ENGINE AND TRANSMISSION

1. Refer to the engine manual before operating your tractor.

2. Operate the tractor without load for 1/2 hour and with light load for the first hour. Operate it in each of the three speeds forward as well as in reverse during this break-in period. Change the engine oil after the first five hours and every 25 hours thereafter.

OPERATE THE TRACTOR

1. With the engine running, press the clutch pedal down with your foot.

2. Move the gear shift lever into the speed you want. (A shifting diagram is applied to the tractor where you can see it as you sit in the seat, or refer to Figure 5.) It isn't necessary to shift from first to second to third gear; you can start from a complete stop in any gear.

3. If you are starting in high gear, slow the engine down a little before letting up on the clutch pedal, then increase the engine speed after the clutch takes hold.

4. If you seem to have any difficulty getting into any gear, jog the clutch pedal a little to get the gears into position where they will mesh. Never force the lever.

5. Always depress the clutch pedal when shifting into or out of gear.

EMERGENCY WINTER OPERATION

If run down batteries are repeatedly experienced due to short or infrequent operation at low temperatures, it is advisable to temporarily increase the generator charge rate. A simple method of increasing the charge rate is to disconnect the lead to the regulator (B) terminal and reconnect this lead to the regulator (L) terminal. This bypasses the current-voltage feature of the regulator automatically increasing the amount of charge of the battery.

CAUTION

Connect the regulator in this manner only during cold weather when operating periods are short or infrequent. Re-establish the original lead connections as soon as mild weather returns or operating time becomes normal; otherwise the battery will be damaged by overcharge. Check battery electrolyte level frequently. Excessive water consumption indicates overcharging.

THINK OF SAFETY BEFORE YOU USE TRACTOR

The mower blades use considerable horsepower, therefore, the mowing attachment is a powerful cutting tool. Treat it with respect. Before you use the mower, be sure you know the safety rules.

1. Never allow children or anyone else to operate the mower without proper instructions. Keep children and pets away from the area of the mower at all times while it is working.

2. Always keep hands and feet out from under the mower deck while the engine is running and until you are SURE that the blades have stopped turning after the engine is shut off or the blade clutch disengaged. They will coast for several seconds.

3. Before you start mowing, walk over the area you are going to cut and pick up all debris which could be picked up and thrown by the blades. Sticks, stones and pieces of metal are a hazard to the mower and can be dangerous to pets and people.

4. Know how to stop the mower and the tractor engine instantly.

5. When moving the tractor along paths and walks, and at all times when not actually cutting grass, keep the blade clutch disengaged.

6. Don't attempt any service operations while the engine is running. Disconnect the spark plug wire to prevent accidental starting.

7. When mowing high grass or weeds, start with the mowing attachment at its highest position. This lessens the danger of striking hidden objects. Then take a second cut after first checking to be sure there are no obstructions.

8. Fill the gasoline tank outdoors. Avoid spilling gasoline. Don't smoke while filling the tank.

9. Stop the engine and disengage the blade clutch whenever you leave the tractor.

DIVIDE LARGE OR IRREGULAR AREAS INTO TWO SECTIONS FOR EASIER MOWING

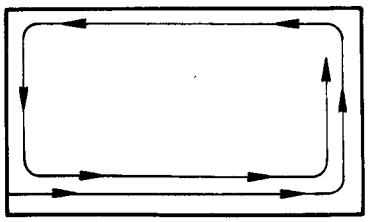

NORMAL ROUND AND ROUND METHOD FOR LARGE EASY AREAS

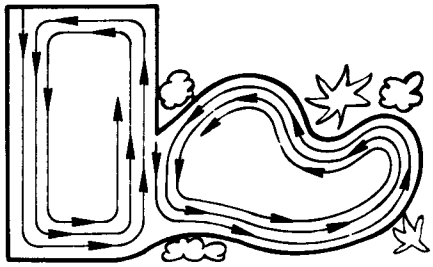

OVER-LAP IN TIGHT CORNERS TO GIVE YOURSELF ROOM TO TURN

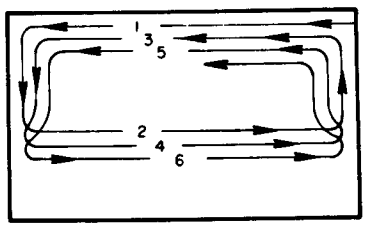

IT'S POSSIBLE TO CUT SMALL AREAS WITHOUT LOSING TIME IN TURNING IN THE MIDDLE

Figure 6. Grass Cutting Pattern

PUT YOUR TRACTOR TO WORK

CHOOSE RIGHT CUTTING HEIGHT

1. In general use the same cutting height you have used before. You know what height is best for your own lawn.

2. When first using your mower, cut the grass a little longer than you did before until you are sure that the greater cutting width will not cause scalping due to irregularities in the lawn.

3. If the grass is high, or if it contains lots of moisture, take a first cut with the blades set high. Then finish cutting with the lower blade setting. This gives better distribution of the clippings and provides a cleaner second cut.

4. It is possible, by using care, to cut grass that is extremely high or wet. Set the blades at their highest position, and use the lowest drive speed. Move into the area cautiously. Take a cut, if necessary, only half the width of the mower at each pass. Wet clippings may clog the mower housing, causing the blade to stall and the belts to slip and wear. If this happens it will be necessary to stop and clean the discharge. Be sure to stop the engine.

HOW TO SET CUTTING HEIGHT

1. The height of cut is very easily set or changed by using the handle provided as illustrated. The blades may be set at 2, 2-1/2, 3, 3-1/2, and 4 inches.

2. To lower the blades, place your right thumb on top of the hand lever, release the pressure and the entire mower housing will drop slightly. You can now set the mowing height in the position that you want. Each time you move from one position to another in the lever engaging plate the blades raise or drop 1/2-inch.

3. It may be necessary to adjust the leveling wheels, which are a part of the mower attachment, when the cutting attachment is lowered to the 2 and 2-1/2 inch cutting positions to prevent scalping. The leveling wheels should be in the top hole of the wheel bracket at the 2 inch cutting height position and in the bottom hole when operating the mower attachment at 2-1/2 inches and higher.

CAUTION

Be sure engine is stopped before adjusting position of leveling wheels.

USE CORRECT SPEED

1. Use low gear for pulling heavy loads, for mowing in high grass and for mowing while climbing hills. This allows the blades to maintain constant RPM, and delivers most of the horsepower to the blades. Low gear also gives you maximum control while trimming.

2. Use second gear for mowing level areas and for climbing hills when you are not using the blades. If second gear results in uneven mowing due to the condition of the grass, shift to low gear.

3. High gear gives a speed of about six miles per hour on a level hard surface. Use it for transporting the tractor to and from work. Mowing in high gear will be uneven because at this speed the blades do not have time to lift each blade of grass into cutting position. In addition, so much of the engine's horsepower is absorbed in forward motion that it is comparatively easy to stall the blade.

4. Slow down on turns to avoid sliding sideways.

5. Reverse is just a little slower than second gear. The mower will cut equally well in either forward or reverse.

6. To avoid jerky starts, release the clutch pedal slowly after shifting.

SAVE MOWING TIME WITH PLANNING

1. Changing direction wastes time. Plan to keep the mower moving forward as much as possible. (See figure 6.)

2. Plan for the longest straight runs possible.

3. Save close trimming for the cleanup.

4. Try to work with the clippings discharging on to the already cut areas, to prevent build-up of clippings which could impose an extra load on the blade, or cause uneven mowing because they prevent the grass from rising into the cutting path of the blade.

5. Sometimes it's easier to divide a larger irregular shaped area into smaller sections to keep the mower working more steadily, or to keep from backing, turning or repeating too often.

6. In a small area, where tight turns would cause lost time in the center if the normal round and round methods were used, try the cutting method shown in the illustration (figure 6). Make the second pass down the center of the area, rather than down the opposite side from the first pass. This allows you to swing wide at the end of each pass, and still cut all of the grass without too much reversing.

7. Try to avoid steep hills. The tractor will normally carry a 200 pound operator up a 30^0 grade while cutting grass.

OBSERVE TRACTOR LIMITS

Observing the limits of the tractor and mower will help it serve you longer. Overload and mistreatment can shorten its life or impair its usefulness, just as they can with any tool or machine.

1. The engine is not guaranteed on a slope of more

than 45 degrees in any direction, as it cannot receive proper lubrication.

2. Keep the mower clean, especially around the blades. A build-up of grass clippings in the blade housing can impair the efficiency of the mower and cause uneven cutting.

3. It is possible, when using your rotary mower attachment on the tractor, to develop an irregular cutting pattern if you operate the tractor using too fast a forward speed. Also, unevenness of cut, skipping or stepped effect on turns, or streaks or uncut portions of grass in the middle may be noticed if too fast a forward speed is used. That is why your tractor is equipped with a three or four speed transmission, so that you will have a selection of forward speeds to choose from, depending on your specific grass cutting job. Best results are always obtained in first (slowest) speed.

4. The discharge opening of the mower attachment has been constructed to allow for maximum discharge of grass cuttings under normal operating conA protective shrub bar has been provided across the discharge opening; Do Not, under any circumstances, impair the safe operation of your tractor by removing it.

5. Avoid pulling loads that are so heavy they cause the drive belt to slip or wheels to spin.

6. If tractor stalls due to an overload, but the engine continues to run, shift immediately to neutral and start out again slowly. Failure to do this will cause excessive belt wear or breakage.

7. If the engine stalls due to overload, disengage the blade clutch and shift into neutral before restarting. Then, find out what caused the overload and avoid it to make it easier when starting out again.

8. When using any of the ground engaging attachments always use either the first forward speed or 2nd, not 3rd or 4 th; these attachments are developed to use the maximum power delivered by your tractor and this can only be obtained in first or second forward speed and maximum engine RPM.

Figure 7. Condition and Suggestion Chart

CONDITION	SUGGESTION
(a) When cutting high weeds.	(a) Cut high weeds in the 4 inch cutting position, use first forward speed, and stop occasionally to allow the discharge to clear itself.
(b) When cutting wet, lush grass.	(b) Cut wet lush grass in 3-1/2 or 4 inch cutting position once, and then lower deck to desired cutting height and re-cut.
(c) When attempting to cut high stand of heavy grass at too low a cut.	(c) Same correction as described in (b).
(d) When cutting grass in a clockwise direction throwing cut grass into uncut grass.	(d) Always mow grass so that the cuttings are discharged into the cut portion of the lawn.
(e) When attempting to cut grass or weeds at too fast a forward speed.	(e) Reduce forward speed to minimum.
(f) When running the engine at low RPM, thereby reducing the cutting speed of the dual rotary blades.	(f) Always use engine at near maximum throttle setting after break-in period. If necessary check your engine RPM to make sure engine is operating properly. Do not operate the mower with the blades dull or out of balance.

ATTACHMENTS INCREASE YOUR TRACTOR'S USEFULNESS

MULCHER SCREEN

1. A mulcher screen can be attached over the discharge opening of the mower deck. With this screen installed you can ride over your lawn and dispose of dried fallen leaves without effort. The mower blade lifts them up, grinds them into pieces small enough to pass through the holes in the screen, and returns them to your lawn as a fine organic mulch.

2. To install the mulcher screen, remove the shrub bar from the discharge opening of the mower. Shape the screen to the inside of the blade housing. Attach to the same holes using the bolts furnished with the mulcher screen.

3. Better mulching action will result if you set your blade at one of the lowest cutting heights. Be sure the leaves are dry before attempting to use the mulching attachment. Wet leaves will not be ground up finely enough to pass through the screen, and will soon clog it.

CAUTION

Be sure the engine is shut off and the blade clutch is disengaged before you attempt to clean a clogged mulcher screen.

GROUND ENGAGING TOOLS

For users who enjoy doing their own gardening, a plow, cultivator, disc harrow, and tiller attachment are available for use with your tractor. It is necessary to have a special hitch, which can be installed easily on the back of the tractor, to use the above mentioned tools. Wheel weights for the rear wheels are also available to furnish extra traction. It is necessary to remove the mower attachment to use the ground engaging tools.

SNOW REMOVAL ATTACHMENTS

For keeping driveways, parking lots and walks clear of snow, a Snow Blower attachment and Snow Blade have been made available. These attachments assemble to the front of the tractor and are raised and lowered with a hand lift lever. The Snow Blade can also be utilized for light grading chores.

OTHER ATTACHMENTS

1. In addition to providing power for your mower attachment, your tractor can be used to pull a lawn roller, aerator, seeder or dump cart, all of which are available from your nearest authorized dealer. They attach to the hitch plate at the rear of the tractor. You may also use the tractor to pull a gang mower of three 21-inch reel mowers. Used in this way, your tractor and mower will cut a 5-foot swath.

2. Tire chains are available for additional traction in snow or mud.

KEEP YOUR TRACTOR WORKING FOR YOU

KEEP IT PROPERLY LUBICATED

1. Lubricate the chassis, from underneath, applying a drop or two of oil to all pivot points in the steering, brake and clutch linkages.

2. When lubricating the underside of the tractor chassis, it may be necessary to tip the tractor over on its side. Lubricate the front wheels, kingpin axles and steering column through the grease fittings provided. (Oilite bearings are used in rear wheels and axle and need no lubrication.) See Lubrication Chart, Figure 8.

3. In order to lubricate the underside of the tractor chassis, it will be necessary to remove the mower attachment. See the section titled "Removal and Replacement of Parts" for assembling the mower attachment to the tractor. You will be able to remove the cutting unit easily and quickly.

4. Use an all purpose Lithium grease and an automotive type grease gun to lubricate the front wheels, front axle kingpins and steering column.

5. Observe the engine manufacturer's oil requirements carefully. Failure to do so will not only void the warranty, but it could also result in engine failure, requiring expensive repair.

6. If it is necessary to add oil to the transmission (check after every 25 hours of operation with the tractor setting level on its front wheels), use a No. 90 multi-purpose gear lubricant. Do not fill above the level of the inspection plug as this will cause blown oil seals, continual leakage, and possible consequent damage to the transmission. The transmission has a lubricant capacity of approximately 1-1/2 pints.

KEEP THE BLADES SHARP AND BALANCED

1. It is important that the blades be kept sharp

	LUBRICATION POINT	LUBRICANT USED	HOW OFTEN
1.	Gearshift Ball	Automotive Engine Oil	25 hours
2.	Blade Clutch Lever Pivot	Automotive Engine Oil	25 hours
3.	Front Wheel Bearings	Automotive Chassis Grease	25 hours
4.	Kingpin Bearings	Automotive Chassis Grease	Twice a season
5.	Front Frame Pivot Point	Automotive Engine Oil	25 hours
6.	Clutch and Brake Pedal Pivots	Automotive Engine Oil	25 hours
7.	Transmission (Drain Plug)	No. 90 Gear Lubricant	Once a season
	Blade Spindle Bearings (Not Illustrated)	Do Not Lubricate; Sealed Lubricants Last Life of Bearings	----------
	Engine Crankcase (Not Illustrated)	See Engine Manufacturer's Instructions	Each 25 hours after initial 5 hour break-in oil change
	Steering Column Bearings (Not Illustrated)	Automotive Chassis Grease	25 hours

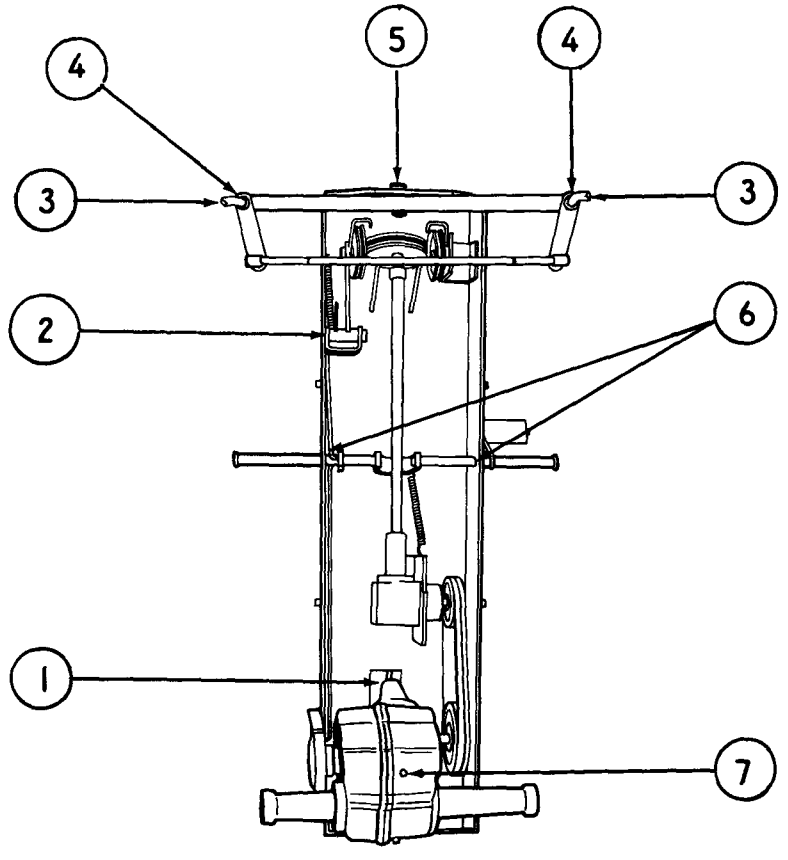

Figure 8. LUBRICATION POINTS

and in balance. Dull blades waste power, and do a poor grass cutting job. Blades which are out of balance cause excessive vibration on the bearings. When sharpening blades, always take equal amounts of metal off both cutting edges. Replace blades which show any signs of cracks or crystallization to prevent their disintegration at high rotating speeds.

2. Inexpensive blade balancers are available to assure that the blades are in balance after sharpening. In case sharpening results in an out of balance blade, grind some more metal off heavy end. Remove and replace the blades as described under "Removal and Replacement of Parts."

HOW TO OBTAIN SERVICE

1. The merchandise you have purchased has been carefully engineered and manufactured under rigid quality standards and will give you satisfactory and dependable operation. However, like all mechanical merchandise, it may occasionally require adjustment or maintenance.

2. If your tractor should require service other than the lubrication described in these instructions contact or take it to your nearest authorized Toro dealer.

3. Provide the following:

   a. Model, serial number and all of the other data shown on the model plates on the tractor or mower attachment.

   b. State briefly the trouble you are having.

ENGINE

Read carefully the maintenance instructions for your engine and the 12-volt electric starter.

TIRE PRESSURE

The tractor uses pneumatic tires on all four wheels. The 4.00/4.80 x 8 front tire should be inflated from 12 to 16 lbs pressure. The 6.50 x 8 front tire should be inflated from 7 to 10 lbs pressure. The 6.0 x 12 rear tire should be inflated from 6 to 10 lbs pressure. The 8.0 x 12 rear tire should be inflated from 7 to 10 lbs pressure. It may also be desirable to have the tires filled with a fluid for additional weight when using ground engaging tools (see your local implement dealer for proper non-freezing fluid).

ADJUSTMENTS

1. Spring loaded idlers on the tractor drive belts and on the blade drive belts of the mower attachment maintain proper tension for these belts so that adjustment is not normally required.

2. Adjust the brake band by tightening or loosening the lock nut on the rear of the brake rod.

3. Carburetor adjustments are covered in the engine instruction manual.

ELECTRICAL SYSTEM

1. Battery water level must be properly maintained and the top of the battery must be kept clean. (If battery is in a very hot place between periods of engine operation it will run down more rapidly than if stored in a cool location.)

2. Under normal conditions, one hour of engine operation per week will keep battery charged. Under extremely low temperatures two hours of operation per week may be necessary.

BATTERY

1. Check electrolyte level every 25 operating hours or every 30 days.

2. Maintain level with distilled or de-mineralized water. Avoid over filling.

3. Keep top of battery clean by periodically washing with a brush dipped in ammonia or bicarbonate of soda. Follow by flushing with clean water.

4. Battery cables must be tight on terminals to provide a good contact.

5. If corrosion occurs at terminals, disconnect cables and scrape clamps and terminals separately. Coat terminals with petroleum jelly and re-install.

PREPARATION FOR STORAGE

1. If it is necessary to store the tractor and the attachments for more than 60 days, remove all grass clippings, mud and dust. Wipe all lubrication points clean and lubricate.

2. Drain the gasoline from the fuel tank and the carburetor to prevent formation of gummy deposits. Run the engine until any remaining fuel is consumed. Drain the oil from the engine crankcase while warm and refill with clean oil. Drain and refill the transmission using No. 90 gear lubricant (Capacity approximately 1-1/2 pints).

3. If you are going to use the tractor during the winter, it will be necessary each time to run the tractor and transmission for a few minutes, without load, until the oil in the engine and the lubricant in the transmission have thinned out sufficiently to provide proper lubrication. Use winter weight (SAE 10W) oil in the engine.

4. When preparing the engine for prolonged storage, put one tablespoon of engine oil (SAE 10W) into the spark plug hole, after the spark plug has been removed. Turn the engine slowly by hand to allow the piston to distribute the oil evenly over the cylinder

walls. Replace the spark plug with an old plug which will not be used again, or plug the hole with a cork. (This prevents fouling the good plug with the oil used to protect the cylinder and piston.)

5. Before starting the engine, remove the old spark plug or cork; reinsert the good spark plug after being sure it is clean and properly gapped according to the engine manufacturer's instructions. Check the oil in the engine and transmission. Fill the fuel tank. The tractor is now ready again for operation.

6. After prolonged storage of the tractor, it may be necessary to have the battery charged at the beginning of the season. The simplest instructions for the storage of a battery between seasons are that it be charged when stored, and then stored in a cool place, but not where it will be subjected to sub-zero temperatures. Storage at 20° to 50° is ideal.

REMOVAL AND REPLACEMENT OF PARTS

CAUTION

Before performing any service operations on the mower be sure to disconnect the spark plug wire to prevent accidental starting of the engine. It is wise to remove the battery completely.

BLADES

1. The mowing attachment uses two blades. It will be necessary to block the rear of the tractor up and disengage the blade clutch to apply the brake to the blade drive spindle. Insert a drift pin or other blocking device into the hole in the mower deck belt housing, adjacent to each of the blades, to prevent the blades from turning. The hole should be lined up with the hole in the blade spindle pulley so that the spindle will not turn while loosening the blade nuts. (See figure 9.)

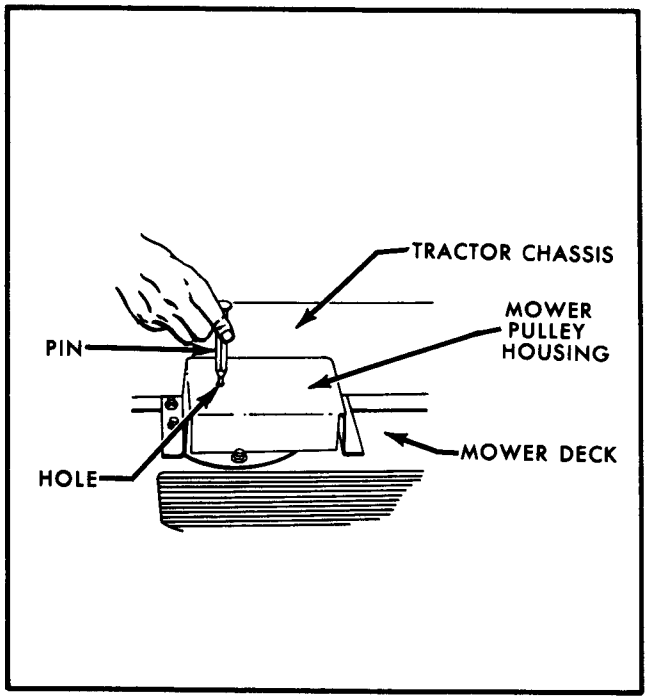

Figure 9. Locking Blade Pulley to Loosen Blade Nut

2. Remove the blades by taking off the right hand threaded spindle nuts. Note the positions of the large and small flat washers as these must be replaced in the same positions when the blade is reinstalled. (See figure 10.)

3. Be sure the blades are installed right side up. Use the blocking pins to prevent the blades from turning when retightening the spindle nuts.

MOWER ATTACHMENT

The mower attachment can be removed by reversing the assembly procedure. (See section titled "Get Your Tractor Ready To Work.")

BELTS

It is necessary to remove the mower attachment

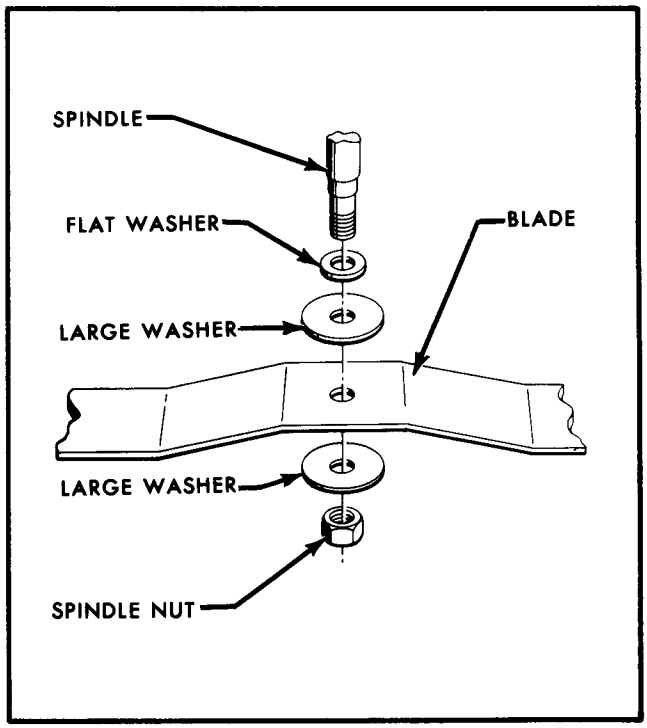

Figure 10. Assembly of Blades

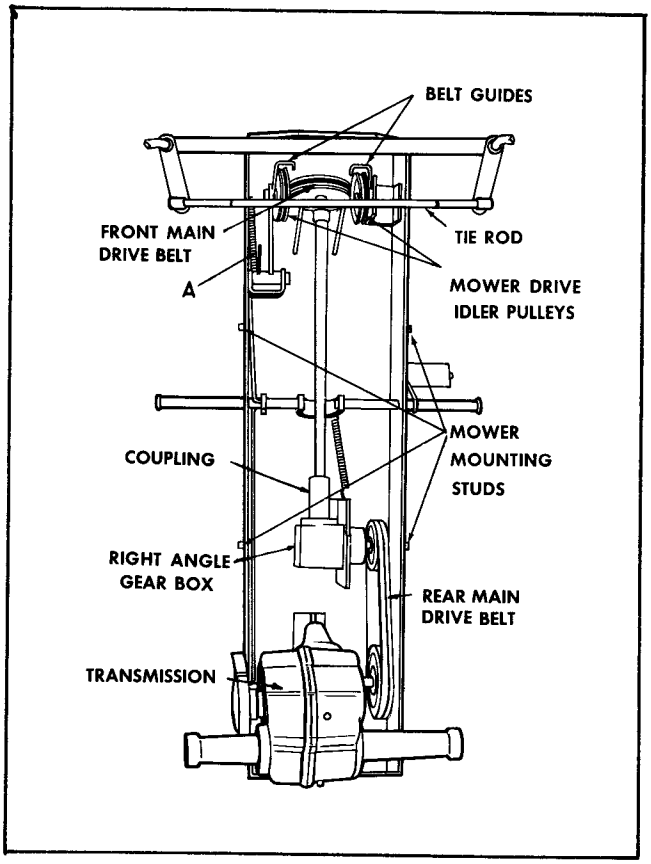

Figure 12 Drive Components

before replacing the belts under the tractor chassis. Remove mower attachment, battery, and engine oil bath air cleaner. Tip the tractor on its left side (this would be as if you were sitting in the seat) to expose the underside of the chassis.

Note: Both the front main drive belts and the rear main drive belts must be replaced in matched pairs.

To remove the front main drive belts depress the clutch and set the parking brake to take the tension off of the belts. Take the belts off of the bottom pulley then off of the top pulleys. It will be necessary to squeeze the belts out of the belt guide.

Adjustment or removal of the rear drive belt involves loosening (5) five screws. Loosen the four nuts that fasten the right angle drive mounting bracket to the chassis. They are located on the top of the chassis in front of the gear shift lever. Also loosen the bolt in the coupling that joins the shaft from the right angle drive to the tractor drive shaft. There is allowance for adjustment built into the coupling. With these bolts loosened the belts can be removed, replaced, and adjusted easily. When the adjustment is made, tighten the nuts securely.

The rear drive belts rarely require attention and will probably last the life of the tractor under normal useage.

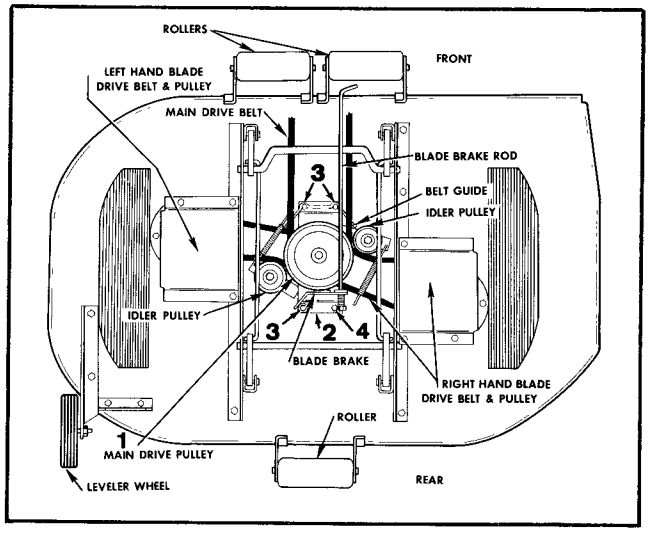

Figure 13. Mower Belt Instalation

BLADE BELTS

To make the blade belts accessible the main drive pulley (No. 1 Fig. 13) and the blade pulley bracket (No. 2 Fig. 13) must be removed. Remove the screw and the two (2) washers from the top of the shaft, loosen the set screw in the pulley and slide the pulley up off of the shaft. Remove the three (3) mounting bolts (No. 3 Fig. 13) and the blade brake mounting bolt (No. 4 Fig. 13) that hold the bracket to the mower deck and slide it off of the shaft. You need not remove the bearing housing & bearing from the bracket.

Remove the right hand and left hand pulley covers for access to the blade drive belts. (See figure 13.) Unhook the springs from the idlers. Remove belts from the outside pulleys first and then remove them from the center pulley. Replace in the reverse order. Be sure to hook the springs into the idler arms. Replace all of the components after the new belts have been installed.

TRANSMISSION

If the transmission should require repair, get in touch immediately with your closest "TORO" service station.

ENGINE

Contact your nearest "TORO" dealer for engine repair service.

CONTACT YOUR LOCAL
TORO DEALER
FOR REPAIR PARTS,
MOWER SERVICE AND
LAWN CARE INFORMATION



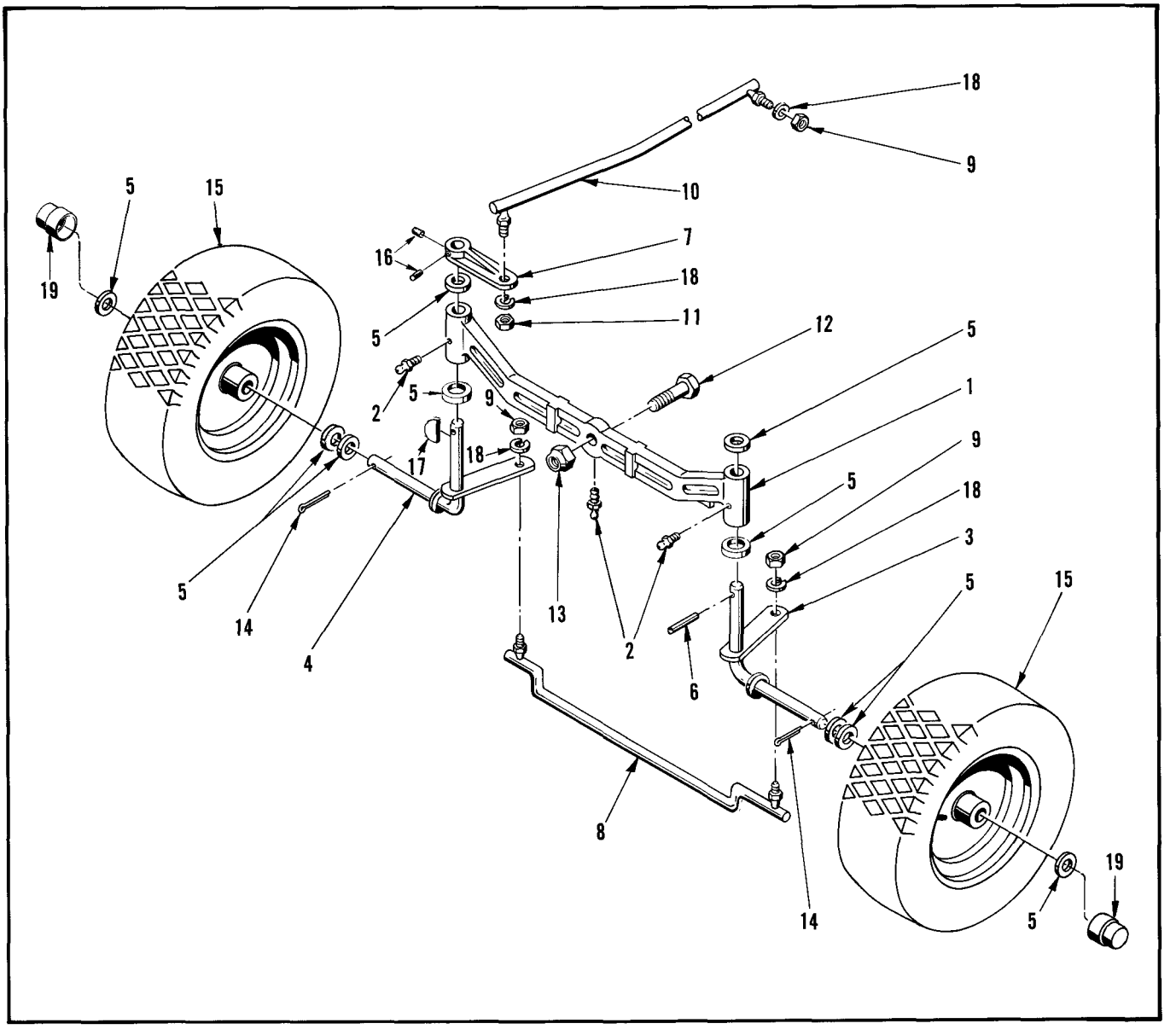

FRONT END ASSEMBLY

Ref. No.	Part No.	Description	Qty.
1	7-0414	Front Axle Housing	1
2	302-43(s)	Grease Fitting	3
3	7-0416	Axle Assembly L. H.	1
4	7-0415	Axle Assembly R. H.	1
5	3256-28	Flat Washer	10
6	32121-15	Roll Pin	1
7	7-0418	Steering Lever	1
8	7-0417	Tie Rod	1
9	3219-3	Nut	3
10	7-0411	Steering Rod	1
11	3220-3	Nut	1
12	7-0371	Pivot Bolt	1
13	32152-6(s)	Lock Nut	1

Ref. No.	Part No.	Description	Qty.
14	3272-23	Cotter Pin	2
15	241-86(s)	Wheel Assembly (Consists of)	2
	231-46(s)	a. Tire	1
	232-3	b. Tube	1
	217-63(s)	c. Rim	1
	251-209(s)	d. Bearing (Inner)	1
	251-210(s)	e. Bearing (Outer)	1
	302-5	f. Grease Fitting	1
16	3242-2	Set Screw	2
17	3257-23	Key	1
18	3253-21	Lockwasher	4
19	217-64(s)	Hub Cap	2

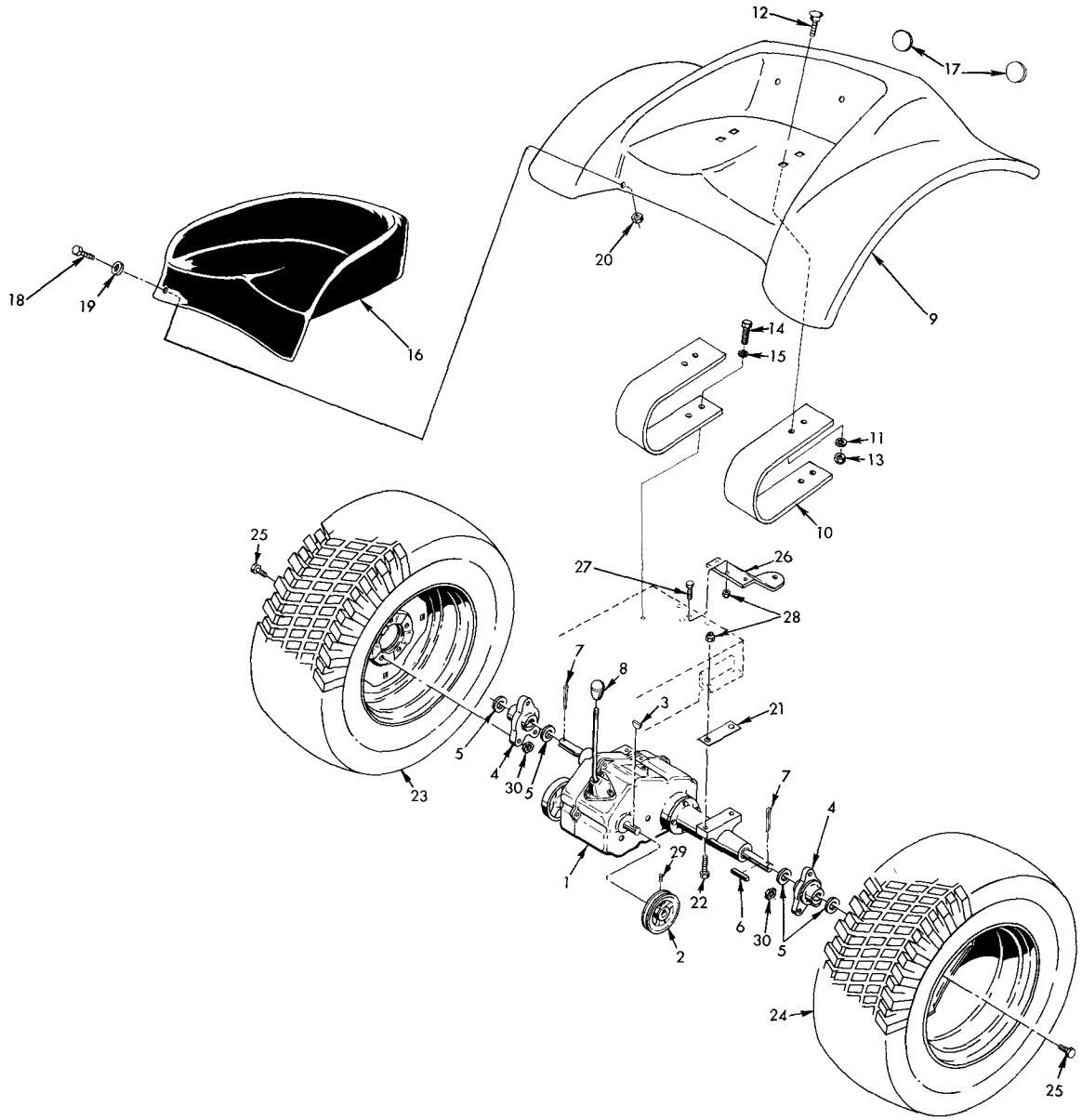

REAR END ASSEMBLY

Ref. No.	Part No.	Description	Qty.
1	7-0477	Transmission 10 & 12HP	1
1	7-0661	Transmission 8HP	1
2	7-0478	Transmission pulley	1
3	3257-23	Key	1
4	7-0480	Hub Wheel	2
5	7-0481	Washer Flat 1" special	4
6	7-0238	Key Square	2
7	3272-30	Pin Cotter	2
8	233-18(s)	Knob Shift Lever	1
9	7-0484	Seat Fender	1
10	7-0158	Seat Spring	2
11	3253-7	Lock Washer	2
12	3233-9	Carriage Bolt	4
13	3218-5	Nut Hex	7
14	323-3	Bolt	4
15	3253-21	Lockwasher	5
16	7-0531	Seat Cushion	1
17	7-0485	Reflectors	2
18	3290-288(s)	Bolt	4
19	3256-16	Washer Plated	4

Ref. No.	Part No.	Description	Qty.
20	3219-14	Nut Hex	4
21	7-0461	Axle Pad	1
22	322-8	Mach. Screw	4
23	7-0554	Wheel Assy Rear 10 & 12 (Consists of)	2
	217-62(s)	a. Rim	1
	231-41	b. Tire 8 x 12	1
	232-24	c. Valve Core	1
24	7-0660	Wheel Assy Rear 8 only (Consists of)	2
	217-65(s)	a. Rim 12 x 5	1
	231-37	b. Tire 6 x 12	1
	232-20	c. Tube 6 x 12	1
25	3212-5	Bolt,Wheel	6
26	7-0463	Hitch Chassis	1
27	323-4	Bolt	4
28	32152-2(s)	Nut	7
29	3245-9	Set Screw	1
30	3219-4	Nut	6

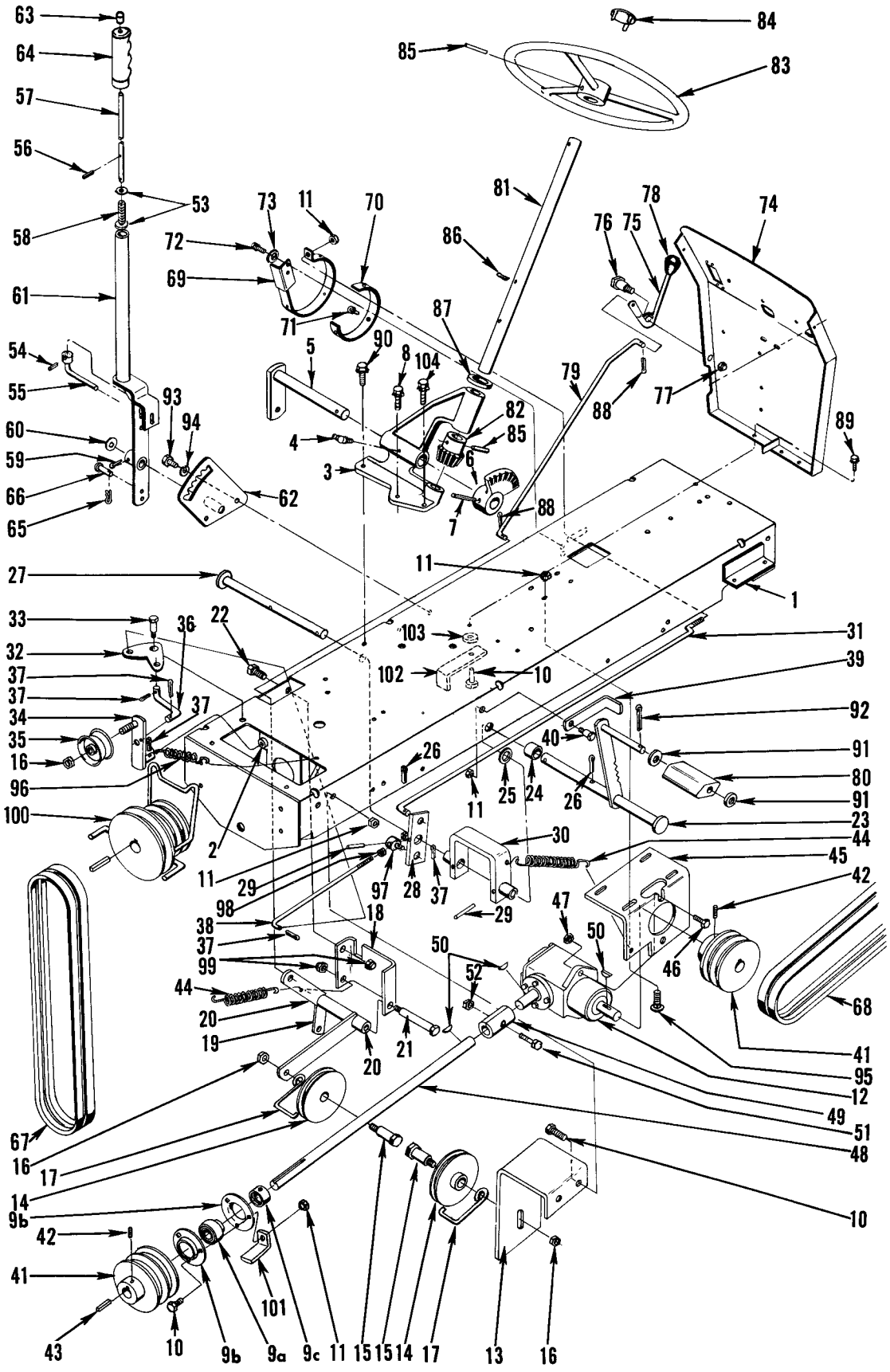

CHASSIS EXPLODED VIEW

CHASSIS ASSEMBLY

Ref. No.	Part No.	Description	Qty.
1	7-0367	Chassis (8 & 10)	1
1	7-0563	Chassis (12)	1
2	256-169(s)	Bushing	1
3	7-0407	Steering Gear Support	1
4	302-44(s)	Grease Fitting	3
5	7-0408	Steering Weld Assy	1
6	7-0410	Steering Gear	1
7	32121-72(s)	Drive Lok	1
8	322-3	Bolt	1
9	251-208(s)	Brg. RAT, Fafnir (Consists of)	1
		a. Bearing	1
		b. Flange	2
		c. Collar	1
10	322-3	Bolt	8
11	32152-1(s)	Conelok	9
12	7-0424	Right Angle Gear Box	1
13	7-0430	Idler Brkt. L. H	1
14	7-0431	Pulley	2
15	32141-84(s)	Leveler Head Screw	2
16	32152-2(s)	Locknut	3
17	7-0432	Belt Retainer	2
18	7-0375	Mounting Brkt	1
19	7-0434	Idler Arm Assy	1
20	256-171(s)	Bushing	2
21	7-0377	Shoulder Bolt	1
22	323-4	Bolt	1
23	7-0378	Brake Crank Arm Assy	1
24	7-0380	Brake Spacer	1
25	7-0126	Washer	1
26	3272-7	Cotter Pin	3
27	7-0381	Brake Shaft Short	1
28	7-0382	Bracket Idler	1
29	32121-71(s)	Roll Pin	3
30	7-0383	Bracket Connector	1
31	7-0384	Brake Rod	1
32	7-0385	Bell Crank Assy	1
33	7-0135	Shoulder Bolt	1
34	7-0447	Idler Arm Weld	1
35	7-0448	Pulley	1
36	7-0387	Idler Rod Short	1
37	3272-5	Cotter Key	5
38	7-0390	Idler Rod	1
39	7-0391	Brake Strap	1
40	7-0163	Shoulder Bolt	1
41	7-0392	Pulley Drive	2
42	3245-7	Set Screw	2
43	5-1865	Square Key	1
44	7-0393	Spring	2
45	7-0423	Brkt., RA Gear Box	1
46	323-7	Bolt	2
47	32152-2(s)	Conelok	4
48	7-0425	Drive Shaft	1
49	7-0426	Coupling	1
50	3257-23	Key	3
51	322-11	Bolt	1
52	32152-1(s)	Conelok	1
53	7-0052	Flat Washer	2
54	32121-50	Roll Pin	1
55	7-0516	Lift Lock Assy	1
56	32121-73(s)	Roll Pin	1
57	7-0515	Lift Rod	1
58	7-0514	Compression Spring	1
59	3272-11	Cotter Pin	1
60	7-0131	Flat Washer	1
61	7-0513	Handle, Lower	1
62	7-0512	Quadrant Assy	1
63	7-0508	Cap Lift Adj. Rod	1
64	7-0510	Handle Grip	1
65	3290-255	Hair Pin	1
66	7-0511	Clevis Pin	1
67	7-0550	Belt 3V270 matched set 2 belts	1
68	7-0551	Belt 3V375 matched set 2 belts	1
69	7-0482	Brake Band	1
70	7-0207	Brake Lining	1
71	3290-287(s)	Rivet	3
72	321-2	Screw	2
73	3253-3	Lockwasher	2
74	7-0465	Rear Hood Support Assy	1
75	7-0495	Clutch Lever	1
76	7-0135	Shoulder Bolt	1
77	32152-1(s)	Conelok	1
78	233-18(s)	Knob	1
79	7-0466	Clutch Rod	1
80	7-0128	Foot Pedal	1
81	7-0467	Steering Post	1
82	7-0468	Steering Pinion	1
83	7-0470	Steering Wheel	1
84	7-0471	Cap Steering Wheel	1
85	32121-9	Roll Pin	2
86	3272-30	Cotter Pin	1
87	3256-28	Washer	1
88	3272-7	Cotter Pin	2
89	32140-51(s)	Bolt	2
90	32140-54(s)	Bolt	1
91	7-0130	Washer	2
92	3272-11	Cotter Pin	1
93	322-3	Bolt	2
94	3253-4	Lockwasher	2
95	3230-1	Carriage Bolt	4
96	7-0141	Spring	1
97	7-0388	Pivot Pin	1
98	32152-4(s)	Conelok	2
99	32152-2(s)	Conelok	4
100		SEE HOOD GROUP	
101	7-0372	Belt Guide	1
102	7-0395	Stop	1
103	7-0024	Washer	1
104	32140-45	Sems Screw	1

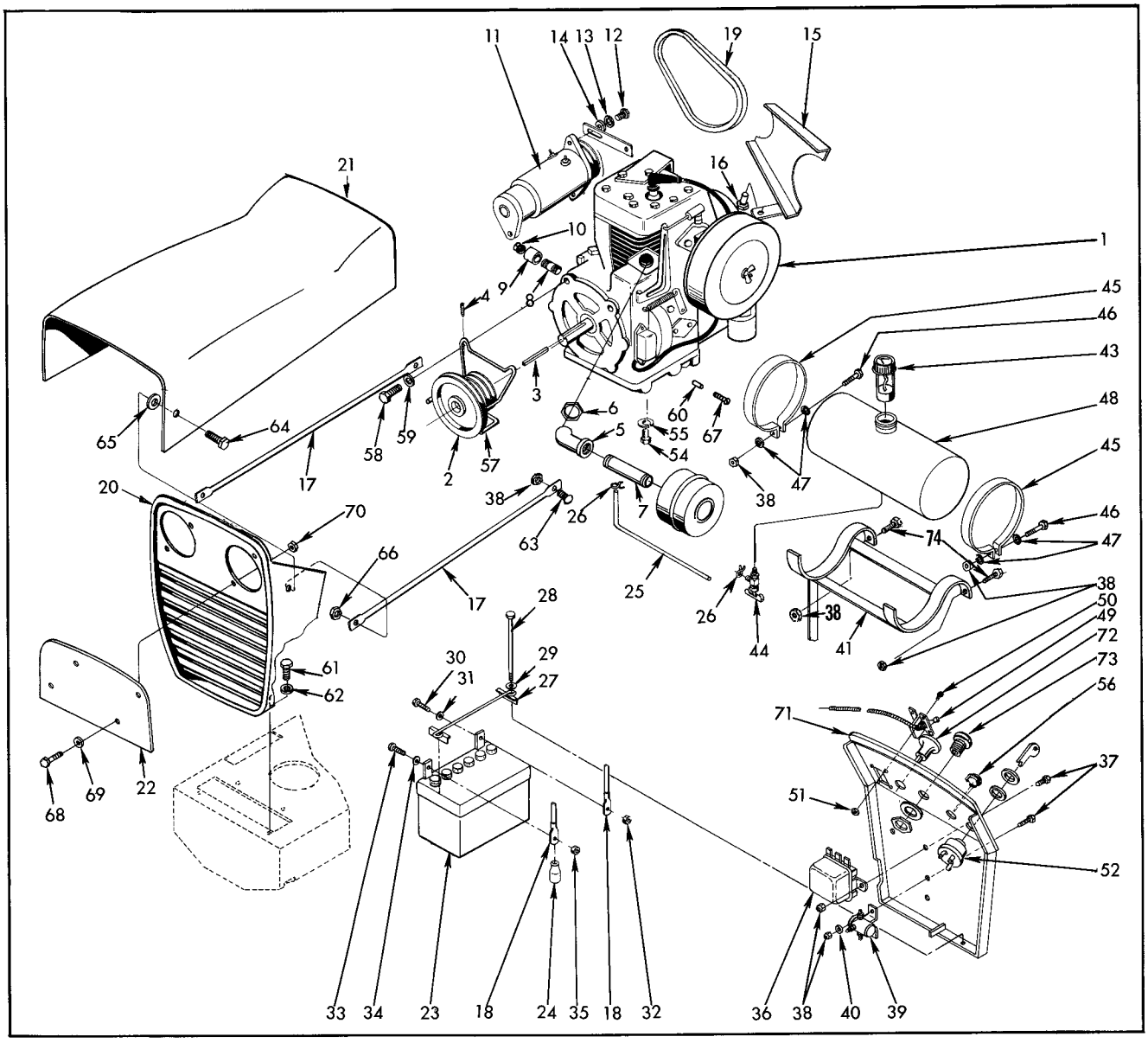

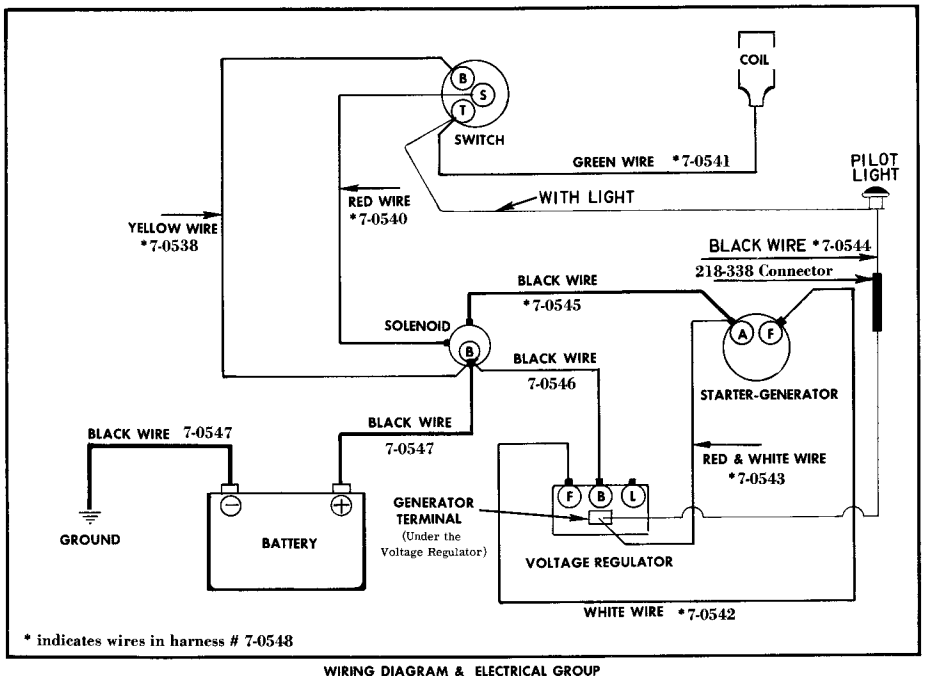

WIRING DIAGRAM & ELECTRICAL GROUP

HOOD GROUP ASSEMBLY

Ref. No.	Part No.	Description	Qty.
1	221-278(s)	12HP Kohler K301A	1
1	221-277(s)	10HP Kohler K241 AS	1
1	221-281(s)	8HP Kohler K1815	1
2	7-0453	Pulley-engine	1
3	7-0238	Square Key	1
4	3245-9	Set Screw	1
5	2811-11(s)	Street Elbow 1", 45 Degrees	1
6	3290-163	Conduit Lock Nut	1
7	289-24	Nipple	1
8	389-22	Nipple	1
9	2810-3	Coupling	1
10	285-3	Pipe Plug	1
11	218-336(s)	Motor Generator	1
12	322-3	Bolt	1
13	3253-4	Lockwasher	1
14	3256-3	Washer	1
15	7-0455	Belt Guard Assy	1
16	322-5	Bolt	1
17	7-0475	Rod, Hood Support	2
18	7-0547	Battery Cable	2
19	7-0530	Belt-Starter Gen	1
20	7-0527	Grill	1
21	7-0474	Hood	1
22	7-1130	Grill Plate	1
23	239-14(s)	Battery 12 V	1
24	218-331(s)	Battery Boot Terminal	2
25	7-0476	Gas Hose	1
26	2412-20	Hose Clamp	2
27	7-0534	Battery Clamp	1
28	7-0307	Battery Bolt	2
29	7-0553	Washer	2
30	322-3	Bolt	1
31	7-0024	Washer	1
32	3217-6	Nut	1
33	321-4	Bolt	1
34	3256-16	Washer	1
35	3217-5	Nut	1
36	218-334(s)	Voltage Regulator	1

Ref. No.	Part No.	Description	Qty.
37	321-2	Bolt	4
38	32152-4(s)	Conelok	10
39	218-335(s)	Solenoid	1
40	3256-16	Washer	2
41	7-0488	Gas Tank Brkt. Assy	1
42	321-3	Bolt	1
43	7-0492	Gas Gauge	1
44	304-88(s)	Valve Shut Off	1
45	7-0491	Strap Fuel Tank	2
46	321-8	Bolt	2
47	3256-16	Washer	4
48	7-0490	Gas Tank	1
49	7-0502	Throttle Control Assy	1
50	32122-43(s)	Screw, cross recess	2
51	32149-6	Nut Keps	2
52 *	218-337(s)	Starter Switch	1
54	323-4	Bolt	4
55	3253-21(s)	Lockwasher	4
56	2410-22(s)	Plug Button	1
57	7-0656	Belt Guide(8 HP Only)	1
57	7-0454	Belt Guide(10, 12 HP Only)	1
58	324-2	Bolt	2
59	7-0032	Washer	2
60	7-0535	Spacer	1
61	32140-45	Bolt	2
62	7-0532	Washer	2
63	3229-11	Carriage Bolt	2
64	3274-32(s)	Bolt	2
65	7-0533	Washer	2
66	32152-1(s)	Nut	2
67	3251-12	Screw	1
68	3290-289(s)	Screw	4
69	3253-17	Washer	4
70	3219-14	Nut	4
71	7-0501	Dash Panel	1
72	7-0503	Choke	1
73	7-0552	Pilot Light	1
74	321-4	Bolt	1

* Includes key, washer and nut

INSIST ON GENUINE TORO PARTS

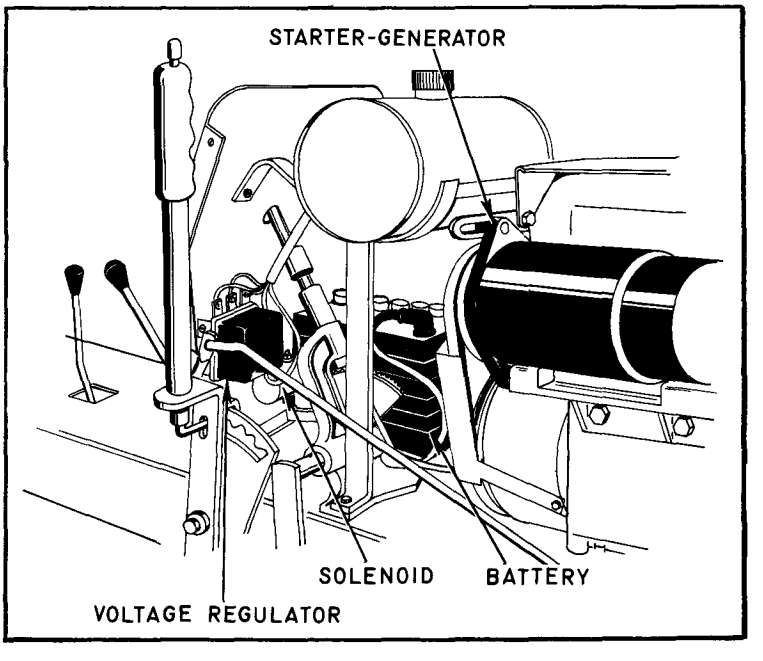

10hp & 12hp only

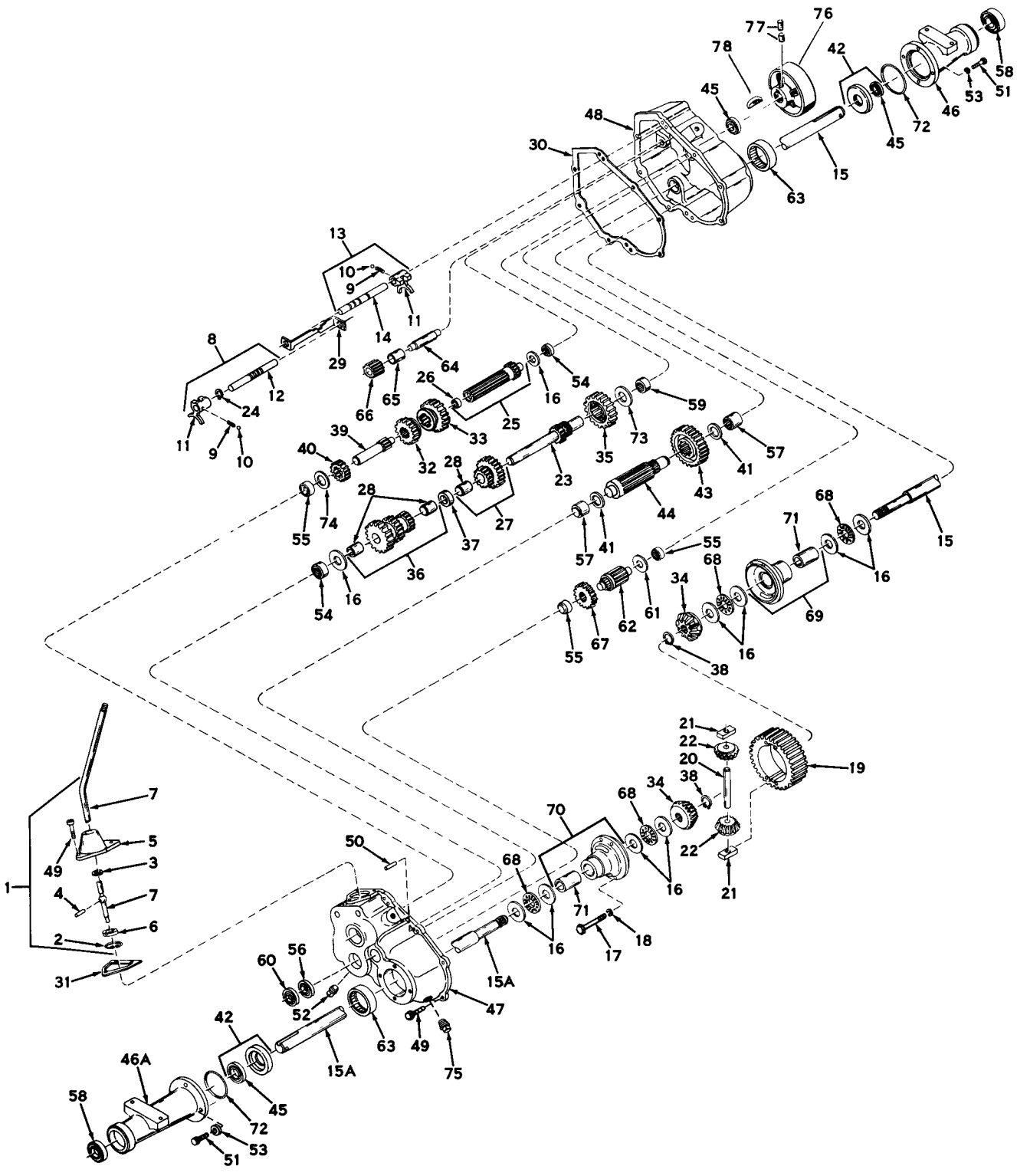

TRANSMISSION PARTS LIST
10 & 12 H. P. Only

Ref. No.	Part No.	Description	Qty.
1	2119-292(s)	Shift Lever & Hsg. Assy (Incl Nos. 2 thru 7)	1
2	2119-229	Snap Ring	1
3	237-18	Quad. Ring	1
4	32121-6	Roll Pin	1
5	2119-293	Shift Lever Housing	1
6	2119-228	Shift Lever Keeper	1
7	2119-294(s)	Shift Lever	1
8	2119-295(s)	Shift Rod Assy (Incl Nos. 9 thru 12 and 24)	1
9	2119-182	Spring	2
10	255-1	Steel Ball	2
11	2119-183	Shifter Fork	2
12	2119-230	Shifter Rod	1
13	2119-296(s)	Shift Rod Assy (Incl Nos. 9, 10, 11, and 14)	1
14	2119-231	Shifter Rod	1
15	2119-297(s)	Axle, RH	1
15A	2119-298(s)	Axle, LH	1
16	2119-251	Thrust Washer	10
17	321-15	Bolt	4
18	3253-3	Lockwasher	4
19	2119-248	Ring Gear	1
20	2119-190	Drive Pin	1
21	2119-247	Drive Block	2
22	2119-192	Bevel Pinion	2
23	2119-270	Brake Shaft & Gear	1
24	2119-233	Snap Ring	1
25	2119-271	Pinion Shaft & Brg. Assy (Incl No. 26)	1
26	2119-195	Bearing	1
27	2119-275	Gear Cluster Assy (Incl No. 28)	1
28	2119-272	Bushing	3
29	2119-232	Shifter Stop	1
30	2119-238	Case & Cover Gasket	1
31	2119-274	Shift Lever Hsg. Gasket	1
32	2119-201	Shifting Gear 3 and 4	1
33	2119-202	Shifting Gear 1, 2, and Rev.	1
34	2119-250	Bevel Gear	2
35	2119-240	Idler Gear	1
36	2119-299(s)	Gear Cluster Assy (Incl No. 28)	1
37	2119-276	Spacer	1
38	2119-255	Snap Ring	2
39	2119-300(s)	Input Shaft	1
40	2119-209	Input Shaft Spur Gear	1
41	2119-278	Thrust Washer	2
42	2119-236	Oil Seal & Retainer Assy (Incl No. 45)	2
43	2119-243	Output Gear	1
44	2119-301(s)	Output Pinion	1
45	2119-224	Oil Seal	3
46	2119-302(s)	RH Axle Housing	1
46A	2119-303(s)	LH Axle Housing	1
47	2119-304(s)	Transaxle Case	1
48	2119-305(s)	Transaxle Cover	1
49	3274-8	Socket Head Cap Screw	11
50	2119-239	Dowel Pin	2
51	322-3	Bolt	8
52	2119-280	Magnetic Drain Plug	1
53	3253-4	Lockwasher	8
54	2119-281	Needle Bearing	2
55	2119-220	Needle Bearing	3
56	2119-225	Ball Bearing	1
57	2119-282	Needle Bearing	2
58	2119-234	Ball Bearing	2
59	2119-283	Needle Bearing	1
60	2119-245	Oil Seal	1
61	2119-210	Washer	1
62	2119-284	Shaft and Pinion	1
63	2119-285	Needle Bearing	2
64	2119-286	Reverse Idler Shaft	1
65	2119-287	Reverse Idler Spacer	1
66	2119-364(s)	Reverse Idler	1
67	2119-288	Spur Gear 22 Teeth	1
68	2119-252	Thrust Bearing	4
69	2119-256	Differential Carrier Assy (Incl No. 71)	1
70	2119-253	Differential Carrier Assy (Incl No. 71)	1
71	2119-254	Bushing	2
72	2119-244	O Ring	2
73	2119-289	Thrust Washer	1
74	2119-290	Thrust Washer	1
75	281-2	Pipe Plug	1
76	2119-307(s)	Brake Drum	1
77	3245-7	Set Screw	2
78	2119-309(s)	Key	1

RIGHT ANGLE DRIVE PARTS LIST
8, 10, & 12 H.P.

Ref. No.	Part No.	Description	Qty.
1	2119-310(s)	Head Assy, RH (Incl Nos. 2 thru 15)	1
2	2119-311(s)	Housing, Right angle drive	1
3	2119-312(s)	Gear, Miter	2
4	2119-313(s)	Shaft, Input Pinion	1
5	2119-314(s)	Shaft, Output	1
6	2119-315(s)	Cover, Right Hand	1
7	2119-316(s)	Gasket, Cover	1
8	2119-317(s)	Bearing, Ball	3
9	2119-225(s)	Bearing, Ball	1
10	2119-319(s)	Ring, Snap	1
11	2119-320(s)	Ring, Snap	2
12	2119-321(s)	Seal, Oil	1
13	2119-322(s)	Gasket, Cap	1
14	32104-26	Screw	4
15	2119-323(s)	Cap & Seal Assy, Retainer (Incl. Nos. 16 & 17)	1
16	2119-324(s)	Seal, Oil	1
17	321-5	Screw, Hex Hd	4

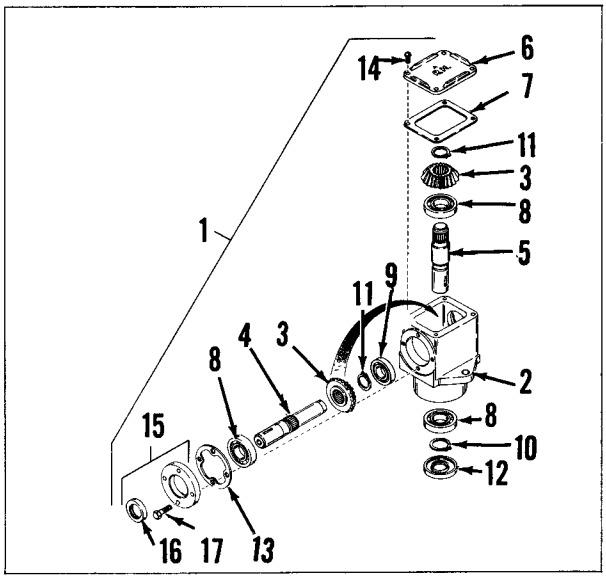

8hp only

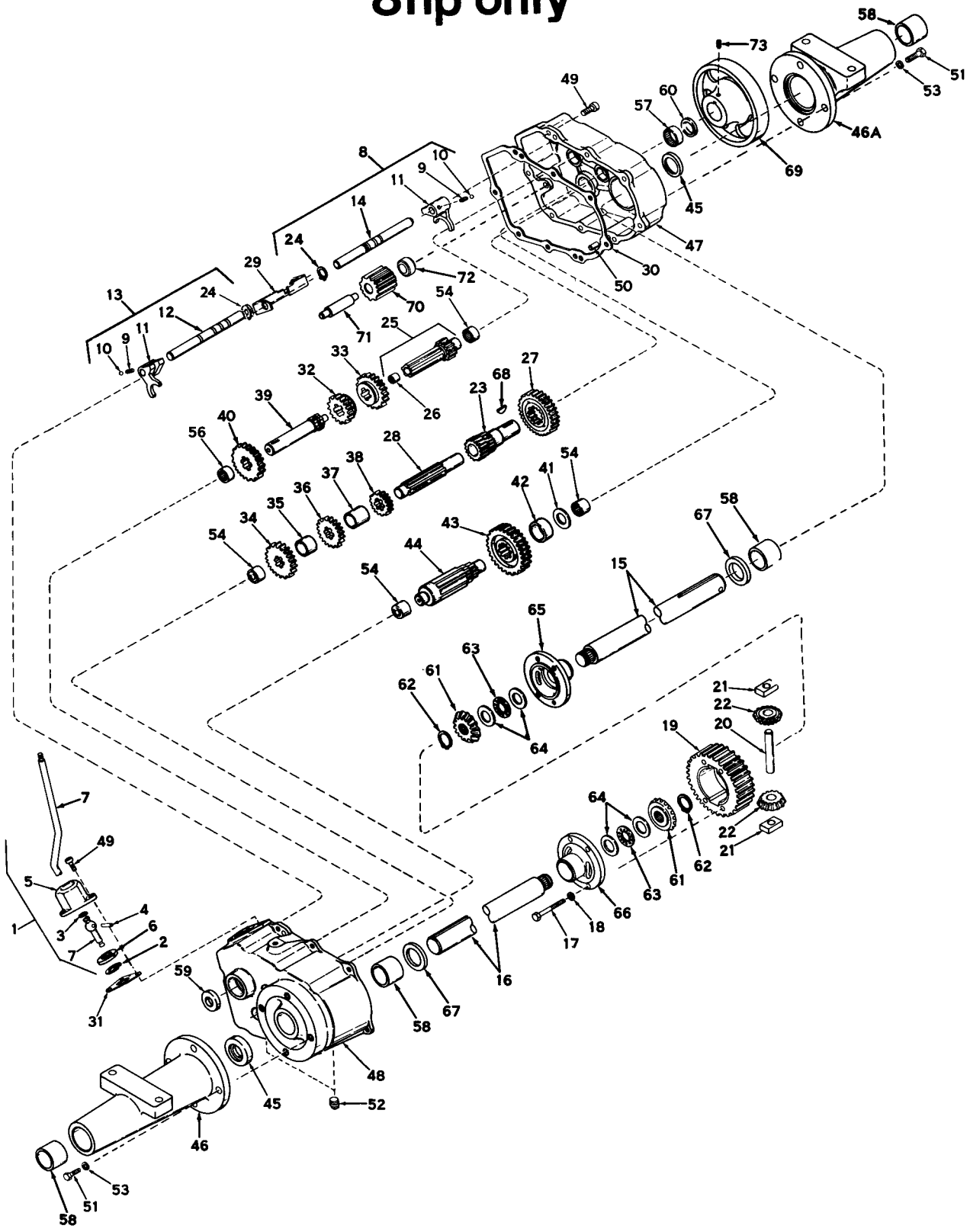

58
73
51
53
49
60
57
46A
69
8
10
9
11
14
45
47
24
29
72
30
50
13
24
12
70
54
71
25
10
9
11
33
27
32
68
23
39
26
40
56
28
38
54
37
41
42
36
35
34
43
67
58
54
44
15
54
65
63
61
62
21
22
20
19
64
7
64
22
21
49
62
61
5
63
66
4
18
1
3
6
17
2
7
16
59
67
31
58
48
45
52
46
53
51
58

TRANSMISSION PARTS LIST

8 H.P. Only

Ref. No.	Part No.	Description	Qty.
1	2119-325(s)	Housing/Lever Assy Shift (Incl. Nos. 2 thru 7)	1
2	2119-229	Snap Ring	1
3	237-18	Quad. Ring	1
4	32121-6	Roll Pin	1
5	2119-326(s)	Shift Lever Housing	1
6	2119-228	Shift Lever Keeper	1
7	2119-327(s)	Shift Lever	1
8	2119-328(s)	Shift Rod Assy (Incl. Nos. 9, 10, 11, 14, and 24)	1
9	2119-182	Spring	2
10	255-1	Steel Ball	2
11	2119-183	Shifter Fork	2
12	2119-231	Shifter Rod	1
13	2119-329(s)	Shifter Rod Assy (Incl. Nos. 9 thru 12 and 24)	1
14	2119-230	Shifter Rod	1
15	2119-330(s)	RH Axle	1
16	2119-331(s)	LH Axle	1
17	321-15	Bolt	4
18	3253-3	Lockwasher	4
19	2119-248	Ring Gear	1
20	2119-190	Drive Pin	1
21	2119-247	Drive Block	2
22	2119-332(s)	Bevel Pinion	2
23	2119-333(s)	Idler Pinion/Bushing Assy.	1
24	2119-233	Snap Ring	1
25	2119-334(s)	Shifter Shaft/Brg. Assy (Incl. No. 26)	1
26	2119-195	Bearing	1
27	2119-240	Idler Gear	1
28	2119-335(s)	Idler Shaft	1
29	2119-232	Shifter Stop	1
30	2119-337(s)	Case/Cover Gasket	1
31	2119-338(s)	Shift Lever Hsg. Gasket	1
32	2119-201	Shifting Gear 2nd/High	1
33	2119-202	Shifting Gear 1st/Rev	1
34	2119-339(s)	Spur Gear 26 Teeth	1
35	2119-340(s)	Spacer	1

Ref. No.	Part No.	Description	Qty.
36	2119-341(s)	Spur Gear 22 Teeth	1
37	2119-342(s)	Spacer	1
38	2119-343(s)	Spur Gear 16 Teeth	1
39	2119-300(s)	Input Shaft Gear	1
40	2119-209	Input Shaft Spur Gear	1
41	2119-210	Washer	1
42	2119-345(s)	Spacer	1
43	2119-243	Output Gear	1
44	2119-346(s)	Output Pinion	1
45	2119-347(s)	Oil Seal	1
46	2119-348(s)	LH Axle Hsg. Incl No. 58	1
46A	2119-349(s)	RH Axle Hsg. Incl No. 58	1
47	2119-350(s)	Transaxle Cover	1
48	2119-351(s)	Transaxle Case	1
49	3274-8	Soc. HD Screw	11
50	2119-239	Dowel Pin	2
51	322-3	Bolt	8
52	281-2	Pipe Plug	2
53	3253-4	Lockwasher	8
54	2119-352(s)	Bearing	4
56	2119-353(s)	Bearing	1
57	2119-354(s)	Bearing	1
58	2119-355(s)	Bearing	4
59	2119-356(s)	Oil Seal	1
60	2119-224	Oil Seal	1
61	2119-357(s)	Bevel Gear	2
62	2119-255	Snap Ring	2
63	2119-358(s)	Thrust Bearing	2
64	2119-359(s)	Thrust Washer	4
65	2119-360(s)	Differential Carrier	1
66	2119-361(s)	Differential Carrier	1
67	2119-362(s)	Thrust Washer	2
68	2119-309(s)	Woodruff Key	1
69	2119-363(s)	Brake Drum	1
70	2119-364(s)	Reverse Idler	1
71	2119-365(s)	Reverse Idler Shaft	1
72	2119-366(s)	Reverse Idler Spacer	1
73	2119-192(s)	Set Screw	1

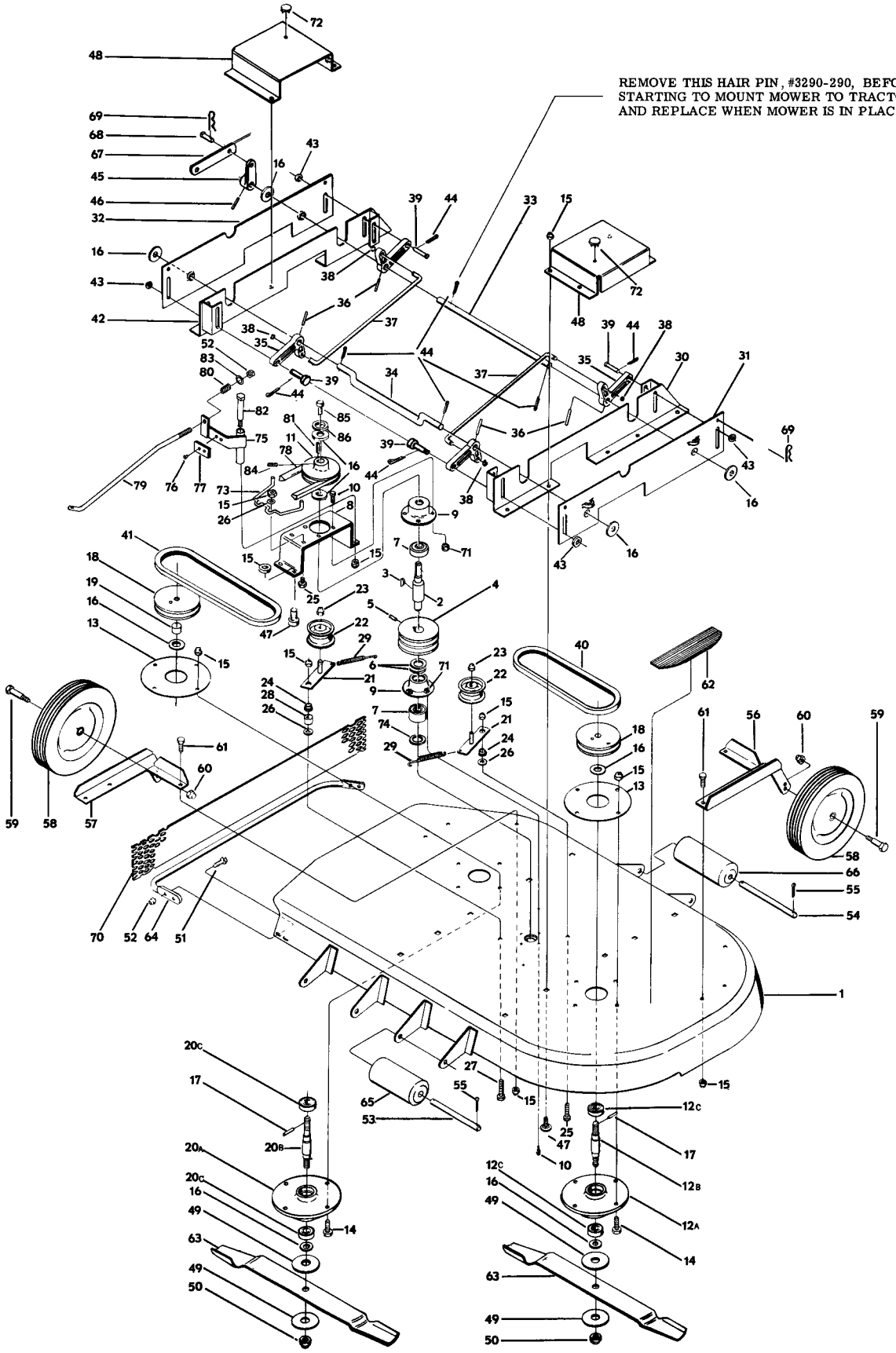
REMOVE THIS HAIR PIN, #3290-290, BEFORE STARTING TO MOUNT MOWER TO TRACTOR AND REPLACE WHEN MOWER IS IN PLACE.

MOWER ATTACHMENT PARTS LIST

Ref. No.	Part No.	Description	Qty.		Ref. No.	Part No.	Description	Qty.
1	7-0574	Housing	1		38	32120-35	Snap Ring	4
2	7-0633	Shaft, Blade Drive	1		39	7-0586	Lift Pin	4
3	3257-23	Key	1		40	7-0354	Belt	1
4	7-0634	Pulley	1		41	7-0073	Belt	1
5	3246-5	Set Screw	1		42	7-0583	Lower Right Hand Bracket	1
6	7-0126	Flat Washer	4		43	7-0052	Washer	4
7	251-5	Bearing	2		44	3272-11	Cotter Pin	8
8	7-0636	Bracket, Blade Pulley	1		45	7-0612	Lever	1
9	7-0640	Housing	2		46	32121-75(s)	Pin	1
10	32140-55(s)	Sems Unit	8		47	7-0250	Machine Screw	13
11	7-0627	Pulley, Main Drive	1		48	7-0622	Cover	2
12	7-0575	Left Hand Mower Spindle			49	7-0253	Washer	4
		Assembly (Complete)	1		50	32152-6(s)	Lock-Nut	2
		(Consists of)			51	3229-11	Machine Screw	4
	7-0287	a. Left Hand Spindle			52	32152-4(s)	Lock-Nut	5
		Housing	1		53	7-0590	Shaft	2
	7-0597	b. Left Hand Shaft	1		54	7-0277	Shaft	1
	251-5	c. Bearing	2		55	3272-7	Cotter Pin	7
13	7-0252	Washer	2		56	7-0593	Left Hand Bracket	1
14	322-4	Machine Screw	8		57	7-0592	Right Hand Bracket	1
15	32152-1(s)	Lock-Nut	32		58	241-87(s)	Wheel	2
16	7-0131	Washer	9		59	7-0262	Axle	2
17	32121-74(s)	Pin	2		60	32152-2(s)	Lock-Nut	2
18	7-0578	Pulley	2		61	322-2	Machine Screw	6
19	7-0577	Spacer	1		62	7-0623	Foot Pad	2
20	7-0576	Right Hand Mower Spindle			63	7-0587	Blade	2
		Assembly (Complete)	1		64	7-0588	Guard	1
		(Consists of)			65	7-0624	Roller	2
	7-0287	a. Right Hand Spindle			66	7-0276	Roller	1
		Housing	1		67	7-0591	Adjusting Link	2
	7-0598	b. Right Hand Shaft	1		68	7-0511	Pin	1
	251-5	c. Bearing	2		69	3290-255	Hairpin	5
21	7-0600	Idler Arm	2		70	7-0573	Mulcher	1
22	7-0136	Pulley	2		71	3290-291(s)	Pem Self Clinching Nut	8
23	3218-3	Nut	2		72	2410-23(s)	Button Plug	2
24	7-0083	Bushing	2		73	7-0637	Belt Guide	1
25	322-3	Machine Screw	3		74	7-0626	Spacer	1
26	3256-3	Washer	4		75	7-0642	Brake Band Assy	1
27	322-6	Machine Screw	1		76	3290-287(s)	Rivet	2
28	7-0581	Spacer	1		77	7-0643	Lining	1
29	7-0582	Spring	2		78	7-0630	Belt	1
30	7-0584	Lower Left Hand Bracket	1		79	7-0631	Brake Rod	1
31	7-0607	Upper Left Hand Bracket	1		80	7-0514	Spring, Compression	1
32	7-0606	Upper Right Hand Bracket	1		81	5-1077	Key	1
33	7-0611	Rear Pivot Shaft	1		82	7-0647	Shoulder Bolt	1
34	7-0610	Front Pivot Shaft	1		83	7-0533	Washer	1
35	7-0265	Bell Crank	4		84	3242-13(s)	Set Screw	1
36	32121-17(s)	Roll Pin	4		85	321-2	Bolt	1
37	7-0608	Lift Link	2		86	7-0152	Washer	1

TORO POWER MOWERS

Toro power mowers and Power Handle implements are designed and built to give years of precision performance . . . to make them "the best you can buy." And there's over 50 years of manufacturing experience to back them up.

One of Toro's most important objectives — and one which has helped make Toro the world's largest manufacturer of power mowers — is to provide the customer with complete local service and parts. This Toro has done through an extensive chain of service dealers, factory-trained to give you the most careful, competent care for your Toro work-saver.

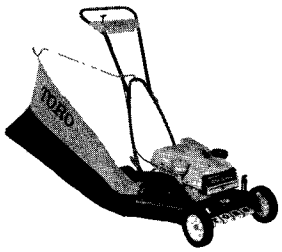

19" WHIRLWIND

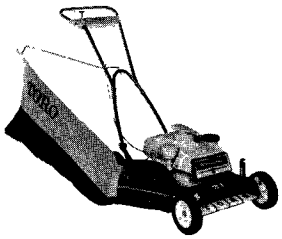

21" HAND PROPELLED WHIRLWIND

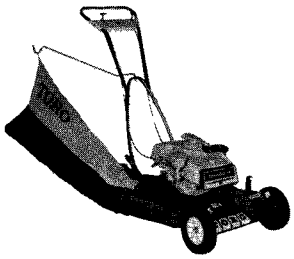

21" POW-R-DRIVE WHIRLWIND



21" HEVI-DUTY WHIRLWIND HAND PROPELLED



21" HEVI-DUTY WHIRLWIND SELF PROPELLED

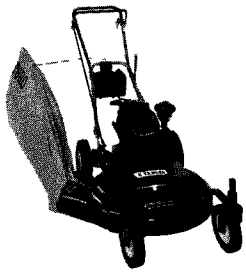

25" HEVI-DUTY WHIRLWIND

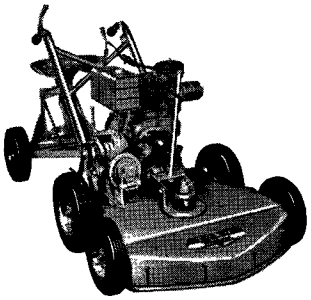

31" WHIRLWIND



34" HEVI-DUTY WHIRLWIND

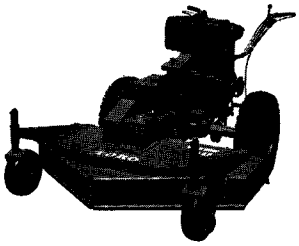

50" TROJAN

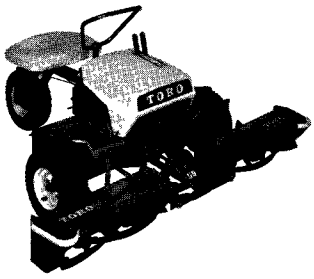

58" PROFESSIONAL

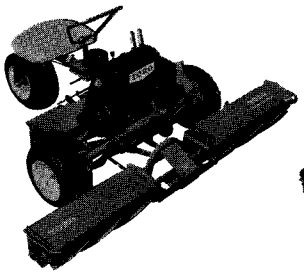

70" PROFESSIONAL

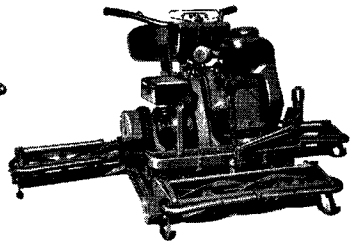

76" PROFESSIONAL

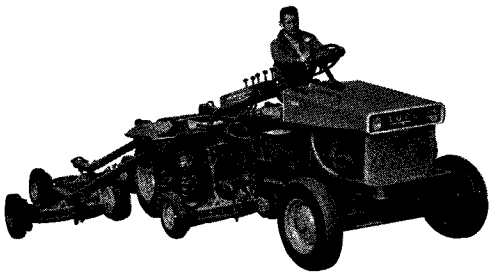

7 UNIT HYDRAULIC PARKMASTER

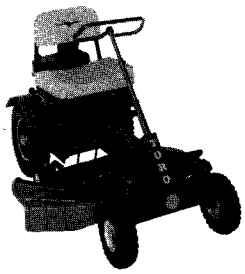

BIG RED

Real Mower or Rotary Mower . . . Self Propelled or Riding Mower . . . Whatever your preference in Power Mowers, Toro makes a model to fit your needs. Choose from Toro's complete line of Toro mowing equipment.

Toro has a mower that's just right for you. And Toro Mowers are the best you can buy.



21" SPORTLAWN

Form No. 172-67 **TORO MANUFACTURING CORPORATION – Minneapolis, Minnesota 55420, U.S.A.**

LITHO IN U. S. A

TORO ***Builds the right Power Mower for every need!***