Form No. 3445-150 Rev A

Recycling Kit

TimeCutter® 34in Riding Mower

Model No. 140-3536

Installation Instructions

Installation

Loose Parts

Use the chart below to verify that all parts have been shipped.

Procedure	Description	Qty.	Use
2	No parts required	–	Prepare the mower deck.
3	Baffle assembly Flange nut (5/16 inch) Carriage bolt (5/16 x 3/4 inch)	1 4 2	Install the kit.
4	Decal Mulching blade	1 2	Install the decal and mulching blades.

1

Preparing the Machine

No Parts Required

Procedure

1. Park the machine on a level surface.
2. Disengage the PTO, engage the parking brake, and move the motion-control levers outward to the NEUTRAL-LOCK position.
3. Shut off the engine and remove the key.

2

Preparing the Mower Deck

No Parts Required

Procedure

1. Remove the mower deck from the machine; refer to the *Operator's Manual* for the machine.
2. Turn the mower deck upside down.
3. Remove the existing mower blades; refer to the *Operator's Manual* for the machine.

© 2021—The Toro® Company
8111 Lyndale Avenue South
Bloomington, MN 55420

Register at www.Toro.com.

Original Instructions (EN)
Printed in the USA
All Rights Reserved

3445-150

3

Installing the Kit

Parts needed for this procedure:

1	Baffle assembly
4	Flange nut (5/16 inch)
2	Carriage bolt (5/16 x 3/4 inch)

Procedure

1. Install the baffle assembly to the right-hand side of the mower deck with 1 carriage bolt (5/16 x 3/4 inch) and 3 flange nuts (5/16 inch). Tighten the fasteners by hand.

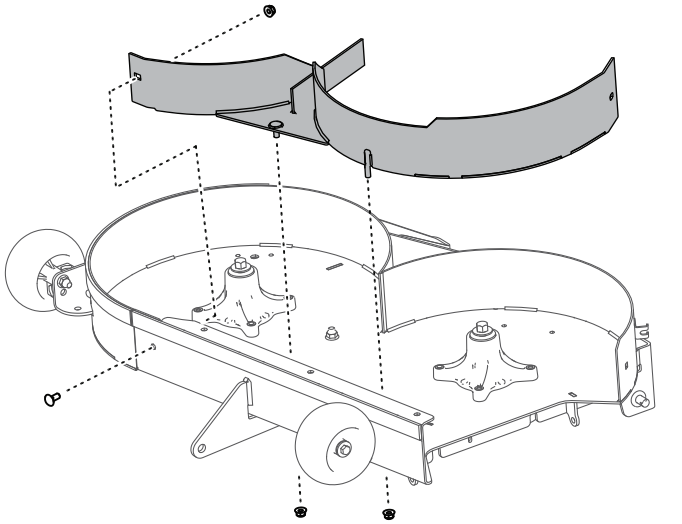

g349748

Figure 1

2. Secure the left side of the baffle to the deck using 1 carriage bolt (5/16 x 3/4 inch) and 1 flange nut (5/16 inch). Tighten the fasteners by hand.

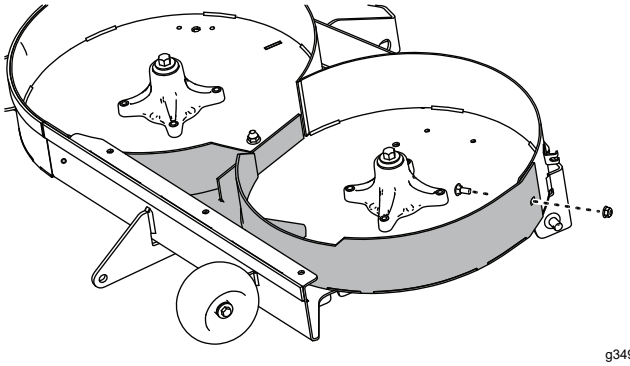

g349749

Figure 2

3. Tighten all fasteners.

4

Installing the Decal and Mulching Blades

Parts needed for this procedure:

1	Decal
2	Mulching blade

Procedure

1. Install the decal to the mower deck in the location shown in Figure 3.

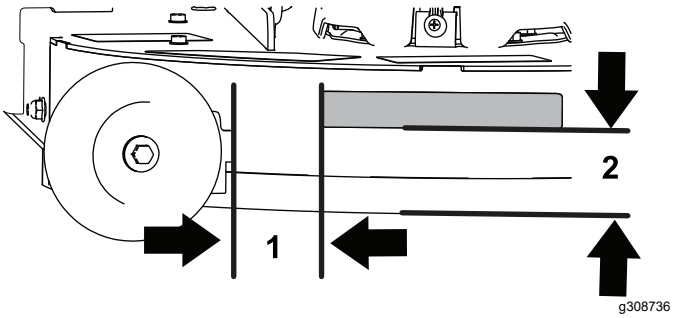

g308736

Figure 3

1. 7.25 cm (2.84 inches)
2. 6 cm (2.36 inches)

2. Install the mulching blades and mower deck on the machine; refer to the *Operator's Manual* for the machine.

Operation

Operating Tips

Using the Fast Throttle Setting

For best mowing and maximum air circulation, operate the engine at the FAST position. Air is required to thoroughly cut grass clippings, so do not set the height of cut so low as to totally surround the mower in uncut grass. Always try to have 1 side of the mower free from uncut grass, which allows air to be drawn into the mower.

Cutting a Lawn for the First Time

Cut grass slightly longer than normal to ensure that the cutting height of the mower does not scalp any uneven ground. However, the cutting height used in the past is generally the best one to use. When cutting grass longer than 15 cm (6 inches) tall, cut the lawn twice to ensure an acceptable quality of cut.

Cutting a Third of the Grass Blade

Cut only about a third of the grass blade. Cutting more than that is not recommended unless grass is sparse, or it is late fall when grass grows more slowly.

Alternating the Mowing Direction

Alternate the mowing direction to keep the grass standing straight. This also helps disperse clippings which enhances decomposition and fertilization.

Mowing at Correct Intervals

Grass grows at different rates at different times of the year. To maintain the same cutting height, mow more often in early spring. As the grass growth rate slows in mid summer, mow less frequently. If you cannot mow for an extended period, first mow at a high cutting height, then mow again 2 days later at a lower height setting.

Using a Slower Cutting Speed

To improve cut quality, use a slower ground speed in certain conditions.

Avoiding Cutting Too Low

When mowing uneven turf, raise the cutting height to avoid scalping the turf.

Stopping the Machine

If you must stop the forward motion of the machine while mowing, a clump of grass clippings may drop onto your lawn. To avoid this, move onto a previously cut area with the blades engaged or you can disengage the mower deck while moving forward.

Keeping the Underside of the Mower Clean

Clean clippings and dirt from the underside of the mower after each use. If grass and dirt build up inside the mower, cutting quality will eventually become unsatisfactory.

Maintaining the Blade(s)

Maintain a sharp blade throughout the cutting season because a sharp blade cuts cleanly without tearing or shredding the grass blades. Tearing and shredding turns grass brown at the edges, which slows growth and increases the chance of disease. Check the mower blades after each use for sharpness, and for any wear or damage. File down any nicks and sharpen the blades as necessary. If a blade is damaged or worn, replace it immediately with a genuine the manufacturer replacement blade.



Count on it.