Form No. 3439-695 Rev B

TORO®

Count on it.

Parts Catalog

Power Clear® 721 R-C

Commercial Snowthrower

Model No. 38754—Serial No. 406559535 and Up

Register at www.Toro.com.
Original Instructions (EN)

3439-695 B

Ordering Replacement Parts

To order replacement parts, please supply the part number, the quantity, and the description of each part desired.

Understanding Reference Numbers

Each identified part in an illustration has a reference number. The reference number for a part also appears in the parts list, along with other information about the part.

This catalog uses two special reference number formats, one to indicate parts in a service assembly and another to indicate the quantity of a given part in an illustration.

Service Assembly Reference Numbers

Parts in service assemblies have reference numbers in the form a:b. The a represents the reference number of the entire service assembly and the b represents a sequential number unique to each part within the service assembly.

For example, a wheel assembly might be identified by reference number 6, the tire by 6:1, the valve by 6:2, and the wheel by 6:3. When you order the assembly identified by reference number 6, you receive all parts identified by reference numbers 6:1,6:2, and 6:3. However, you may also order any part individually. Reference numbers of this type appear in illustration and in parts lists.

Reference Numbers Indicating Quantity

In an illustration, if a reference number indicates more than one part, the reference number has the form nX y. The n represents the quantity of the part, the X is the multiplication symbol, and the y represents the reference number.

For example, in an illustration, the reference number 2X 37 means that two of the parts identified by reference number 37 are indicated.

Contents

Chute and Wheel Assembly 4
Rotor Drive Assembly 6
Rotor Assembly 8
Engine Assembly 10
Fuel System and Carburetor Assembly 12
Intake and Exhaust Assembly 14
Ignition and Electrical Assembly 16
Crankcase Assembly 18
Governor Assembly 20
Piston and Head Assembly 22
Blower Housing and Shrouds Assembly 24
Shroud and Chute Assembly 26
Handle Assembly 28
Attachments and Accessories 30

© 2021—The Toro® Company
8111 Lyndale Avenue South
Bloomington, MN 55420

Contact us at www.Toro.com.
Printed in the USA.
All Rights Reserved

Chute and Wheel Assembly

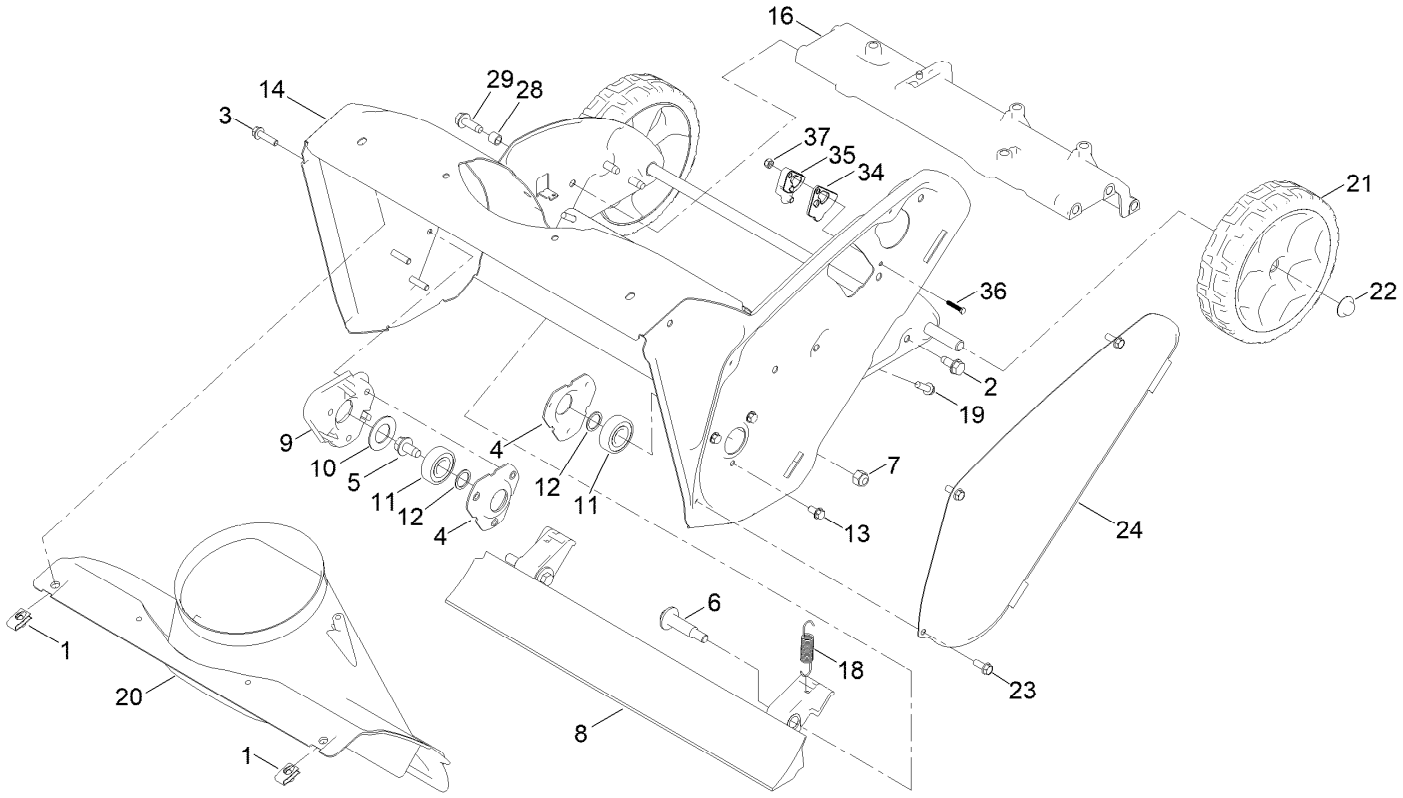

Chute and Wheel Assembly (continued)

Ref.	Part Number	Qty.	Description
1	107069	2	Clip
2	32144-11	4	Screw-HWH
3	32144-86	3	Screw-HWHTF
4	136-7134	2	Flange-Bearing
5	110-9380	1	Screw-HWH
6	136-7198	2	Bolt-Shoulder
7	3296-39	2	Nut-Lock, NI
8	133-5585	1	Blade-Scraper
9	114-3781	1	Spacer-Bearing, RH
10	110-9353	1	Washer-Rubber
11	38-7820	2	Bearing-Ball
12	52-7280	2	Washer-Thrust
13	32144-4	3	Screw-HWH
14	108-4868-03	1	Housing-Auger
16	130-9765	1	Brace-Frame
18	108-4906	2	Spring-Extension
19	46-8091	3	Screw-HWH
20	108-4871	1	Chute-Lower
21	138-8783	2	Wheel ASM, 7 Inch
22	32112-14	2	Nut-Push
23	32144-85	3	Screw-HWH
24	108-4893-03	1	Cover-Belt
28	136-7148	2	Spacer-Grommet
29	130-9795	2	Screw-HWHTF
33	94-4496	2	Screw-PPH ●
34	139-3564	1	Cap-Guide, Cable
35	139-3565	1	Guide-Cable
36	360-0272	1	Screw
37	3296-1	1	Nut-Lock

● Not illustrated

Rotor Drive Assembly

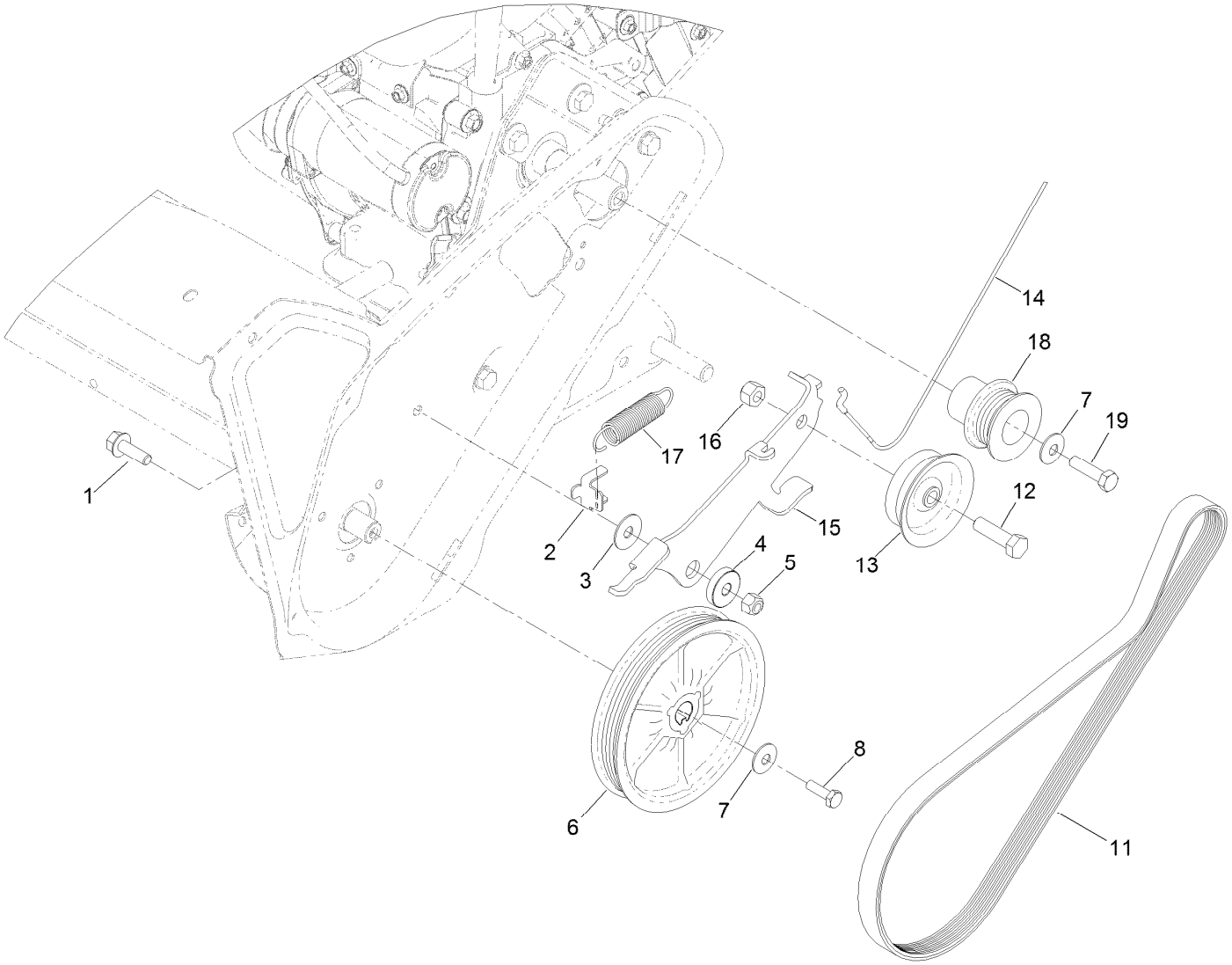

Rotor Drive Assembly (continued)

Ref.	Part Number	Qty.	Description
1	3234-29	1	Screw-HHF
2	136-7133	1	Clip-Spring
3	108-4925	1	Washer
4	108-4916	1	Bushing-Pivot
5	3296-29	1	Nut-Lock, NI
6	138-8720	1	Pulley-Rotor
7	3290-456	2	Washer-Belleville
8	140-1002	1	Screw-HH
11	138-8723	1	Belt-Poly V K
12	323-29	1	Screw-HH
13	139-3513	1	Pulley-Idler, Flat
14	140-1000	1	Cable-Clutch
15	136-7138	1	Arm-Idler
16	32152-2	1	Nut-Lock, Cone
17	121-6630	1	Spring-Extension
18	138-8722	1	Pulley-Engine
19	121-6646	1	Screw-HH

Rotor Assembly

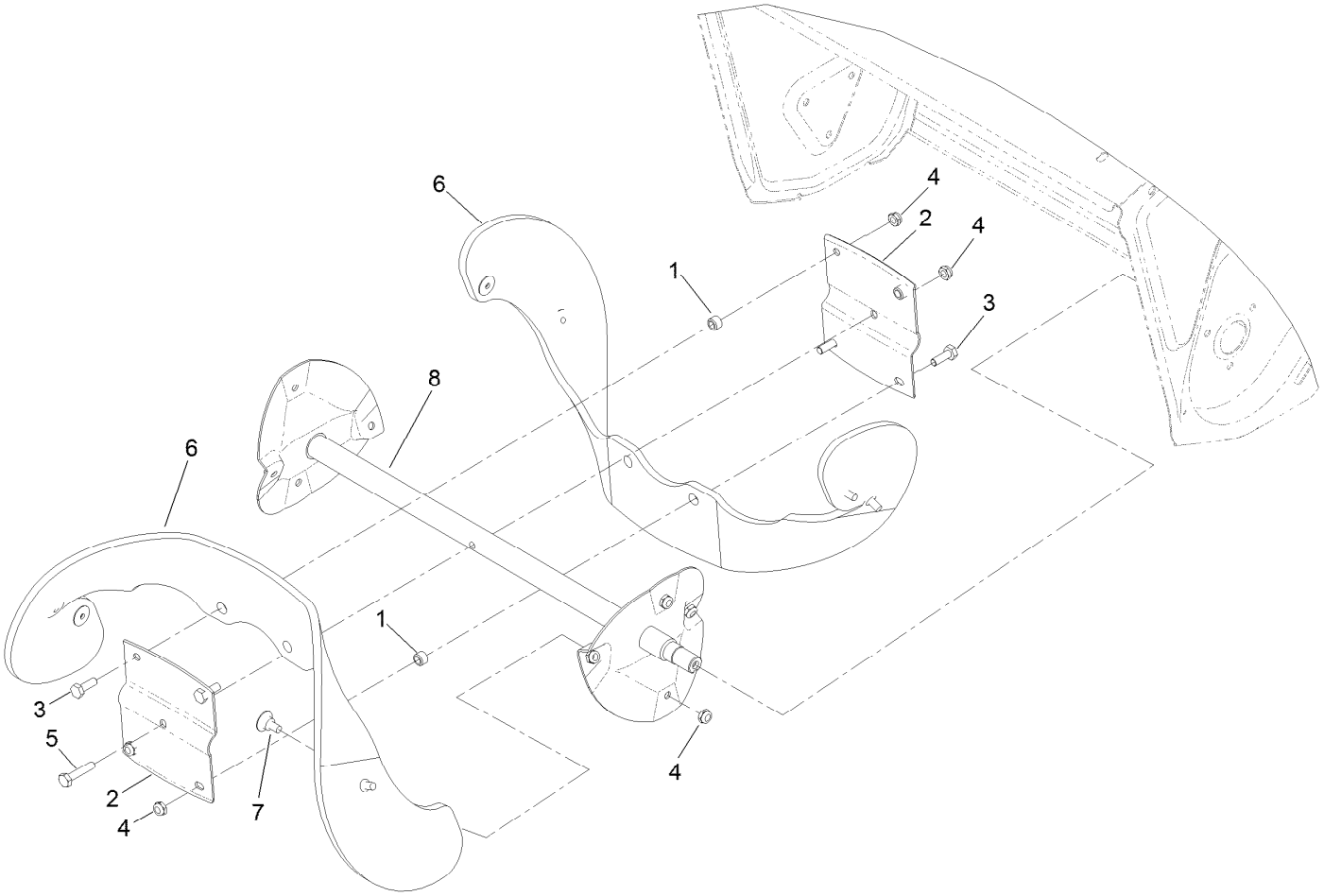

Rotor Assembly (continued)

Ref.	Part Number	Qty.	Description
1	136-7167	4	Spacer-Blade, Rotor
2	66-6600-03	2	Half-Rotor
3	321-5	4	Screw-HH
4	3296-56	13	Nut-Lock, NI
5	321-8	1	Screw-HH
6	125-1128	2	Blade-Rotor
7	125-1122	8	Screw
8	131-6488-03	1	Rotor

Engine Assembly

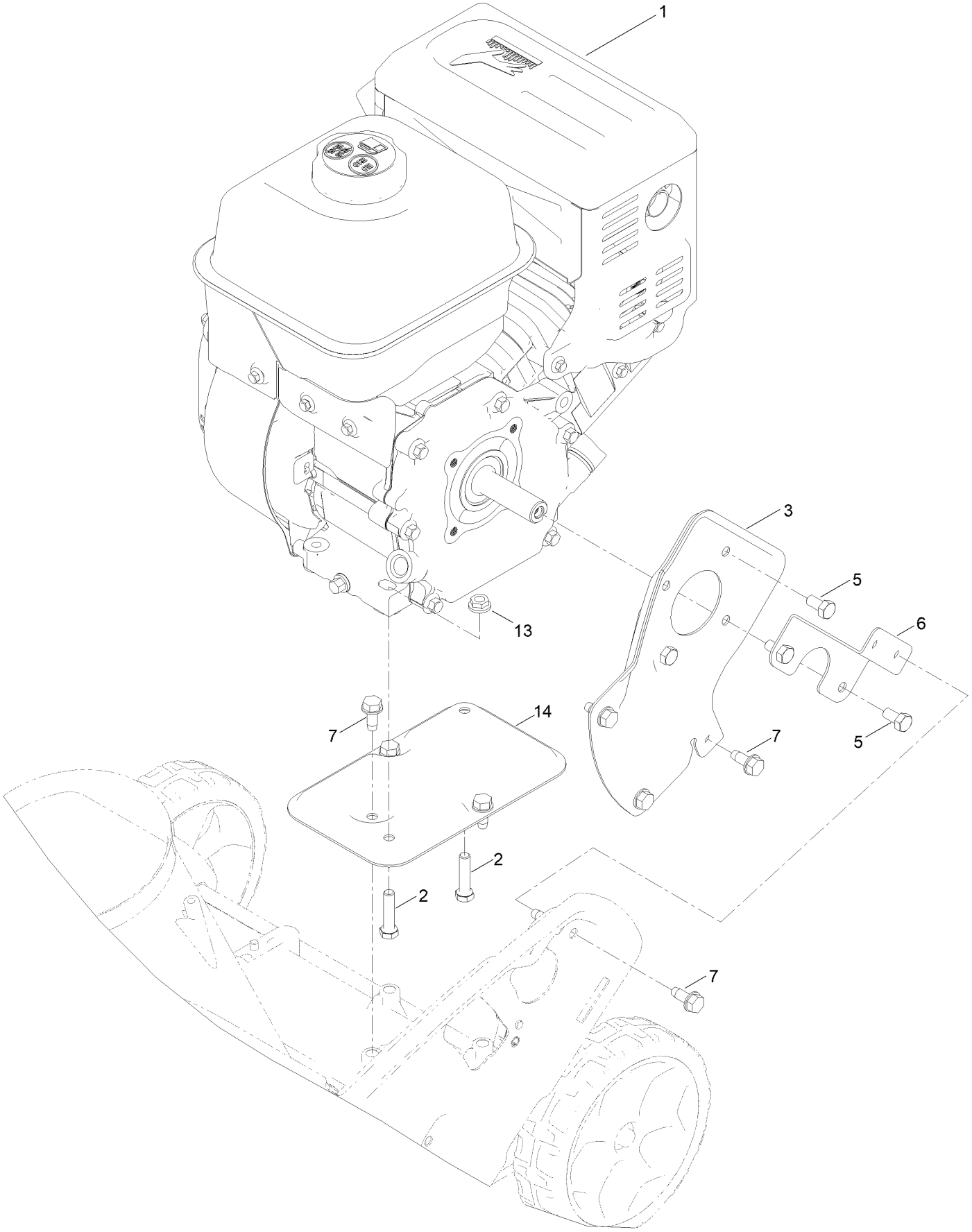

Engine Assembly (continued)

Ref.	Part Number	Qty.	Description
1	138-8766	1	Engine - G210Fs-4
2	322-17	2	Screw-HH
3	108-4892-03	1	Plate-Engine, PTO
5	99-5132	4	Bolt
6	110-9354-03	1	Support-Engine, Side
7	32144-11	7	Screw-HWH
13	32128-20	2	Nut-HF
14	117-6037-03	1	Support-Engine

Fuel System and Carburetor Assembly

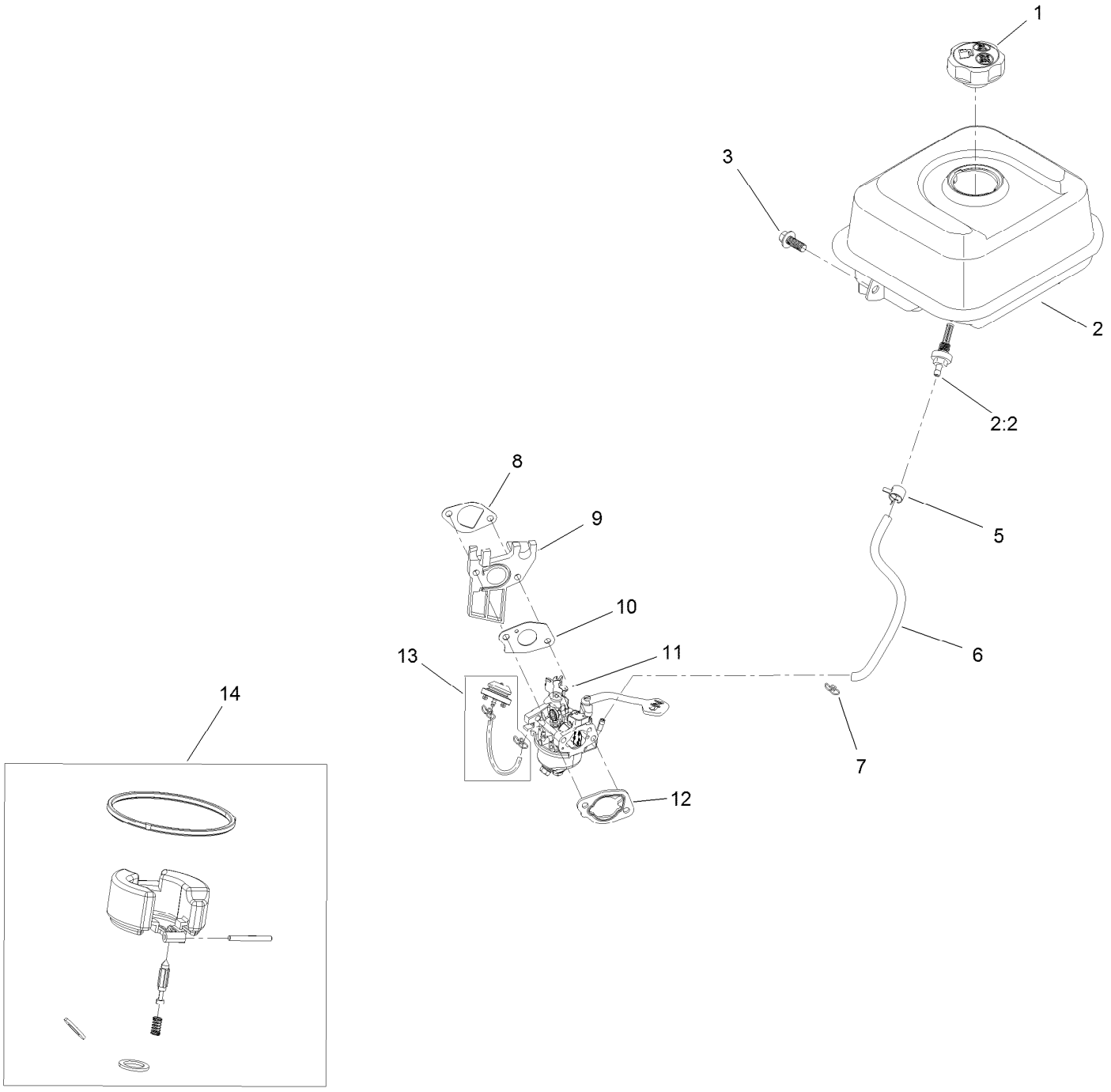

Fuel System and Carburetor Assembly (continued)

Ref.	Part Number	Qty.	Description
1	133-9823	1	Cap-Fuel
2	127-9497	1	Fuel Tank And Filter ASM
2:2	127-9065	1	Filter-Fuel
3	121-0294	1	Screw-HHF
5	127-9120	1	Clamp-Hose
6	127-9403	1	Hose-Fuel
7	121-0087	1	Clamp-Hose
8	121-0076	1	Gasket-Carburetor
9	121-0077	1	Insulator-Carburetor
10	121-0078	1	Gasket-Carburetor
11	127-9111	1	Carburetor ASM
12	121-0080	1	Gasket-Carburetor
13	127-9079	1	Primer Kit
14	127-9394	1	Internal Carb Service Kit
99	127-9301	1	High Altitude Kit - G210 ●

● Not illustrated

Intake and Exhaust Assembly

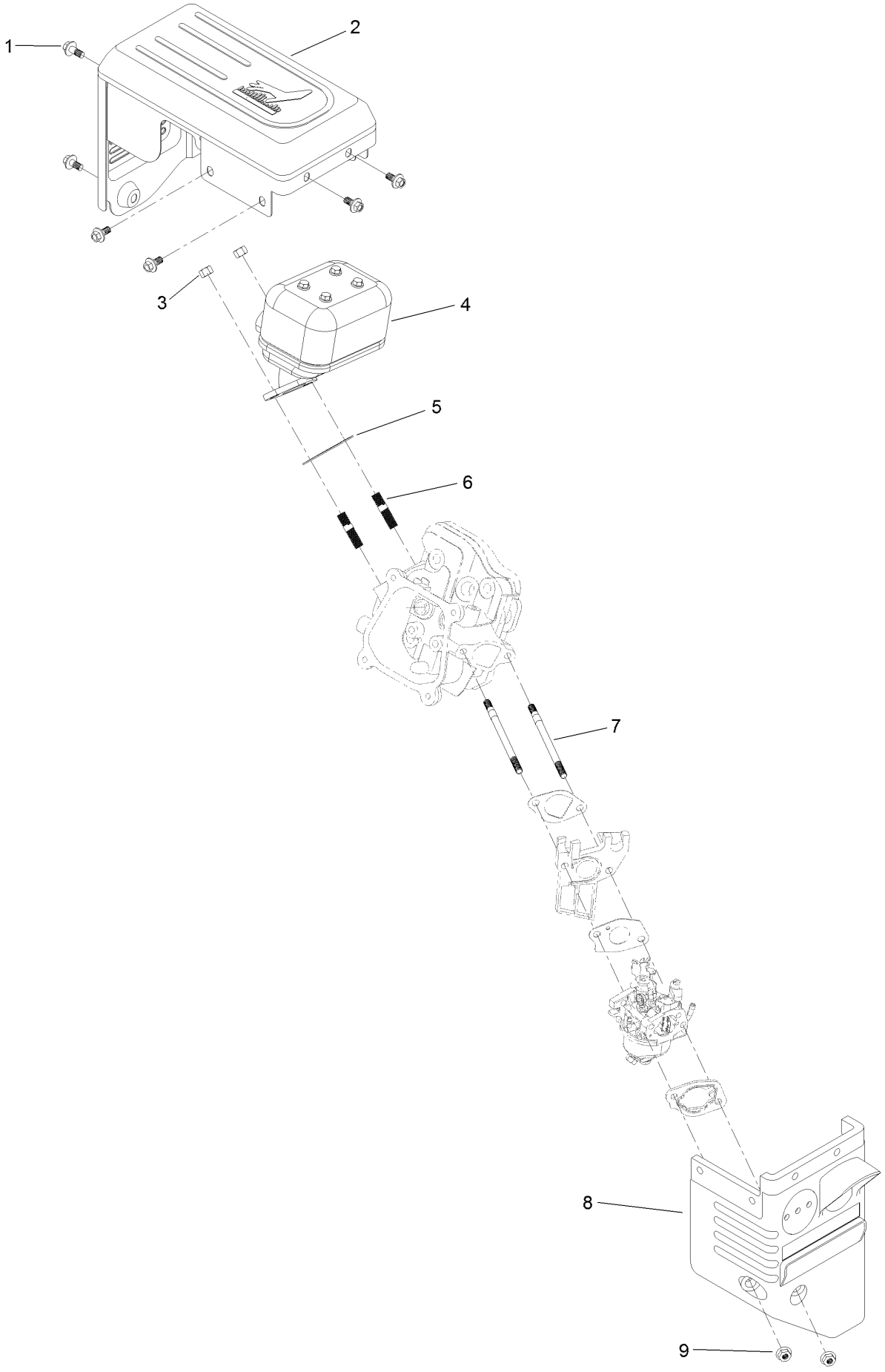

Intake and Exhaust Assembly (continued)

Ref.	Part Number	Qty.	Description
1	121-0294	6	Screw-HHF
2	136-7778	1	Guard-Muffler
3	121-0199	2	Nut-HH
4	133-9846	1	Muffler ASM
5	121-0167	1	Gasket-Exhaust
6	121-0464	2	Stud-Exhaust
7	121-4112	2	Stud-Intake
8	127-9112	1	Box-Heater
9	121-0308	2	Nut-Flange

Ignition and Electrical Assembly

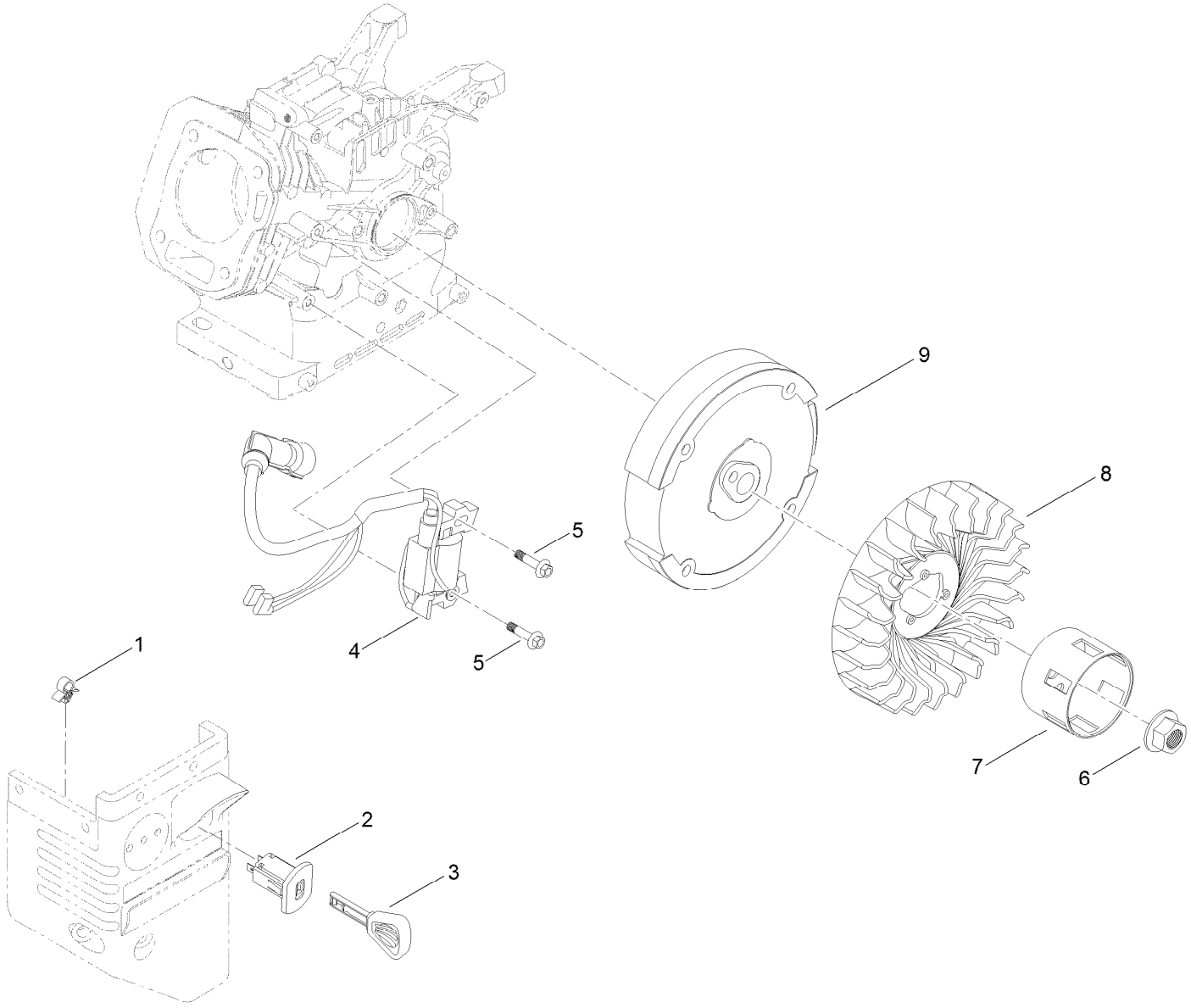

Ignition and Electrical Assembly (continued)

Ref.	Part Number	Qty.	Description
1	121-0326	1	Clip
2	121-0283	1	Switch-Key
3	117-7728	1	Key
4	136-7769	1	Ignition Coil ASM
5	121-0097	2	Screw-HHF
6	121-0047	1	Nut-Flange
7	127-9106	1	Cup-Starter
8	127-9002	1	Fan
9	127-9003	1	Flywheel-Recoil

Crankcase Assembly

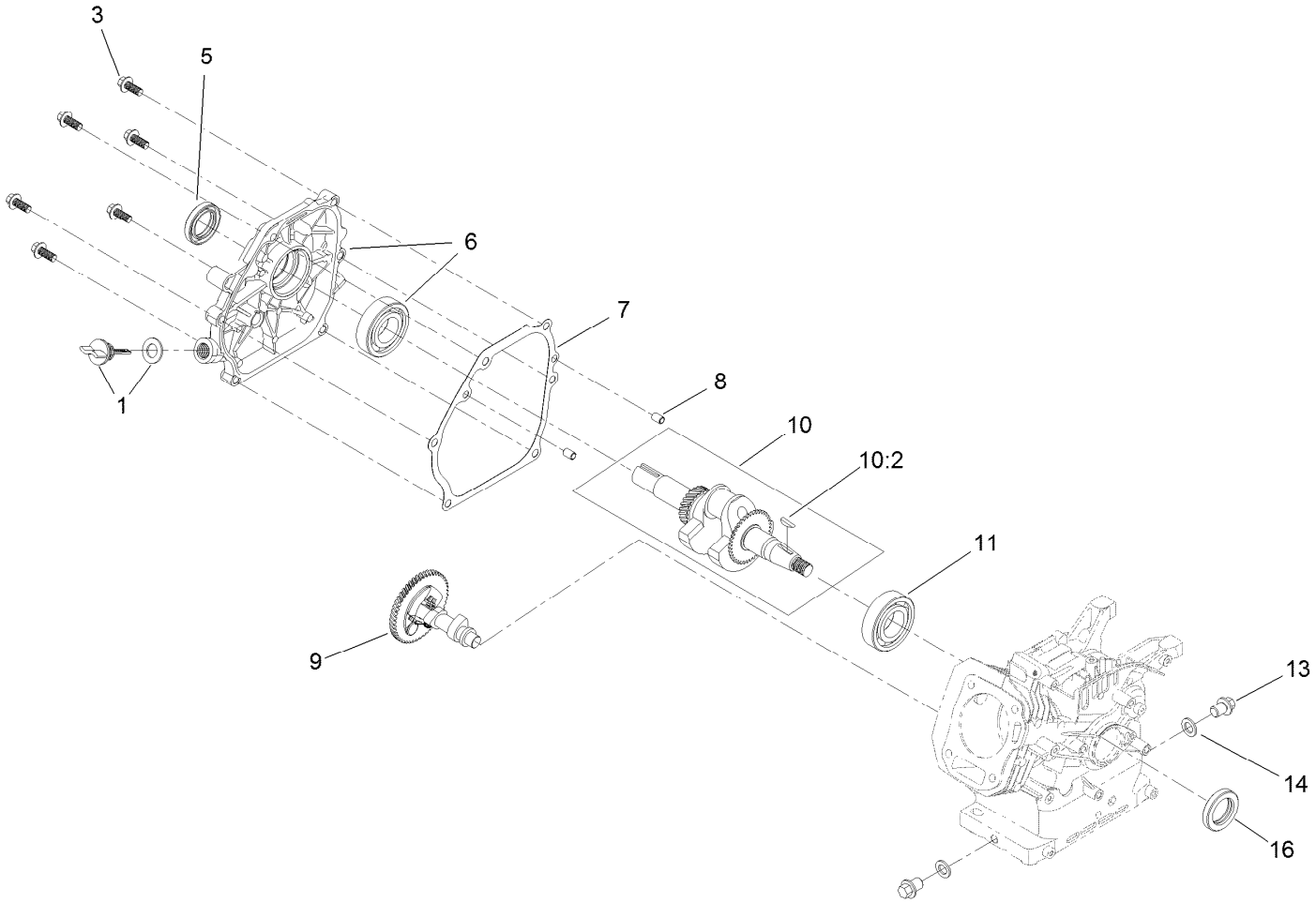

Crankcase Assembly (continued)

Ref.	Part Number	Qty.	Description
1	127-9374	1	Dipstick And O-Ring Kit
3	121-4114	6	Screw-HHF
5	121-0209	1	Seal-Oil
6	139-0693	1	Crankcase Cover ASM
7	121-0105	1	Gasket-Cover, Crankcase
8	121-0054	2	Pin-Dowel
9	139-0733	1	Camshaft
10	121-4292	1	Crankshaft ASM
10:2	120-4320	1	Key-Woodruff
11	121-0056	1	Bearing-Ball
13	121-0030	2	Screw-HHF
14	121-0048	2	Washer-Plain
16	133-9864	1	Seal-Oil

Governor Assembly

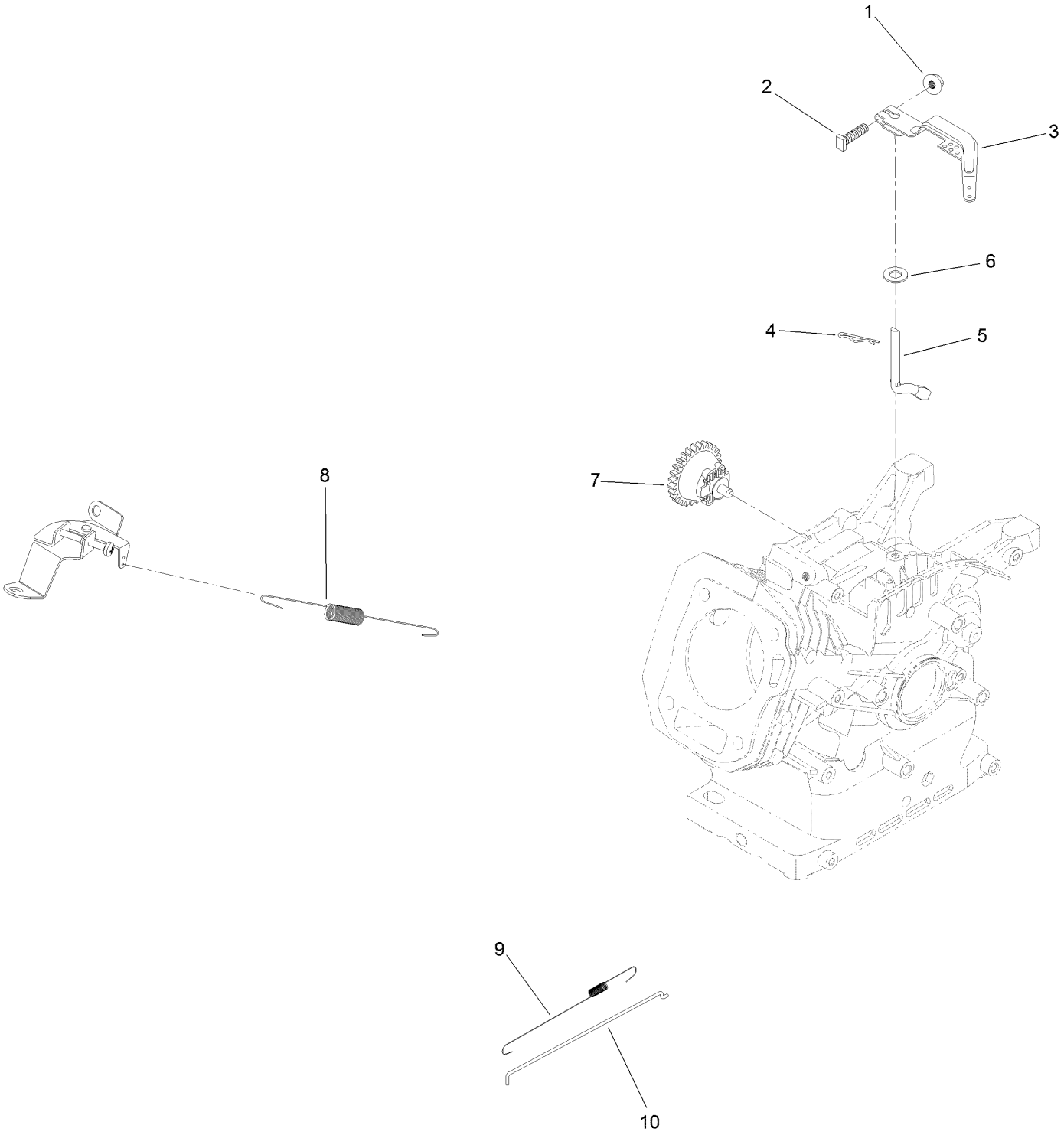

Governor Assembly (continued)

Ref.	Part Number	Qty.	Description
1	120-4236	1	Nut-Flange
2	120-4238	1	Bolt-Arm, Governor
3	121-0155	1	Arm-Governor
4	120-4256	1	Pin-Hair
5	136-7763	1	Shaft-Governor
6	121-0498	1	Washer-Plain
7	136-7762	1	Governor Gear ASM
8	139-0690	1	Spring-Governor
9	121-0153	1	Spring-Return, Throttle
10	121-0148	1	Rod-Governor

Piston and Head Assembly

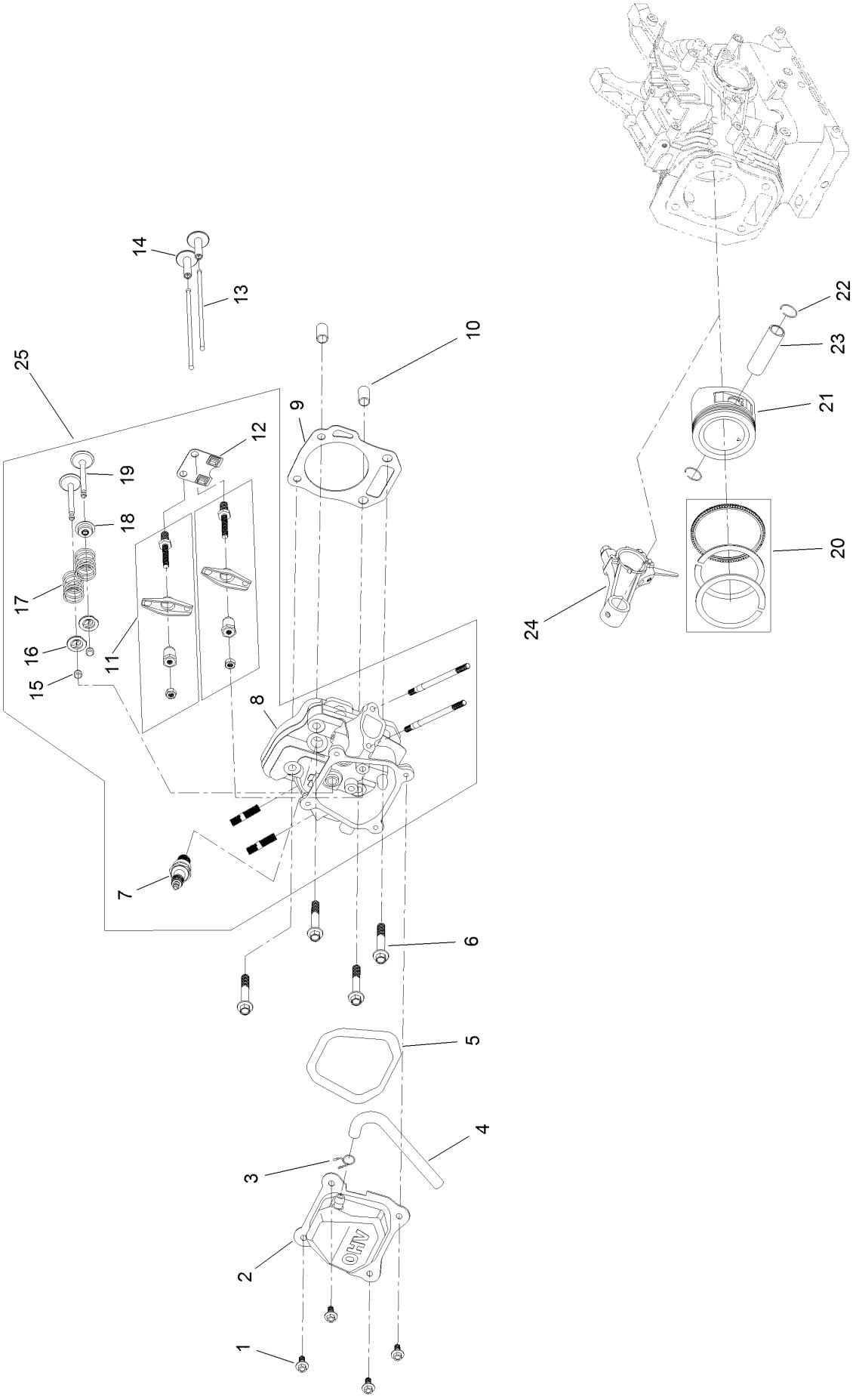

Piston and Head Assembly (continued)

Ref.	Part Number	Qty.	Description
1	120-4454	4	Screw-HHF
2	127-9094	1	Cover-Valve
3	127-9408	1	Clamp-Hose
4	139-0631	1	Tube-Breather
5	121-0109	1	Gasket-Cover, Valve
6	121-4110	4	Screw-HHF
7	81-3250	1	Spark Plug
8	127-9013	1	Head-Cylinder
9	127-9000	1	Gasket-Head, Cylinder
10	121-0053	2	Pin-Dowel
11	120-4475	2	Rocker Arm ASM
12	121-4120	1	Plate-Guide, Push Rod
13	121-4121	2	Rod-Push
14	127-9015	2	Tappet-Valve
15	121-4116	2	Rotator-Valve
16	121-4117	2	Retainer-Spring, Valve
17	127-9014	2	Spring-Valve
18	121-4202	1	Seal-Stem, Valve
19	127-9016	1	Valve Set
20	121-4295	1	Ring Set, Piston
21	121-4293	1	Piston
22	121-0313	2	Clip-Pin, Piston
23	121-4128	1	Pin-Piston
24	127-9017	1	Connecting Rod ASM
25	133-9839	1	Complete Head ASM

Blower Housing and Shrouds Assembly

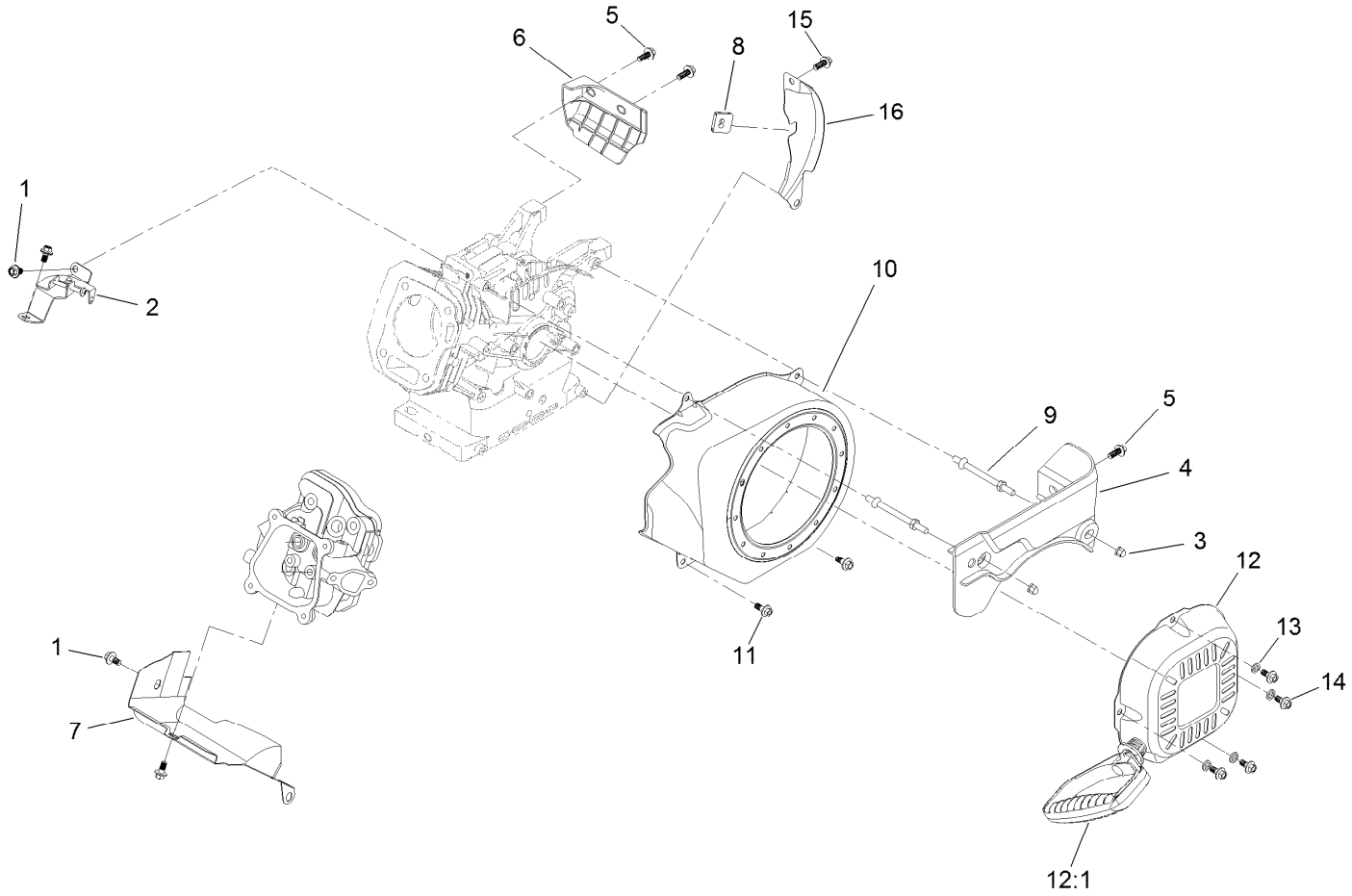

Blower Housing and Shrouds Assembly (continued)

Ref.	Part Number	Qty.	Description
1	121-0116	4	Screw-HHF
2	127-9396	1	Speed Control ASM
3	127-9383	2	Nut-Acorn
4	127-9406	1	Panel-Front
5	127-9123	3	Screw-HHF
6	133-1551	1	Panel-Side, Engine
7	127-9096	1	Shroud-Lower
8	121-0325	1	Grommet-Rubber
9	127-9110	2	Stud-Mount
10	127-9498	1	Shroud-Blower
11	121-0294	2	Screw-HHF
12	127-9402	1	Recoil Starter ASM
12:1	121-0287	1	Handle-Recoil
13	127-9380	4	Washer-Plain
14	127-9031	4	Screw-HHF
15	120-4454	1	Screw-HHF
16	133-1550	1	Shield-Flywheel

Shroud and Chute Assembly

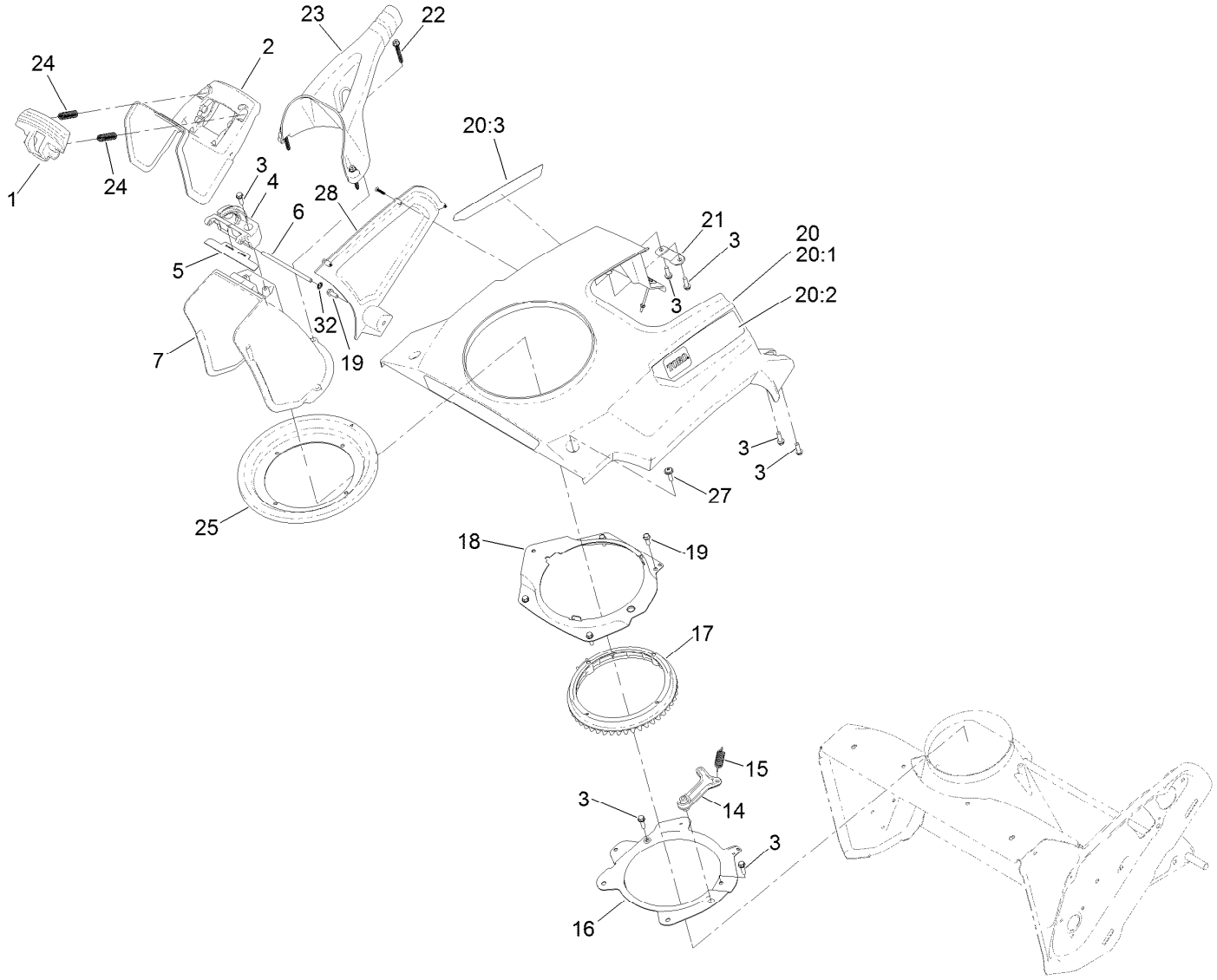

Shroud and Chute Assembly (continued)

Ref.	Part Number	Qty.	Description
1	108-4941	1	Trigger-Deflector
2	117-9121	1	Deflector-Chute, CE
3	46-8091	10	Screw-HWH
4	108-4942	1	Hinge-Ratchet, Deflector
5	114-3790	1	Seal-Deflector
6	136-8672	1	Pin-Hinge, Deflector
7	108-4939	1	Chute
14	108-4926	1	Pawl-Detent
15	80-4600	1	Spring-Extension
16	108-4883-03	1	Ring-Support, Chute
17	108-4922	1	Ring-Chute, Detent
18	108-4874-03	1	Retainer-Ring, Chute
19	32144-85	3	Screw-HWH
20		1	Shroud ASM, W/Decals ●
20:1	138-8788	1	Shroud ASM, W/Artwork
20:2	139-3533	1	Decal-Shroud LH
20:3	139-3532	1	Decal-Shroud RH
21	138-8757	2	Retainer-Shroud
22	114-3751	3	Screw-HWH, Plastite
23	110-9366	1	Handle-Chute
24	136-7136	2	Spring-Compression
25	114-3772	1	Seal-Ring, Chute
27	110-9361	2	Screw-PPH
28	138-8754	1	Cover-Side
32	104-8310	1	Ring-Retaining

● Not serviced separately

Handle Assembly

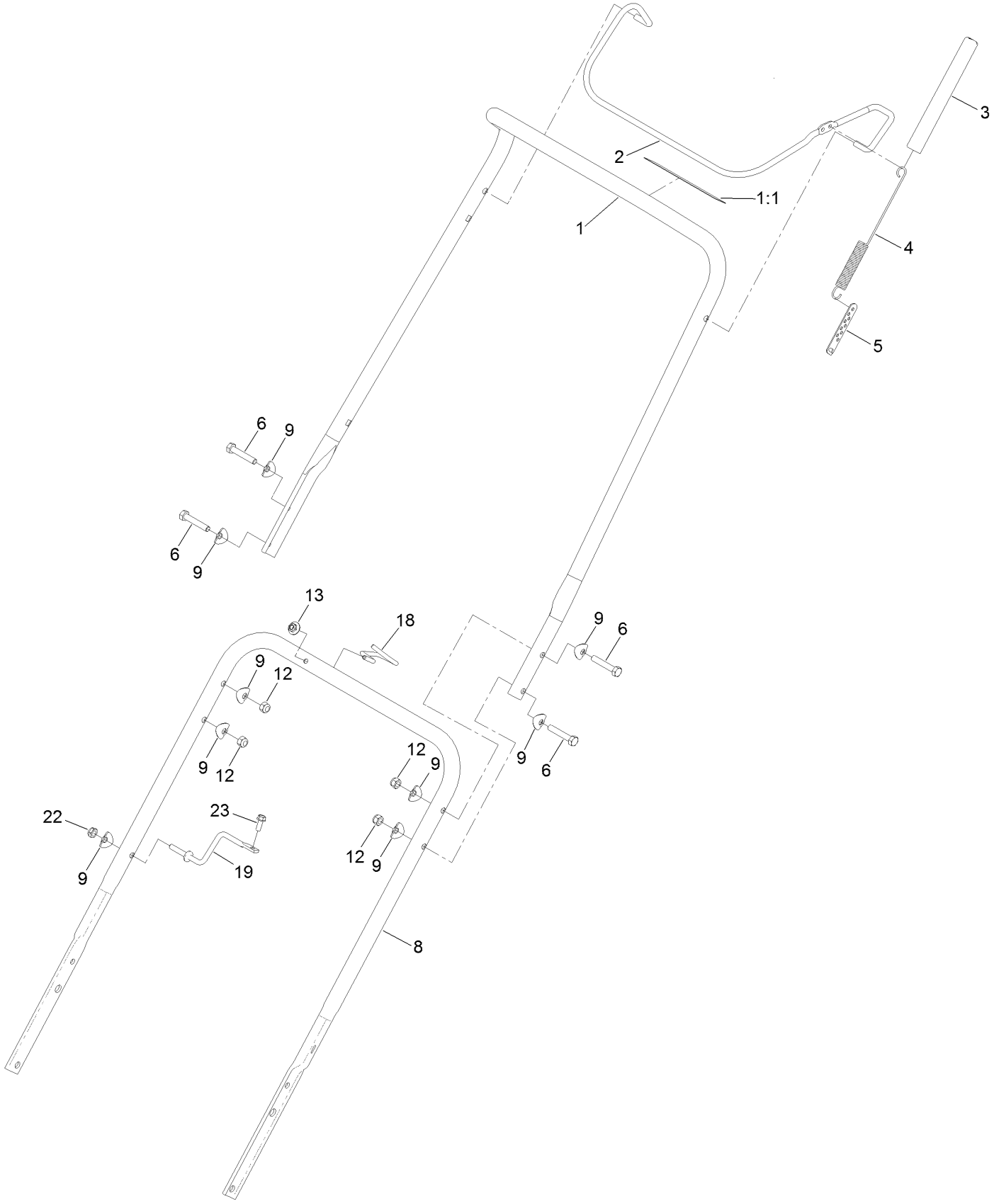

Handle Assembly (continued)

Ref.	Part Number	Qty.	Description
1	140-3744	1	Upper Handle ASM (W/ Decal)
1:1	94-2577	1	Decal-Drive, Rotor
2	114-3780-03	1	Bail-Control
3	114-3796	1	Cover-Spring
4	136-7146	1	Spring-Extension, Clutch
5	136-7126	1	Adjuster-Cable, Clutch
6	125-7944	4	Screw-HH
8	138-8760-03	1	Handle-Lower
9	107-3844	9	Washer
12	3296-72	4	Nut-Lock, NI
13	114-3778	1	Nut-HF
18	139-3543	1	Guide-Rope
19	139-3504	1	Support-Switch Box
22	3296-47	1	Nut-Lock, NI
23	32144-85	1	Screw-HWH

Attachments and Accessories

For 38754 Power Clear 721 R-C Commercial Snowthrower

Product Name	Model/Part
Engine Maintenance Kit	138-0699
Long Life Rotor Blade Kit	38205
Paddle Replacement Kit	38261
Case of 24 20-Ounce Bottles 5W30 Winter Oil	38908
Toro Snow Oil 0W30 Synthetic 20-Ounce Bottle	38913
Toro Single Stage Cover	490-7464
Plain Single Stage Cover	490-7465

Notes:



Count on it.