FORM NO. 3310-617

TORO®

MODEL NO. 23205-50001 & UP

PARTS CATALOG

25" WHIRLWIND® HEVI-DUTY

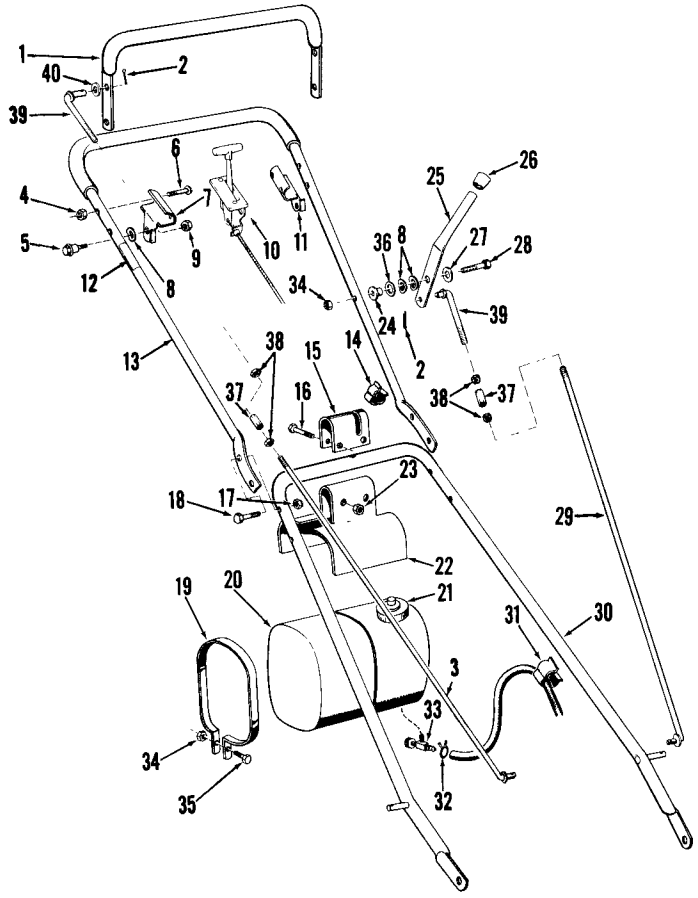

HANDLE ASSEMBLY

Ref. No.	Part No.	Description	No. Used
1	19-7180	Bail & Grip Assembly	1
2	3272-6	Pin, Cotter	2
3	10-9360	Control Rod, Lower	1
4	3296-2	Locknut	4
5	5-2490	Screw, Shoulder	2
6	3251-11	Screw, Machine	4
7	3-7371	Bracket, Control Bail	1
8	3290-211	Washer, Spring	4
9	3296-47	Locknut	2
10	23-4600	Control, Throttle	1
11	3-7372	Bracket, Control Bail	1
12	12-9230	Decal	1
13	19-7210	Handle & Grip Assembly	1
14	5-0748	Clamp	1
15	22-5060	Clamp, Fuel Tank	1
16	322-7	Capscrew	2
17	32146-17	Locknut	4
18	321-8	Capscrew	4
19	3-6346	Strap, Tank	2
20	222-14	Tank	1
21	222-15	Cap, Tank	1

Ref. No.	Part No.	Description	No. Used
22	3-6345	Bracket, Fuel Tank	1
23	32146-5	Locknut	2
24	3-7811	Pivot	1
25	5-2154	Handle, Cutter	1
26	5-0747	Button, Plug	1
27	3256-22	Washer	1
28	321-10	Capscrew	1
29	22-6030	Control Rod, Lower	1
30	22-5040	Lower Handle Assembly	1
31	3-5181	Clamp	1
32	2210-87	Clamp, Hose	1
33	304-71	Shut Off Valve	1
34	32146-17	Locknut	3
35	321-10	Capscrew	2
36	3256-25	Washer	1
37	3-6481	Sleeve	2
38	3217-6	Nut	4
39	3-8197	Cutter Link	2
40	3-6712	Spacer	1
*	3-8769	Loose Parts Kit	1

*Not Illustrated

Copyright 1974 by
The Toro Company
Bloomington, Minnesota 55420 U S A.

Price $1.00

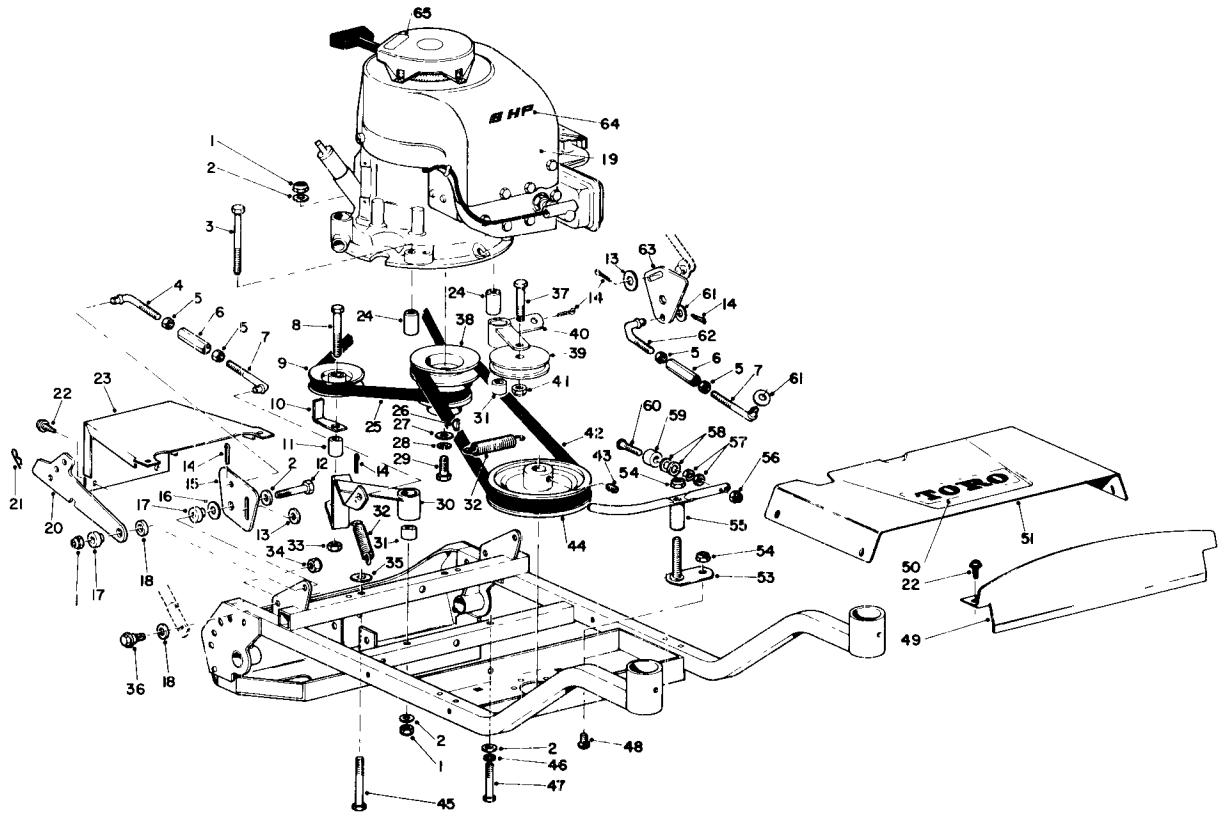

ENGINE AND FRAME ASSEMBLY

Ref No.	Part No.	Description	No. Used
1	32146-5	Locknut	5
2	3256-23	Washer	6
3	322-23	Capscrew	2
4	5-1493	Link, Traction	1
5	3217-6	Nut	4
6	3-6481	Sleeve	2
7	3-8197	Link	2
8	323-12	Capscrew	1
9	3-4243	Pulley	1
10	3-6471	Hook	1
11	23-7610	Spacer	1
12	32104-34	Screw	2
13	3-6712	Spacer	2
14	3272-6	Cotter Pin	5
15	5-1492	Bell Crank	1
16	5-0744	Washer	2
17	3-7811	Pivot	4
18	3-3287	Washer	4
19	23-7910	Engine	1
20	~~3-2656~~	Latch 5-2946	2
21	3290-250	Hair Pin Cotter	2
22	32104-77	Self Tapping Screw	10
23	5-3482	Rear Shroud	1

Ref No.	Part No.	Description	No. Used
24	3-8164	Pivot	2
25	3-2733	Belt	1
26	3257-17	Key	1
27	3256-4	Washer	1
28	3253-21	Lockwasher	1
29	3211-4	Capscrew	1
30	5-2147	Arm & Bushing (Incl. Ref. # 31)	1
31	256-77	Bushing	2
32	3-8135	Spring	2
33	32146-2	Locknut	1
34	32146-5	Locknut	2
35	4-2320	Spacer	2
36	5-2490	Screw	2
37	3-7283	Capscrew	1
38	23-7620	Pulley	1
39	244-63	Pulley	1
40	5-2127	Arm & Bushing (Incl. Ref. # 31)	1
41	32146-12	Locknut	1
42	3-8095	Belt	1
43	3246-3	Set Screw	2
44	3-8423	Pulley	1

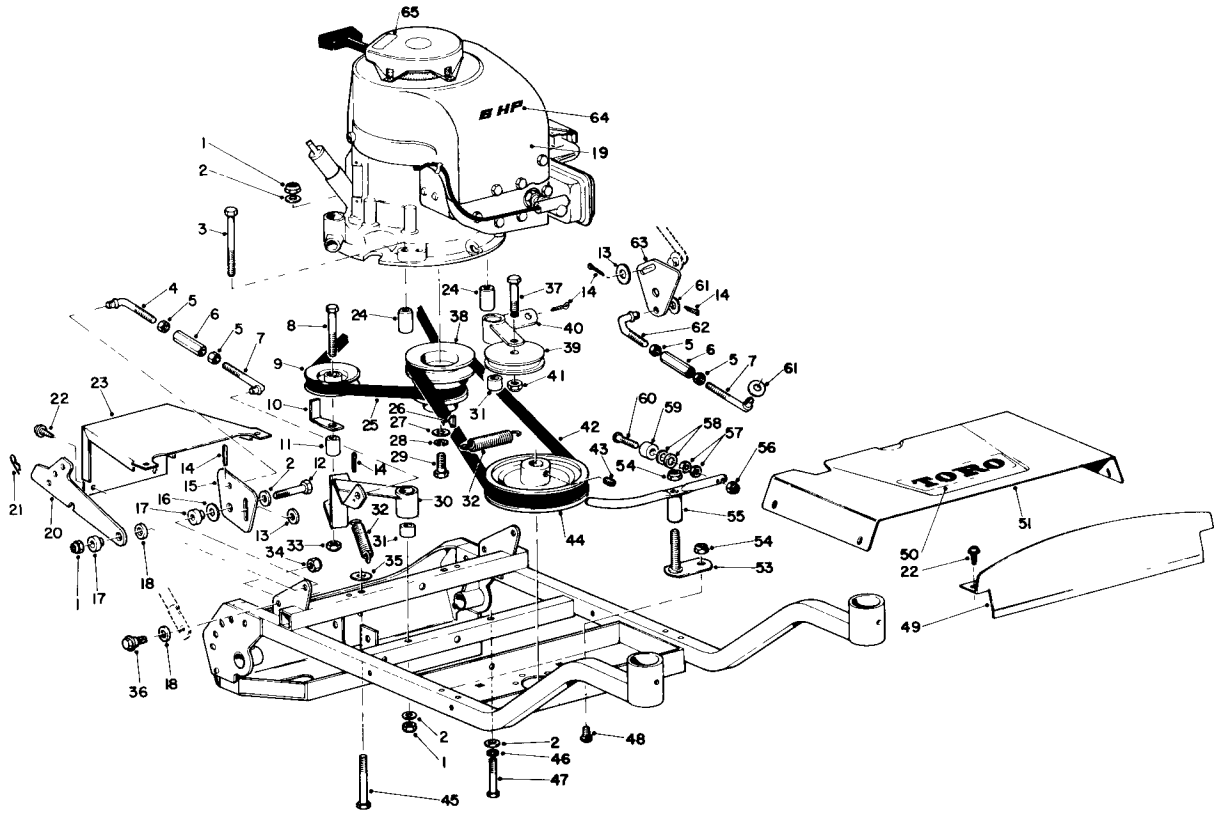

ENGINE AND FRAME ASSEMBLY (Continued)

Ref. No	Part No.	Description	No. Used
45	322-11	Capscrew	1
46	3253-4	Lockwasher	1
47	322-9	Capscrew	1
48	3231-21	Carriage Bolt	1
49	3-8151	Shroud Panel	1
50	3-8154	Decal	1
51	5-2148	Front Shroud	1
53	3-8306	Pivot Base Assembly	1
54	32146-2	Locknut	2
55	5-2126	Brake Arm	1

Ref. No.	Part No.	Description	No. Used
56	3296-12	Locknut	1
57	3217-26	Nut	2
58	3256-2	Washer	2
59	237-45	Bumper	1
60	3251-7	Screw	1
61	3-3846	Washer	2
62	5-2142	Link	1
63	22-6020	Bell Crank	1
64	23-7650	Decal	1
65	22-5180	Decal Caution	1

*Not Illustrated

Spark Arrestor Muffler Optional Equipment

*	23-8960	Muffler	1
*	3290-154	Conduit Locknut	1
*	2811-6	45° Steel Elbow	1

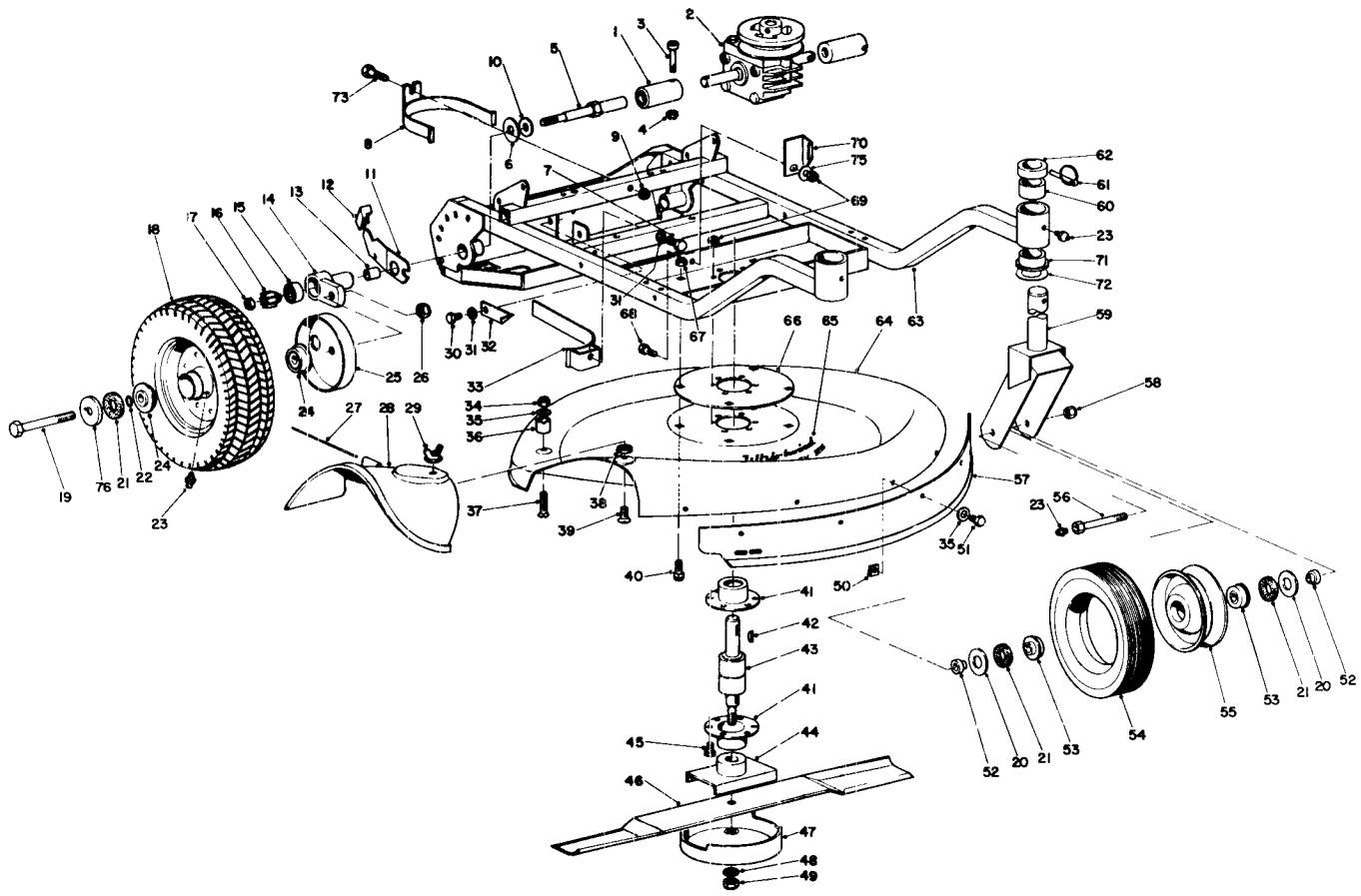

FRAME AND CUTTER HOUSING ASSEMBLY

Ref. No.	Part No	Description	No. Used
1	5-2138	Clutch Assembly R.H.	1
*	5-2140	Clutch Assembly L.H	1
2	3-8699	Transmission Assembly	1
3	5-1491	Screw	2
4	3296-2	Locknut	2
5	5-2131	Drive Spindle, Right	1
*	5-2132	Drive Spindle, Left	1
6	3-8115	Thrust Washer	2
7	322-7	Capscrew	1
8	5-2145	Belt Retainer W.A.	1
9	3296-47	Locknut	1
10	252-73	Washer	2
11	5-2118	Spring Arm Assy., Right	1
*	5-2117	Spring Arm Assy., Left	1
12	5-0657	Knob, Right	1
*	5-0656	Knob, Left	1
13	256-1	Bushing	2
14	3-8117	Pivot Arm Assy., Right	1
*	3-8116	Pivot Arm Assy., Left	1
15	251-183	Bearing	2
16	3-7829	Pinion Kit	1
17	3220-3	Jam Nut, Right	1
*	3220-16	Nut, Special, L.H.	1
18	3-9219	Rear Wheel Assy., (Incl. Ref 24)	2
19	3213-12	Capscrew	2

Ref. No.	Part No	Description	No. Used
20	3256-28	Washer	4
21	3-4417	Washer	6
22	237-30	"O" Ring	2
23	302-5	Grease Fitting	6
24	251-191	Bearing	4
25	3-8127	Wheel Cover	2
26	3296-28	Locknut	2
27	3-1176	Hinge Pin	1
28	3-0674	Deflector	1
29	3-4808	Wing Nut	1
30	322-3	Capscrew	2
31	3253-4	Lockwasher	3
32	5-1592	Belt Retainer	1
33	23-7580	Belt Retainer W.A.	1
34	32149-2	Locknut	2
35	3256-2	Washer	7
36	3-5528	Spacer	2
37	32108-7	Screw	2
38	3290-147	Pal Nut	1
39	32108-21	Screw	1
40	3231-12	Carriage Bolt	4
41	3-1931	Bearing Housing	2
42	3257-23	Key	2
43	3-4533	Spindle Bearing	1
44	3-5220	Retainer, Blade	1

*Not Illustrated

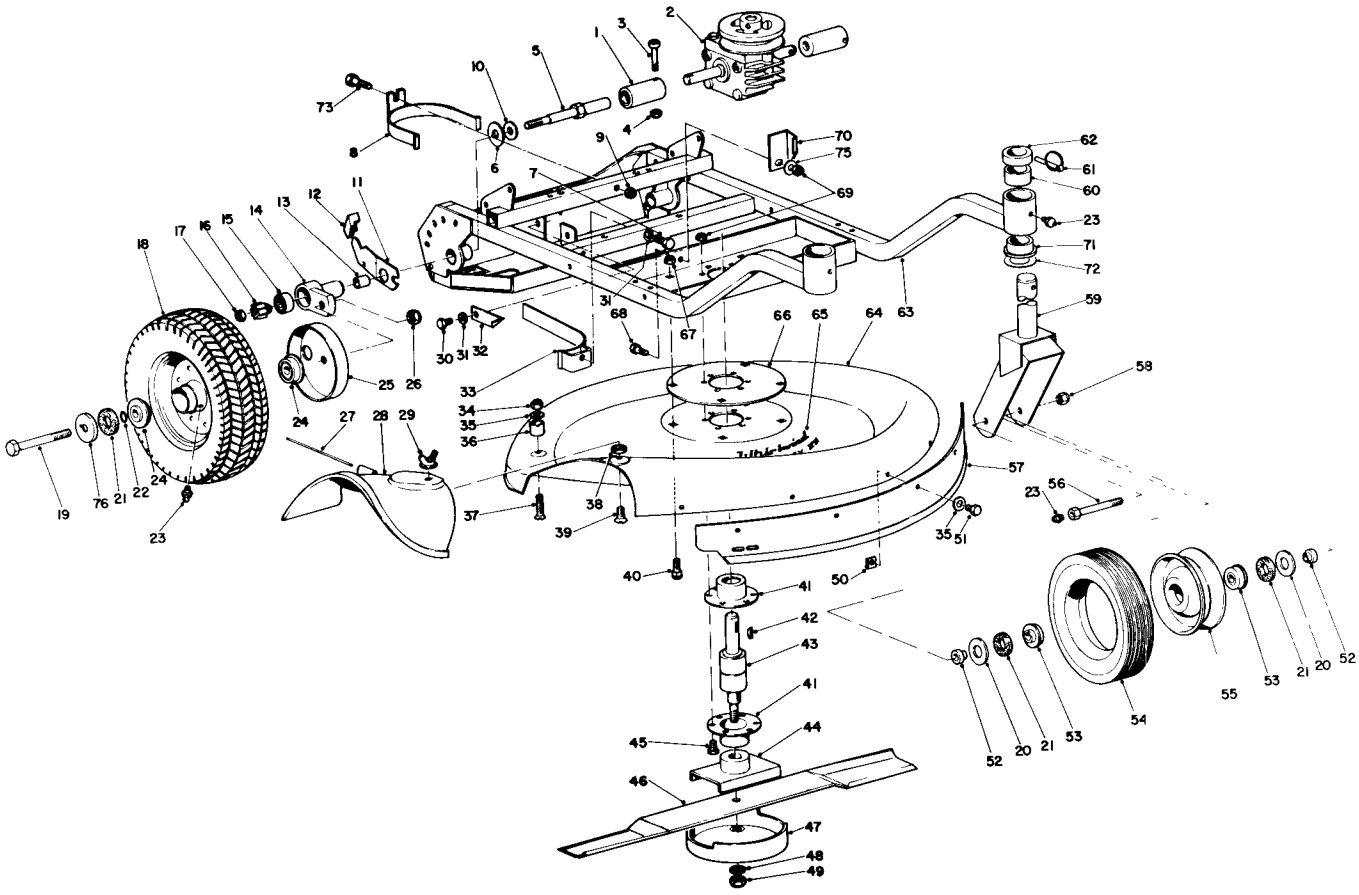

FRAME AND CUTTER HOUSING ASSEMBLY (Continued)

Ref No.	Part No.	Description	No. Used
45	322-5	Capscrew	6
46	5-4554	Blade	1
47	3-3803	Cup	1
48	3253-27	Lockwasher	1
49	3296-19	Locknut	1
50	3290-192	Special Nut	1
51	321-2	Capscrew	5
52	10-9270	Spacer	4
53	251-180	Bearing	4
54	234-18	Tire	2
55	2-5499	Wheel (Incl. Ref. # 53)	2
56	10-9300	Axle Bolt	2
57	3-5536	Housing Cover	1
58	32146-13	Locknut	2
59	10-9380	Caster Fork	2
60	256-101	Bushing	2

Ref. No.	Part No.	Description	No Used
61	3290-243	Klik Pin	2
62	10-9310	Spacer	10
63	10-9450	Frame W.A.	1
64	3-4562	Housing	1
65	3-8156	Decal	1
66	3-2118	Plate	1
67	32146-2	Locknut	4
68	322-2	Capscrew	1
69	32146-5	Locknut	7
70	3-8308	Belt Retainer	1
71	256-148	Bushing	2
72	3-0737	Washer	2
73	322-8	Capscrew	1
75	3256-23	Washer	1
76	3-4416	Slinger	2

GIANT BAGGING KIT NO. 23-9710

Ref. No.	Part No.	Description	No. Used
*	23-9730	Bag Hanger Rod	1
*	11-0650	Tube	1
*	2410-29	Cap	1

Ref. No.	Part No.	Description	No. Used
*	6-5340	Bag Chute	1
*	5-8729	Giant Bag Replacement	1

*Not Illustrated

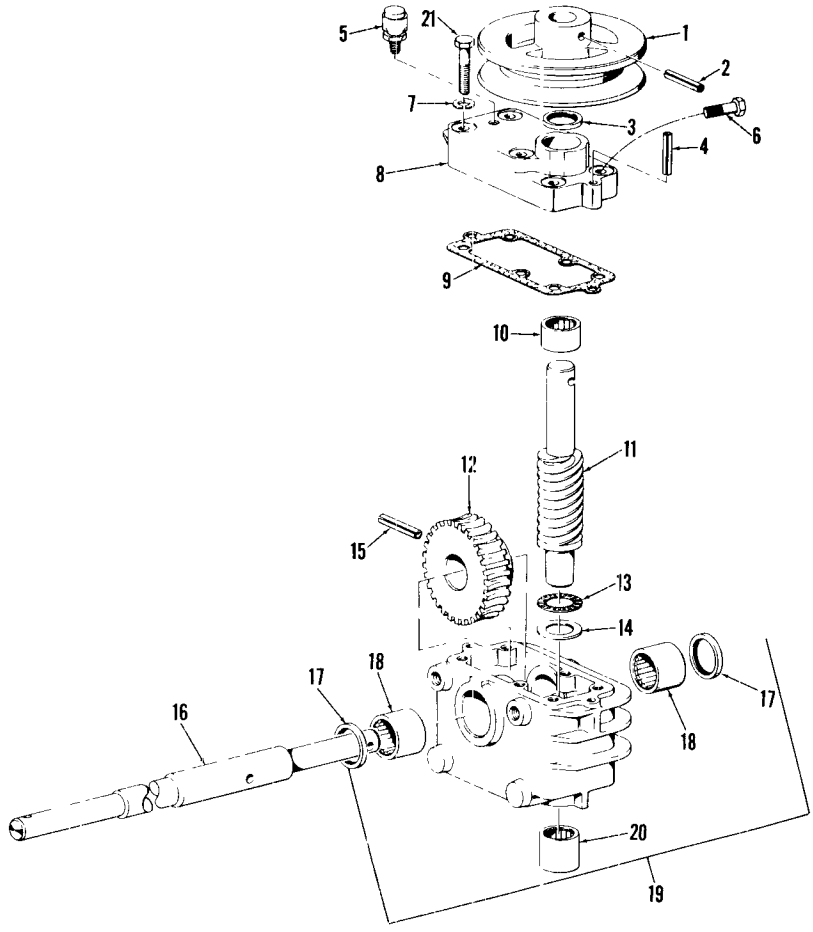

GEAR CASE ASSEMBLY

Ref No.	Part No.	Description	No. Used
1	5-1584	Pulley	1
2	32121-6	Pin	1
3	253-85	Seal, Oil	1
4	32121-2	Pin	2
5	302-14	Vent	1
6	321-8	Screw	2
7	3253-3	Lockwasher	6
8	5-1556	Cover, Gear Case	1
9	3-4512	Gasket	1
10	252-64	Bearing	1
11	5-1563	Shaft, Worm	1

Ref. No	Part No.	Description	No. Used
12	5-1565	Gear Worm	1
13	252-58	Bearing, Thrust	1
14	252-59	Washer, Thrust	1
15	32121-12	Pin	1
16	5-2123	Drive Shaft	1
17	253-84	Seal, Oil	2
18	252-6	Bearing	2
19	3-7539	Gear Case Assy. w/Bearing (Incl. Ref. # 17,18 & 20)	1
20	252-57	Bearing	1
21	321-9	Capscrew	4

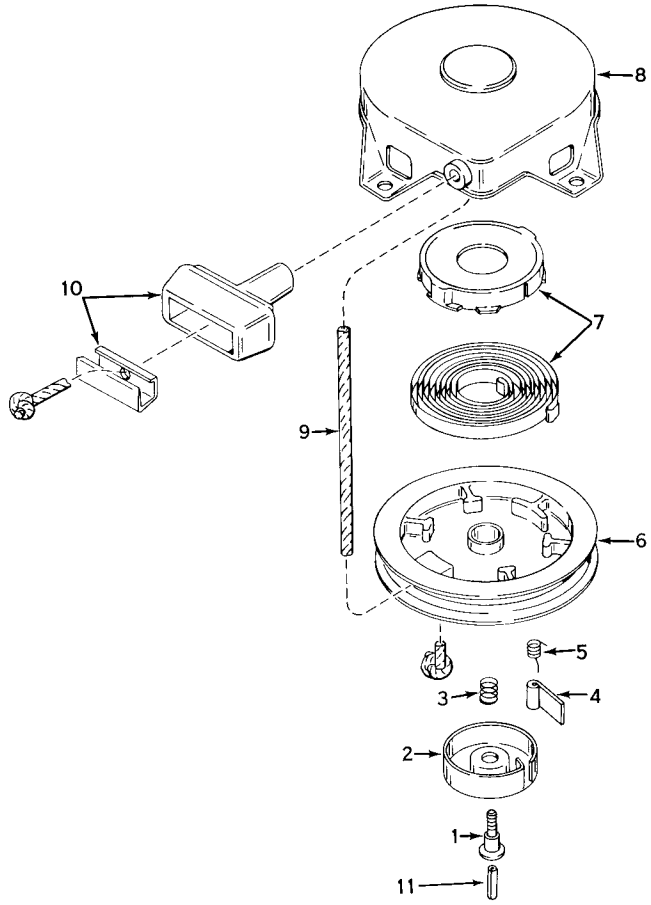

REWIND STARTER NO. 590420

Ref. No.	Part No.	Description	No. Used
1	590409	Screw, Retainer	1
2	590410	Retainer, R.H.	1
3	590411	Spring, Brake	1
4	590148	Dog, Starter	1
5	590412	Spring, R.H Dog	1
6	590413A	Pulley	1

Ref. No.	Part No.	Description	No. Used
7	590414	Spring & Keeper Assy.	1
8	590415	Housing Assy., Starter	1
9	590386	Rope, Starter	1
10	590387	Handle Assy., Starter	1
11	590459	Pin, Centering	1

ENGINE TECUMSEH MODEL NO. V60-70287H

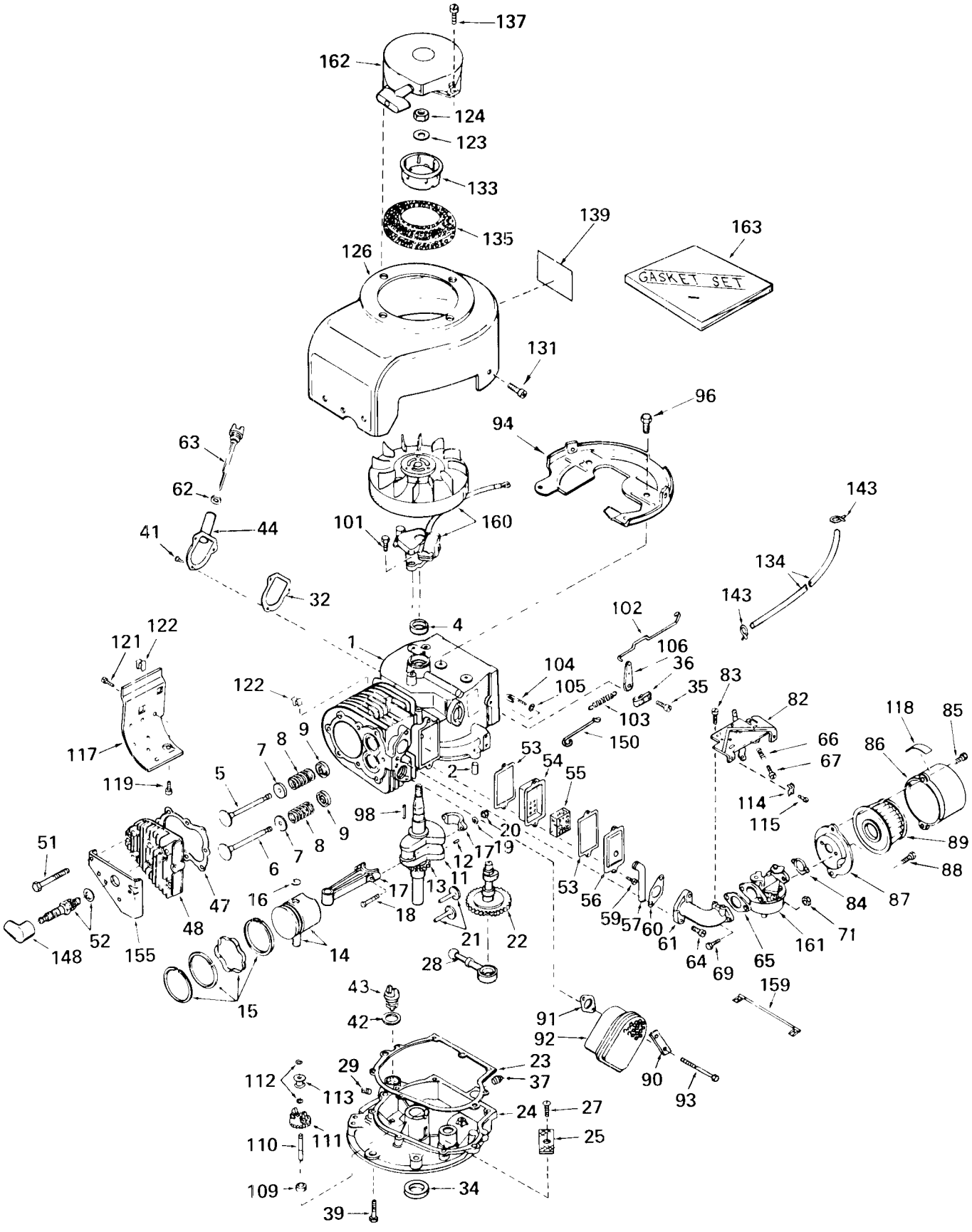

ENGINE TECUMSEH MODEL NO. V60-70287H

Ref. No.	Part No.	Description	No. Used
1	33361	Cylinder Assembly (Incl. Nos. 2, 4, 29, 32 & 41)	1
2	27652	Pin, Dowel	2
4	27876B	Seal, Oil	1
5	31467A	Valve, Intake (Std.) (Incl. No. 9)	1
5	27880A	Valve, Intake (1/32" oversize) (Incl. No. 9)	1
6	31469A	Valve, Exhaust (Std.) (Incl. No.9)	1
6	31470A	Valve, Exhaust (1/32" oversize) (Incl. No. 9)	1
7	27882	Cap, Upper Valve Spring	2
8	27881	Spring, Valve	2
9	32581	Cap, Lower Valve Spring (Std.)	2
11	30896B	Crankshaft Assy. (Incl. Nos. 12 & 13)	1
12	29783	Pin, Crankshaft gear	1
13	27884	Gear, Crankshaft	1
14	33312	Piston & Pin Assembly (Incl. 2 of No. 16) (Std.)	1
14	33313	Piston & Pin Assembly (.010 oversize) (Incl. 2 of No. 16)	1
14	33314	Piston & Pin Assembly (.020 oversize) (Incl. 2 of No. 16)	1
15	33315	Ring Set, Piston (Std.)	1
15	33316	Ring Set, Piston (.010 oversize)	1
15	33317	Ring Set, Piston (.020 oversize)	1
16	27888	Ring, Piston Pin Retaining	2
17	31380B	Rod Assy., Connecting (Incl. Nos. 18, 19 & 20)	1
18	30682	Bolt, Connecting Rod	2
19	26073	Washer, Connecting Rod Bolt	2
20	28264	Nut, Hex	2
21	27893	Lifter, Valve	2
22	32114	Camshaft, (Mech. Comp. Release)	1
23	*30684	Gasket, Mounting Flange	1
24	31552C	Flange Assy., Mounting (Incl. Nos. 25,27,34,37,43,62&110)	1
25	31355	Screen, Oil Filter	1
27	29117	Screw, Slotted Hex Hd. thr'd cutting	1
28	31356	Pump Assembly, Oil	1
29	28582	Plug, Pipe	1
32	*28747	Gasket, Filler Tube	1
34	27897	Seal, Oil	1
35	650548	Screw, Hex Slotted Washer Hd.	1
36	31335	Clamp, Governor Lever	1
37	27642	Plug, Oil Drain, Sq. Hd.	1
39	650488	Screw, Hex Hd. Sems	7
41	28749	Screw, Rd. Hd. Sems	3
42	*29673	Gasket, Oil Filler	1
43	27625	Plug, Oil Filler (Incl. No. 42)	1
44	29759	Tube, Oil Filler	1
47	*28938B	Gasket, Cylinder Head	1
48	30938A	Head, Cylinder	1
51	650697	Screw, Hex Hd. Cap	8
52	33636	Plug, Spark (Champion J-8 or equivalent)	1
53	*27896	Gasket, Valve Chamber Cover	2
54	28423	Body Assembly, Breather	1
55	28424	Element, Breather	1
56	28425	Cover, Valve Chamber	1
57	27627	Tube, Breather	1
59	650128	Screw, Fil. Slotted Hd. Sems	2
60	*27915	Gasket, Intake Pipe	1
61	31358	Pipe, Intake	1
62	*29673	Gasket, Dipstick	1
63	29760	Dipstick, Oil (Incl. No. 62)	1

Ref. No.	Part No.	Description	No. Used
64	650378	Screw, Fil. Hd. Sems	2
65	*26756	Gasket, Carburetor	1
66	31342	Spring, Compression	1
67	650549	Screw, Fil Slotted Hd. Mach.	1
69	6201	Screw, Hex Hd. Cap	2
71	29752	Nut, Hex, Lock	2
82	32181	Control Assembly, Speed (Incl. Nos. 66 & 67)	1
83	30200	Screw, Hex Hd. Self-Tapping Sems	2
84	*27272	Gasket, Air Cleaner	1
85	650152	Screw, Fil. Slotted Hd. Sems	2
86	31692	Body, Air Cleaner	1
87	31691	Bracket, Air Cleaner	1
88	28820	Screw, Phil. Fil. Hd. Mach. Sems	2
89	30727	Element, Air Cleaner	1
90	31588	Plate, Locking	1
91	*27930	Gasket, Muffler	1
92	28269	Muffler	1
93	650696	Screw, Hex Hd. Cap	2
94	29536	Baffle, Blower Housing	1
96	650561	Screw, Phil. Hex Hd. Sems	2
98	30884	Key, Flywheel	1
101	650489	Screw, Hex Hd. Sems, w/flatwasher	2
102	31823	Link, Throttle	1
103	31361	Spring, Governor	1
104	30669	Rod, Governor (Incl. No. 105)	1
105	28277	Washer, Flat	1
106	31357	Lever, Governor	1
109	31707	Spacer	1
110	30668	Shaft, Mechanical Governor	1
111	30591	Gear Assy., Governor	1
112	29193	Ring, Retaining	2
113	30588A	Spool, Governor	1
114	27793	Clip, Conduit	1
115	28942	Screw, Hex Hd. Slotted Sems	1
117	30622	Extension, Blower Housing	1
118	31752	Decal, Air Cleaner	1
119	650128	Screw, Fil. Slotted Hd. Sems	1
121	30688	Screw, Hex Hd. Cap Sems	1
122	27275	Clip, Hi-Tension Wire Retaining	2
123	650490	Washer, Belleville	1
124	8116	Nut, Hex	1
126	32223A	Housing, Blower	1
131	29747A	Screw, Hex Hd. Sems Cap	2
133	32125	Cup, Starter	1
134	30962	Line, Fuel	1
135	590417	Screen, Starter Cup	1
137	29716	Screw, Phil. Pan Hd. Sems	4
139	31865	Decal, Name & Instructions	1
143	26460	Clamp, Fuel Line	2
148	610118	Cover, Spark Plug	1
150	32582	Link, Governor Spring	1
155	30939A	Cover, Cylinder Head	1
159	28468	Wire, Ground	1
160	610689A	Magneto (The complete magneto is not available as an assembly. The magneto number is shown for reference purposes only. Order component parts individually, as shown in parts list.	1
161	631165	Carburetor (Incl. No. 65)	1
162	590420	Starter, Rewind	1
163	33234	Gasket Set (Incl. items marked*)	1

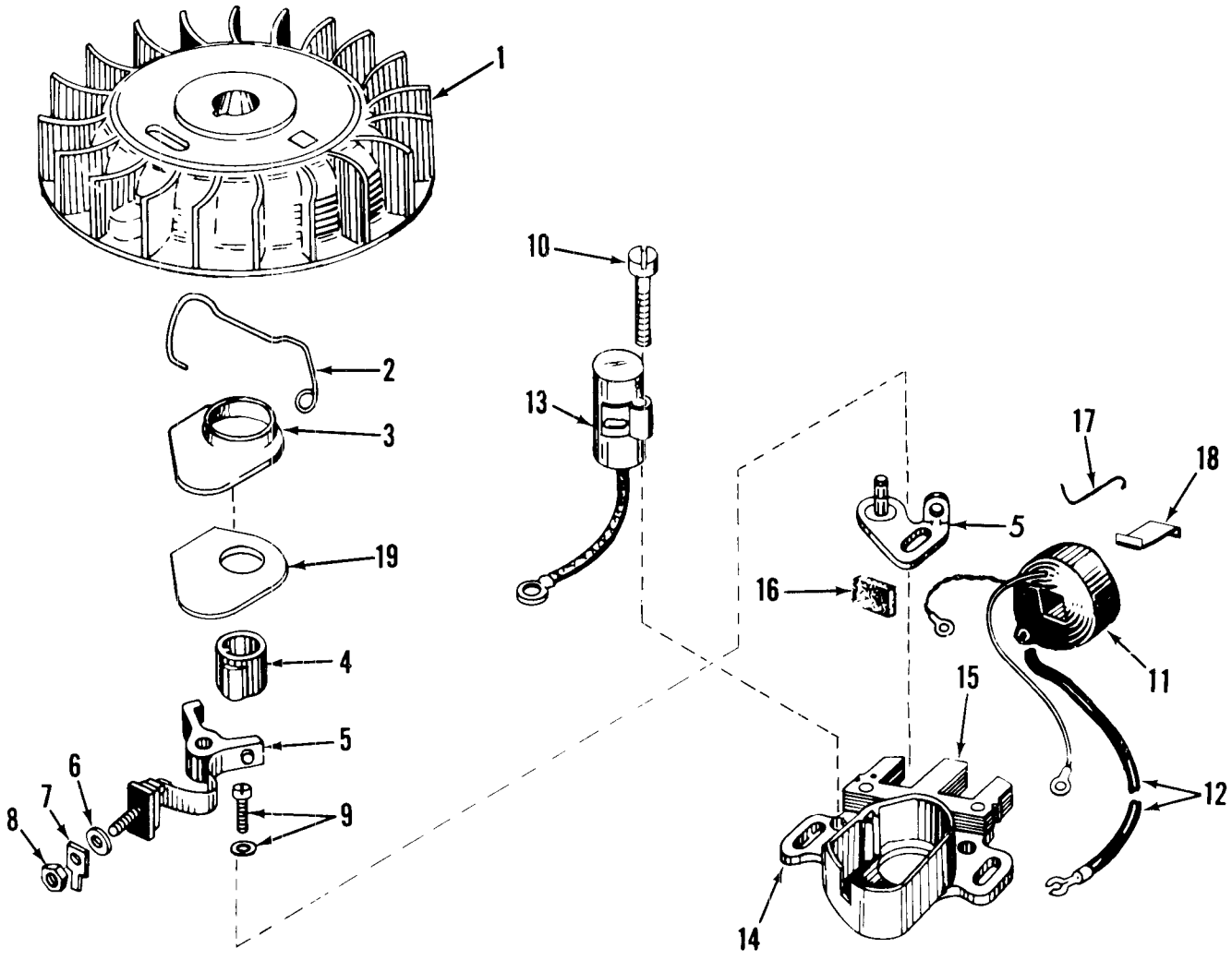

MAGNETO MODEL NO. 610689A

Ref. No.	Part No.	Description	No. Used
1	30555	Flywheel	1
2	30551	Spring, Breaker Box Dust Cover	1
3	30550	Cover, Breaker Box Dust	1
4	30992	Cam, Breaker	1
5	30547A	Contact Assy., Breaker	1
6	610385	Washer, Terminal	1
7	30843	Tab, Ground Terminal	1
8	610408	Nut, Terminal	1
9	29181	Screw & Washer, Breaker	1
10	610593	Screw, Condenser Fastening	1

Ref. No.	Part No.	Description	No. Used
11	30560A	Coil Assy. (Incl. No. 12)	1
12	30554	Wire, Lead	1
13	30548A	Condenser	1
14	30545	Core & Plate	1
15	30561A	Stator Assy. (Incl. Nos. 2, 3, 5 thru 14 & 16 thru 19)	1
16	30549	Felt, Cam Wiper	1
17	31311	Clip, Coil Locking	1
18	29629	Spring, Coil Wedge	1
19	33695	Gasket, Dust Cover	1

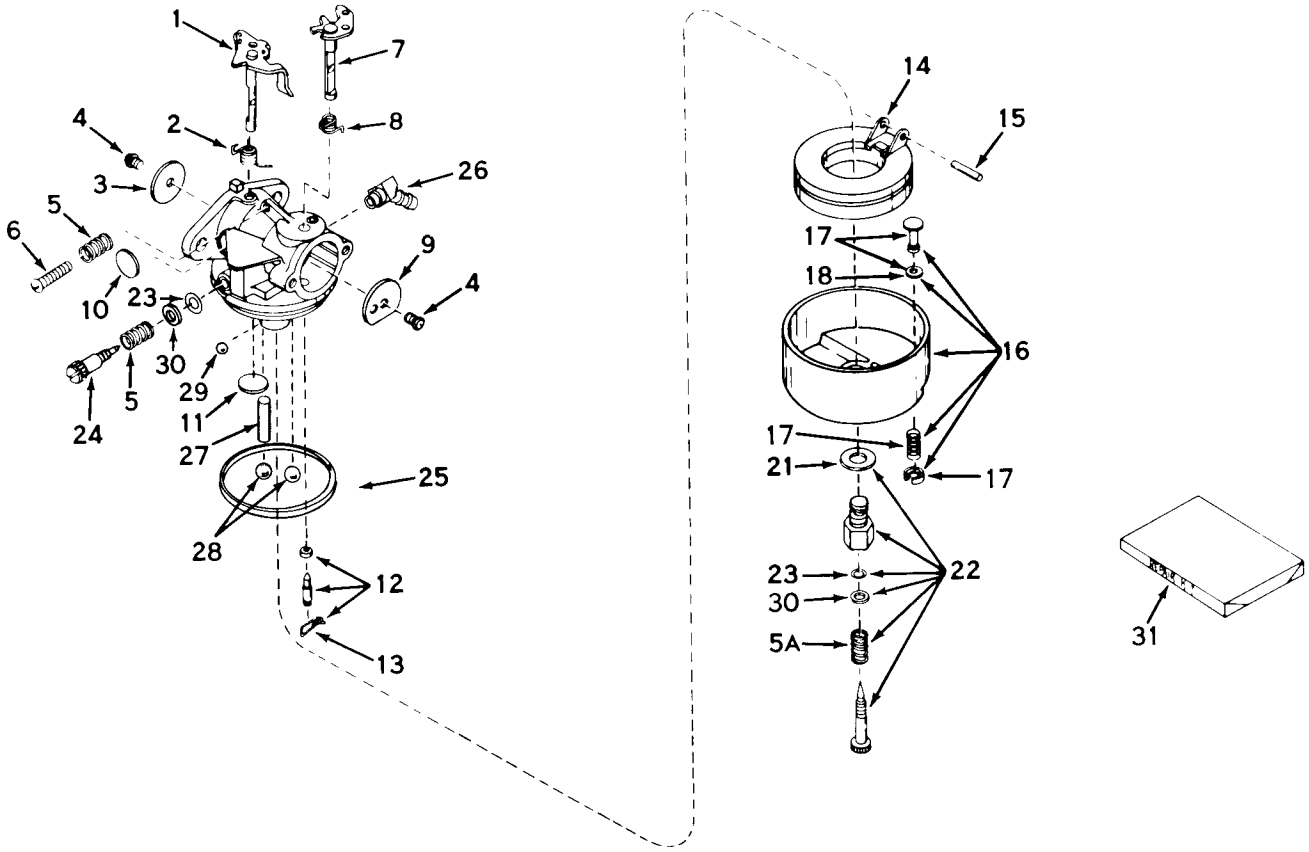

CARBURETOR MODEL NO. 631165

Ref. No.	Part No.	Description	No. Used
1	31834	Shaft & Lever Assy., Throttle	1
2	631279	Spring, Throttle Return	1
3	631036	Shutter, Throttle	1
4	650506	Screw, Rd. Hd.	2
5	630766	Spring, Idle Regulating Screw	2
5A	630738	Spring, Main Adjustment Screw	1
6	650417	Screw, Idle Regulating	1
7	630973	Shaft & Lever Assy., Choke	1
8	630821	Spring, Choke Return	1
9	631037	Shutter, Choke	1
10	*630748	Plug, Welch	1
11	*631027	Plug, Welch	1
12	*631021	Inlet Needle, Seat & Clip Assy. (Incl. No. 13)	1
13	631022	Clip, Inlet Needle	1
14	631023	Float, Carburetor	1
15	*631024	Shaft & Float	1

Ref. No.	Part No.	Description	No. Used
16	631025	Bowl & Drain Assy., Float (Incl. No. 17)	1
17	27136A	Plunger Assy., Drain (Incl. No. 18)	1
18	*27554	Gasket, Drain Plunger	1
21	27110	Gasket, Bowl-to-Body	1
22	*631026	Adjustment Screw Assy., Main (Incl. Nos. 5A, 21, 23 & 30)	1
23	*630740	"O" Ring, Adjustment Screw	2
24	*631078	Screw, Idle Adjustment	1
25	*631028	"O" Ring, Bowl-to Body	1
26	631133	Fitting, Fuel Inlet	1
27	631039	Pin	1
28	630747	Ball, Steel	2
29	631081	Ball, Soft Steel	1
30	630739	Washer	2
31	631029	Repair Kit (Incl. items marked*)	1

PRODUCT CHANGES

In an effort to make improvements available to TORO owners as quickly as possible, minor changes are incorporated into Toro's products from time to time that do not become immediately shown in the Parts Catalog If such a change apparently has been made in your unit, which is not reflected in your manual, see your TORO distributor or his Authorized TORO Service Dealer for information and part numbers

IMPORTANT ORDERING INSTRUCTIONS

Repair parts are available from your Authorized TORO Service Dealer. To insure getting correct parts without delay, furnish the following information

1. Serial number of your unit as shown on the name plate.
2. Part number, description, and quantity of each part required.
3. State whether parts should be shipped by mail or express All repair parts are shipped F O.B. Factory
4. Name and address where parts are to be shipped
5. Do not order by reference number, use part number only

THE TORO PROMISE

It is Toro's policy to design and produce TORO products to provide our customers with a high level of performance and durability in normal operation Our products, however, are produced in high volume, and it is inevitable that occasionally a unit will reach a customer with a defect in materials or workmanship which causes that unit to fall below the normal high level of TORO performance. Invariably, such a defect will be noticed in a residential product within one year, and in an institutional product within ninety days after purchase Recognizing this possibility, Toro has established a simple guarantee policy and procedure that is intended to assure customer satisfaction. This guarantee statement is as follows

The Toro Promise

The Toro Company promises to repair any TORO product for the original purchaser if defective in materials or workmanship The following time periods from the date of purchase apply

Residential products	1 year
Residential products used commercially	45 days
Institutional products	90 days

The costs of parts and labor are included, but the customer pays the transportation costs. Just return any residential product to an Authorized TORO Service Dealer, or any institutional product to a TORO distributor.

Should you feel that a product is defective, and wish to rely on The Toro Promise, the following procedure is recommended

1. Contact any TORO dealer or distributor, but preferably the dealer or distributor from whom you purchased the product.
2. He will instruct you to either return the product to him, or tell you the name and address of your nearest Authorized TORO Service Dealer if the product is to be returned to such dealer
3. Take the product and your original sales slip, or other evidence of purchase date, to the servicing dealer.
4. The servicing dealer will inspect the unit, advise you whether the product is defective and, if so, make all repairs necessary to correct the defect without extra charge to you

If for any reason you are dissatisfied with the dealer's analysis of the defect or the service he performs, we urge you to contact us. Write

TORO "Customer Care" Department
8111 Lyndale Avenue South
Bloomington, Minnesota 55420

Litho in U S A