FORM NO. 3310-621

TORO

MODEL NO. 31763–500001 & UP
MODEL NO. 31823–500001 & UP

PARTS CATALOG

826 & 832 SNOWTHROWERS

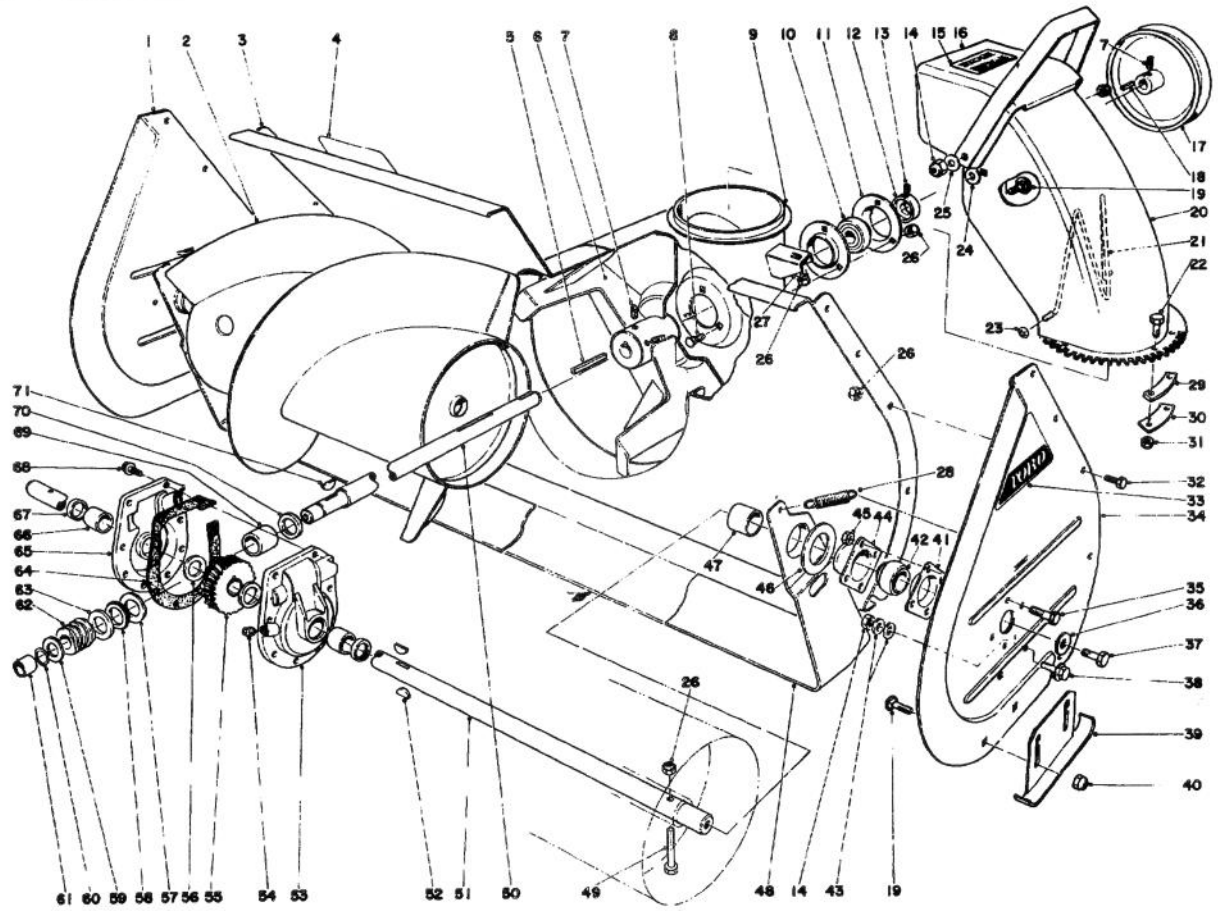

AUGER ASSEMBLY (Model 31763)

Ref. No.	Part No.	Description	No. Used
1	8-8450	Auger Side Plate R.H.	1
2	11-6900	Auger R.H.	1
*	11-6890	Auger L.H.	1
3	5-8579	Auger Housing (Incl. Ref. #4)	1
4	22-8130	Decal	1
5	6-8590	Key	1
6	19-8890	Impeller	1
7	3242-4	Set Screw	4
8	3230-1	Carriage Bolt	3
9	5-7250	Collar Support	1
10	251-224	Bearing	1
11	251-229	Bearing Flange	2
12	251-231	Locking Collar	1

Ref. No.	Part No.	Description	No. Used
13	3245-32	Set Screw	1
14	32152-2	Locknut	4
15	22-8730	Decal – Chute Warning	1
16	5-8589	Deflector (Incl. Ref. #15)	1
17	5-7400	Pulley Impeller	1
18	3-6857	Key	1
19	3231-27	Carriage Bolt	7
20	8-9130	Upper Chute	1
21	12-2040	Wire Chute	1
22	3290-359	Capscrew	6
23	3290-326	Pushnut	2
24	20-4320	Washer Rubber	2
25	3290-340	Washer – Belleville	2

*Not Illustrated

Copyright 1974 by
The Toro Company
Bloomington, Minnesota 55420 U.S.A.

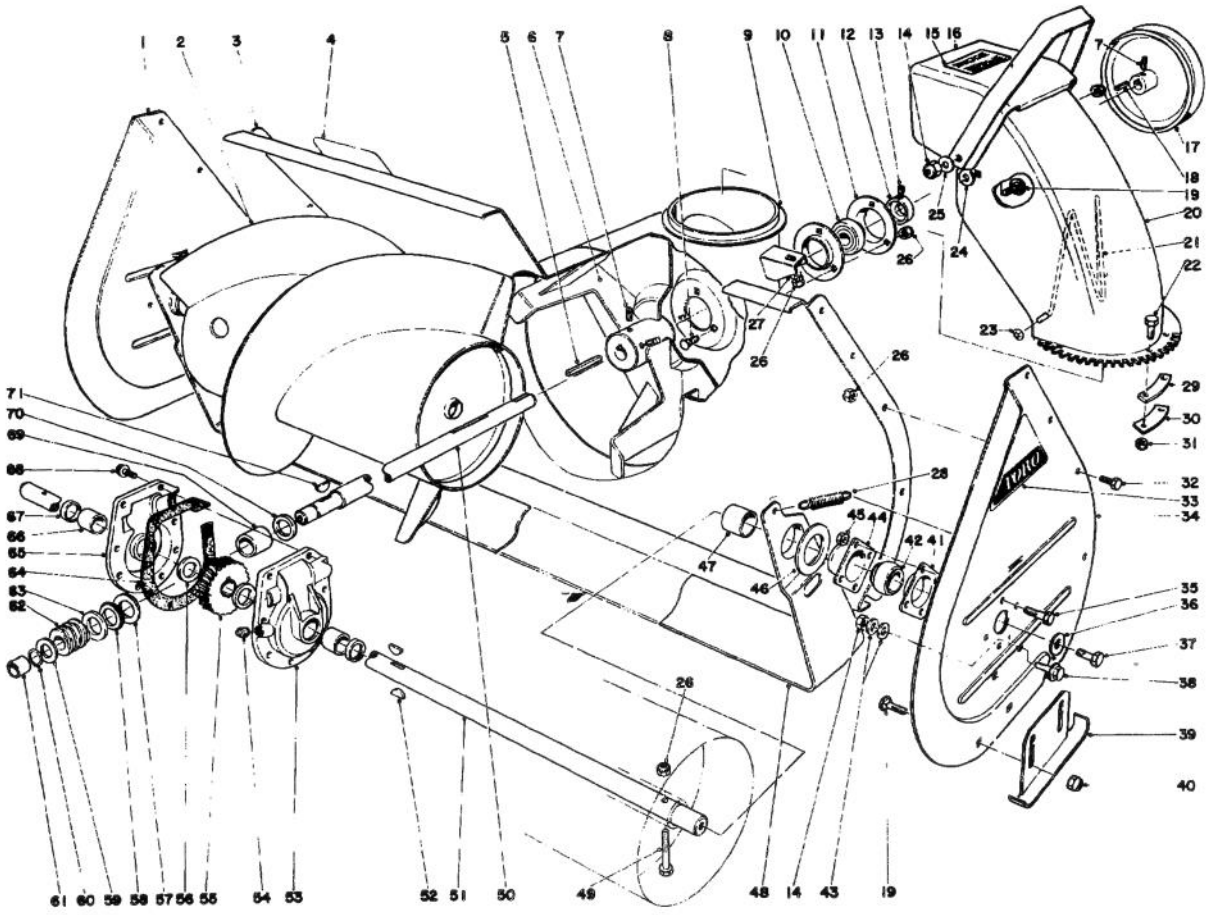

AUGER ASSEMBLY (Model 31763) (Continued)

Ref. No.	Part No.	Description	No. Used
26	32152-1	Locknut	16
27	3290-238	Pyramidal Washer	1
28	5-7290	Spring – Scraper	2
29	6-5570	Tab – Upper Chute	3
30	6-5560	Tab Spacer Chute	3
31	32146-18	Locknut	6
32	322-2	Capscrew	10
33	17-6500	Decal	2
34	8-8440	Auger Side Plate L.H.	1
35	321-3	Capscrew	8
36	3-0750	Flat Washer	2
37	323-6	Capscrew	2
38	3234-1	Capscrew	2
39	8-8460	Skid Auger	2
40	3290-357	Flange Nut	4
41	20-1000	Flange Bearing Rear	2
42	20-0980	Bearing	2
43	3256-4	Washer	4
44	20-0990	Flange Bearing Front	2
45	32152-4	Locknut	8

Ref. No.	Part No.	Description	No. Used
46	20-0300	Spacer – Scraper Blade	2
47	19-9150	Spacer – Auger	2
48	19-9140	Scraper Blade	1
49	17-7030	Auger Bolt	2
50	19-8540	Shaft – Impeller	1
51	11-7000	Auger Shaft	1
52	3257-33	Woodruff Key	2
53	19-6970	Gear Case (Incl. Ref. #66 - 67)	1
54	281-1	Pipe Plug	1
55	5-7180	Worm Gear	1
56	252-71	Thrust Bearing	2
57	252-78	Thrust Washer	1
58	252-76	Thrust Bearing	1
59	3-8664	Thrust Washer	1
60	32120-72	Retaining Ring	1
61	256-32	Bushing	1
62	5-7170	Worm	1
63	252-77	Thrust Washer	1
64	19-8520	Gasket	1
65	19-6980	Gear Case (Incl. Ref. #66 - 67)	1

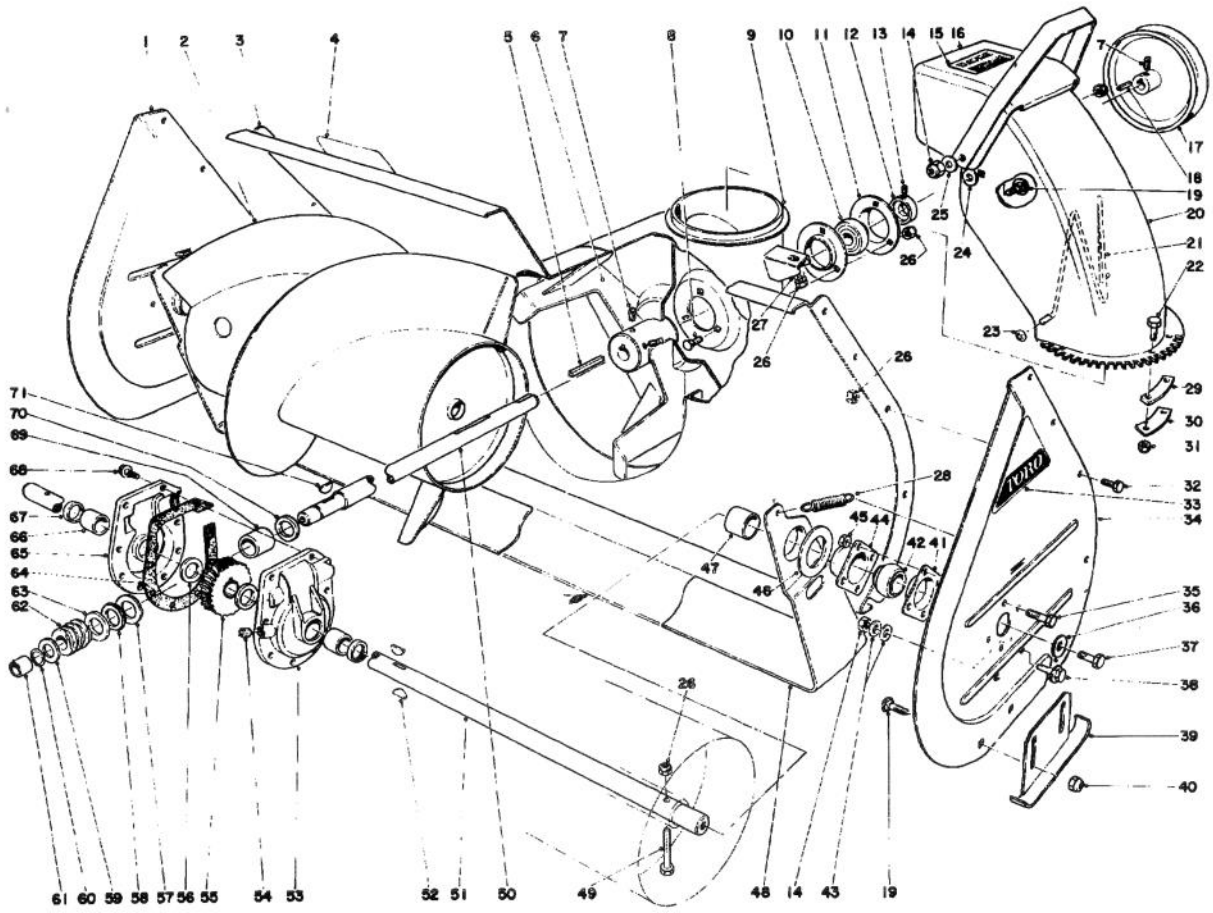

AUGER ASSEMBLY (Model 31763) (Continued)

Ref. No.	Part No.	Description	No. Used
66	256-237	Bushing	2
67	7-0045	Oil Seal	2
68	32144-11	Thread Forming Screw	8
69	20-3210	Bushing	1
70	237-87	Seal	1

Ref. No.	Part No.	Description	No. Used
71	3257-23	Key Woodruff	1
†	20-2850	Heavy Duty Skid Kit	1
†	20-0640	Drift/Storage Bar Kit	1
*	19-6990	Gear Case Assembly Complete	1

*Not Illustrated
†Optional Equipment

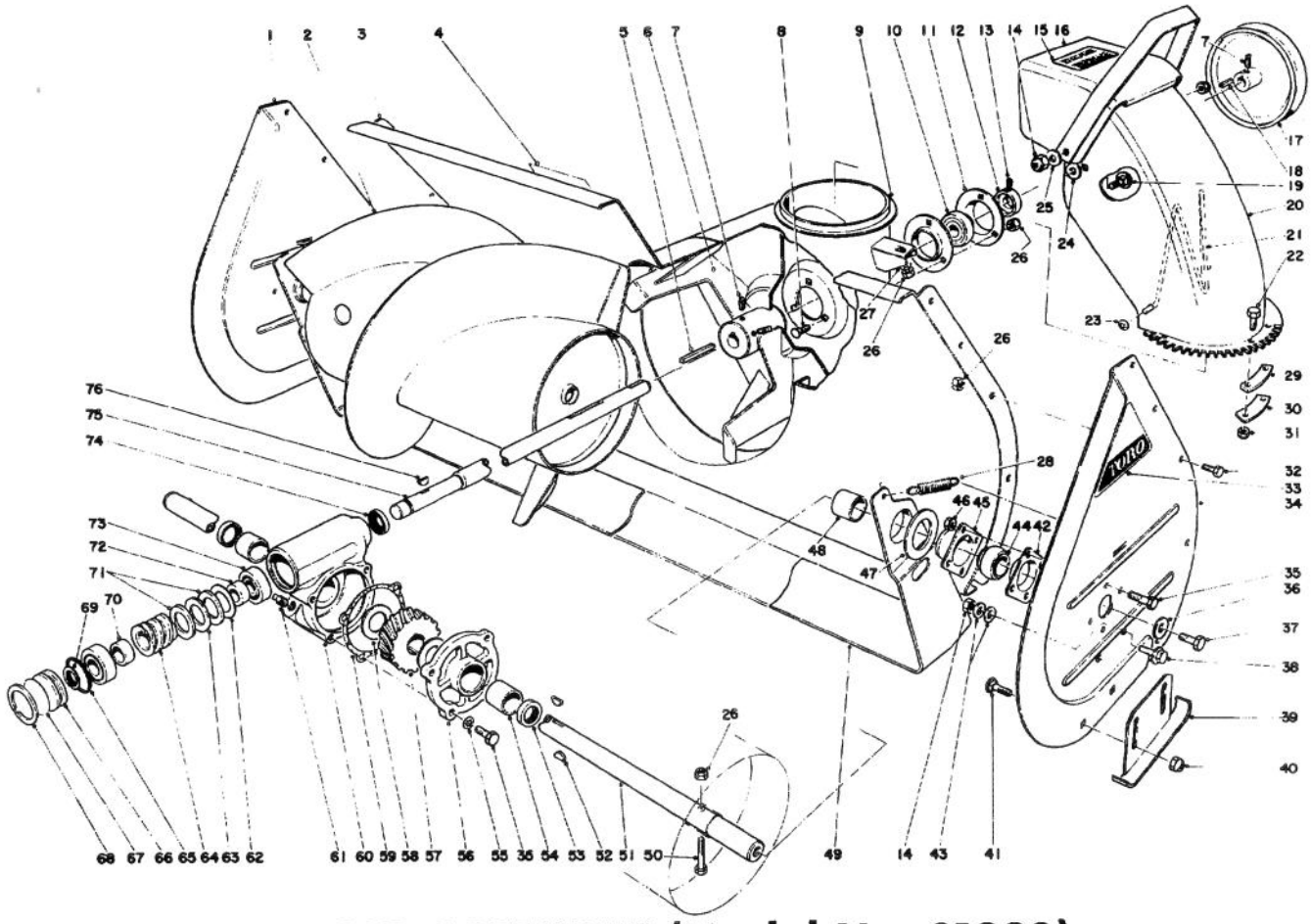

AUGER ASSEMBLY (Model No. 31823)

Ref. No.	Part No.	Description	No. Used
1	8-8450	Auger Side Plate (R.H.)	1
2	11-6920	Auger R.H.	1
*	11-6910	Auger L.H.	1
3	5-8709	Auger Housing (Incl. Ref. #4)	1
4	22-8130	Decal Warning	1
5	6-8590	Key	1
6	19-8890	Impeller	1
7	3242-4	Set Screw	4
8	3230-1	Carriage Bolt	3
9	5-7250	Collar Support	1
10	251-224	Bearing	1
11	251-229	Bearing Flange	2
12	251-231	Locking Collar	1
13	3245-32	Set Screw	2
14	32152-2	Locknut	4
15	22-8730	Decal Chute Warning	1
16	5-8589	Deflector (Incl. Ref. #15)	1
17	5-7400	Impeller Pulley	1
18	3-6857	Key	1
19	3231-27	Carriage Bolt	2
20	8-9130	Upper Chute	1
21	12-2040	Chute Wire	1
22	3290-359	Capscrew	6

Ref. No.	Part No.	Description	No. Used
23	3290-326	Push Nut	2
24	20-4320	Rubber Washer	2
25	3290-340	Washer – Belleville	2
26	32152-1	Locknut	16
27	3290-238	Pyramidal Washer	1
28	5-7290	Scraper Spring	2
29	6-5570	Upper Chute Tab	3
30	6-5560	Chute Spacer	3
31	32146-18	Locknut	6
32	322-2	Capscrew	10
33	17-6500	Decal	2
34	8-8440	Auger Side Plate (L.H.)	1
35	321-3	Capscrew	12
36	3-0750	Flatwasher	2
37	323-6	Capscrew	2
38	3234-1	Capscrew	2
39	8-8460	Auger Skid	2
40	3290-357	Flange Nut	4
41	3231-27	Carriage Bolt	4
42	20-1000	Rear Bearing Flange	2
43	3256-4	Washer	4
44	20-0980	Bearing	2
45	20-0990	Front Bearing Flange	2

*Not Illustrated

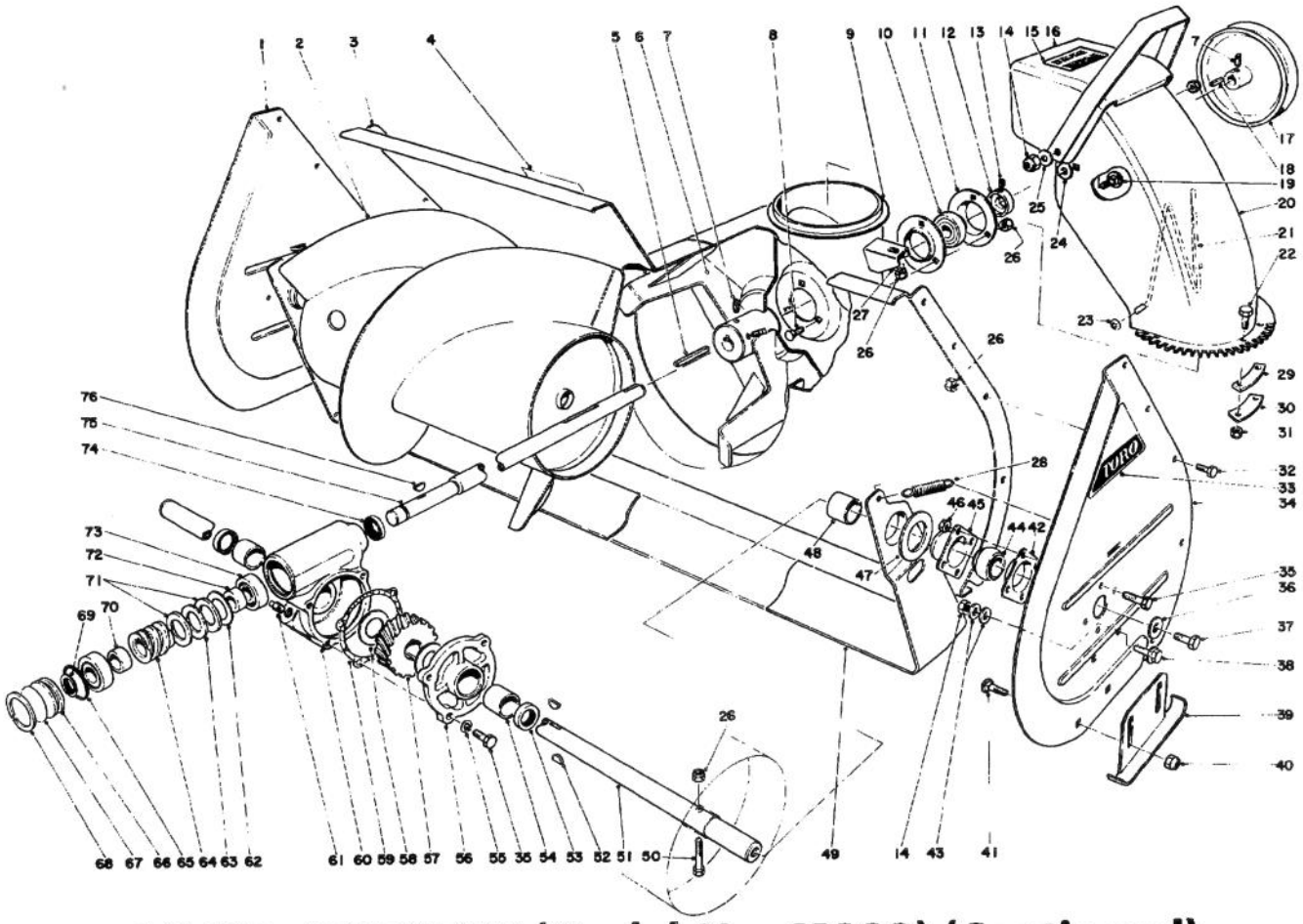

AUGER ASSEMBLY (Model No. 31823) (Continued)

Ref. No.	Part No.	Description	No. Used
46	32152-4	Locknut	8
47	20-0300	Spacer	2
48	19-9150	Spacer	2
49	19-9160	Scraper Blade	1
50	17-7030	Auger Bolt	2
51	11-7010	Auger Shaft	1
52	3257-33	Woodruff Key	2
53	7-0045	Oil Seal	2
54	256-237	Bushing	2
55	3254-8	Internal Tooth Lockwasher	4
56	5-7120	Gear Box Cover (Incl. Ref. # 53 & 54)	1
57	5-7180	Worm Gear	1
58	252-71	Thrust Bearing	2
59	5-7110	Gasket	2
60	23-7930	Gear Box (Incl. Ref. # 53-54 & 72)	1
61	281-1	Pipe Plug	1

Ref. No.	Part No.	Description	No. Used
62	252-85	Thrust Race	1
63	252-84	Thrust Bearing	1
64	5-7170	Worm	1
65	237-71	O-Ring	1
66	7-0017	Plug	1
67	11-2120	Shim	1
68	7-0018	Snap Ring	1
69	32120-72	Snap Ring	1
70	8-9000	Spacer	1
71	252-86	Thrust Race	2
72	23-9090	Spacer	1
73	251-207	Bearing	2
74	253-59	Oil Seal	1
75	23-7950	Worm Shaft	1
76	3257-23	Hi-Pro Key	1
*	23-7920	Gear Case Assembly Complete	1
†	20-2850	Heavy Duty Skid Kit	1
†	20-0650	Drift Breaker Kit Optional	1

*Not Illustrated
†Optional Equipment

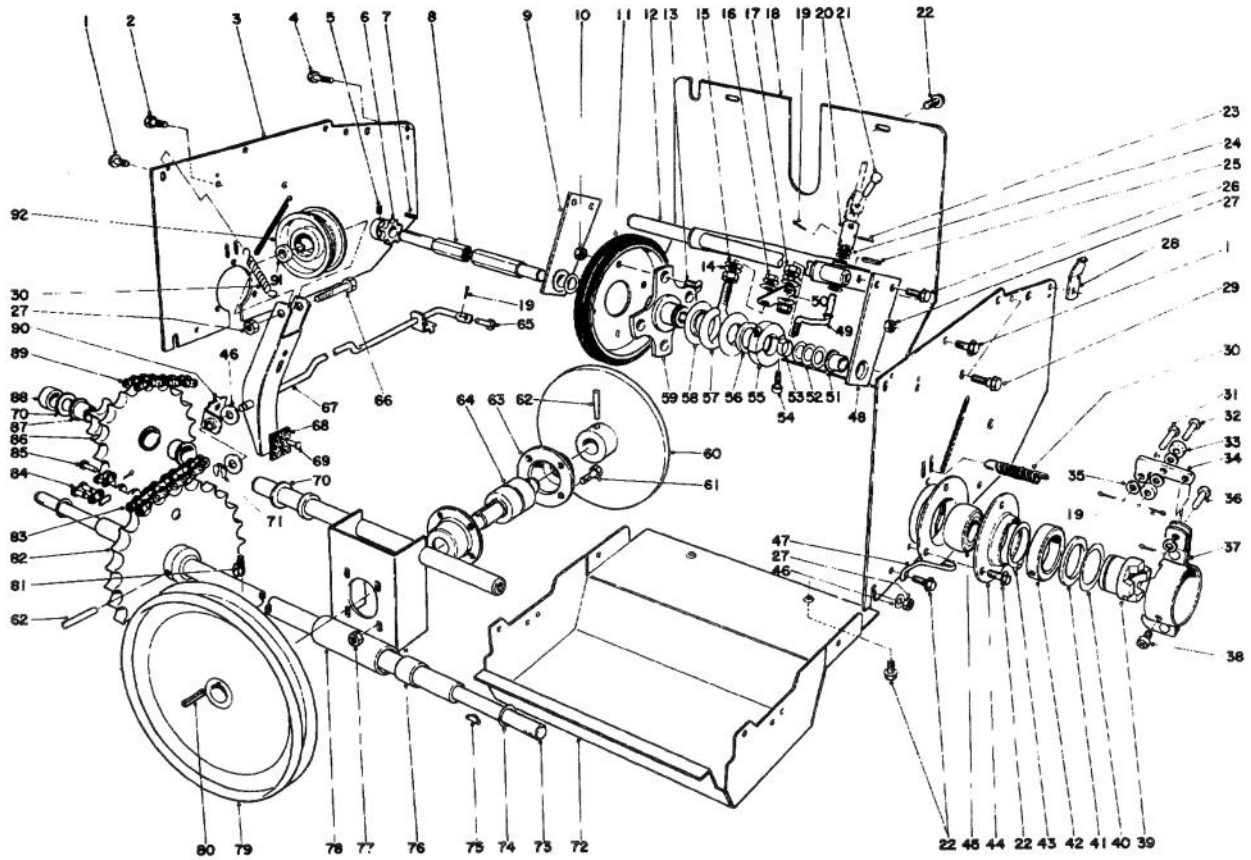

TRACTION ASSEMBLY

Ref. No.	Part No.	Description	No. Used
1	3234-1	Hex Hd. Capscrew	6
2	32104-98	Hex Hd. Self Tapping Screw	1
3	22-7990	Side Plate – Drive	2
4	32104-6	Hex. Hd. Self Tapping Screw	1
5	3245-32	Set Screw	2
6	5-9820	Sprocket	1
7	3-6168	Square Key	1
8	11-8940	Shaft- Friction Wheel	1
9	11-8040	Hex Shaft Mount Right (Incl. Ref. # 51)	1
10	32146-5	Locknut	4
11	3-5461	Disc	1
12	11-8010	Bracket – Dead Shaft	1
13	32108-94	Screw Flat Head	4
14	3256-45	Washer	2
15	3290-301	Spring Washer	4
16	32128-12	Flange Nut	2
17	32146-12	Locknut	2
18	8-7950	Rear Shield	1
19	3272-5	Cotter Pin	8
20	11-8070	Tube U Joint	1
21	283-31	Clevis Pin	1
22	32144-10	Hex. Hd. Thread Forming Screw	14
23	32121-50	Roll Pin	2
24	3-6712	Spacer	3
25	32121-11	Roll Pin	2
26	32144-11	Screw Thread Forming	4
27	32146-2	Locknut	10

Ref. No.	Part No.	Description	No. Used
28	22-8000	Bracket Handle Mounting	2
29	11-8140	Shoulder Screw	4
30	10-3890	Spring Extension	3
31	283-29	Clevis Pin	2
32	283-17	Clevis Pin	2
33	10-3910	Roller Clutch	4
34	20-1050	Arm – Clutch Cam	2
35	3256-21	Washer	10
36	283-16	Clevis Pin	2
37	20-2290	Clutch Mount Bracket	2
38	3274-42	Hex. Socket Capscrew	4
39	20-2870	Wheel Clutch	2
40	10-3980	Thrust Washer	2
41	256-214	Thrust Bearing	2
42	10-3860	Collar – Clutch Mount	2
43	32151-35	Retaining Ring	2
44	20-1020	Flange – Axle Bearing	4
45	20-1010	Axle Bearing	2
46	3256-25	Washer	4
47	11-0610	Retainer Clutch	2
48	11-8030	Hex Shaft Mount Left (Incl. Ref. # 51)	1
49	11-8090	Connecting Rod	1
50	11-8060	Pivot – Shift Rod	1
51	256-219	Bushing	2
52	5-7570	Washer	4
53	11-3180	Split Spacer	1
54	3274-26	Hex Socket Cap Screw	2

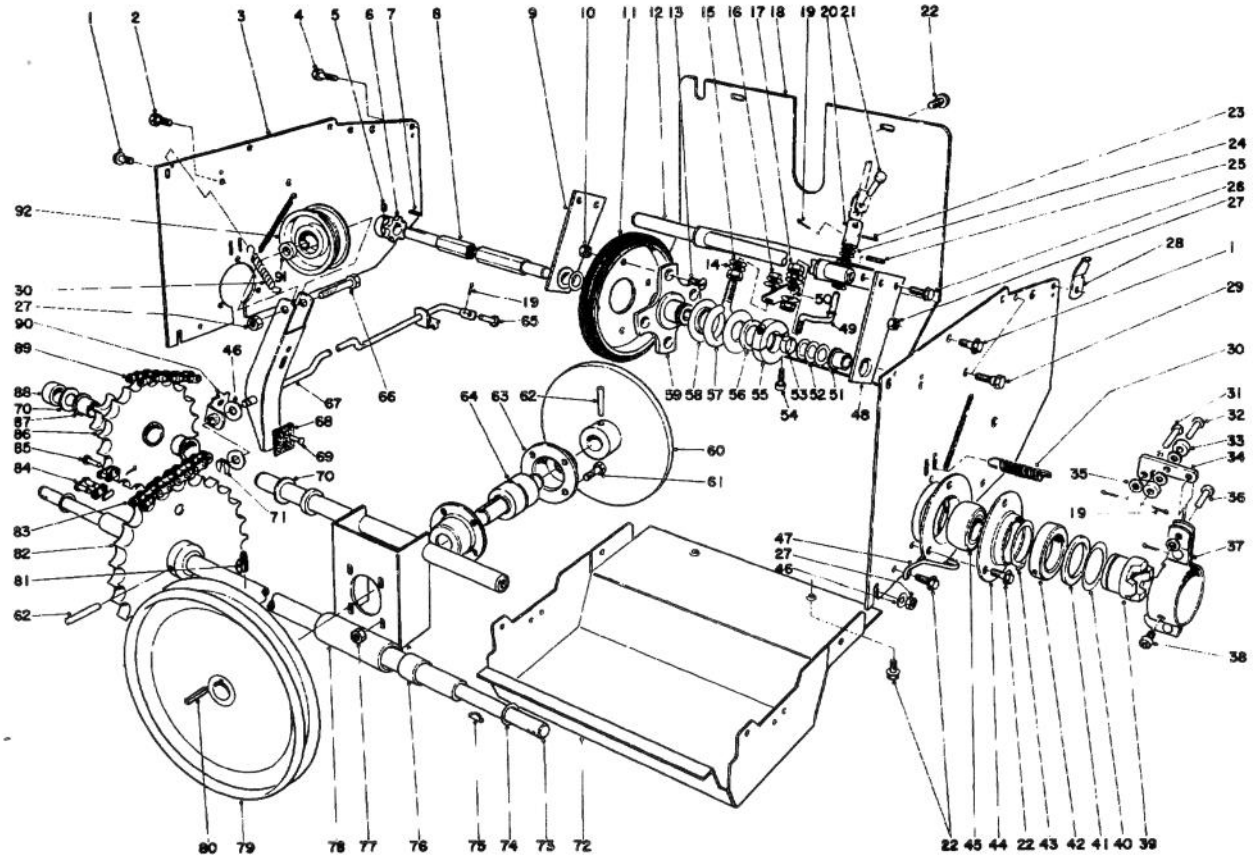

TRACTION ASSEMBLY (Continued)

Ref. No.	Part No.	Description	No. Used
55	20-4610	Collar	1
56	252-71	Thrust Bearing	1
57	11-8050	Slider Ring Collar	1
58	11-8080	Slider Ring	2
59	20-3310	Hub – Traction Disc	1
60	11-7940	Friction Plate	1
61	322-3	Capscrew	4
62	3285-11	Groove Pin	2
63	10-0070	Bearing Housing	2
64	8-8680	Shaft – Friction Plate	1
65	283-1	Clevis Pin	1
66	323-8	Capscrew	1
67	5-9979	Auger Idler & Brake (Incl. Ref. # 68 & 69)	1
68	20-3100	Brake Pad	1
69	3295-23	Rivet	2
70	3-6498	Thrust Washer	2
71	32151-43	Klip Ring	1
72	11-7140	Lower Shield	1
73	8-8760	Axle Shaft	1

Ref. No.	Part No.	Description	No. Used
74	3-0737	Thrust Washer	2
75	3257-19	Key	2
76	256-232	Bushing	2
77	32149-1	Locknut	4
78	17-2080	Bulkhead	1
79	5-7410	Pulley Drive	1
80	3-6168	Key	1
81	3242-4	Set Screw	2
82	8-8770	Sprocket	1
83	8-8810	Lower Chain	1
84	2710-6	Connecting Link	2
85	2710-10	Half Link	2
86	5-7070	Sprocket (Incl. Ref. # 87)	1
87	256-215	Bushing	2
88	20-4580	Spacer	1
89	5-9430	Drive Chain	1
90	20-2940	Bracket Clutch Rod	1
91	20-0010	Spacer	1
92	3-4244	Idler Pulley	1

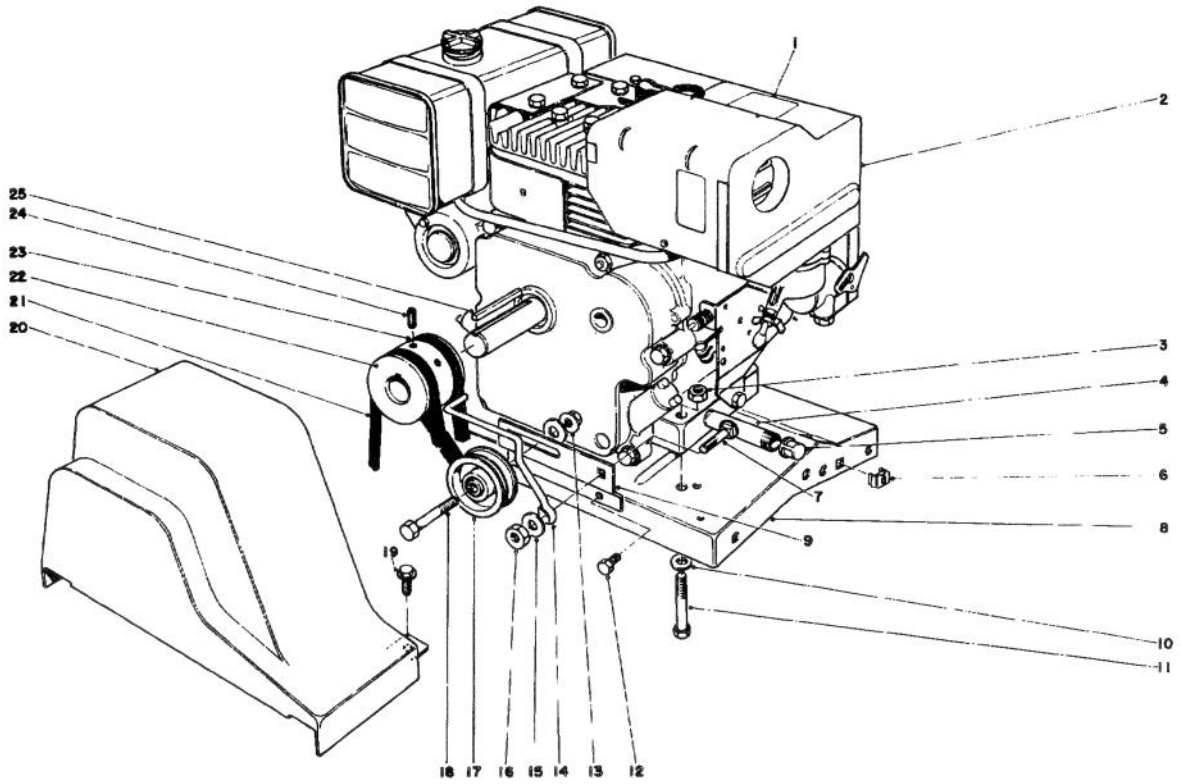

ENGINE ASSEMBLY

Ref. No.	Part No.	Description	No. Used
1	22-9990	Decal Instruction	1
2	221-444	Engine	1
3	32152-1	Locknut	4
4	289-20	Pipe Nipple	1
5	288-4	Pipe Cap	1
6	3290-370	Retainer Nut	2
7	3231-27	Carriage Bolt	1
8	22-8020	Engine Base	1
9	22-7960	Belt Idler Bracket	1
10	3256-23	Washer	4
11	322-9	Capscrew	4
12	32104-6	Hex Hd. Self Tapping Screw	2
13	3290-357	Locknut	1
14	8-8830	Belt Guide	1
15	3256-25	Washer	2
16	32146-2	Locknut	1
17	3-4244	Idler Pulley	1
18	323-8	Capscrew	1
19	32144-10	Screw Thread Forming	2
20	17-6550	Belt Guard	1
21	17-0850	V-Belt	1
22	11-9110	Engine Pulley	1
23	17-6540	V-Belt	1
24	3246-14	Set Screw	2
25	5-0930	Key	1
†	20-7200	Starter Motor Kit U.S.	1
†	23-4420	Starter Motor Kit Canada	1

†Optional Equipment

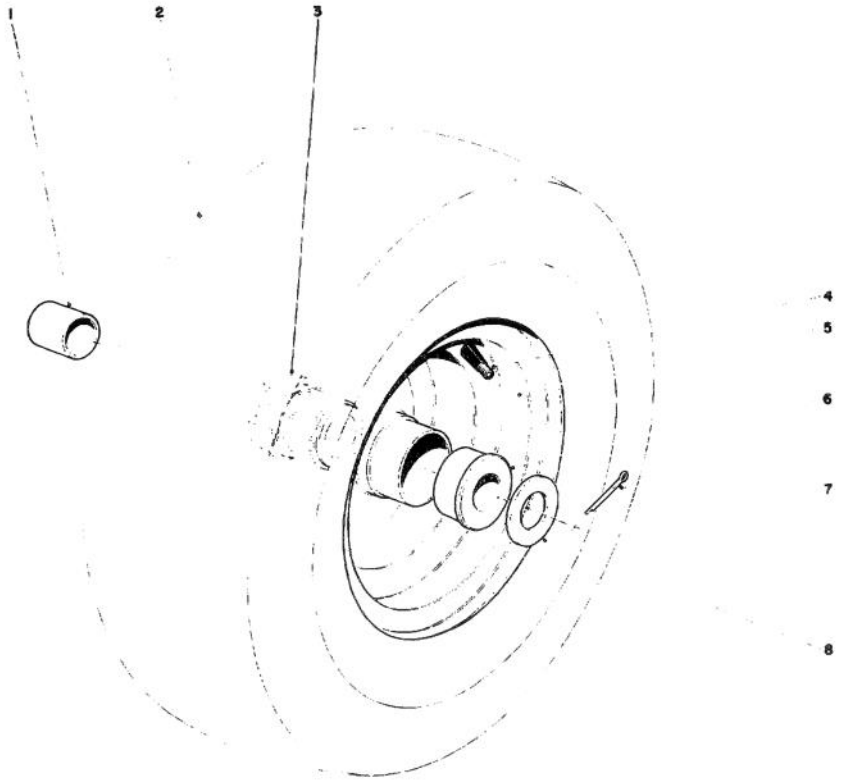

WHEEL ASSEMBLY

Ref. No.	Part No.	Description	No. Used
1	256-205	Bushing	2
2	231-78	Tire (Model #31763)	2
*	231-61	Tire (Model #31823)	2
3	12-1130	Hub Jaw	2
4	232-27	Valve Stem	2
5	17-6610	Wheel Rim (Model #31763)	2
*	12-1670	Wheel Rim (Model #31823) (Incl. Ref. # 3)	2

Ref. No.	Part No.	Description	No. Used
6	256-212	Bushing	2
7	3272-17	Cotter Pin	2
8	3-8664	Thrust Washer	2
†	17-7620	Tire Chains (Model #31763 only)	1 set
†	22-8080	Tire Chains (Model #31823 only)	1 set

*Not Illustrated
†Optional Equipment

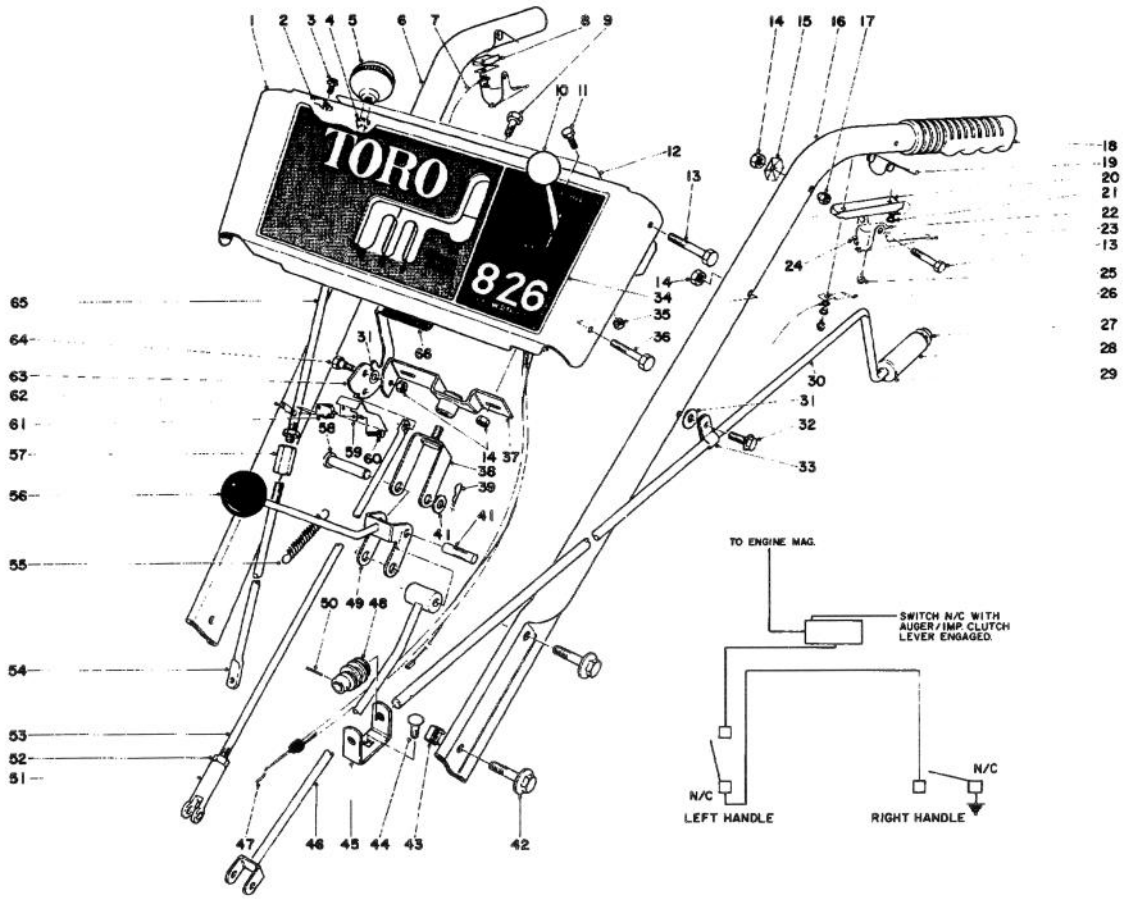

HANDLE ASSEMBLY

Ref. No.	Part No.	Description	No. Used
1	6-1859	Escutcheon Plate (Incl. Ref. # 12 & 34) (Model # 31763 only)	1
*	6-1869	Escutcheon Plate (Incl. Ref. # 12 & 34) (Model # 31823 only)	1
2	20-2810	Clip	2
3	32104-76	Self Tapping Screw	2
4	256-240	Bushing – Nylines	2
5	233-10	Knob	2
6	20-1040	Handle Right	1
7	20-2120	Wire Harness	1
8	17-5680	Insulator – Safety Interlock	1
9	321-3	Capscrew	2
10	233-25	Knob Throttle Control	1
11	32140-99	Hex Hd. Sems	2
12	11-8390	Decal Escutcheon Back	1
13	321-11	Capscrew	4
14	32152-4	Locknut	8
15	3290-257	Pyramidal Washer	2
16	20-1030	Handle Left	1
17	32111-7	Acorn Nut	2
18	6-0450	Handle Grip	2

Ref. No.	Part No.	Description	No. Used
19	17-5720	Spring Safety Interlock	2
20	20-2110	Insulator – Interlock	1
21	17-5700	Insulator Washer	3
22	17-5690	Contact – Safety Interlock	2
23	17-5710	Lever Safety Interlock	2
24	3290-358	Rivet – Plastic	1
25	32104-75	Screw Self Tapping	3
26	17-6510	Bracket Contact	1
27	3290-320	Push-On Speed Nut	1
28	20-2060	Chute Control Grip	1
29	3256-24	Washer	1
30	8-8570	Rod Chute Control	1
31	3256-23	Washer	3
32	32144-11	Hex Hd. Thread Forming Screw	1
33	2412-10	Clip	1
34	22-8180	Decal – Escutcheon (Model # 31763)	1
*	22-8190	Decal – Escutcheon (Model # 31823)	1
35	32146-18	Locknut	2
36	321-9	Capscrew	2
37	8-7930	Swivel Block	1
38	8-7910	Pivot Bracket	1

*Not Illustrated

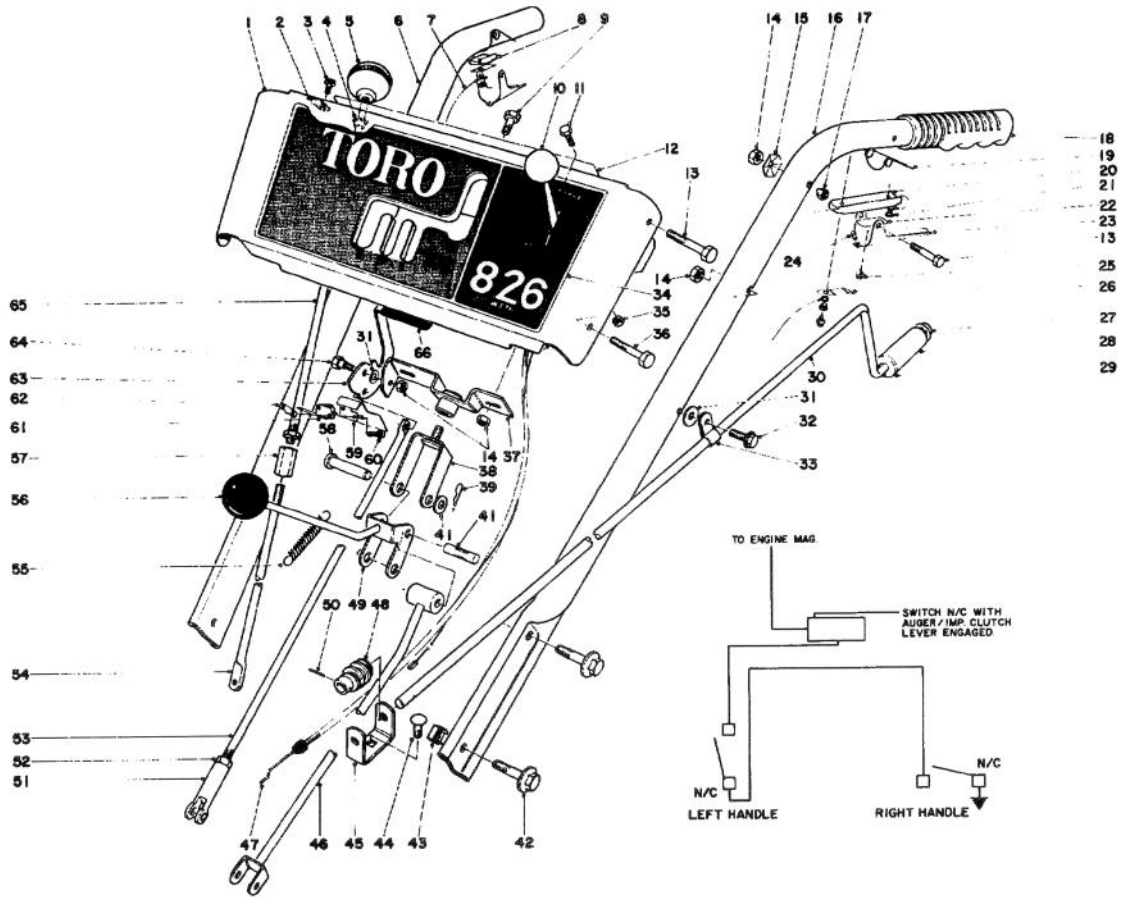

HANDLE ASSEMBLY (Continued)

Ref. No.	Part No.	Description	No. Used
39	3290-322	Hair Pin Cotter	1
40	3256-6	Washer	1
41	3284-2	Groove Pin	1
42	3234-1	Hex Flange Screw	4
43	3290-370	Retainer Nut	2
44	3230-15	Carriage Bolt	1
45	11-7110	Bracket – Worm	1
46	11-8100	Trunnion	1
47	8-7790	Throttle Control	1
48	8-8600	Worm Gear	1
49	20-3050	Shift Rod	1
50	32121-50	Roll Pin	1
51	5-0865	Clevis	1
52	3220-3	Jam Nut	3
53	20-2310	Drag Link	1

Ref. No.	Part No.	Description	No. Used
54	22-7970	Rod Wheel Clutch Lower	2
55	8-9900	Spring – Control Rod	1
56	233-21	Knob	1
57	22-7940	Coupling – Wheel Clutch Rod	2
58	283-5	Clevis Pin	1
59	22-9300	Bracket Switch	1
60	3290-313	Pan Hd. Machine Screw	2
61	12-3320	Micro Switch	1
62	3290-354	Speed Nut	1
63	17-6620	Handle – Auger Clutch	1
64	11-9030	Shoulder Bolt	2
65	22-7980	Rod – Wheel Clutch Upper	2
66	11-8970	Grip – Auger Clutch Handle	1
†	12-8100	Snow Cab Assembly	1
*	5-9959	Loose Parts Kit	1

*Not Illustrated
†Optional Equipment

ENGINE MODEL NO. 190402 TYPE 0755-01
BRIGGS & STRATTON

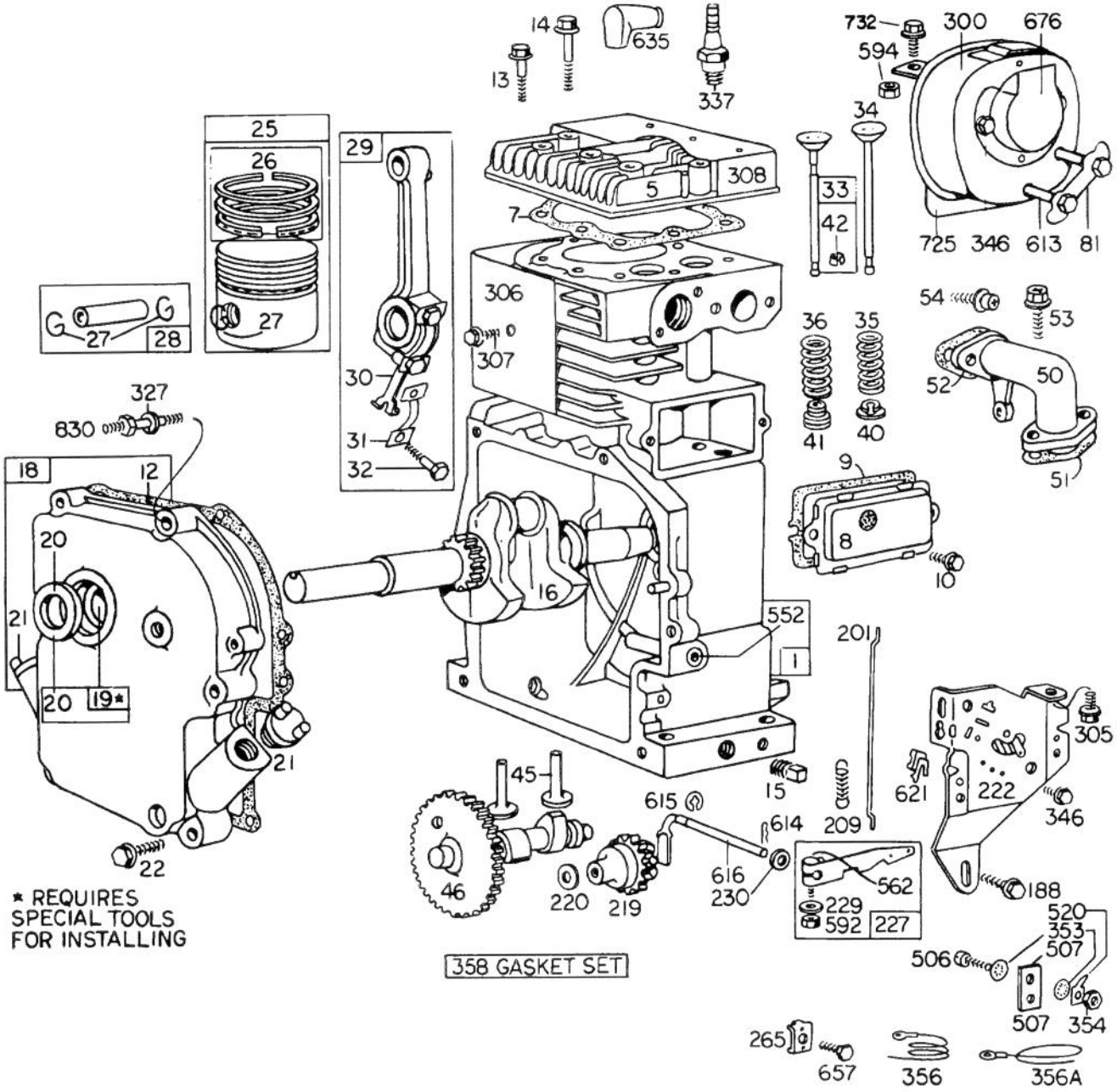

ENGINE MODEL NO. 190402 TYPE 0755-01
BRIGGS & STRATTON

Ref. No.	Part No.	Description	No. Used
1	390399	Cylinder Assembly	1
5	211778	Head - Cylinder	1
7	*270430	Gasket - Cylinder Head	1
8	390321	Breather Assembly	1
9	*27803	Gasket - Valve Cover	1
10	93536	Screw - Sem	1
12	*27750	Gasket - Crankcase Cover - 1/64" thick	1
	*27876	Gasket - Crankcase Cover - .005" thick	1
	*27877	Gasket - Crankcase Cover - .009" thick	1
13	93210	Screw - Cylinder Head (2-9/32" long)	1
14	93211	Screw - Cylinder Head (2-9/16" long)	1
15	91084	Plug - Oil Drain	1
16	261077	Crankshaft	1
18	299167	Cover Assy. - Crankcase	1
19	295964	Bushing - Crankcase Cover Note: Requires special tools for installation.	1
20	298423	Seal - Oil	1
21	66768	Plug - Oil Filler	1
22	93585	Screw - Crankcase Cover Mounting Sem	1
25	390347	Piston Assembly - Standard	1
	390348	Piston Assembly - .010" O.S.	1
	390349	Piston Assembly - .020" O.S.	1
	390350	Piston Assembly - .030" O.S.	1
		PISTON RING SETS; Note: For Chrome Ring Set - Standard Size - order No. 299743.	
26	299569	Ring Set - Piston - Standard Consists of: 211637 Ring - Piston, Comp., Top, Standard 211636 Ring - Piston, Comp., Center, Standard 211635 Ring - Piston, Oil, Std.	1
	299570	Ring Set - Piston - .010" O.S. Consists of: 211649 Ring - Piston, Comp., Top, .010" O.S. 211650 Ring - Piston, Comp., Center, .010" O.S. 211651 Ring - Piston, Oil, .010" O.S.	1
	299571	Ring Set - Piston - .010" O.S. Consists of: 211653 Ring - Piston, Comp., Top, .020" O.S. 211654 Ring - Piston, Comp., Center, .020" O.S. 211655 Ring - Piston, Oil, .020" O.S.	1
	299572	Ring Set - Piston - .030" O.S. Consists of: 211657 Ring - Piston, Comp., Top, .030" O.S. 211658 Ring - Piston, Comp., Center, .030" O.S. 211659 Ring - Piston, Oil, .030" O.S.	1
27	68546	Lock - Piston Pin	1
28	295840	Pin Assy. - Piston - Standard	1
	295841	Pin Assy. - Piston - .005" O.S.	1
29	390401	Rod Assembly - Connecting Note: For Connecting Rod with .020" undersize Crankpin Bore - Order No. 390773.	1
30	222113	Dipper - Connecting Rod	1
31	222114	Lock - Conn. Rod Screw	1
32	92659	Screw - Connecting Rod	1
33	390419	Valve - Exhaust	1
34	261055	Valve - Intake	1
35	65906	Spring - Intake Valve	1
36	26828	Spring - Exhaust Valve	1
40	221596	Retainer - Intake Valve	1
41	292260	Rotocoil - Exhaust Valve	1
42	93630	Retainer - Exhaust Valve Rotocoil	2
45	260933	Tappet - Valve	1
46	210728	Gear - Cam	1
50	210705	Elbow - Intake	1
51	*270684	Gasket - Intake Elbow	1
52	*27828	Gasket - Intake Elbow Mtg.	1
53	93128	Screw - Carburetor Mounting Sem	1
54	93208	Screw - Intake Elbow Mounting Sem	1
81	222263	Lock Muffler Mounting Screw	1
188	93535	Screw - Sem	1
201	260872	Link - Governor	1
209	260695	Spring - Governor	1
219	297656	Gear - Governor	1
220	221551	Washer - Thrust	1

*Included in Gasket Set - Part No. 299577.

CONTINUED ON GRID D-2

ENGINE MODEL NO. 190402 TYPE 0755-01
BRIGGS & STRATTON (Continued)

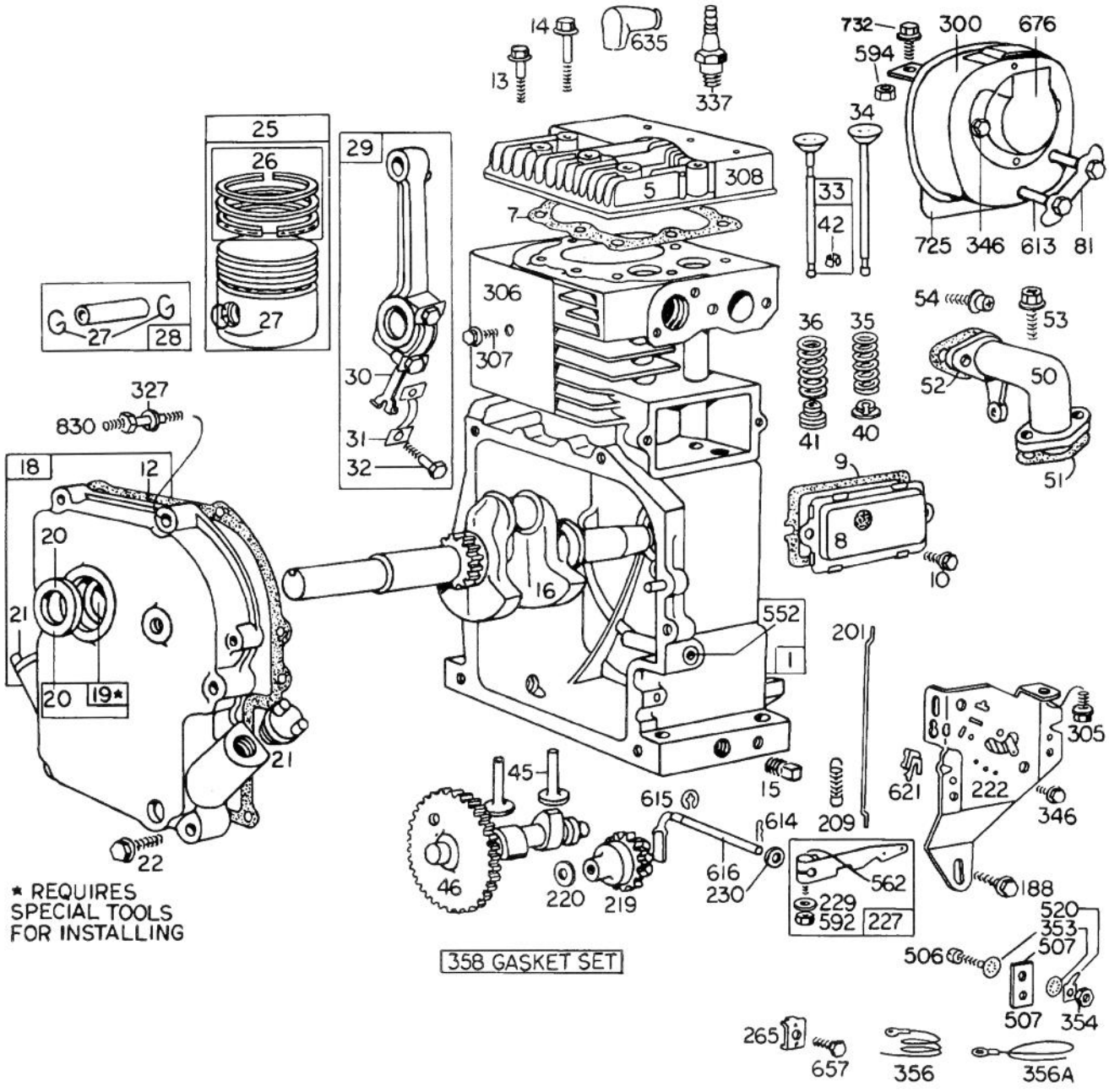

ENGINE MODEL NO. 190402 TYPE 0755-01
BRIGGS & STRATTON (Continued)

Ref. No.	Part No.	Description	No. Used
222	390670	Plate - Governor Control	1
227	299165	Lever Assy. - Governor	1
229	220680	Washer	1
230	221559	Washer - Spacer	1
265	221535	Clamp - Casing	1
300	390918	Muffler - Exhaust	1
305	93158	Screw - Sem	1
306	221898	Shield - Cylinder	1
307	93163	Screw - Cylinder Shield Mtg. Sem	1
308	221901	Cover - Cylinder Head	1
327	91388	Washer - Lock	1
337	298809	Plug - Spark	1
		Note: Spark Plugs 298809, use Ignition Cable Terminal No. 221798.	
346	93014	Screw - Sem	1
353	92791	Washer - Lock - Shakeproof	3
354	90576	Nut - Hex.	2
356	299500	Wire - Ground	1

Ref. No.	Part No.	Description	No. Used
356A	391255	Wire - Ground	1
358	299577	Gasket Set	1
506	90200	Screw - Machine, Fil. Hd.	1
507	66895	Insulator	1
520	93722	Terminal - Spade	1
552	230843	Bushing - Governor Shaft	1
562	92613	Bolt - Governor Lever	1
592	90356	Nut - Hex.	1
594	93203	Nut - Hex.	1
613	93704	Screw Muffler Mounting	1
614	93306	Cotter - Hair Pin	1
615	93307	Retainer - E-Ring	1
616	230842	Crank - Governor	1
621	297472	Switch - Stop	1
635	66538	Elbow - Spark Plug	1
657	93496	Screw - Sem	1
676	22226	Deflector - Exhaust	1
725	221885	Shield - Heat	1
732	93490	Screw Sem	1
830	93730	Stud-Strap to Crankcase Cover	1

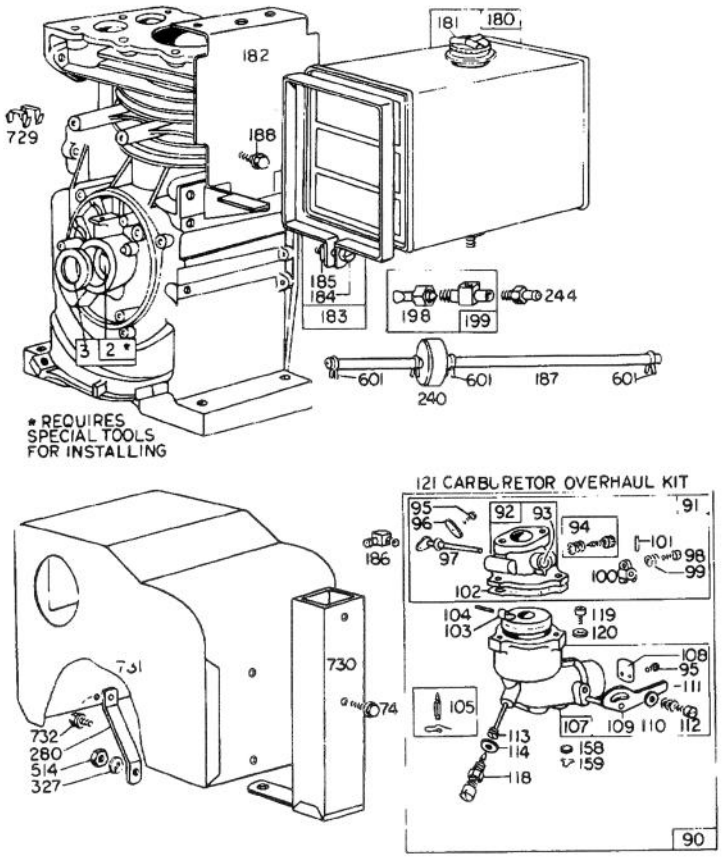

CARBURETOR ASSEMBLY

Ref. No.	Part No.	Description	No. Used
2	295962	Bushing - Cylinder Note: Requires special tools for installation.	1 1
3	294606	Seal - Oil	1
74	93042	Screw - Sem	1
90	390323	Carburetor Assembly	1
91	390404	Body Assembly - Upper Carburetor	1
92	390503	Body - Upper Carburetor	1
93	23108	Bushing - Throttle Shaft	1
94	†292681	Valve Assembly - Carburetor Idle	1
95	93038	Screw - Throttle and Choke Valve Mtg. Sem	1
96	62940	Valve - Throttle	1
97	298826	Shaft and Lever - Throttle	1
98	91920	Screw - Machine, Fil. Hd.	1
99	26157	Spring - Throttle Adjustment	1
100	61967	Stop - Throttle	1
101	93043	Pin – Throttle Stop	1
102	†27918	Gasket - Carburetor Body	1
103	99333	Float - Carburetor	1
104	†230896	Pin - Float Hinge	1

Ref. No.	Part No.	Description	No. Used
105	299096	Valve - Fuel Inlet	1
107	390403	Body Assembly - Lower Carburetor	1
108	62872	Valve - Choke	1
109	298875	Shaft and Lever - Choke	1
110	62899	Washer - Choke Lever	1
111	26155	Spring - Choke Lever	1
112	23123	Screw - Choke Lever	1
113	†390395	Nozzle - Carburetor	1
114	†68667	Gasket - Nozzle	1
118	99525	Valve - Needle	1
119	90746	Screw - Machine, Fil. Hd.	1
120	92290	Washer - Lock	1
121	295938	Carburetor Overhaul Kit	1
158	27590	Filter - Carburetor Drain	1
159	220521	Retainer - Carburetor Drain Filter	1
180	290816	Tank Assy. - Fuel	1
181	297866	Cap - Fuel Tank	1
182	221935	Bracket - Fuel Tank	1
183	291367	Strap Assy. - Fuel Tank	1
184	91257	Screw - Machine, Fil. Hd.	1
185	90970	Nut - Square	1

†Included in Carburetor Overhaul Kit – Part No. 295938

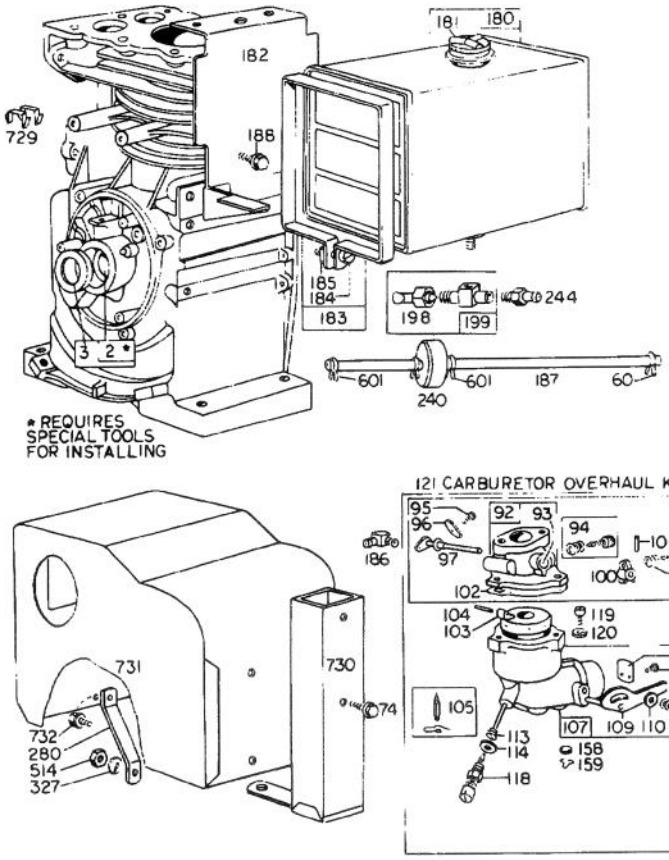

CARBURETOR ASSEMBLY (Continued)

Ref. No.	Part No.	Description	No. Used
186	67218	Connector - Fuel Pipe	1
187	299942	Pipe - Fuel	1
188	93535	Screw - Sem	1
198	293934	Valve - Fuel Shut-Off	1
199	297563	Outlet - Fuel Tank	1
240	298090	Filter - Fuel	1
244	230318	Connector - Fuel Pipe	1
280	222372	Strap - Support	1

Ref. No.	Part No.	Description	No. Used
327	91388	Washer - Lock	1
514	93203	Nut - Hex.	1
601	93053	Clamp - Fuel Pipe	1
729	221907	Clip - Wire	1
730	299384	Stack - Carb.	1
731	391166	Hood - Snow	1
732	93490	Screw - Sem	1

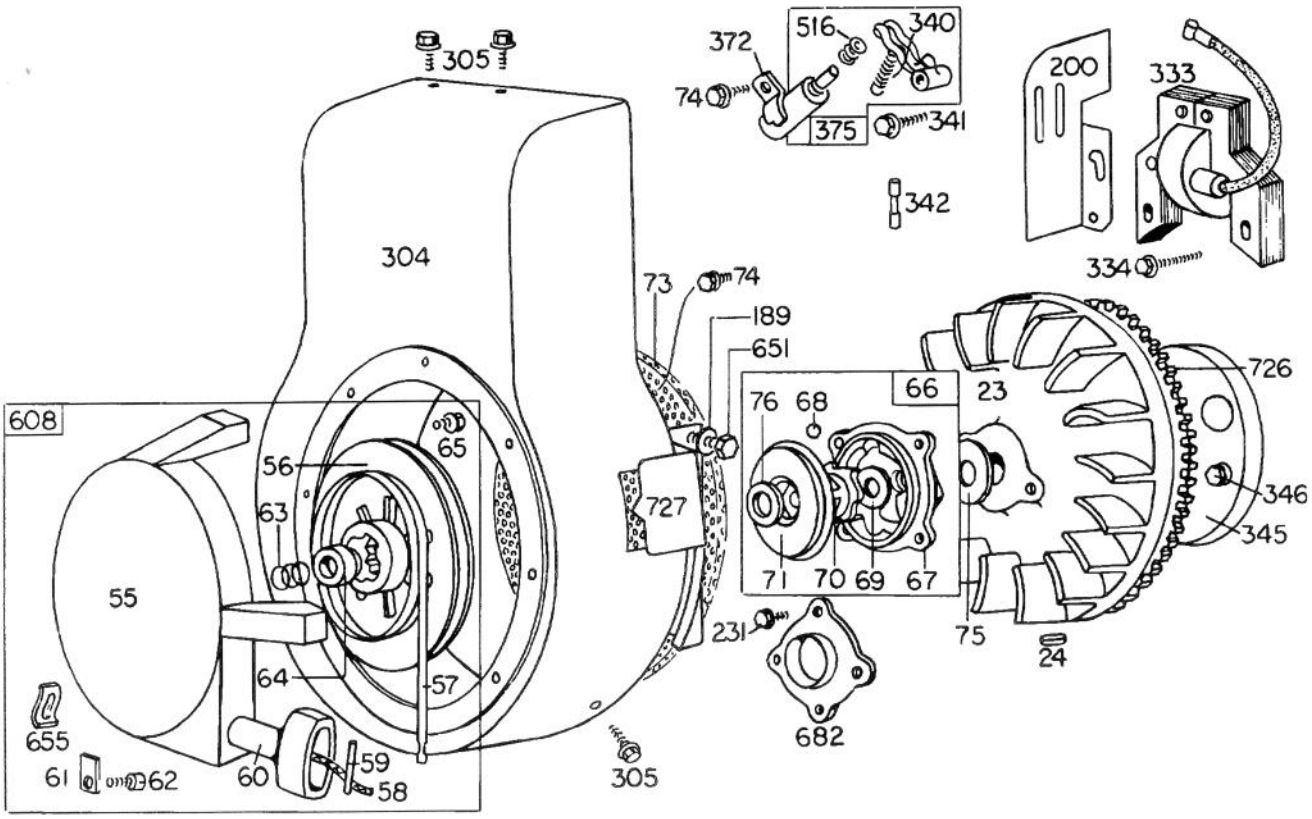

REWIND STARTER ASSEMBLY

Ref. No.	Part No.	Description	No. Used
23	299375	Flywheel - Magneto	1
24	61760	Key - Flywheel	1
55	295272	Housing - Rewind Starter	1
56	295871	Pulley - Rewind Starter	1
57	294303	Spring - Rewind Starter	1
58	66564	Rope - Rewind Starter	1
59	230228	Pin - Starter Grip	1
60	66728	Grip - Starter Rope	1
61	68848	Bumper - Starter Pulley	1
62	93254	Screw - Pulley Bumper Mtg.	1
63	260414	Spring - Ratchet	1
64	230543	Adapter - Ratchet Spring	1
65	93067	Screw - Rewind Starter Housing Mounting Sem	1
66	298798	Clutch Assy. - Rewind Starter	1
67	211383	Housing-Rewind Starter Clutch	1
68	63770	Ball - Clutch	1
69	66718	Washer-Starter Clutch, Thrust	1
70	298799	Ratchet-Rewind Starter Clutch	1
71	221653	Washer - Retainer	1
73	221796	Screen - Rewind Starter	1
74	93042	Screw - Sem	1
75	220865	Washer - Spring	1
76	68238	Washer - Ratchet Sealing	1
189	90366	Washer - Lock	1
200	221760	Guide - Air	1

Ref. No.	Part No.	Description	No. Used
231	93064	Screw - Sem	1
304	390516	Housing - Blower	1
305	93158	Screw - Sem	1
333	298968	Armature Assembly	1
334	93381	Screw - Armature Mtg. Sem	1
340	26018	Spring - Breaker Arm	1
341	93381	Screw - Breaker Arm Mounting Sem	1
342	65704	Plunger - Breaker Point	1
345	222170	Cover - Breaker Point	1
346	93014	Screw - Sem	1
372	220477	Clamp - Condenser	1
375	294628	Breaker Points and Condenser Set Note: 299061 Ignition Kit Includes: 294628 Point Set 65704 Plunger 61760 Key - Flywheel	1
516	260374	Spring - Connector	1
608	295001	Starter Assy. - Rewind	1
651	92034	Screw	1
655	221014	Anchor - Spring	1
682	211516	Shield - Starter Clutch	1
726	299543	Gear, Flywheel Ring (Includes Mounting Parts)	1
727	221940	Guard - Ring Gear	1