Form No. 3325-917

Workman® 2100

Air Cooled Gasoline Utility Vehicle

07253TC—200001200 and Up

Operator's Manual

English (EN)

Warning

The engine exhaust from this product contains chemicals known to the State of California to cause cancer, birth defects, or other reproductive harm.

Important The engine in this product is not equipped with a spark arrester muffler. It is a violation of California Public Resource Code Section 4442 to use or operate this engine on any forest-covered, brush-covered, or grass-covered land as defined in CPRC 4126. Other states or federal areas may have similar laws.

This spark ignition system complies with Canadian ICES-002.

Ce système d'allumage par étincelle de véhicule est conforme à la norme NMB-002 du Canada.

Contents

	Page
Introduction	2
Safety	3
Safe Operating Practices	3
Sound Pressure Level	5
Vibration Level	5
Safety and Instruction Decals	6
Specifications	8
Set-Up	8
Loose Parts	8
Install the Rear Wheels	9
Install the Front Wheels	9
Install the Steering Wheel	9
Install the Bumper	10
Install the Seats	10
Install the Hitch	10
Install the Cargo Box	11
Activate the Battery	11
Check the Crankcase Oil	12
Fuel Tank	12
Check Tire Pressure	13
Operation	13
Think Safety First	13
Controls	13
Pre-Starting Checks	15
Starting Engine	15
Stopping Vehicle	15
Parking Vehicle	15
Cargo Bed	15
Tailgate Latches	16
New Vehicle Break-In	16
Operating Characteristics	17
Passengers	17
Speed	17
Turning	17
Braking	17
Hills	18
Operating on Rough Terrain	18
Loading and Dumping	18
Transporting the Vehicle	19
Towing the Vehicle	19
Towing a Trailer	19
Maintenance	20
Recommended Maintenance Schedule	20
Daily Maintenance Checklist	21
Adjusting Ground Speed	22
Heavy Duty Operation	22
Jacking the Vehicle	22
Neutral Lock Assembly	23
Engine Oil	23
Removing Debris From Engine	24
Air Cleaner	24
Greasing and Lubrication	25
Brakes	26
Inspecting Tires	26
Adjusting Front Suspension	27
Drive Belt	27
Adjusting Starter Generator Belt	27
Front Wheel Toe-In	28
Fuel System	28
Spark Plugs	29
Changing Transaxle Fluid	29
Fuse	30
Headlights	30
Battery	30
Washing the Vehicle	32
Electrical Schematic	33
The Toro General Commercial Products Warranty	36

Introduction

Read this manual carefully to learn how to operate and maintain your product properly. The information in this manual can help you and others avoid injury and product damage. Although Toro designs and produces safe products, you are responsible for operating the product properly and safely.

© 2000 by The Toro Company
8111 Lyndale Avenue South
Bloomington, MN 55420-1196

All Rights Reserved
Printed in the USA

Whenever you need service, genuine Toro parts, or additional information, contact an Authorized Service Dealer or Toro Customer Service and have the model and serial numbers of your product ready. Figure 1 illustrates the location of the model and serial numbers on the product.

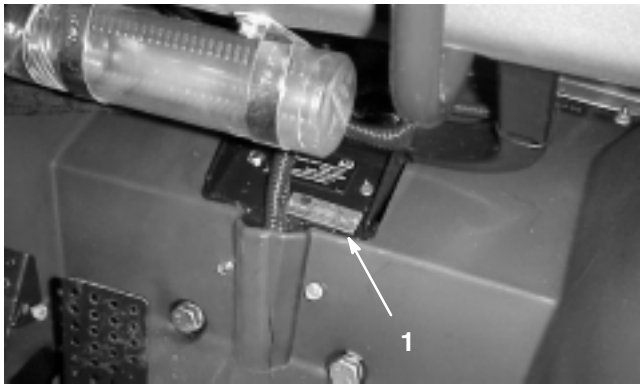

Figure 1

1. Location of the model and serial numbers

Write the product model and serial numbers in the space below:

Model No. _____

Serial No. _____

This manual identifies potential hazards and has special safety messages that help you and others avoid personal injury and even death. ***Danger***, ***Warning***, and ***Caution*** are signal words used to identify the level of hazard. However, regardless of the hazard, be extremely careful.

Danger signals an extreme hazard that *will* cause serious injury or death if you do not follow the recommended precautions.

Warning signals a hazard that *may* cause serious injury or death if you do not follow the recommended precautions.

Caution signals a hazard that may cause minor or moderate injury if you do not follow the recommended precautions.

This manual uses two other words to highlight information. **Important** calls attention to special mechanical information and **Note:** emphasizes general information worthy of special attention.

Safety

Improper use or maintenance by the operator or owner can result in injury. To reduce the potential for injury, comply with these safety instructions and always pay attention to the safety alert ⚠ symbol, which means CAUTION, WARNING, or DANGER—"personal safety instruction." Failure to comply with the instruction may result in personal injury or death.

Supervisors, operators, and service persons should be familiar with the following standards and publications: (The material may be obtained from the address shown).

- Flammable and Combustible Liquids Code: ANSI/NFPA 30
- National Fire Protection Association: ANSI/NFPA #505; Powered Industrial Trucks
  ADDRESS:
  National Fire Prevention Association
  Barrymarch Park
  Quincy, Massachusetts 02269 U.S.A.
- ANSI/ASME B56.8 Personal Burden Carriers
  ADDRESS:
  American National Standards Institute, Inc.
  1430 Broadway
  New York, New York 10018 U.S.A.
- ANSI/UL 558; Internal Combustion Engine Powered Industrial Trucks
  ADDRESS:
  American National Standards Institute, Inc.
  1430 Broadway
  New York, New York 10018 U.S.A.
  OR
  Underwriters Laboratories
  333 Pfingsten Road
  Northbrook, Illinois 60062 U.S.A.

Safe Operating Practices

⚠ Warning ⚠

The Workman is an off-highway vehicle only and is not designed, equipped, or manufactured for use on public streets, roads, or highways.

Supervisor's Responsibilities

1. Make sure operators are thoroughly trained and familiar with the Operator's Manual and all labels on the vehicle.
2. Be sure to establish your own special procedures and work rules for unusual operating conditions (e.g. slopes too steep for vehicle operation).

Before Operating

1. Operate the machine only after reading and understanding the contents of this manual.
2. **Never** allow children to operate the vehicle. **Never** allow adults to operate it without proper instructions. Only trained and authorized persons should operate this vehicle. Make sure all operators are physically and mentally capable of operating the vehicle. Anyone who operates the vehicle should have a motor vehicle license.
3. This vehicle is designed to carry **only you**, the operator, and **one passenger** in the seat provided by the manufacturer. **Never** carry any other passengers on the vehicle.
4. **Never** operate the vehicle when under the influence of drugs or alcohol.
5. Become familiar with the controls and know how to stop the engine quickly.
6. Keep all shields, safety devices and decals in place. If a shield, safety device or decal is malfunctioning, illegible, or damaged, repair or replace it before operating the machine.
7. Always wear substantial shoes. Do not operate the machine while wearing sandals, tennis shoes or sneakers. Do not wear loose fitting clothing or jewelry which could get caught in moving parts and cause personal injury.
8. Wearing safety glasses, safety shoes, long pants and a helmet is advisable and required by some local safety and insurance regulations.
9. Keep everyone, especially children and pets, away from the areas of operation.
10. Before operating the vehicle, always check all parts of the vehicle and any attachments. If something is wrong, **stop using the vehicle**. Make sure the problem is corrected before the vehicle or attachment is operated again.
11. Since gasoline is highly flammable, handle it carefully.
    A. Use an approved gasoline container.
    B. Do not remove cap from fuel tank when engine is hot or running.
    C. Do not smoke while handling gasoline.
    D. Fill fuel tank outdoors and to about one inch below top of tank (bottom of filler neck). Do not overfill.
    E. Wipe up any spilled gasoline.

While Operating

Warning

Engine exhaust contains carbon monoxide, which is an odorless, deadly poison that can kill you. It is also known to the State of California to cause birth defects.

Do not run engine indoors or in an enclosed area.

1. Operator and passenger should remain seated whenever the vehicle is in motion. Operator should keep both hands on steering wheel, whenever possible and passenger should use hand holds provided. Keep arms and legs within the vehicle body at all times. Never carry passengers in box or on attachments. Remember your passenger may not be expecting you to brake or turn and may not be ready.
2. When operating with a heavy load in the cargo box, reduce your speed and allow for sufficient braking distance. Stopping distance will increase with increased loads. Use extra caution on slopes.
3. Never overload your vehicle. Name plate (located under dash on center column) shows load limits for vehicle. Never overload attachments or exceed the GVW.
4. Using the machine demands attention. Failure to operate vehicle safely may result in an accident, tip over of vehicle and serious injury or death. Drive carefully. To prevent tipping or loss of control:
    A. Use extreme caution, reduce speed and maintain a safe distance around sand traps, ditches, creeks, ramps, unfamiliar areas, or any areas that have abrupt changes in ground conditions or elevation.
    B. Watch for holes or other hidden hazards.
    C. Use caution when operating vehicle on a slope. Normally travel straight up and down slopes. Reduce speed when making sharp turns or when turning on hillsides. Avoid turning on hillsides whenever possible.
    D. Use extra caution when operating vehicle on wet surfaces, at higher speeds or with a full load. Stopping time and distance will increase with a full load. Slow down before starting up or down a hill.
    E. When loading box, distribute load evenly. Use extra caution if the load exceeds the dimensions of the box and when handling off-center loads that cannot be centered. Keep loads balanced and secure to prevent them from shifting.
    F. Avoid sudden stops and starts. Do not go from reverse to forward or forward to reverse without first coming to a complete stop.

G. Do not attempt sharp turns or abrupt maneuvers or other unsafe driving actions that may cause a loss of vehicle control.

H. When dumping, do not let anyone stand behind vehicle and do not dump load on any one's feet. Release tailgate latches from side of box, not from behind.

I. Only operate/drive vehicle when cargo box is down and latched.

J. Before backing up, look to the rear and assure no one is behind. Back up slowly.

K. Watch out for traffic when near or crossing roads. Always yield the right of way to pedestrians and other vehicles. This vehicle is **not** designed for use on streets or highways. Always signal your turns or stop early enough so other persons know what you plan to do. Obey all traffic rules and regulations.

L. Never operate vehicle in or near an area where there is dust or fumes in the air which are explosive. The electrical and exhaust systems of the vehicle can produce sparks capable of igniting explosive materials.

M. Always watch out for and avoid low overhangs such as tree limbs, door jambs, over head walkways, etc. Make sure there is enough room over head to easily clear the vehicle and your head.

N. If ever unsure about safe operation, **stop work** and ask your supervisor.

O. When operating the vehicle on rough terrain or near curbs, reduce your speed and grip the outside of the steering wheel. Keep your hands and fingers away from the steering wheel spokes.

5. Do not touch engine or muffler while engine is running or soon after it has stopped because these areas may be hot enough to cause burns.

6. If the machine ever vibrates abnormally, stop immediately, wait for all motion to stop, and inspect for damage. Repair all damage before commencing operation.

7. Before getting off the seat:

A. Stop movement of the machine;

B. Set parking brake;

C. Turn ignition key to OFF;

D. Remove key from ignition;

Note: If vehicle is on an incline, block wheels after getting off of vehicle.

Maintenance

1. Only qualified and authorized personnel shall be permitted to maintain, repair, adjust, or inspect the vehicle.

2. Before servicing or making adjustments to the machine, stop the engine, set the parking brake, and remove the key from the ignition to prevent someone from accidentally starting the engine.

3. To make sure entire machine is in good condition, keep all nuts, bolts and screws properly tightened.

4. To reduce potential fire hazard, keep the engine area free of excessive grease, grass, leaves, and accumulation of dirt.

5. Never use an open flame to check level or leakage of fuel or battery electrolyte.

6. If the engine must be running to perform a maintenance adjustment, keep hands, feet, clothing, and any parts of the body away from the engine and any moving parts. Keep everyone away.

7. Do not use open pans of fuel or flammable cleaning fluids for cleaning parts.

8. **Do not adjust** the ground speed governor. To assure safety and accuracy, have an Authorized Toro Distributor check the ground speed.

9. If major repairs are ever needed or assistance is required, contact an Authorized Toro Distributor.

10. To be sure of optimum performance and safety, always purchase genuine Toro replacement parts and accessories. Replacement parts and accessories made by other manufacturers could be dangerous. Altering this vehicle in any manner may affect the vehicle's operation, performance, durability or its use may result in injury or death. Such use could void the product warranty of The Toro Company.

Sound Pressure Level

This unit has an equivalent continuous A-weighted sound pressure at the operator ear of 80 dB(A) based on measurements of identical machines per SAE J1174-MAR 85 procedures.

Vibration Level

This unit does not exceed a vibration level of 2.5 m/s^2 at the hands based on measurements of identical machines per ISO 5349 procedures.

This unit does not exceed a vibration level of 0.5 m/s^2 at the posterior based on measurements of identical machines per ISO 2631 procedures.

Safety and Instruction Decals

Safety decals and instructions are easily visible to the operator and are located near any area of potential danger. Replace any decal that is damaged or lost.

On Back of Rear Frame
(Part No. 99-7350)

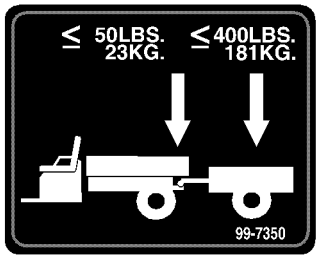

Under Dash on Center Frame
(Part No. 99-7348)

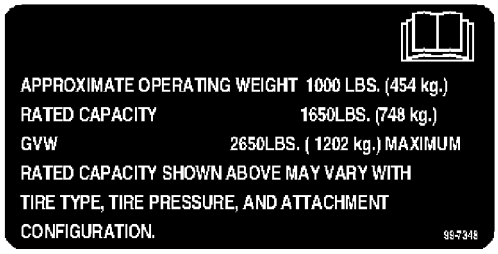

On Left Side of Rear Frame
(Part No. 99-7349)

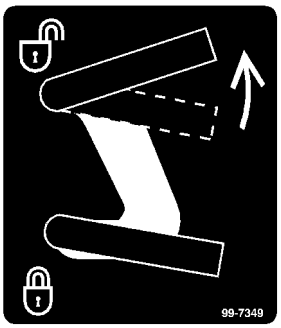

On Floor Near Pedals
(Part No. 99-7346)

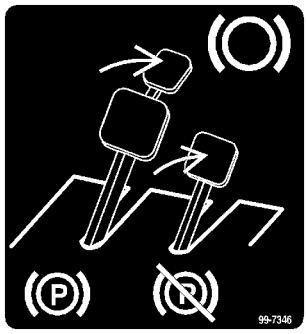

On Gear Shift Selector
(Part No. 99-7347)

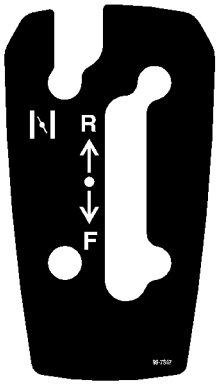

On Inside of Cargo Box
(Part No. 99-7342)

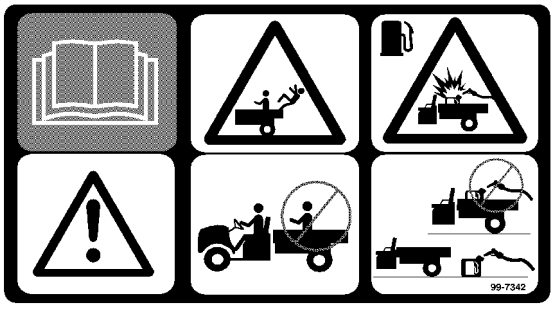

On Right and Left Side
of Rear Frame
(Part No. 99-7345)

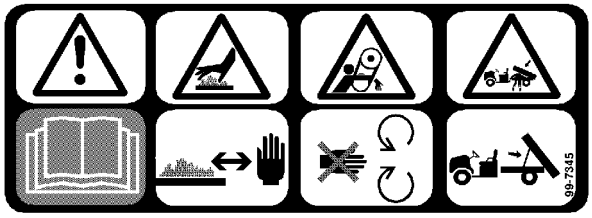

On Dash Panel
(Part No. 99-7344)

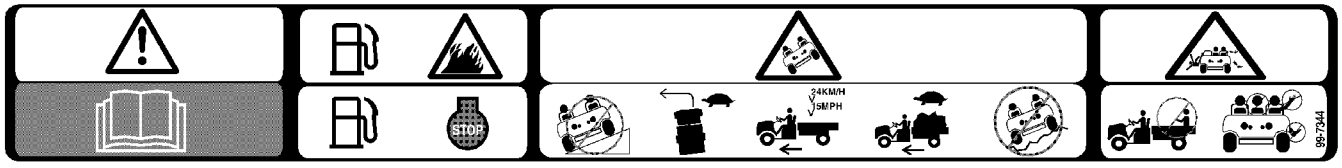

On Dash Panel
(Part No. 99-7343)

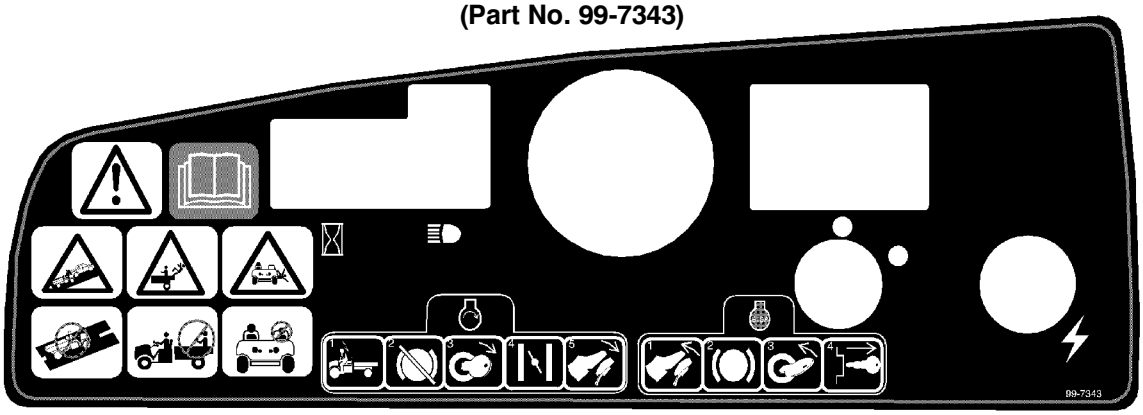

On Fuse Block Cover
(Part No. 99-7352)

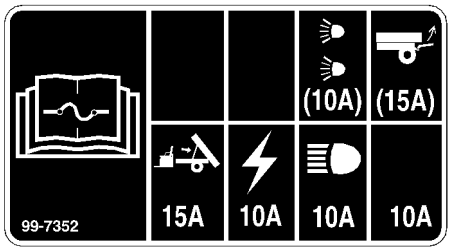

Specifications

Type: 4 wheel step through, two person vehicle.

Engine: Briggs & Stratton, V-twin cylinder, 4 cycle, OHV, air cooled, gas engine, 16 hp @ 3600 rpm, 29.3 cu. in. (480 cc) displacement, 1.5 qt. oil capacity. Electronic ignition. Full pressure lubrication, oil filter. Remote air cleaner with replaceable element.

Battery: 12 volt with 280 cold cranking Amps @ 0 degrees F.

Fuel System: Gasoline tank capacity is 7 gallons.

Transaxle: Rear transaxle configuration, single speed forward and reverse gearbox with differential.

Frame: Welded, high strength steel channels and tubes.

Front Suspension: Independent "A" frame control arm with integral suspension.

Rear Suspension: Solid mounted transaxle.

Steering System: Manual; non-adjustable column

Tires: 22.5″ x 10″-8, 4-ply rating, turf tread

Brakes: 6.3″ rear drum mechanical actuator.

Seats: Bucket seats with hip restraint; tip forward for storage access.

ROPS/Seat Belts: optional

Controls: Foot operated accelerator, brake pedal, and parking brake; Step-n-Go throttle/brake release feature; ignition switch, light switch, choke knob, power accessory plug, and forward/reverse gear shift selector.

Gauges: Hour meter, oil pressure warning light and fuel gauge.

Lights: Twin halogen headlights.

Tow Hitch: Hitch has hole for ball or pin.

Cargo Box: rotational molded plastic box with manual dump, maximum tip angle of 45 degrees.

Forward Speed: 16 mph maximum

General Specifications (approx.):

Base Weight — Dry 1000 lbs.

Rated Capacity: 1650 lbs.
(includes 200 lb. operator and 200 lb. passenger)

Maximum Gross Vehicle Weight — 2650 lbs.

Tow Capacity:
Standard Hitch: Tongue weight 50 lbs.
Maximum trailer weight 400 lbs.
Heavy Duty Hitch: Tongue weight 100 lbs.
Maximum trailer weight 800 lbs.

Overall Width: 60″

Overall Length: 117″

Ground Clearance:
9.25″ at front w/no load or operator
6.50″ at rear w/no load or operator

Wheel Base: 79″

Wheel Tread (center line to center line): 49″ front
48.25″ rear

Cargo Box Length: 46″ inside
51″ outside

Cargo Box Width: 49″ inside
54″ outside

Cargo Box Height: 10″ inside

Specifications and design subject to change without notice.

Set-Up

Loose Parts

Note: Use the chart below to verify all parts have been shipped.

Description	Qty.	Use
Wheel Assembly	2	Install rear wheels.
Wheel Assembly	2	Mount front wheels.
Washer	2	
Dust Cap	2	

Description	Qty.	Use
Steering Wheel	1	Install steering wheel.
Bumper	1	Mount to front of frame.
Hitch	1	Mount to rear of frame.
Seat	2	Mount to seat base.
Cargo Box Pivot Bracket-Right Hand Pivot Bracket-Left Hand Prop Rod Clip Capscrew- 3/8 x 1″ long Capscrew- 5/16 x 3/4″ long	1 1 1 1 4 2	Install cargo box.
Operator's Manual	2	Read before operating machine.
Parts Catalog	1	Use for ordering replacement parts.
Registration Card	1	Complete and return to Toro.
Predelivery Inspection Form	1	Complete and file in customer history portfolio.

Install the Rear Wheels

1. Remove the fasteners securing the wheels.
2. Remove the shipping bracket secured to the wheel studs.
3. Mount the wheels with the previously removed fasteners (Fig. 2) and torque the nuts to 45-65 ft-lb.

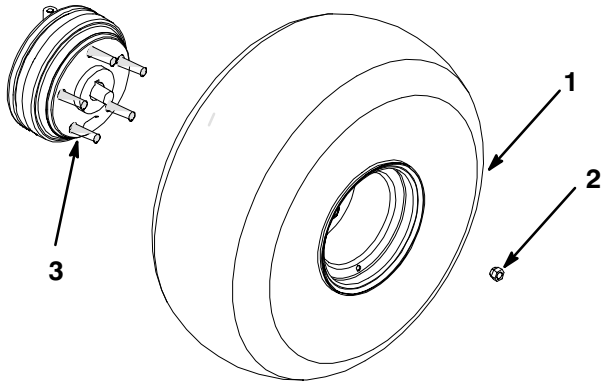

Figure 2

1. Wheel assembly
2. Wheel nut
3. Wheel stud

Install the Front Wheels

1. Remove the fasteners securing the wheels.
2. Remove the shipping bracket from the spindles.
3. Apply Loctite (blue) to the capscrew threads.
4. Mount the wheels with the previously removed fasteners (Fig. 3) and torque the bolts to 135-165 ft-lb.

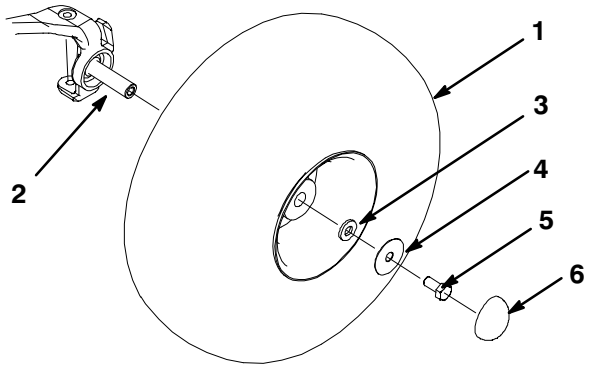

Figure 3

1. Tire & wheel assembly
2. Spindle
3. Small washer
4. Large washer
5. Capscrew
6. Dust cap

Install the Steering Wheel

1. Remove the hex nut and lock washer from the steering shaft.
2. Slide the steering wheel and washer onto the shaft. The steering wheel needs to be positioned on the shaft so the cross beam is horizontal when the tires are pointed straight ahead and the thicker spoke of the steering wheel is downward.

3. Secure steering wheel to shaft with hex nut (Fig. 4).

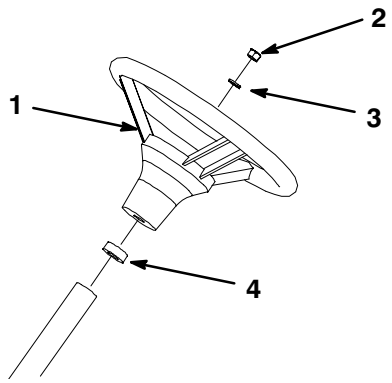

Figure 4

1. Steering wheel
2. Hex nut
3. Washer
4. Foam seal

Install the Bumper

1. Remove the (2) capscrews, washers and nuts secured to the front of the frame.
2. Align the mounting holes and secure the bumper to the frame with the fasteners previously removed (Fig. 5).

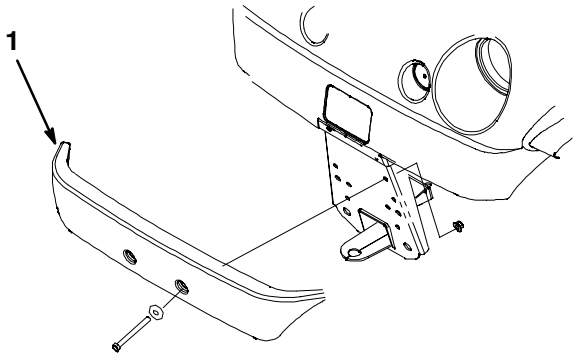

Figure 5

1. Bumper

Install the Seats

1. Insert the seat bracket into the seat base opening and pivot the seat downward (Fig. 6).

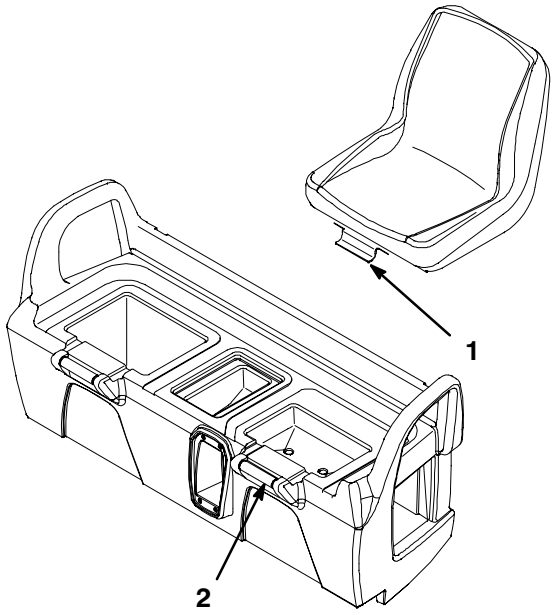

Figure 6

1. Seat bracket
2. Seat base

Install the Hitch

1. Remove the (4) screws and nuts from the inside rear of the frame.
2. Align the hitch with the mounting holes on the frame. Secure the hitch with the screws and nuts (Fig. 7).

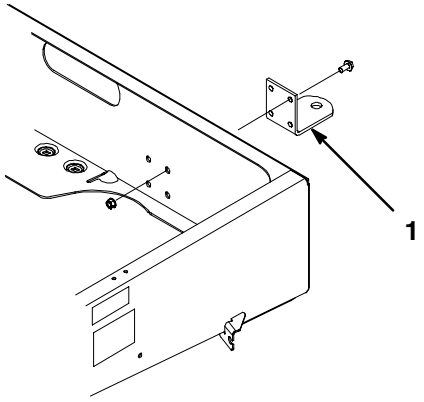

Figure 7

1. Hitch

Install the Cargo Box

1. Position the cargo box onto the frame. The cargo box must lay flat and be centered.
2. Mount the left hand pivot bracket to the left rear corner of the frame with (2) 3/8 x 1″ capscrews. Position the bracket as shown in Figure 8.

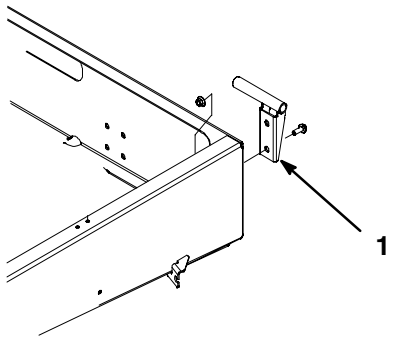

Figure 8

1. Pivot bracket

3. Slide the cargo box mounting hole onto the pivot bracket (Fig. 9).

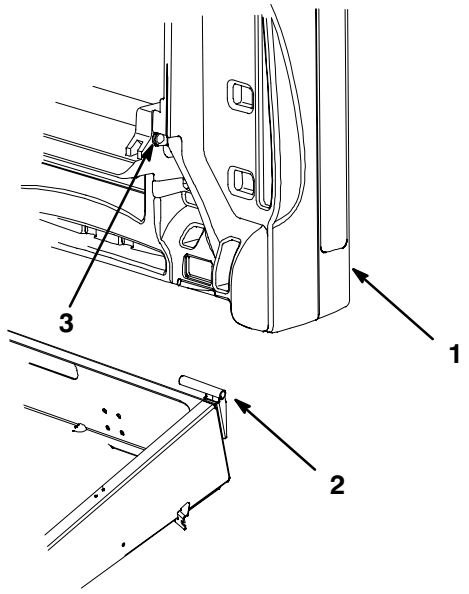

Figure 9

1. Cargo box
2. Pivot bracket
3. Cargo box mounting hole

4. Insert the right hand pivot bracket into the mounting hole in the cargo box and then mount it to the frame.
5. Have a helper raise the cargo box until the "J" hook end of the prop rod is positioned between the (2) holes on the left frame rail (Fig. 10).

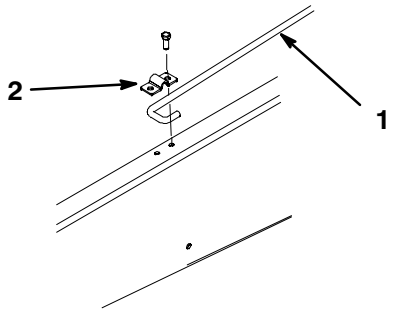

Figure 10

1. Prop rod
2. Prop rod clip

6. Secure the prop rod to the frame rail with the prop rod clip and (2) 5/16 x 3/4″ capscrews (Fig. 10).
7. Lower the cargo box.

Activate the Battery

If the battery is not filled with electrolyte or activated, it must be removed from the vehicle, filled with electrolyte, and charged. Bulk electrolyte with 1.260 specific gravity must be purchased from a local battery supply outlet.

1. Remove the rubber strap securing the battery to the battery base. Lift the battery out of the battery base.

Danger

Battery electrolyte contains sulfuric acid which is a deadly poison and causes severe burns.

- **Do not drink electrolyte and avoid contact with skin, eyes or clothing. Wear safety glasses to shield your eyes and rubber gloves to protect your hands.**
- **Fill the battery where clean water is always available for flushing the skin.**

2. Remove the filler caps from the battery and slowly fill each cell until electrolyte is just above the plates.
3. Replace the filler caps and connect a 3 to 4 amp battery charger to the battery posts. Charge the battery at a rate of 3 to 4 amperes for 4 to 8 hours (12 volts). Do not overcharge the battery.

Warning

Charging the battery produces gasses that can explode.

Never smoke near the battery and keep sparks and flames away from battery.

4. When the battery is charged, disconnect the charger from the electrical outlet and battery posts.

5. Remove the filler caps. Slowly add electrolyte to each cell until electrolyte is up to the fill line. Install the filler caps.

Important Do not overfill the battery. Electrolyte will overflow onto other parts of the vehicle and severe corrosion and deterioration will result.

6. Install the battery; refer to Installing the Battery, page 31.

Check the Crankcase Oil

The engine is shipped with oil in the crankcase; however, level of oil must be checked before and after the engine is first started.

1. Position machine on a level surface.

2. Remove dipstick and wipe it with a clean rag (Fig. 11). Insert dipstick into tube and make sure it is seated fully. Remove dipstick and check level of oil.

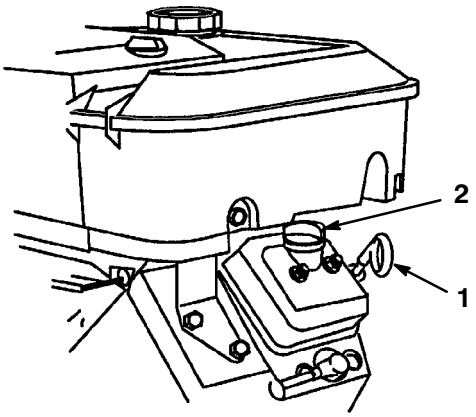

Figure 11

1. Dipstick 2. Filler cap

3. If oil level is low, remove filler cap from valve cover (Fig. 11) and pour oil into opening until the oil level is up to the "FULL" mark on the dipstick; refer to Engine Oil, page 23, for proper oil type and viscosity. Add the oil slowly and check the level often during this process. **Do not overfill.**

4. Install the dipstick firmly in place.

Fuel Tank

Recommended Gasoline

The Toro Company strongly recommends the use of fresh, clean, UNLEADED regular grade gasoline in Toro gasoline powered products. Unleaded gasoline burns cleaner, extends engine life, and promotes good starting by reducing the build-up of combustion chamber deposits. Minimum Octane rating of 85.

Important Never use gasoline containing METHANOL, gasoline containing more than 10% ethanol, gasoline additives, or white gas because engine fuel system damage could result.

Danger

In certain conditions, gasoline is extremely flammable and highly explosive. A fire or explosion from gasoline can burn you and others and can damage property.

- **Fill the fuel tank outdoors, in an open area, when the engine is cold. Wipe up any gasoline that spills.**
- **Do not fill the fuel tank completely full. Add gasoline to the fuel tank until the level is 1 in. (25 mm) below the bottom of the filler neck. This empty space in the tank allows gasoline to expand.**
- **Never smoke when handling gasoline, and stay away from an open flame or where gasoline fumes may be ignited by a spark.**
- **Store gasoline in an approved container and keep it out of the reach of children. Never buy more than a 30-day supply of gasoline.**
- **Always place gasoline containers on the ground away from your vehicle before filling.**
- **Do not fill gasoline containers inside a vehicle or on a truck or trailer bed because interior carpets or plastic truck bed liners may insulate the container and slow the loss of any static charge.**
- **When practical, remove gas-powered equipment from the truck or trailer and refuel the equipment with its wheels on the ground.**
- **If this is not possible, then refuel such equipment on a truck or trailer from a portable container, rather than from a gasoline dispenser nozzle.**
- **If a gasoline dispenser nozzle must be used, keep the nozzle in contact with the rim of the fuel tank or container opening at all times until fueling is complete.**

Filling the Fuel Tank

Fuel tank capacity is approximately 7 gallons.

1. Shut the engine off and set the parking brake.
2. Clean area around fuel tank cap (Fig. 12).

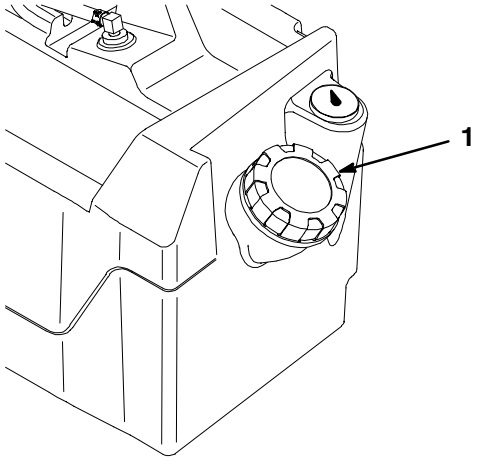

Figure 12

1. Fuel tank cap

3. Remove fuel tank cap.
4. Fill tank to about one inch below top of tank, (bottom of filler neck). This space in the tank allows gasoline to expand. **Do not overfill.**
5. Install fuel tank cap securely. Wipe up any fuel that may have spilled.

Check Tire Pressure

Check tire pressure every 8 hours or daily to assure proper levels.

Air pressure range in front and rear tires is 8-22 psi.

The air pressure needed is determined by the payload carried. The **lower** the air pressure, the less the compaction and tire marks are minimized. Lower pressure should not be used for heavy payloads at high speeds.

Higher pressures should be used for heavier payloads at higher speeds. Do not exceed the maximum pressure.

Operation

Think Safety First

Please carefully read all the safety instructions and symbols in the safety section. Knowing this information could help you or bystanders avoid injury.

Controls

Accelerator Pedal

The accelerator pedal (Fig. 13) gives the operator the ability to vary ground speed of the vehicle. Depressing the pedal starts the engine. Depressing the pedal farther increases ground speed. Releasing the pedal will slow the vehicle and the engine will stop running.

Brake Pedal

The brake pedal is used to stop or slow vehicle (Fig. 13).

Caution

Brakes can become worn or can be misadjusted resulting in personal injury.

If brake pedal travels to within 1″ of the vehicle floor board, the brakes must be adjusted or repaired.

Parking Brake

The parking brake is a small plate at the top of the brake pedal (Fig. 13). Whenever the engine is shut off, the parking brake must be engaged to prevent accidental movement of the vehicle. To engage the parking brake, step on the brake pedal firmly and roll forward with the top of your foot. To disengage, depress the accelerator pedal. If vehicle is parked on a steep grade, make sure parking brake is applied. Place blocks at the downhill side of wheels.

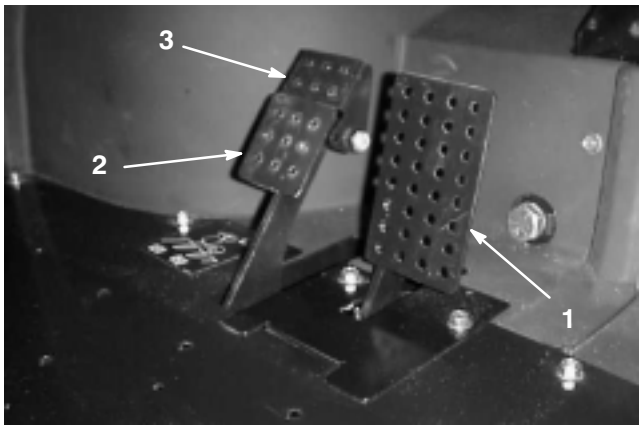

Figure 13

1. Accelerator pedal
2. Brake pedal
3. Parking brake

Choke Control

The choke control is located below and to the right of the operator's seat. To start a cold engine, close carburetor choke (Fig. 14) by pulling choke control outward to ON position. After engine starts, regulate choke to keep engine running smoothly. As soon as possible, open the choke by pushing the control in to the OFF position. A warm engine requires little or no choking.

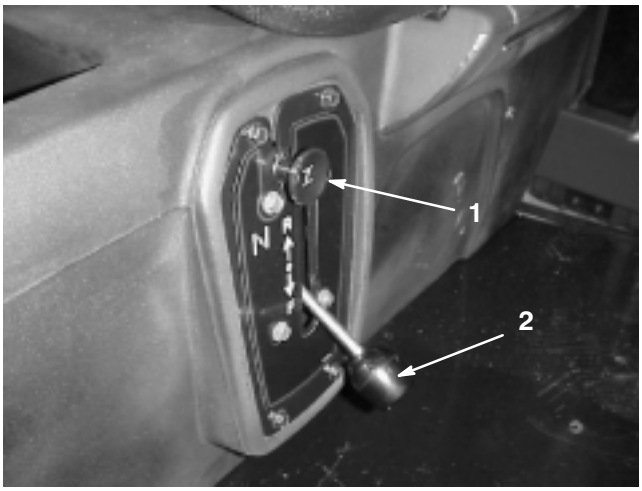

Figure 14

1. Choke
2. Gear shift selector

Gear Shift Selector

The gear shift selector moves the vehicle in the desired direction—forward or reverse (Fig. 14). The vehicle will start in either direction.

Note: If the gear shift selector is in REVERSE when the ignition is turned on, a buzzer will sound to warn the operator.

Important The vehicle should always be stopped before changing the gear selection and direction.

Ignition Switch

The ignition switch (Fig. 15), used to start and stop the engine, has two positions: OFF and ON. Rotate the key clockwise—ON position—to allow operation. When the vehicle is stopped, rotate the key counterclockwise to OFF position. Remove the key from the ignition.

Hour Meter

The hour meter (Fig. 15) indicates the total number of hours the engine is running. The hour meter starts to function whenever the accelerator is depressed.

Oil Light

The oil light warns the operator if the engine oil pressure drops below a safe level (Fig. 15). If the light comes on and remains lit, the oil level should be checked and oil added if necessary; see Engine Oil, page 23.

Note: The oil light may flicker. This is normal and no action needs to be taken.

Light Switch

Toggle switch to activate headlights. Push to turn lights "ON" (Fig. 15).

Power Point

The power point is used to power optional electrical accessories (Fig. 15).

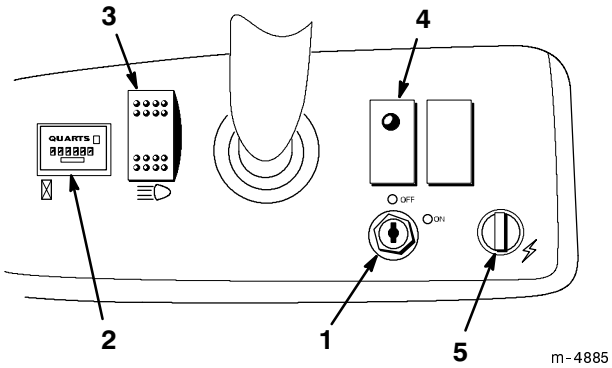

Figure 15

1. Ignition switch
2. Hour meter
3. Light switch
4. Oil light
5. Power Point

Fuel Gauge

The fuel gauge (Fig. 16) shows amount of fuel in tank.

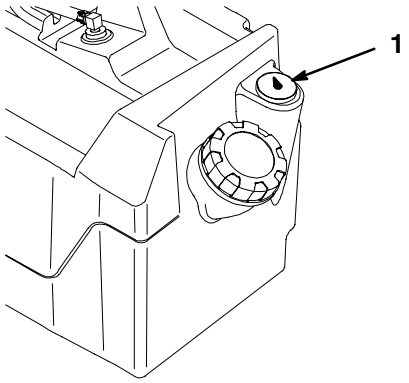

Figure 16

1. Fuel gauge

Passenger Hand Holds

The passenger hand holds are located on the right side of the dash panel and at the outside of each seat (Fig. 17).

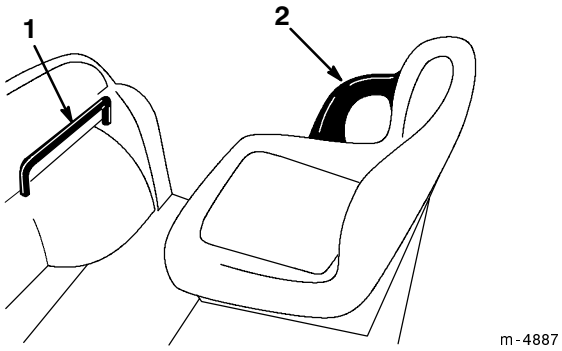

Figure 17

1. Passenger hand hold
2. Hip restraint

Pre-Starting Checks

Safe operation begins before taking the vehicle out for a day's work. You should check these items each time:

1. Check tire pressure.

Note: These tires are different than car tires, they require less pressure to minimize turf compaction and damage.

2. Check all fluid levels and add the appropriate amount of Toro specified fluids, if any are found to be low.
3. Check brake pedal operation.
4. Check to see that the lights are working.
5. Turn steering wheel to the left and right to check steering response.
6. Check for oil leaks, loose parts and any other noticeable malfunctions. Make sure engine is off and all moving parts have stopped before checking for oil leaks, loose parts and other malfunctions.

If any of the above items are not correct, notify your mechanic or check with your supervisor before taking the vehicle out for the day. Your supervisor may want you to check other items on a daily basis, so ask what your responsibilities are.

Starting Engine

1. Sit in the operator's seat and disengage the parking brake.
2. Insert key into ignition switch and rotate it clockwise to the ON position.

Note: If the gear shift selector is in REVERSE, the buzzer will sound to warn the operator.

3. Move gear shift selector to desired position.
4. Slowly step on the accelerator pedal.

Note: The parking brake will automatically disengage when the accelerator pedal is depressed.

Note: If engine is cold, depress and hold the accelerator pedal about half way down and pull choke knob out to ON position.

Important Do not attempt to push or tow vehicle to get it started.

Stopping Vehicle

To stop machine, remove foot from accelerator pedal and slowly depress the brake pedal.

Note: Stopping distance may vary depending on the vehicle load and speed.

Parking Vehicle

1. Engage the parking brake and rotate ignition key to OFF.
2. Remove key from switch to prevent accidental starting.

Cargo Bed

Raising the Bed

1. Slide latch upward toward top of cutout in bed frame (Fig. 18).

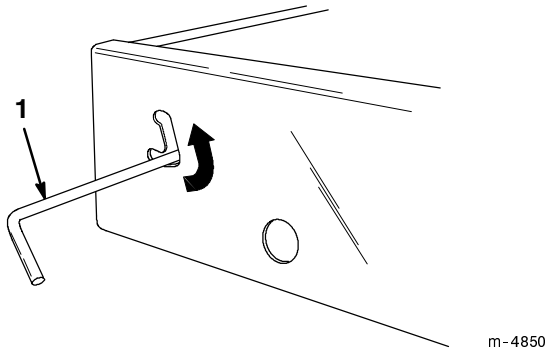

Figure 18

1. Latch

2. Lift up on latch with one hand while raising bed with other hand.

3. Pull up on prop rod to lock in place (Fig. 19).

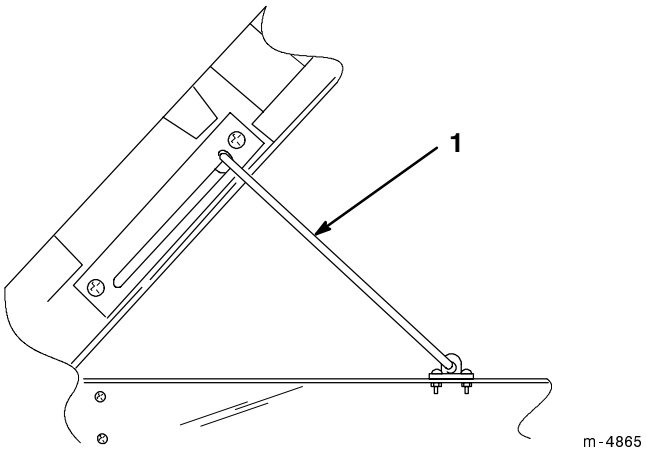

Figure 19

1. Prop rod

Lowering the Bed

1. Lift up bed slightly with one hand while pressing down on prop rod.
2. Lower bed until latch engages.
3. To secure bed tightly to the bed frame, move latch to lower section of cutout.

Tailgate Latches

1. To open the tailgate latches, push the latches toward the outside of the vehicle (Fig. 20).
2. Lift the latches up. The latches will spring out toward the center of the tailgate. Slowly lower the tailgate.

Note: You may need to push the end of the tailgate in (especially if there is a load against the tailgate) before the latches will spring toward the center of the tailgate and release.

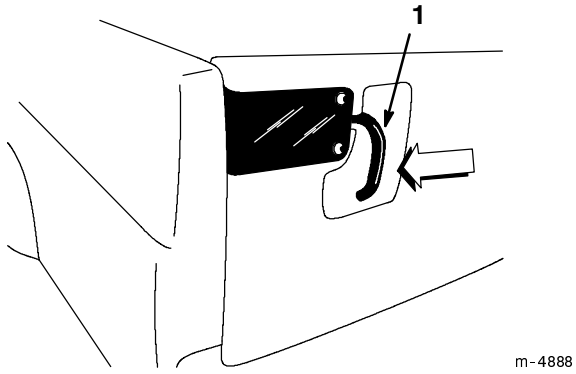

Figure 20

1. Tailgate latch

3. To close the tailgate latches, lift the handles upward and slide them toward the outside of the vehicle.
4. Push the latch handles downward to secure the latch and tailgate.

New Vehicle Break-In

To provide proper performance and long vehicle life, follow these guidelines for the first 100 operating hours.

- Check the fluid and engine oil levels regularly and be alert for indications of overheating in any component of the vehicle.
- After starting a cold engine, let it warm up for about 15 seconds before accelerating.
- Avoid hard braking situations for the first several hours of new vehicle brake-in operation. New brake linings may not be at optimum performance until several hours of use has caused the brakes to become burnished (broke-in).
- Vary vehicle speeds during operation. Avoid fast starts and quick stops.
- A break-in oil for engine is not required. Original engine oil is the same type specified for regular oil changes.
- Refer to Maintenance section of Operator's Manual for any special low hour checks.
- Check front suspension positioning and adjust if necessary; refer to Adjusting Front Suspension, page 27.

Operating Characteristics

The vehicle is designed with safety in mind. It has four wheels for added stability. It uses familiar automotive style controls, including the steering wheel, brake pedal, and accelerator pedal. It is important to remember, however, that this vehicle is not a passenger car. It is a work vehicle and not designed for use on roadways.

The vehicle has special tires, a center twisting assembly, and other features that give it extra traction. These features add to the versatility of the vehicle. You must keep in mind that the vehicle is not a recreation vehicle. It is not an all terrain vehicle. And, it is definitely not meant for "stunt driving" or "horsing around." It is a work vehicle, not a play vehicle. Children should not be allowed to operate the vehicle. Anyone who operates the vehicle should have a motor vehicle license.

If you are not experienced at driving the vehicle, practice driving it in a safe area away from other people. Be sure you are familiar with all the vehicle's controls, particularly those used for braking, steering and transmission shifting. Learn how your vehicle handles on different surfaces. Your operating skills will improve with experience, but as in operating any vehicle, take it easy as you begin. Be sure you know how to stop quickly in an emergency. If you need help, ask your supervisor for assistance.

Many factors contribute to accidents. You have control over several of the most important. Your actions, such as driving too fast for conditions, braking too fast, turning too sharp, and combinations of these, are frequent cause of accidents.

One of the major causes of accidents is fatigue. Be sure to take occasional breaks. It is very important that you stay alert at all times.

Never operate the vehicle, or any equipment, if you are under the influence of alcohol or other drugs. Even prescription drugs and cold medicines can cause drowsiness. Read the label on the medicine or check with your doctor or pharmacist if you are unsure about a certain medication.

Drive slow in unfamiliar areas. Tree branches, fences, wires, other vehicles, tree stumps, ditches, sand traps, streams, and other things found in most parks and golf courses can be hazardous to the operator and passenger.

Avoid driving when it is dark, especially in unfamiliar areas. If you must drive when it is dark, be sure to drive cautiously, use the head lights, and even consider adding additional lights.

Passengers

Whenever you have a passenger riding in the vehicle make sure he or she is holding on securely. Drive slower and turn less sharply because your passenger does not know what you are going to do next and may not be prepared for turning, stopping, accelerating, and bumps.

You and your passenger should remain seated at all times, keeping arms and legs inside the vehicle. The operator should keep both hands on steering wheel, whenever possible and passenger should use hand holds provided.

There should never be passengers in the cargo box. The vehicle is meant to have one driver and only one passenger—no more.

Speed

Speed is one of the most important variables leading to accidents. Driving too fast for the conditions can cause you to lose control and have an accident. Speed can also make a minor accident worse. Driving head-on into a tree at slow speed can cause injury and damage, but, driving into a tree at high speed can destroy the vehicle and kill you and your passenger.

Never drive too fast for the conditions. If there is any doubt about how fast to drive, slow down.

Turning

Turning is another important variable leading to accidents. Turning too sharply for the conditions or speed can cause the vehicle to lose traction and skid, or even tip over.

Wet, sandy and slippery surfaces make turning more difficult and risky. The faster you are going, the worse this situation becomes so, slow down before turning.

Braking

It is good practice to slow down before you get near an obstacle. This gives you extra time to stop or turn away. Hitting an obstacle can damage the vehicle and its contents. More important, it can injure you and your passenger.

Gross vehicle weight has a major impact on your ability to stop and/or turn. Heavier loads and heavier attachments make a vehicle harder to stop or turn. The heavier the load, the longer it takes to stop.

The braking characteristics also change with no bed or attachment on the vehicle. Fast stops may cause the rear wheels to lock up, which may affect the control of the vehicle. It is a good idea to decrease vehicle speed with no bed or attachment.

Turf and pavement are much slipperier when they are wet. It can take 2 to 4 times as long to stop on wet surfaces as on dry surfaces.

If you drive through standing water deep enough to get the brakes wet, they will not work well until they are dry. After driving through water, you should test the brakes to make sure they work properly. If they do not, drive slowly while putting light pressure on the brake pedal. This will dry the brakes out.

Hills

Warning

Operating the vehicle on a hill may cause tipping or rolling of the vehicle, or the engine may stall and you could lose headway on the hill. This could result in personal injury.

- **If engine stalls or you lose headway on a hill, never attempt to turn vehicle around.**
- **Always back straight down a hill in reverse gear.**
- **Never back down a hill using only the brakes.**
- **Never drive across a steep hill; always drive straight up or down or go around the hill.**
- **Avoid turning on a hill.**
- **Do not accelerate quickly or slam on the brakes. Sudden speed change can initiate tipping or rolling of the vehicle.**

Use extra care when on hills. Never go on hills that are extremely steep. Stopping while going down a hill will take longer than on level ground. Turning while going up or down a hill is more dangerous than turning on the level. Turns while going down hill, especially with the brakes on, and, turning up hill while traversing a hill are particularly dangerous.

Slow down before starting up or down a hill. If you have to turn while on a hill, do it as slowly and cautiously as possible. Never make sharp or fast turns on a hill.

If you stall or begin to lose headway while climbing a **steep** hill, quickly apply the brakes, shift to reverse, and restart the engine.

Reduce the weight of the load if it is a steep hill or if the load has high center of gravity. Remember, loads can shift. Secure them.

Operating on Rough Terrain

Use extra caution when operating on rough terrain, uneven ground, and near curbs. Loads may shift, causing the vehicle to become unstable.

Warning

Sudden changes in terrain may cause abrupt steering wheel movement, possibly resulting in hand and arm injuries.

- **Reduce your speed when operating on rough terrain and near curbs.**
- **Grip the steering wheel around the perimeter. Keep your hands clear of the steering wheel spokes.**

Loading and Dumping

The weight and position of the cargo and passenger can change the vehicle center of gravity and vehicle handling. To avoid loss of control resulting in personal injury, follow these guidelines.

Do not carry loads which exceed the load limits described on the vehicle weight label.

Warning

The weight of the box may be heavy and could crush hands or other body parts.

- **Keep hands and other body parts clear when lowering the box.**
- **Do not dump materials on people or animals.**

Loads vary in how they are distributed. Sand spreads out evenly and quite low. Other items, such as bricks, fertilizer or landscape timbers, stack higher in the box.

The height and weight of the load has a significant influence on tip overs. The higher a load is stacked, the more likely the vehicle is to tip over. Reducing the total weight is one way to reduce the risk of a tip over. Distributing the load as low as possible is another way to reduce the risk of a tip over.

If the load is positioned toward one of the sides, it will make the vehicle much more likely to tip over on that side. This is especially true when turning if the load is on the outside of the turn.

Never position heavy loads behind the rear axle. If the load is positioned so far to the rear that it is behind the rear axle, it will reduce the weight on the front wheels and this will reduce steering traction. With the load all the way to the back, the front wheels can even come off of the

ground when going over bumps or up a hill. This will result in a loss of steering and may lead to the vehicle tipping over.

As a general rule, position the weight of the load evenly from front to rear and evenly from side to side.

If a load is not secured, or you are transporting a liquid in a large container such as a sprayer, it can shift. This shifting happens most often while turning, going up or down hills, suddenly changing speeds or while driving over rough surfaces. Shifting loads can lead to tip overs. Always secure loads so that they do not shift. Never dump the load while the vehicle is sideways on the hill.

Heavy loads increase stopping distance and reduce your ability to turn quickly without tipping over.

The rear cargo space is intended for load carrying purposes only, not for passengers.

Transporting the Vehicle

For moving the vehicle long distances, a trailer should be used. Make sure the vehicle is secured to the trailer. Refer to Figures 21 and 22 for location of tie down points.

Caution

Loose seats may fall off of the vehicle and trailer when transporting and land on another vehicle or become an obstruction on the road.

Remove the seats or secure them with a strap or bungee cord.

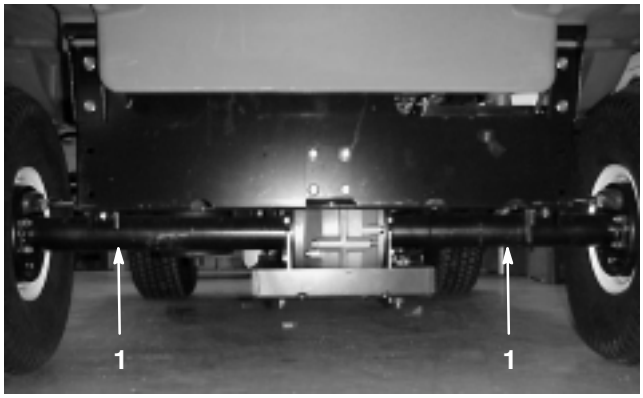

Figure 21

1. Tie down points

Towing the Vehicle

In case of emergency, the vehicle can be towed for a short distance. However, Toro does not recommend this as a standard procedure.

Warning

Towing at excessive speeds could cause the vehicle to lose steering control, resulting in personal injury.

Never tow vehicle faster than 5 mph.

Towing the vehicle is a two person job. If machine must be moved a considerable distance, transport it on a truck or trailer; refer to Transporting Vehicle, page 19.

1. Remove the drive belt; refer to Replacing Drive Belt, page 27, steps 1 and 2.
2. Affix a tow line to tongue on front frame member (Fig. 22).
3. Put vehicle in neutral (see Neutral Lock Assembly, page 23) and release parking brake.

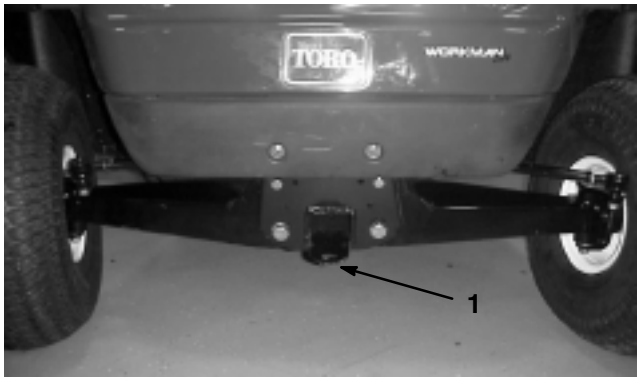

Figure 22

1. Towing tongue and tie down point

Towing a Trailer

The Workman 2100 is capable of pulling trailers. Two types of tow hitches are available for the Workman, depending on your application. Contact your Authorized Toro Distributor for details.

When equipped with the standard tow hitch, the vehicle can tow trailers with a Gross Trailer Weight (GTW) of 400 lbs. and a tongue weight of 50 lbs. When equipped with the optional heavy-duty tow hitch, the vehicle can tow trailers with a GTW of 800 lbs. and a tongue weight of 100 lbs. Always load a trailer with 60% of the cargo

weight in the front of the trailer. This places approximately 10% of the GTW on the tow hitch of the vehicle.

When hauling cargo or towing a trailer, do not overload your vehicle or trailer. Overloading can cause poor performance or damage to the brakes, axle, engine, transaxle, steering, suspension, body structure or tires. The maximum combined Gross Vehicle Weight shall not exceed 2650 lbs.

Reduce your speed and allow extra distance for braking when towing a trailer.

Maintenance

Note: Determine the left and right sides of the machine from the normal operating position.

Recommended Maintenance Schedule

Maintenance Service Interval	Maintenance Procedure
After first 8 hours	• Change the engine oil.
Every 8 hours	• Check the engine oil.
Every 50 hours	• Check the battery fluid level. • Check the battery cable connections. • Change the engine oil (includes synthetic oil).[1]
Every 100 hours	• Lubricate all grease fittings. • Clean the engine rotating screen.[2] • Inspect the air cleaner filter.[2] • Replace the engine oil filter. • Inspect the brake and parking brake. • Inspect the condition and wear of the tires. • Torque the wheel lug nuts. • Check the front suspension adjustment.
Every 200 hours	• Replace the air cleaner filter. • Check the brake cable adjustments. • Inspect the drive belt. • Adjust the starter generator belt.
Every 400 hours or yearly	• Inspect the fuel lines. • Check the front wheel toe-in.
Every 800 hours or yearly	• Replace the fuel filter. • Change the transaxle oil. • Replace the spark plugs. • Drain and flush the fuel tank.

[1]More often when operating under heavy load or high temperatures

[2]More often in dusty, dirty conditions

Important Refer to your engine operator's manual for additional maintenance procedures.

Daily Maintenance Checklist

Duplicate this page for routine use.

Maintenance Check Item	For the week of:						
	Mon.	Tues.	Wed.	Thurs.	Fri.	Sat.	Sun.
Check the brake and parking brake operation.							
Check the gear shift operation.							
Check the fuel level.							
Check the engine oil level.							
Check the transaxle oil level.							
Inspect the air filter.							
Inspect the engine cooling fins.							
Check any unusual engine noises.							
Check any unusual operating noises.							
Check the tire pressure.							
Check for fluid leaks.							
Check the instrument operation.							
Check the accelerator operation.							
Lubricate all grease fittings.[1]							
Touch up and damaged paint.							

[1] Immediately after **every** washing, regardless of the interval listed

Notation for Areas of Concern

Inspection performed by:		
Item	**Date**	**Information**
1		
2		
3		
4		
5		
6		
7		
8		
9		
10		
11		
12		
13		
14		

Caution

If you leave the key in the ignition switch, someone could accidently start the engine and seriously injure you or other bystanders.

Remove the key from the ignition and disconnect the wire(s) from the spark plug(s) before you do any maintenance. Set the wire(s) aside so that it does not accidentally contact the spark plug(s).

Warning

The bed must be raised to perform some routine maintenance. The bed could fall and injure persons that are underneath it.

- **Always use prop rod to hold bed up before working under raised bed.**
- **Remove any load material from bed before working under raised bed.**

Adjusting Ground Speed

Ground speed is preset at the factory and should not need adjusting. If you think the ground speed needs adjusting, contact your local Authorized Toro Service Dealer.

Heavy Duty Operation

Important If vehicle is subjected to conditions listed below, maintenance should be performed twice as frequently.

- Desert operation
- Cold climate operation (below 32 degrees F)
- Trailer towing
- Frequent operation on dusty roads
- Construction work
- After extended operation in mud, sand, water, or similar dirty conditions, have your brakes inspected and cleaned as soon as possible. This will prevent any abrasive material from causing excessive wear.
- Under frequent heavy duty operating conditions, lubricate all grease fittings and inspect air cleaner daily to prevent excessive wear.

Jacking the Vehicle

Whenever the engine is run for routine maintenance and/or engine diagnostics, the rear wheels of the vehicle should be 1″ (25 mm) off the ground with the rear axle supported on jack stands.

Danger

A vehicle on a jack may be unstable and slip off of the jack, injuring anyone beneath it.

- **Do not start the engine while the vehicle is on a jack.**
- **Always remove the key from the ignition before getting off of the vehicle.**
- **Block the tires when the vehicle is on a jack.**

The jacking point at the front of the vehicle is on the front of the frame behind the towing tongue (Fig. 23) The jacking point at the rear of the vehicle is under the axle tubes (Fig. 24).

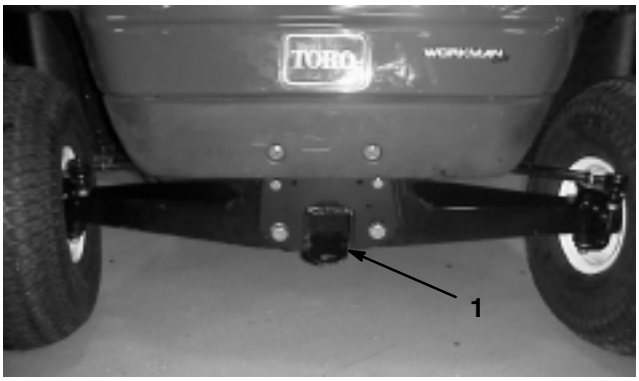

Figure 23

1. Front jacking point

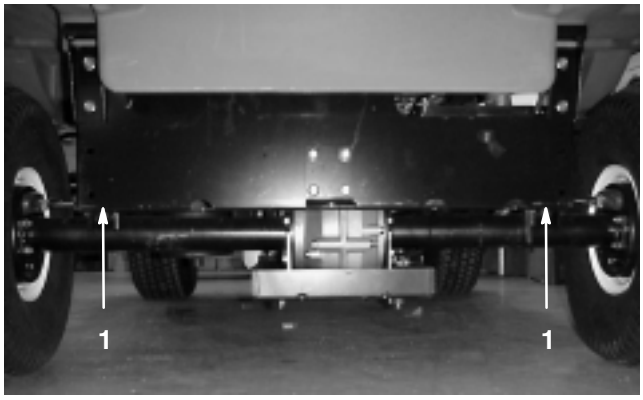

Figure 24

1. Rear jacking points

Neutral Lock Assembly

When performing routine maintenance and/or engine diagnostics, the transaxle must be shifted into a neutral position. The vehicle does not have a neutral position on the shift lever. The following 3 steps must be performed to put the vehicle in neutral:

1. To lock the transaxle in neutral, rotate the locking pin 180 degrees on the shift block (Fig. 25).

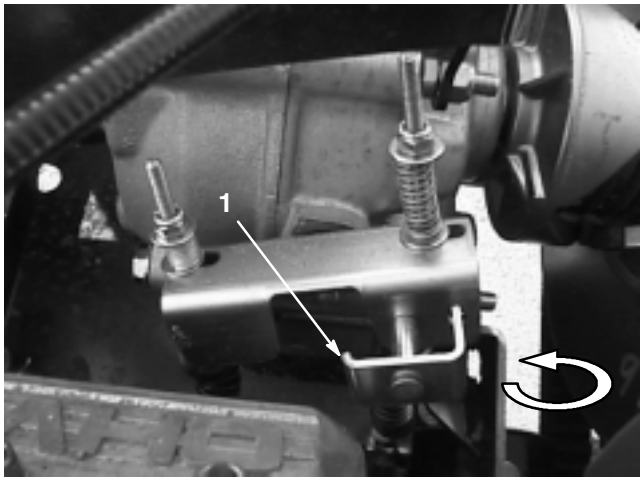

Figure 25

1. Locking pin

2. Shift the gear selector into REVERSE and then into FORWARD. Leave the gear shift selector in the FORWARD position.
3. Ensure that the transaxle is locked in neutral by rotating the secondary clutch (Fig. 26). The tires should not rotate. If tire rotation does occur, repeat step 2 until the tires no longer rotate.

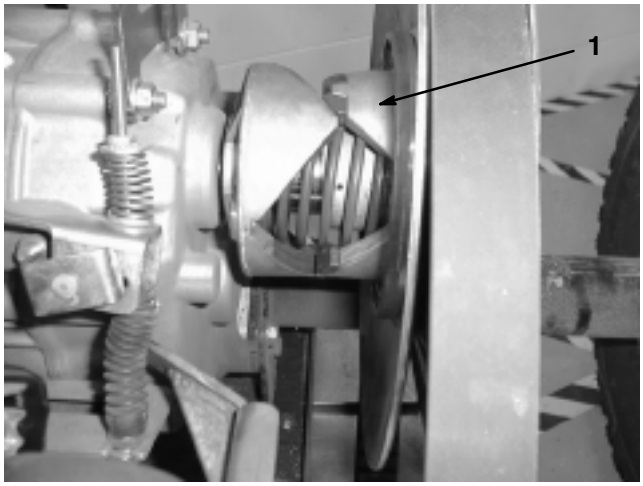

Figure 26

1. Secondary clutch

Engine Oil

Service Interval/Specification

Check the oil level before each use.

Change oil:

- After the first 8 operating hours.
- After every 50 operating hours.

Replace the oil filter every 100 hours.

Note: Change oil and oil filter more frequently when operating conditions are extremely dusty or sandy.

Oil Type: Detergent oil (API service SF, SG, SH, SJ, or higher)

Crankcase Capacity: 48 oz./1-1/2 qt. (1.4 liters) when filter is changed

Viscosity: See table below

USE THESE SAE VISCOSITY OILS

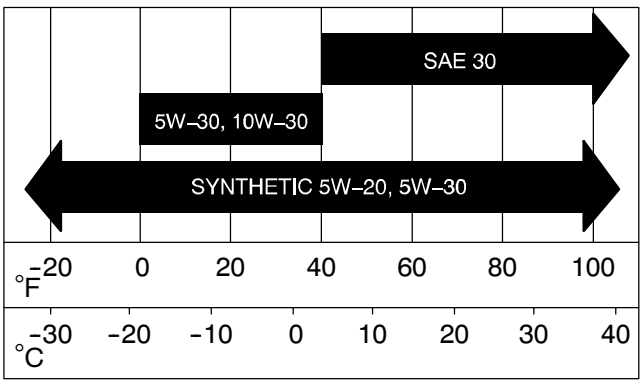

Checking Oil Level

To check the oil level, refer to Check the Crankcase Oil, page 12.

Changing/Draining Oil

1. Start the vehicle and let it run for a few minutes to warm the oil.
2. Park the machine on a level surface, set the parking brake, turn the ignition off, and remove the key.
3. Raise the bed and secure it with the prop rod.
4. Disconnect the spark plug wires and battery cables.
5. Remove the drain plug (Fig. 27) and let the oil flow into the drain pan. When the oil stops, reinstall the drain plug.

Note: Dispose of the used oil at a certified recycling center.

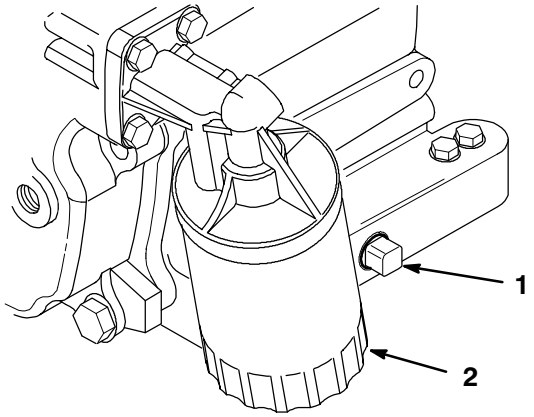

Figure 27

1. Engine oil drain plug
2. Engine oil filter

6. Pour oil into fill opening until the oil level is up to the "FULL" mark on the dipstick. Add the oil slowly and check the level often during this process. **Do not overfill.**
7. Reinstall the oil fill cap and dipstick firmly in place.

Change Oil Filter—Service Interval/Specification

Replace the oil filter every 100 operating hours or yearly, whichever occurs first.

1. Drain the oil from the engine; refer to Changing/Draining Oil, page 24.
2. Remove the existing oil filter (Fig. 27). Apply a light coat of clean oil to the new filter gasket.
3. Screw filter on until gasket contacts mounting plate, then tighten filter an additional 1/2 to 3/4 turn further. **Do not overtighten.**
4. Fill the crankcase with the proper type of new oil; refer to Engine Oil, page 23.
5. Start and run the engine to check for leaks.
6. Stop the engine and recheck the oil level. Add oil if necessary.

Removing Debris From Engine

Every 100 hours of operation (more often under extremely dusty, dirty conditions) clean the rotating screen and external surfaces as necessary.

Important Operating the engine with a blocked rotating screen, dirty or plugged cooling fins or cooling shrouds removed, will cause engine damage due to overheating.

Important Never clean the engine with pressurized water because water could contaminate the fuel system.

Air Cleaner

Service Interval/Specification

Check the air cleaner body for damage which could possibly cause an air leak. Replace a damaged air cleaner body.

Ensure the cover is sealing around the air cleaner body.

Air Cleaner Filter: Inspect after every 100 operating hours; replace after every 200 hours or sooner if dirty or damaged.

Note: Service the air cleaner more frequently (every few hours) if operating conditions are extremely dusty or sandy.

Removing the Filter Element

1. Park the machine on a level surface and turn the engine off.
2. Raise bed and secure with prop rod.

3. Release latches securing air cleaner cover to air cleaner body. Separate cover from body. Clean inside of air cleaner cover (Fig. 28).

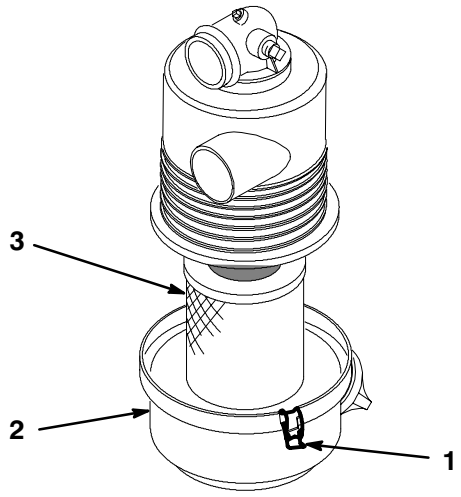

Figure 28

1. Air cleaner latches
2. Cover
3. Filter

4. Gently slide filter out of air cleaner body to reduce the amount of dust dislodged (Fig. 28). Avoid knocking filter against air cleaner body.

5. Inspect filter and discard if damaged.

Cleaning the Filter Element

Important Do not wash or reuse a damaged filter.

1. Washing method:

   A. Prepare a solution of filter cleaner and water and soak filter element about 15 minutes. Refer to directions of filter cleaner carton for complete information.

   B. After soaking filter for 15 minutes, rinse it with clear water. Rinse filter from clean side to dirty side.

Important To prevent damage to the filter element, maximum water pressure must not exceed 40 psi.

   C. Dry filter element using warm, flowing air (160 degrees F max.), or allow element to air-dry.

Important Do not use a light bulb to dry the filter element because damage could result.

2. Compressed air method:

   A. Blow compressed air from inside to the outside of dry filter element. Keep air hose nozzle at least 2 inches from filter and move nozzle up and down while rotating the filter element.

Important To prevent damage to the filter element, do not exceed 100 psi air pressure.

   B. Inspect for holes and tears by looking through the filter toward a bright light.

Installing the Filter Element

Important To prevent engine damage, always operate the engine with the complete air cleaner assembly installed.

1. Inspect new filter for shipping damage. Check sealing end of filter.

Important Do not install a damaged filter.

2. Insert new filter properly into air cleaner body. Ensure filter is sealed properly by applying pressure to outer rim of filter when installing. Do not press on the flexible center of the filter.

3. Reinstall cover and secure latches.

Greasing and Lubrication

Service Interval/Specification

Lubricate all bearings and bushings after every 100 hours or once a year, whichever occurs first. Grease more frequently when using for heavy duty vehicle operations.

Grease Type: No. 2 General Purpose Lithium Base Grease

Where to Add Grease

The grease fitting locations are at the tie rod ends (4) (Fig. 29) and the king pins (2) (Fig. 30).

The throttle and brake pedal pivots (2) (Fig. 31) are not greased at the factory and should only be greased when and if the pedals begin to stick.

1. Wipe grease fitting clean so foreign matter cannot be forced into the bearing or bushing.

2. Pump grease into the bearing or bushing.

3. Wipe off excess grease.

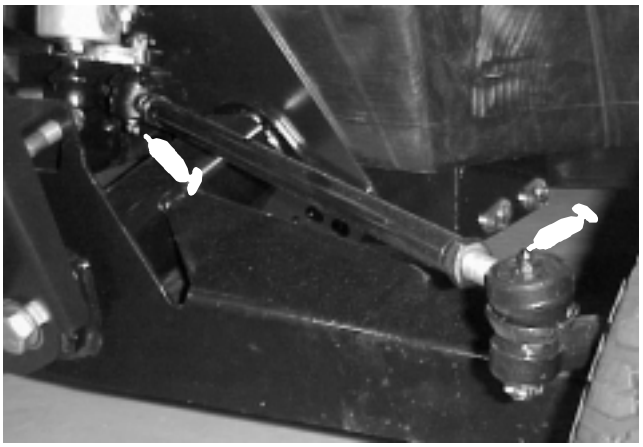

Figure 29



Figure 30

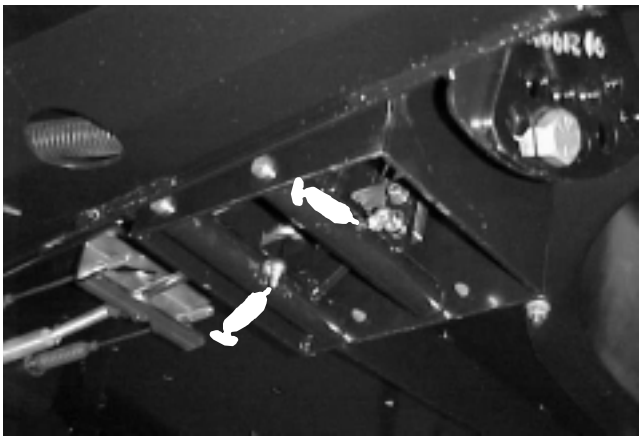

Figure 31

Brakes

Inspecting Brakes

Brakes are a critical safety component of the vehicle. As with all safety components, they should be closely inspected at regular intervals to ensure optimum performance and safety. The following inspections should be done every 100 hours:

- Inspect the brake shoes for wear or damage. If the lining (brake pad) thickness is less than 1/16 in. (1.6 mm), the brake shoes should be replaced.
- Inspect the backing plate and other components for signs of excessive wear or deformation. If any deformation is found, the appropriate components must be replaced.

Adjusting Brake Pedal

Adjust the brake if the parking brake does not hold, brake pedal travel is excessive, or braking power is not sufficient when brake pedal is depressed. Check adjustment every 200 hours.

1. Turn ignition to OFF and remove the key.
2. Raise the vehicle off the ground; see Jacking the Vehicle, page 22.
3. Tighten the cable adjusting screw, located beneath the floor panel, until the cables are snug in the brake equalizer (Fig. 32). Do not overtighten. There should be some free play in the brake pedal before the brake engages.

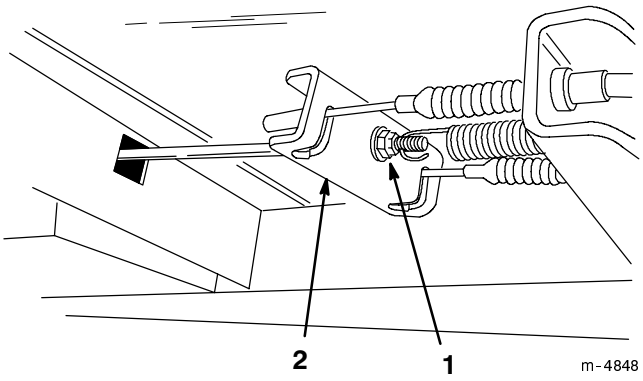

Figure 32

1. Cable adjusting screw
2. Brake equalizer

Inspecting Tires

Check tire condition at least every 100 hours of operation. Operating accidents, such as hitting curbs, can damage a tire or rim and also disrupt wheel alignment, so inspect tire condition after an accident.

Check the wheels to ensure they are mounted securely. Torque the front bolts to 135-165 ft-lb. and the rear lug nuts to 45-65 ft-lb.

Adjusting Front Suspension

The ride height of each side of the vehicle can be adjusted.

1. Jack the front end of the vehicle off the ground; refer to Jacking the Vehicle, page 22.
2. Remove the travel limiting bolt (Fig. 33).
3. Loosen the centering bolts in the front "A" frame (Fig. 33).
4. Remove the ride height adjustment bolt (Fig. 33).
5. Rotate the front "A" frame to desired position (Fig. 33).
6. Replace the ride height adjustment bolt and the travel limiting bolt (Fig. 33).
7. Tighten and torque the centering bolts to 265 ± 25 ft-lbs.
8. Tighten and torque the ride height adjustment bolt to 150 ± 15 ft-lbs.
9. Repeat procedure on opposite side of vehicle.

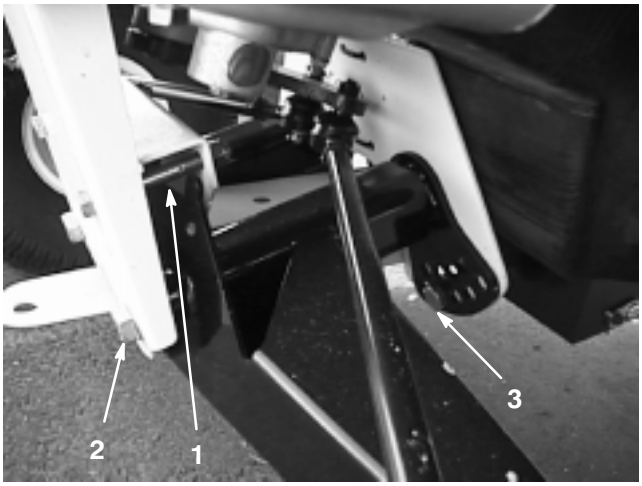

Figure 33

1. Travel limiting bolt
2. Centering bolt
3. Ride height adjustment bolt

Drive Belt

Service Interval/Specification

Check condition and tension of drive belt after first day of operation and every 200 operating hours thereafter.

1. Park the machine on a level surface, set the parking brake, and turn the engine off.
2. Raise bed and secure with prop rod.
3. Put the vehicle in neutral; refer to Neutral Lock Assembly, page 23.
4. Rotate and inspect belt for excessive wear or damage. Replace as necessary.

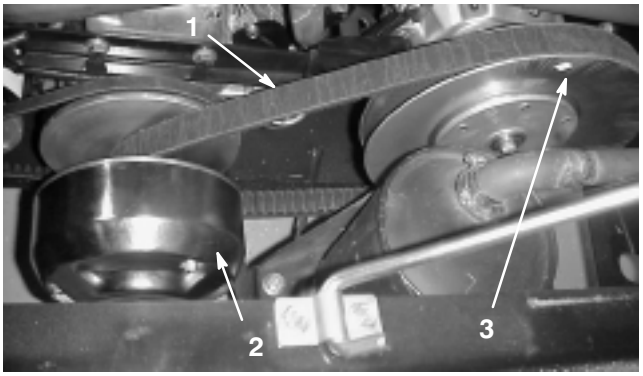

Figure 34

1. Drive belt
2. Primary clutch
3. Secondary clutch

Replacing Drive Belt

1. Rotate and route the belt over the secondary clutch (Fig. 34).
2. Remove the belt from the primary clutch (Fig. 34).
3. To replace the belt, reverse the procedure.

Adjusting Starter Generator Belt

Check the tension of the starter generator belt after the first day of operation and every 200 operating hours thereafter.

1. Park the machine on a level surface, set the parking brake, turn the ignition off, and remove the key.

2. Loosen the starter generator pivot bolt (Fig. 35).

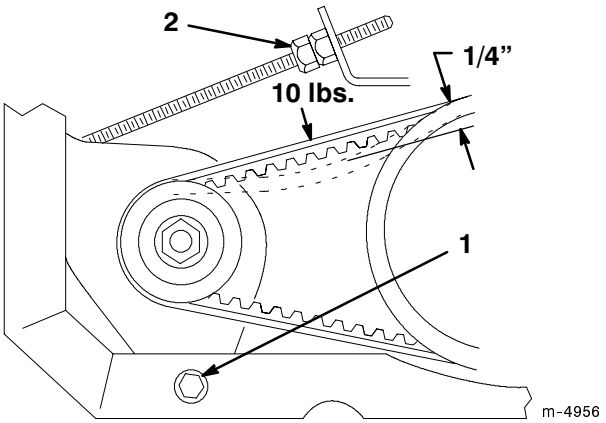

Figure 35

1. Generator pivot bolt 2. Jam nut

3. Adjust the jam nut on the starter rod (Fig. 35) until the belt flexes 1/4″ with 10 lbs. of force.
4. Tighten the starter generator pivot bolt (Fig. 35).

Front Wheel Toe-In

After every 400 operating hours or annually, check front wheel toe-in.

1. Measure the distance between both of the front tires at axle height (at the front and rear of the wheels) (Fig. 36). Front measurement must be equal to the rear measurement ±1/4 in.

Note: The distance from the bottom of the tongue to the ground should be 9 to 9-3/4 inches when the tires are inflated to 12 psi.

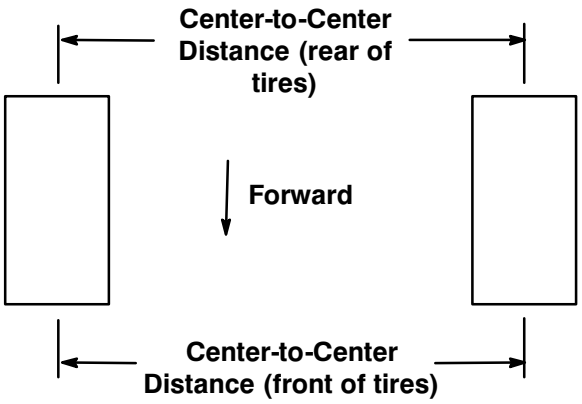

Figure 36

2. To adjust, loosen jam nuts at both ends of tie rods (Fig. 37).
3. Rotate both tie rods to move front of tire inward or outward.

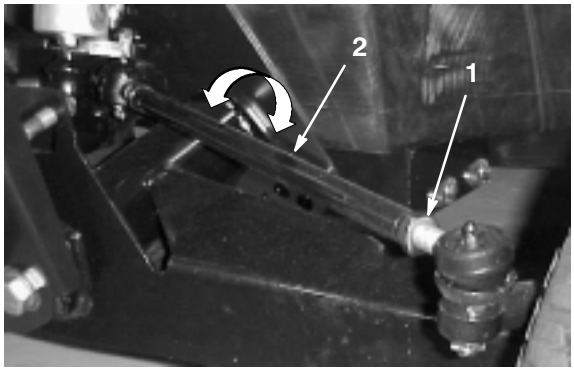

Figure 37

1. Jam nut 2. Tie rod

4. Tighten tie rod jam nuts when adjustment is correct.
5. Ensure there is full travel of the steering in both directions.

Fuel System

Fuel Lines and Connections

Check lines and connections every 400 hours or yearly, whichever occurs first. Inspect for deterioration, damage, or loose connections.

Replacing Fuel Filter

Replace the fuel filter after every 800 operating hours or yearly, whichever occurs first.

1. Raise bed and support with prop rod.
2. Place a clean container under fuel filter.
3. Remove clamps securing fuel filter to fuel lines.

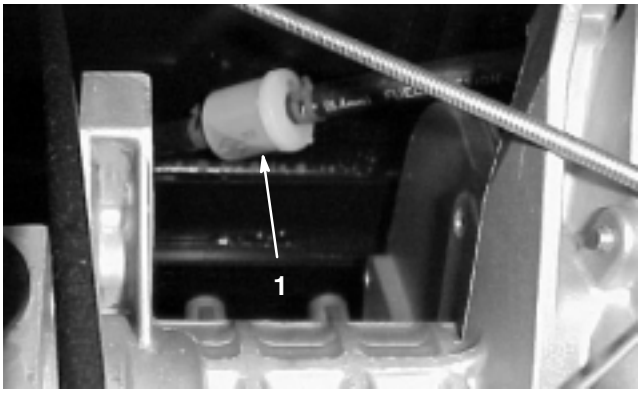

Figure 38

1. Fuel filter

4. Install new fuel filter to fuel lines with clamps previously removed. Filter to be mounted so arrow points toward carburetor.

Spark Plugs

Service Interval/Specification

Replace spark plugs after every 800 operating hours or yearly, whichever occurs first, to assure proper engine performance and reduce exhaust emission level.

Type: Champion RC 12YC (or equivalent)

Air Gap: .030″ (.76 mm)

Note: The spark plug usually lasts a long time; however, the plug should be removed and checked whenever the engine malfunctions.

Replacing the Spark Plug

1. Clean area around spark plugs so foreign matter cannot fall into cylinder when spark plug is removed.
2. Pull spark plug wires off spark plugs and remove plugs from cylinder head.
3. Check condition of side electrode, center electrode, and center electrode insulator to assure there is no damage.

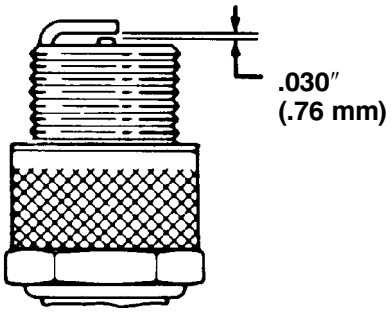

Figure 39

Important A cracked, fouled, dirty or otherwise malfunctioning spark plug must be replaced. Do not sand blast, scrape, or clean electrodes by using a wire brush because grit may eventually release from the plug and fall into the cylinder. The result is usually a damaged engine.

4. Set air gap between center and side of electrodes at .030″. Install correctly gapped spark plug and tighten plug to 18–22 ft-lb. If torque wrench is not used, tighten plug firmly.
5. Install spark plug wires.

Changing Transaxle Fluid

Change transaxle fluid every 800 operating hours or yearly, whichever occurs first.

1. Position the vehicle on a level surface, stop engine, engage the parking brake and remove key from ignition switch.
2. Remove drain plug from right side of reservoir (Fig. 40) and let fluid flow into drain pan. Reinstall and tighten plug when fluid stops draining.

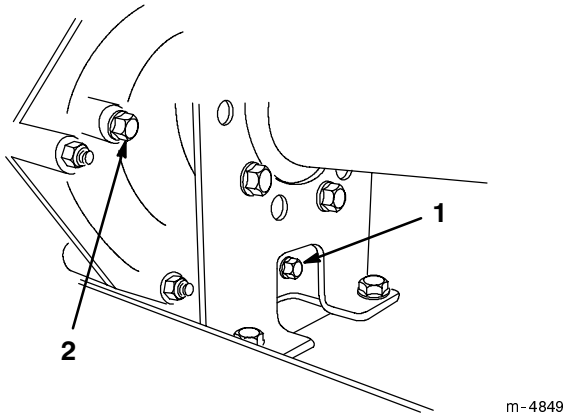

Figure 40

1. Drain plug 2. Level indicator hole

3. Fill the reservoir (Fig. 41) with approximately 1-1/2 qt. (1.4 liters) of 10W30 motor oil or until the oil level is at the bottom of the level indicator hole (Fig. 40).

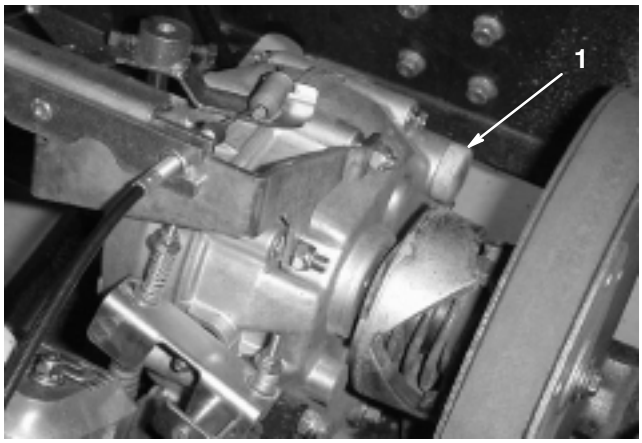

Figure 41

1. Oil fill

4. Start engine and operate to fill system. Recheck oil level and replenish, if required.

Fuse

There are 3 fuses in the machine's electrical system. They are located beneath the bed in a box on the right hand side of the frame (Fig. 42).

Fuses: Ignition System—10 amp.
Lights—10 amp.
Power Point—10 amp. (15 amp. max.)

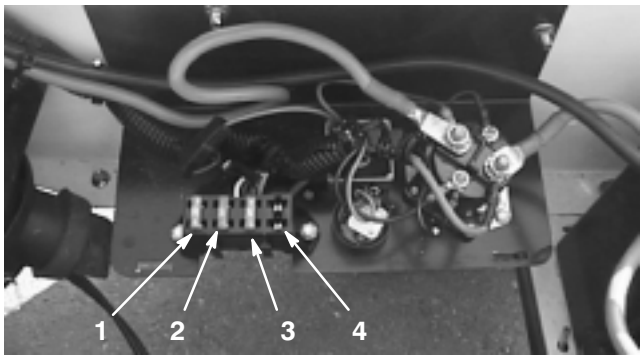

Figure 42

1. Ignition system
2. Lights
3. Power point
4. Open

Headlights

Specification: GE Headlight #H7610

Replacing the Bulb

1. Set the parking brake, turn the ignition off, and remove the key.
2. Reach beneath the dash and push the headlight out of the hood.
3. Remove the screws attaching the wire harness to the headlight.
4. Remove the rubber seal from around the headlight. Discard the headlight.

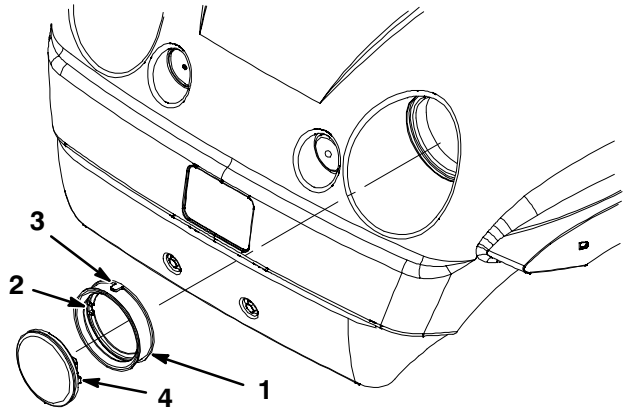

Figure 43

1. Rubber seal
2. Inside notch—align with notch on headlight
3. Outside notch—align with notch in hood
4. Headlight

5. Align the notch on the inside of the seal with the notch on the new headlight. Slide the seal onto the headlight until the seal is firmly in place.
6. Attach the headlight to the wire harness using the previously removed screws.
7. Align the notch on the outside of the seal with the notch in the hood. Push the headlight and seal into the hood until it is firmly in place.

Note: Applying soapy water to the outside of the seal may aid in sliding the seal into the hood.

Battery

Warning

Battery posts, terminals, and related accessories contain lead and lead compounds, chemicals known to the State of California to cause cancer and reproductive harm. ***Wash hands after handling.***

Important Do not jump start the vehicle.

Service Interval/Specification

Always keep the battery clean and fully charged. Use a paper towel to clean the battery and battery box. If the battery terminals are corroded, clean them with a solution of four parts water and one part baking soda. Apply a light coating of grease to the battery terminals to prevent corrosion.

Voltage: 12 volt with 280 cold cranking Amps @ 0 degrees F.

Removing the Battery

1. Position the vehicle on a level surface, stop engine, engage the parking brake and remove key from ignition switch.
2. Raise the bed and secure with the prop rod.
3. Unhook the battery strap.
4. Disconnect the negative (black) ground cable from the battery post.

Warning

Incorrect battery cable routing could damage the tractor and cables causing sparks. Sparks can cause the battery gasses to explode, resulting in personal injury.

- **Always *disconnect* the negative (black) battery cable before disconnecting the positive (red) cable.**
- **Always *reconnect* the positive (red) battery cable before reconnecting the negative (black) cable.**

Warning

Battery terminals or metal tools could short against metal tractor components causing sparks. Sparks can cause the battery gasses to explode, resulting in personal injury.

- **When removing or installing the battery, do not allow the battery terminals to touch any metal parts of the tractor.**
- **Do not allow metal tools to short between the battery terminals and metal parts of the tractor.**
- **Always keep the battery strap in place to protect and secure the battery.**

5. Disconnect the positive (red) cable from the battery post.
6. Remove the battery from the chassis.

Installing the Battery

1. Set the battery on the battery base so the battery posts are toward the rear of the vehicle.
2. Connect the positive (red) cable to the positive (+) battery post and the negative (black) cable to the negative (-) battery post using the bolts and wing nuts. Slide the rubber boot over the positive battery post.
3. Replace the rubber strap to secure the battery to the base.

Checking Electrolyte Level

Check the electrolyte level every 50 operating hours or, if the machine is in storage, every 30 days.

1. Raise the bed and secure with the prop rod.
2. Remove the filler caps. If the electrolyte is not up to the fill line, add the required amount of distilled water; refer to Adding Water to the Battery, page 31.

Danger

Battery electrolyte contains sulfuric acid which is a deadly poison and causes severe burns.

- **Do not drink electrolyte and avoid contact with skin, eyes or clothing. Wear safety glasses to shield your eyes and rubber gloves to protect your hands.**
- **Fill the battery where clean water is always available for flushing the skin.**

Adding Water to the Battery

The best time to add distilled water to the battery is just before you operate the machine. This lets the water mix thoroughly with the electrolyte solution.

1. Clean the top of the battery with a paper towel.
2. Remove the filler caps from the battery and slowly fill each cell with distilled water until the level is up to the fill line. Replace the filler caps.

Important Do not overfill the battery. Electrolyte will overflow onto other parts of the vehicle and severe corrosion and deterioration will result.

Charging the Battery

Important Always keep the battery fully charged (1.260 specific gravity). This is especially important to prevent battery damage when the temperature is below 32°F (0°C).

1. Remove the battery from the chassis; refer to Removing the Battery, page 31.
2. Connect a 3 to 4 amp battery charger to the battery posts. Charge the battery at a rate of 3 to 4 amperes for 4 to 8 hours (12 volts). Do not overcharge the battery.

Warning

Charging the battery produces gasses that can explode.

Never smoke near the battery and keep sparks and flames away from battery.

3. Install the battery in the chassis; refer to Installing the Battery, page 31.

Storing the Battery

If the machine will be stored for more than 30 days, remove the battery and charge it fully. Either store it on the shelf or on the machine. Leave the cables disconnected if it is stored on the machine. Store the battery in a cool atmosphere to avoid quick deterioration of the charge in the battery. To prevent the battery from freezing, make sure it is fully charged.

Washing the Vehicle

The vehicle should be washed as needed. Use water alone or with a mild detergent. A rag may be used, however the hood will loose some of its luster.

Important Pressurized water is not recommended when washing the machine. It may damage the electrical system or wash away necessary grease at friction points. Avoid excessive use of water, especially near the control panel, engine, and battery.

Electrical Schematic

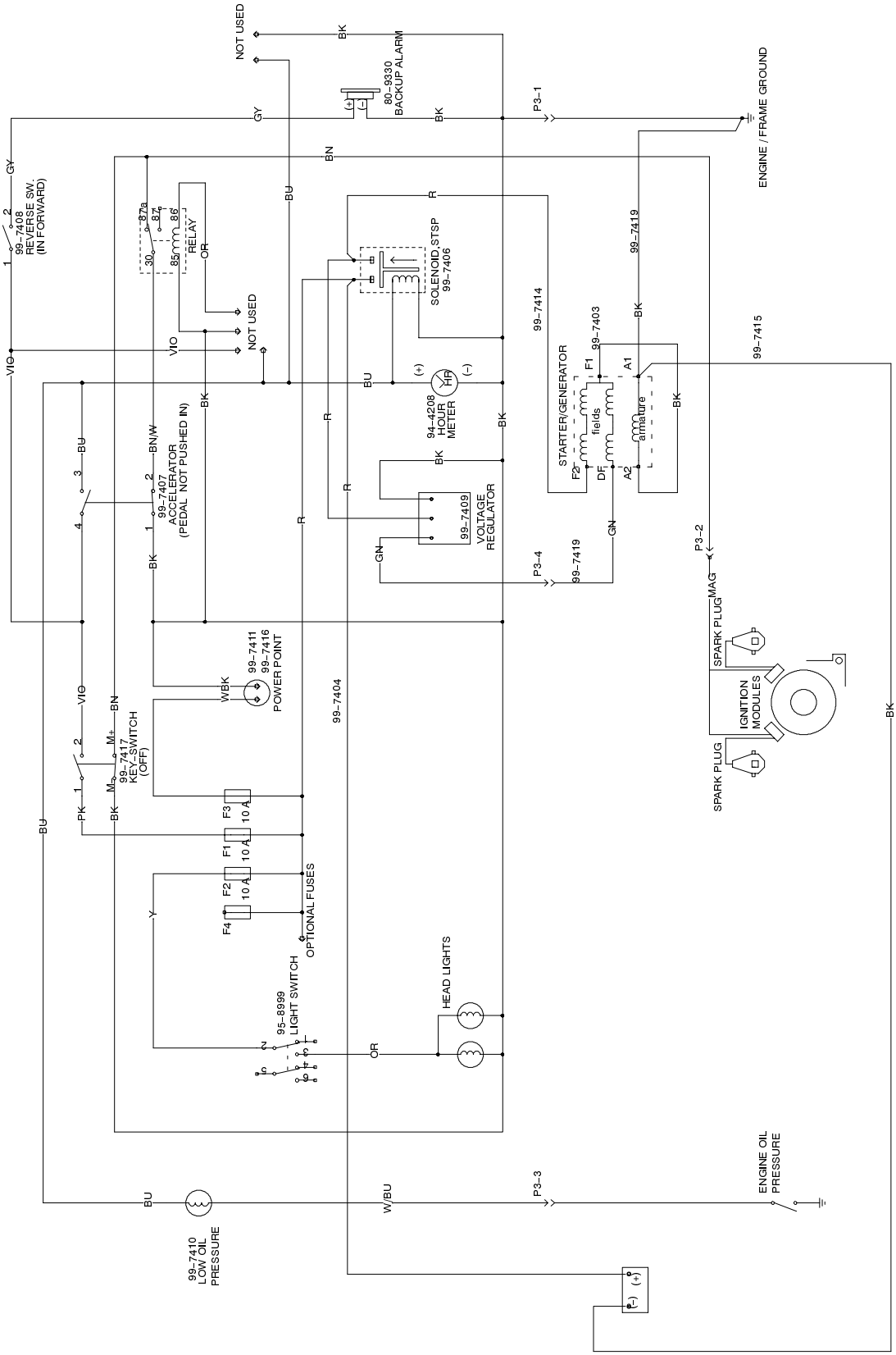

The Toro General Commercial Products Warranty

A Two-Year Limited Warranty

Conditions and Products Covered

The Toro Company and its affiliate, Toro Warranty Company, pursuant to an agreement between them, jointly warrant your 1996 or newer Toro Commercial Product ("Product") purchased after January 1, 1997, to be free from defects in materials or workmanship for two years or 1500 operational hours*, whichever occurs first. Where a warrantable condition exists, we will repair the Product at no cost to you including diagnosis, labor, parts, and transportation. This warranty begins on the date the Product is delivered to the original retail purchaser.

* Product equipped with hour meter

Instructions for Obtaining Warranty Service

You are responsible for notifying the Commercial Products Distributor or Authorized Commercial Products Dealer from whom you purchased the Product as soon as you believe a warrantable condition exists.

If you need help locating a Commercial Products Distributor or Authorized Dealer, or if you have questions regarding your warranty rights or responsibilities, you may contact us at:

Toro Commercial Products Service Department
Toro Warranty Company
8111 Lyndale Avenue South
Bloomington, MN 55420-1196
952-888-8801 or 800-982-2740
E-mail: commercial.service@toro.com

Owner Responsibilities

As the Product owner, you are responsible for required maintenance and adjustments stated in your operator's manual. Failure to perform required maintenance and adjustments can be grounds for disallowing a warranty claim.

Items and Conditions Not Covered

Not all product failures or malfunctions that occur during the warranty period are defects in materials or workmanship. This express warranty does not cover the following:

- Product failures which result from the use of non-Toro replacement parts, or from installation and use of add-on, modified, or unapproved accessories
- Product failures which result from failure to perform required maintenance and/or adjustments
- Product failures which result from operating the Product in an abusive, negligent or reckless manner
- Parts subject to consumption through use unless found to be defective. Examples of parts which are consumed, or used up, during normal Product operation include, but are not limited to, blades, reels, bedknives, tines, spark plugs, castor wheels, tires, filters, belts, etc.
- Failures caused by outside influence. Items considered to be outside influence include, but are not limited to, weather, storage practices, contamination, use of unapproved coolants, lubricants, additives, or chemicals, etc.
- Normal "wear and tear" items. Normal "wear and tear" includes, but is not limited to, damage to seats due to wear or abrasion, worn painted surfaces, scratched decals or windows, etc.

Parts

Parts scheduled for replacement as required maintenance are warranted for the period of time up to the scheduled replacement time for that part.

Parts replaced under this warranty become the property of Toro. Toro will make the final decision whether to repair any existing part or assembly or replace it. Toro may use factory remanufactured parts rather than new parts for some warranty repairs.

General Conditions

Repair by an Authorized Toro Distributor or Dealer is your sole remedy under this warranty.

Neither The Toro Company nor Toro Warranty Company is liable for indirect, incidental or consequential damages in connection with the use of the Toro Products covered by this warranty, including any cost or expense of providing substitute equipment or service during reasonable periods of malfunction or non-use pending completion of repairs under this warranty. Except for the Emissions warranty referenced below, if applicable, there is no other express warranty. All implied warranties of merchantability and fitness for use are limited to the duration of this express warranty.

Some states do not allow exclusions of incidental or consequential damages, or limitations on how long an implied warranty lasts, so the above exclusions and limitations may not apply to you.

This warranty gives you specific legal rights, and you may also have other rights which vary from state to state.

Note regarding engine warranty: The Emissions Control System on your Product may be covered by a separate warranty meeting requirements established by the U.S. Environmental Protection Agency (EPA) and/or the California Air Resources Board (CARB). The hour limitations set forth above do not apply to the Emissions Control System Warranty. Refer to the Engine Emission Control Warranty Statement printed in your operator's manual or contained in the engine manufacturer's documentation for details.

Countries Other than the United States or Canada

Customers who have purchased Toro products exported from the United States or Canada should contact their Toro Distributor (Dealer) to obtain guarantee policies for your country, province, or state. If for any reason you are dissatisfied with your Distributor's service or have difficulty obtaining guarantee information, contact the Toro importer. If all other remedies fail, you may contact us at Toro Warranty Company.

Part No. 374-0031 Rev. -