Form No. 3440-970 Rev B

TORO®

Count on it.

Parts Catalog

60V 21in Super Recycler®

Lawn Mower

Model No. 21388T—Serial No. 400000000 and Up

Register at www.Toro.com.
Original Instructions (EN)

3440-970 B

Ordering Replacement Parts

To order replacement parts, please supply the part number, the quantity, and the description of each part desired.

Understanding Reference Numbers

Each identified part in an illustration has a reference number. The reference number for a part also appears in the parts list, along with other information about the part.

This catalog uses two special reference number formats, one to indicate parts in a service assembly and another to indicate the quantity of a given part in an illustration.

Service Assembly Reference Numbers

Parts in service assemblies have reference numbers in the form a:b. The a represents the reference number of the entire service assembly and the b represents a sequential number unique to each part within the service assembly.

For example, a wheel assembly might be identified by reference number 6, the tire by 6:1, the valve by 6:2, and the wheel by 6:3. When you order the assembly identified by reference number 6, you receive all parts identified by reference numbers 6:1,6:2, and 6:3. However, you may also order any part individually. Reference numbers of this type appear in illustration and in parts lists.

Reference Numbers Indicating Quantity

In an illustration, if a reference number indicates more than one part, the reference number has the form nX y. The n represents the quantity of the part, the X is the multiplication symbol, and the y represents the reference number.

For example, in an illustration, the reference number 2X 37 means that two of the parts identified by reference number 37 are indicated.

Contents

Housing Assembly 4
Rear Door and Mulch Plug Assembly 6
Rear Bag Assembly 8
Motor Module and Blade Assembly 10
Motor Module Assembly No. 140-4203 12
Motor Module Assembly No. 140-4203 Hood and Upper Shroud Assembly 14
Front Wheel and Height-of-Cut Assembly 16
Transmission and Rear Wheel Height-of-Cut Assembly 18
Handle Assembly 20
Electric Starter Assembly 22
Attachments and Accessories 24

© 2021—The Toro® Company
8111 Lyndale Avenue South
Bloomington, MN 55420

Contact us at www.Toro.com.
Printed in the USA.
All Rights Reserved

Housing Assembly

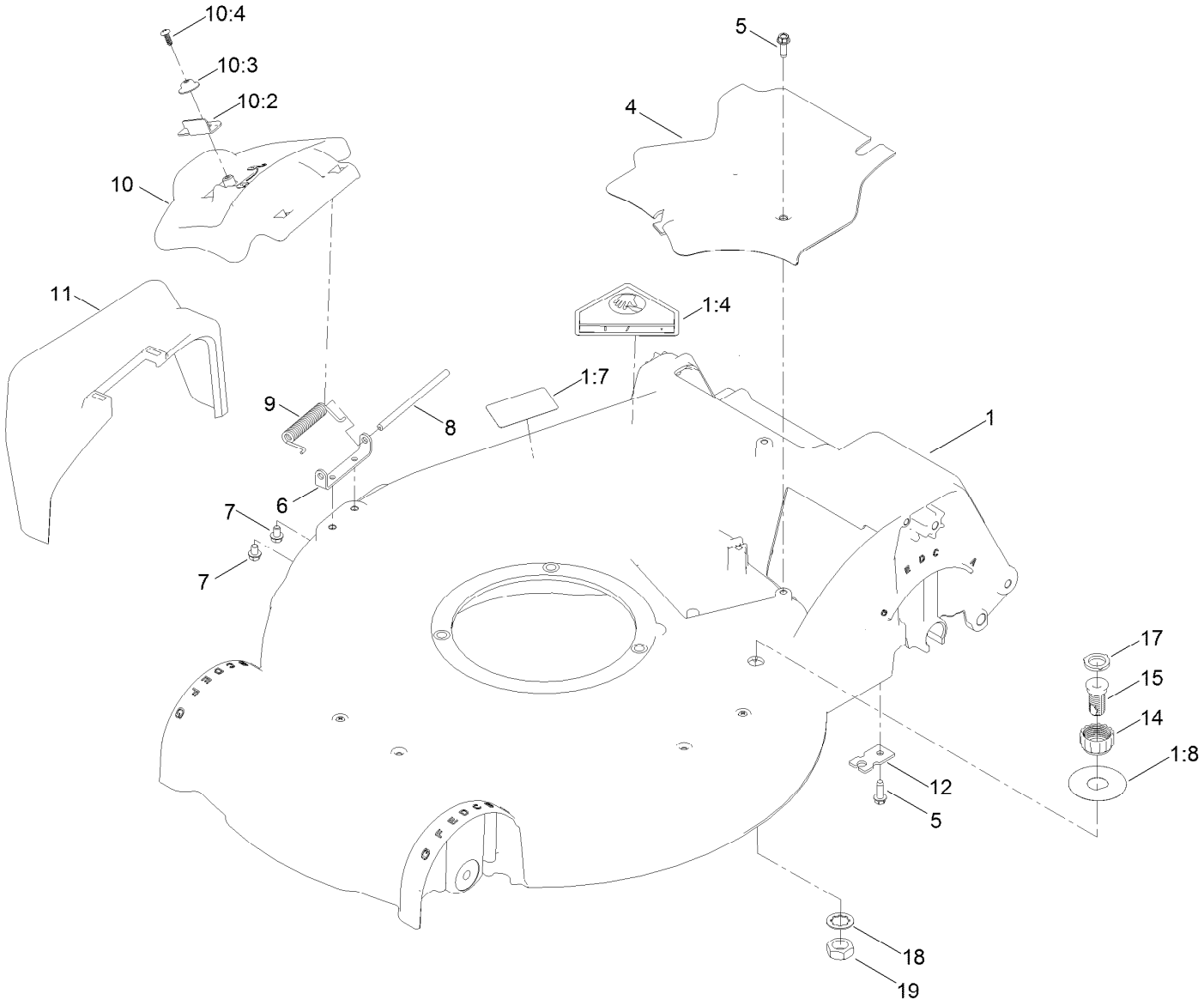

Housing Assembly (continued)

Ref.	Part Number	Qty.	Description
1	140-3768	1	Housing ASM
1:4	94-8072	1	Decal-Danger
1:7	125-5092	1	Decal-Placement, Foot
1:8	137-9196	1	Decal-Quick Wash
4	107-7494	1	Cover-Belt
5	49-2040	2	Screw-HWHTF
6	112-6416	1	Bracket-Cover
7	137-4795	2	Screw
8	99-5291	1	Rod-Cover
9	99-5293	1	Spring-Torsion
10	107-3717	1	Discharge Door ASM
10:2	138-3221	1	Latch-Door
10:3	138-3242	1	Cap-Door
10:4	137-9137	1	Screw-PPH
11	108-3753	1	Chute-Discharge, Side
12	138-3224	1	Bracket-Cable, Traction
14	112-6401	1	Coupling-Hose, Washout Port
15	112-6400	1	Port-Washout
17	112-6438	1	Washer-Seal, Washout Port
18	3254-5	1	Washer-Lock
19	3218-6	1	Nut-Jam

Rear Door and Mulch Plug Assembly

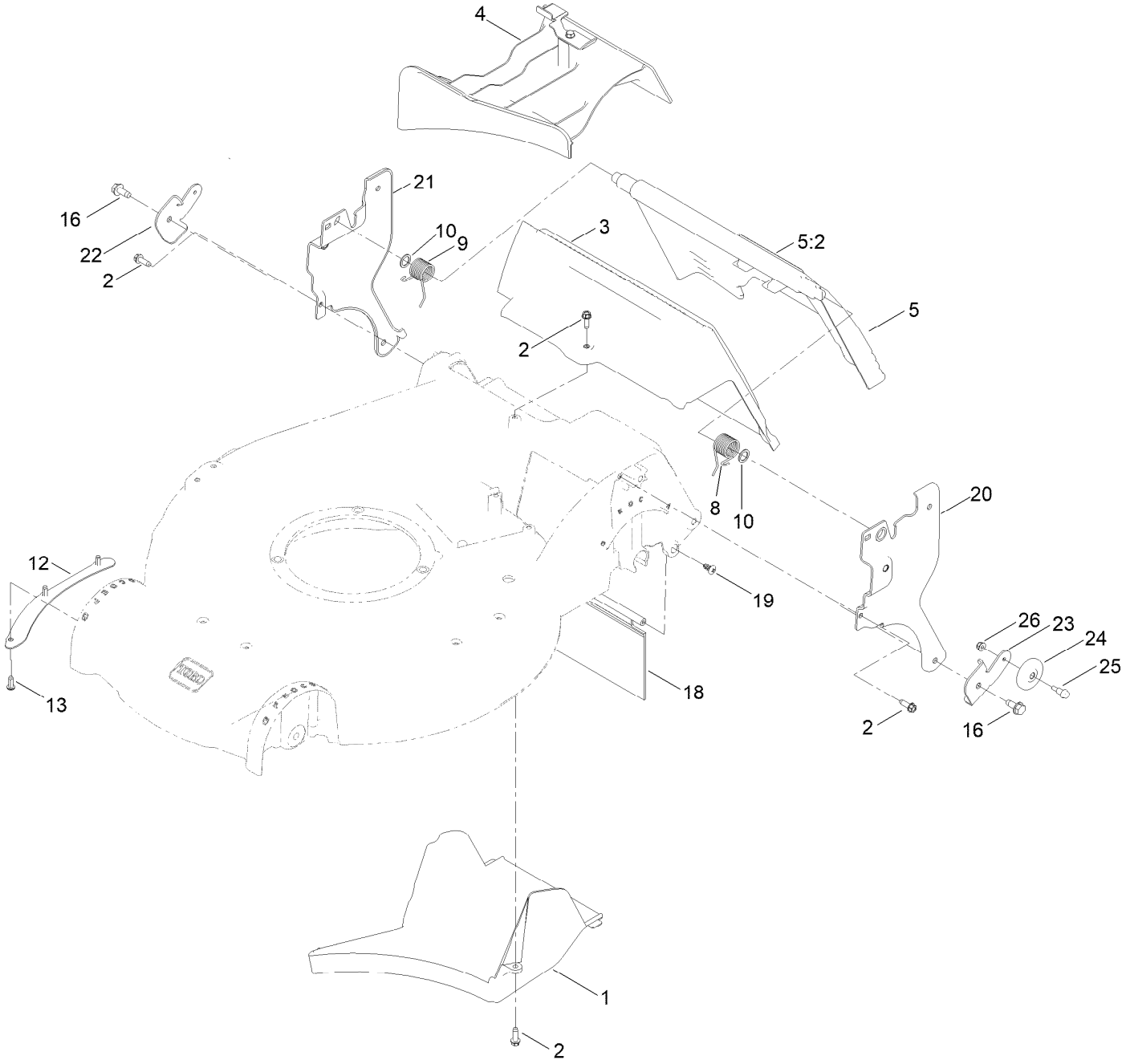

Rear Door and Mulch Plug Assembly (continued)

Ref.	Part Number	Qty.	Description
1	107-7495	1	Tunnel-Discharge
2	49-2040	5	Screw-HWHTF
3	114-2668	1	Chute
4	115-8413	1	Mulch Plug ASM
5	144-6372	1	ASM-Door Rear
5:2	144-6368	1	Decal-Warning
8	115-2859	1	Spring-Torsion
9	114-7924	1	Spring-Torsion
10	94-8196	2	Washer-Nylon
12	105-1316-01	1	Lip-Housing
13	63-8590	3	Screw
16	32144-70	2	Screw-HWHTF
18	120-7011	1	Shield-Trailing
19	117-1092	2	Screw-PTH
20	137-9108	1	Plate-Handle, LH
21	137-9107	1	Plate-Handle, RH
22	140-3916	1	Bracket-Smartstow, RH
23	140-3917	1	Bracket-Smartstow, LH
24	106-9799	2	Wheel-Sweep
25	140-1292	2	Screw-Shoulder
26	138-0719	2	Nut-HF

Rear Bag Assembly

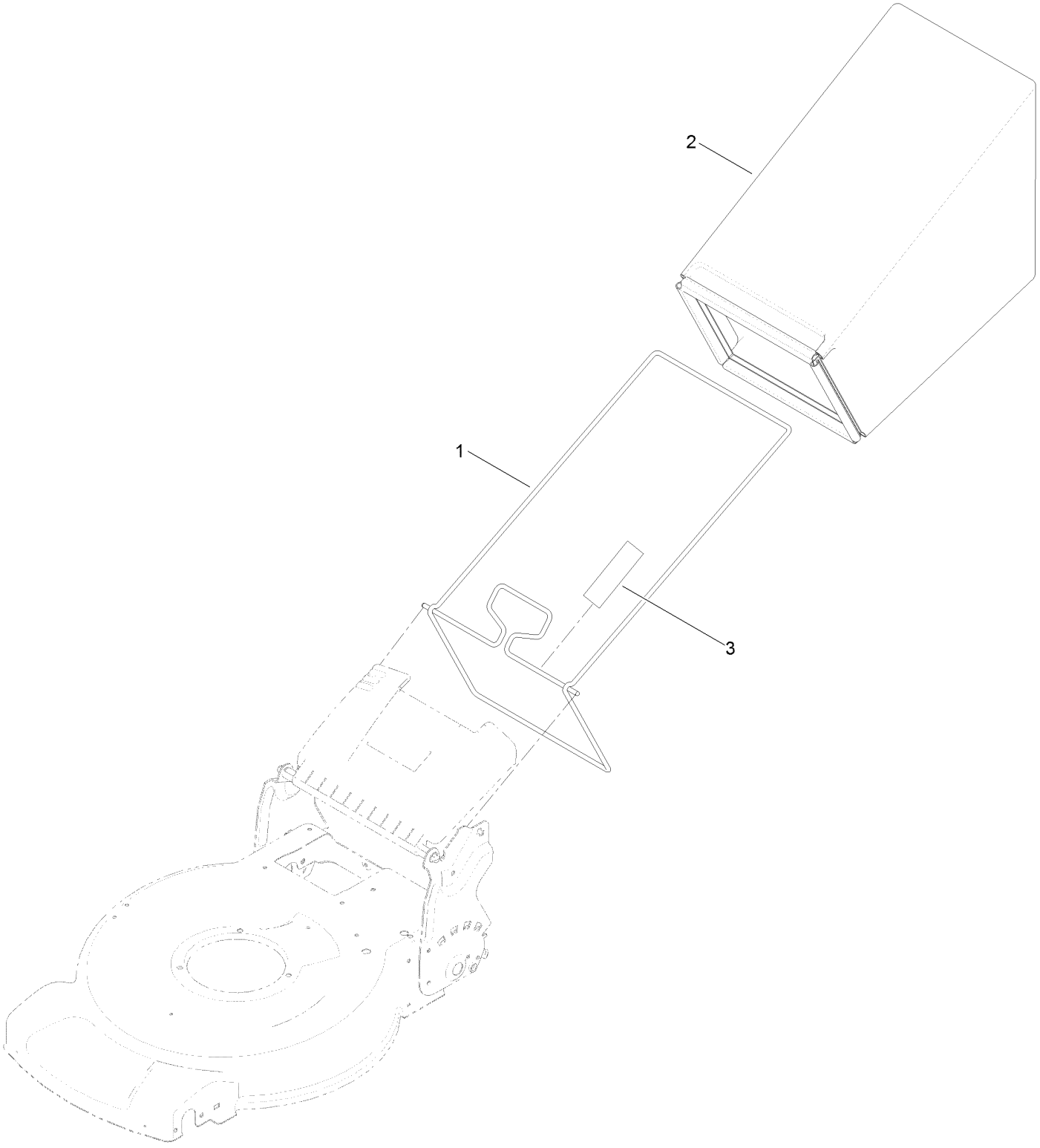

Rear Bag Assembly (continued)

Ref.	*Part Number*	*Qty.*	*Description*
1	132-4529-03	1	Bag Frame ASM
2	114-2664	1	Grass Bag ASM
3	139-8986	1	Decal-Warning (Bag)

Motor Module and Blade Assembly

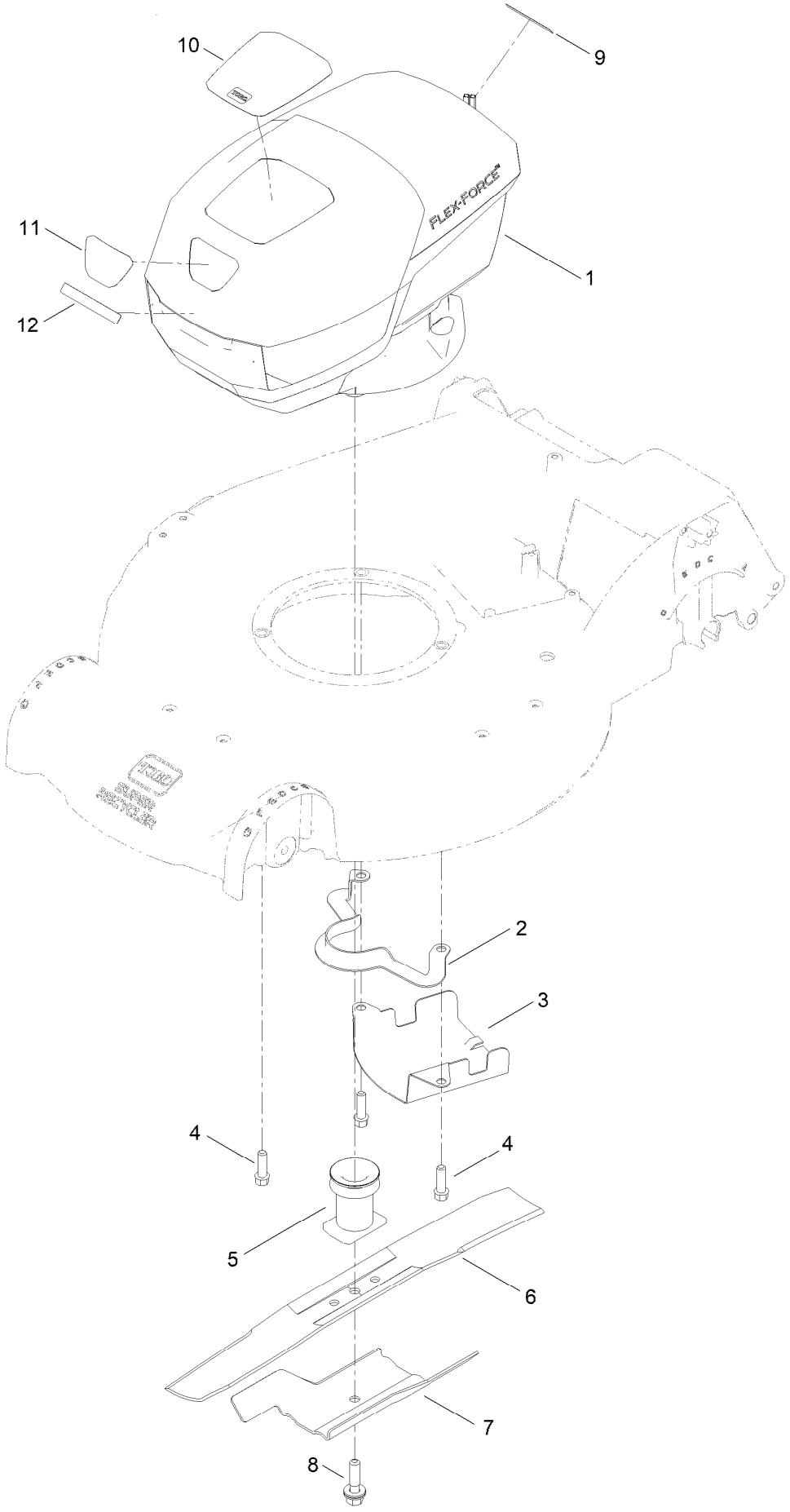

Motor Module and Blade Assembly (continued)

Ref.	Part Number	Qty.	Description
1	140-4203	1	Motor Module
2	108-8110-03	1	Guide-Belt
3	107-7489-03	1	Shield-Grass
4	95-1727	3	Screw-Taptite
5	139-1816	1	Driver-Blade
6	144-3178-03	1	Blade-21In Recycling
7	105-6848-01	1	Accelerator-Blade
8	125-2466	1	Bolt-Blade
9	133-8061	1	Decal-Warning
10	140-4190	1	Decal
11	140-4191	1	Decal
12	144-3183	1	Decal

Motor Module Assembly No. 140-4203

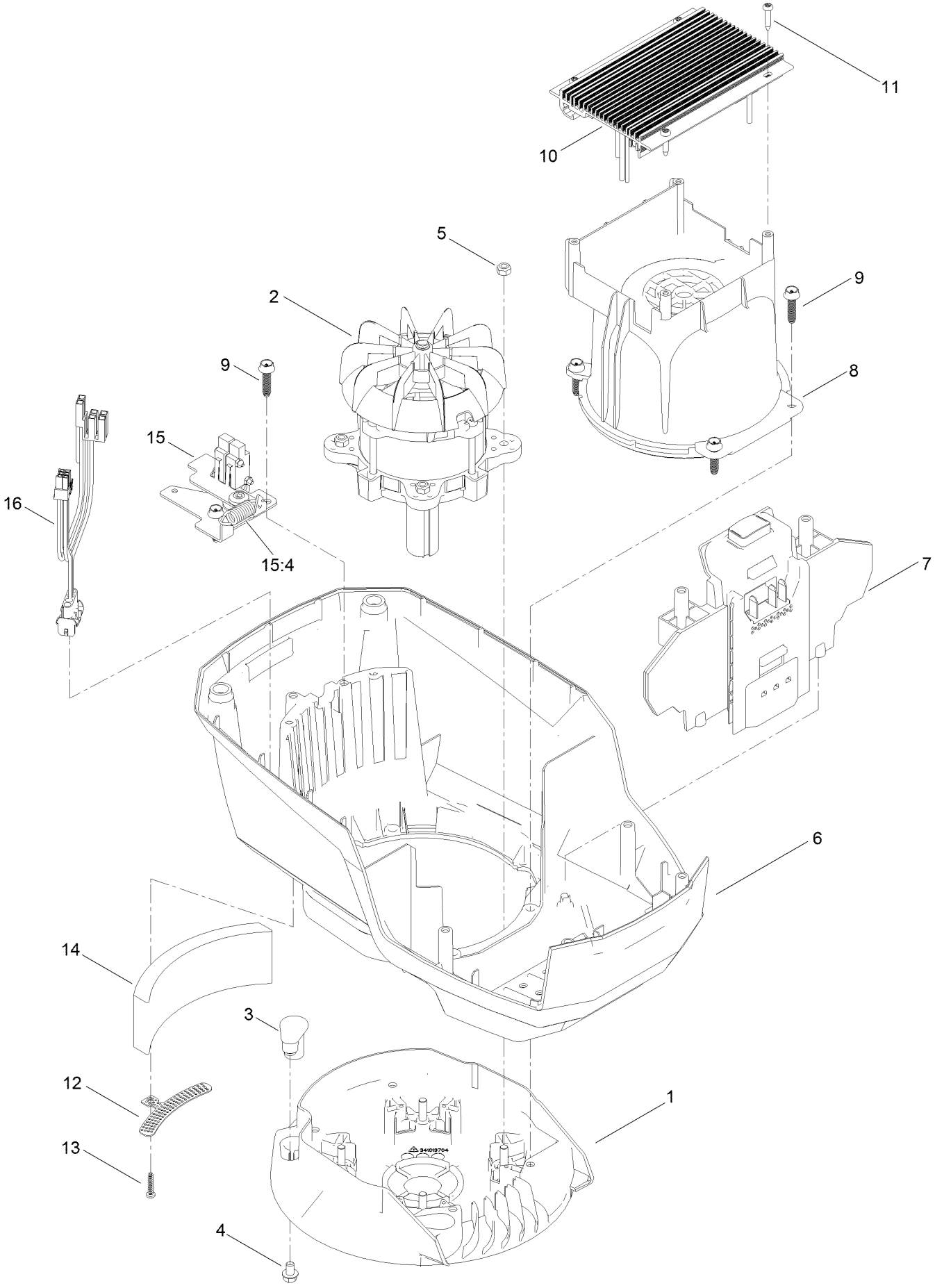

Motor Module Assembly No. 140-4203 (continued)

Ref.	Part Number	Qty.	Description
1	139-6628	1	Base-Mount, Motor
2	140-4119	1	Motor-2Kw
3	131-9732	3	Insert-Mount, Motor
4	137-4795	3	Screw
5	115-7373	4	Nut-Lock
6	139-6631	1	Shroud-Lower
7	139-6632	1	Battery Reciever ASM
8	139-6633	1	Shroud-Motor
9	130-6658	6	Screw-Flange, Plastic
10	140-4117	1	Controller-Motor [2 Spd]
11	139-6642	4	Screw
12	139-6635	1	Bracket-Foam
13	138-3273	1	Screw-Plastic, PPH
14	139-6636	1	Foam
15	133-1918	1	Bail Switch ASM
15:4	104-6478	1	Spring-Extension
16	139-6637	1	Harness-Wire

Motor Module Assembly No. 140-4203
Hood and Upper Shroud Assembly

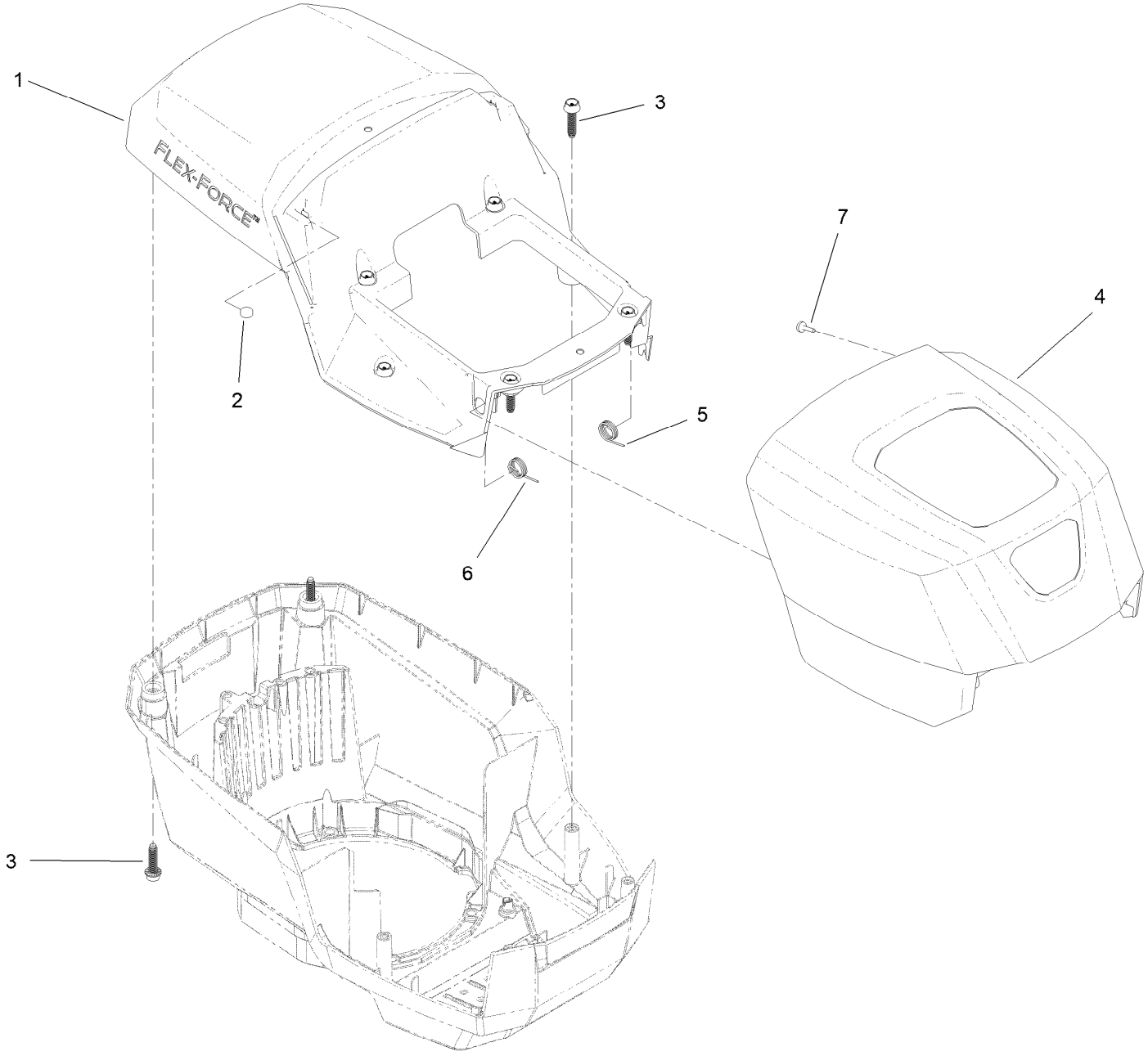

Motor Module Assembly No. 140-4203
Hood and Upper Shroud Assembly (continued)

Ref.	Part Number	Qty.	Description
1	139-6638	1	Shroud-Upper
2	114-5896	2	Magnet
3	130-6658	8	Screw-Flange, Plastic
4	139-6639	1	Hood
5	139-6640	1	Spring-LH
6	139-6641	1	Spring-RH
7	95-4234	2	Screw-PPH

Front Wheel and Height-of-Cut Assembly

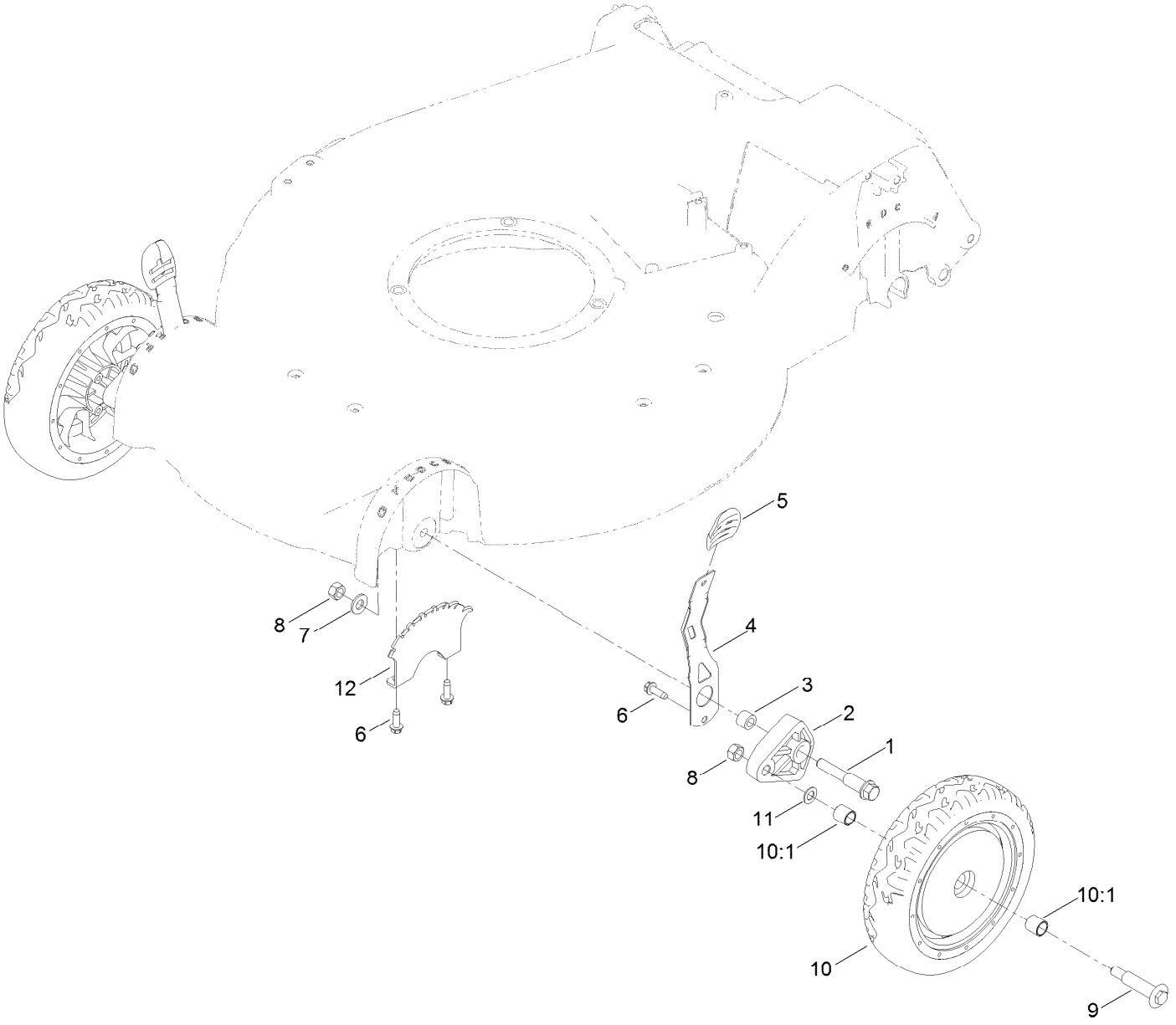

Front Wheel and Height-of-Cut Assembly (continued)

Ref.	Part Number	Qty.	Description
1	114-3467	2	Screw-Shoulder
2	107-7492	2	Arm-Pivot
3	52-2480	2	Spacer-Wheel
4	107-7491	2	Arm-Spring
5	105-3042	2	Knob-Lever, HOC
6	49-2040	6	Screw-HWHTF
7	3256-24	2	Washer-Flat
8	603773	4	Locknut
9	92-1057	2	Bolt-Shoulder
10	140-1294	2	Wheel ASM
10:1	27-6250	2	Bushing
11	40-1940	2	Washer
12	139-1669-01	2	Plate-HOC

Transmission and Rear Wheel Height-of-Cut Assembly

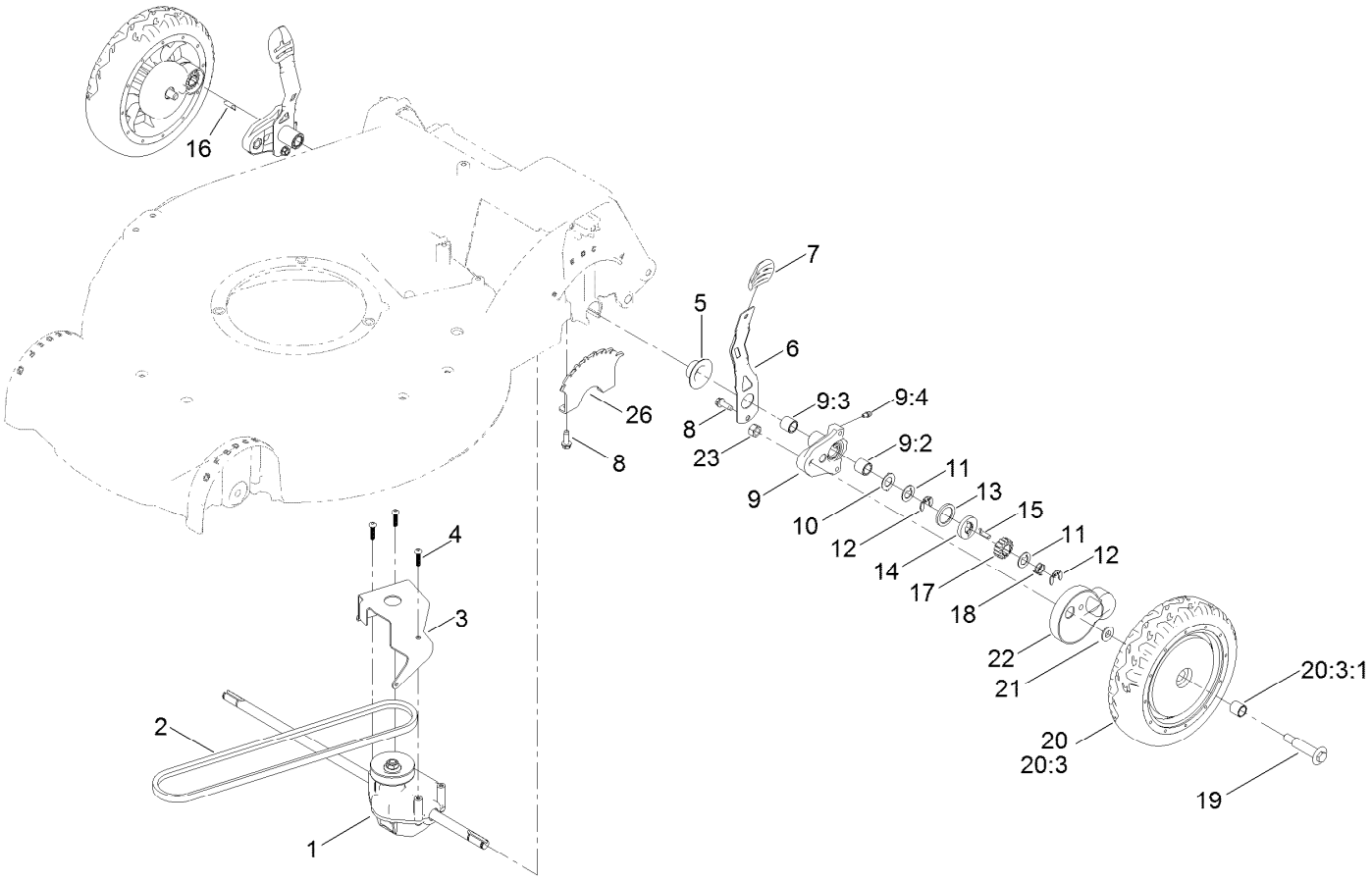

Transmission and Rear Wheel Height-of-Cut Assembly (continued)

Ref.	Part Number	Qty.	Description
1	121-9184	1	Transmission ASM
2	115-4669	1	Belt-V
3	114-7977-03	1	Bracket-Transmission
4	108-7476	3	Screw-Plastite
5	138-3235	2	Cap-End
6	107-7491	2	Arm-Spring
7	105-3042	2	Knob-Lever, HOC
8	49-2040	6	Screw-HWHTF
9	100-8774	2	Pivot Arm ASM
9:2	47-2900	1	Bushing
9:3	70-9760	1	Bushing
9:4	302-56	1	Fitting-Grease
10	65-4730	2	Washer-Arm, Pivot
11	65-4740	4	Washer-Thrust, Keyed
12	65-2720	4	Ring-Retaining, Clip
13	65-4710	2	Ring-Friction
14	65-4760	2	Washer-Clutch
15	139-6644	1	Key-Rocking, L.H.
16	139-6643	1	Key-Rocking, R.H.
17	65-4750	2	Gear-Pinion
18	65-4720	2	Spring-Compression
19	92-1057	2	Bolt-Shoulder
20	140-1295	2	Wheel Gear ASM
20:3		1	Wheel ASM ●
20:3:1	27-6250	2	Bushing
21	74-1671	2	Spacer-Cover, Wheel
22	74-1660	2	Cover-Wheel
23	603773	2	Locknut
26	139-1669-01	2	Plate-HOC

● Not serviced separately

Handle Assembly

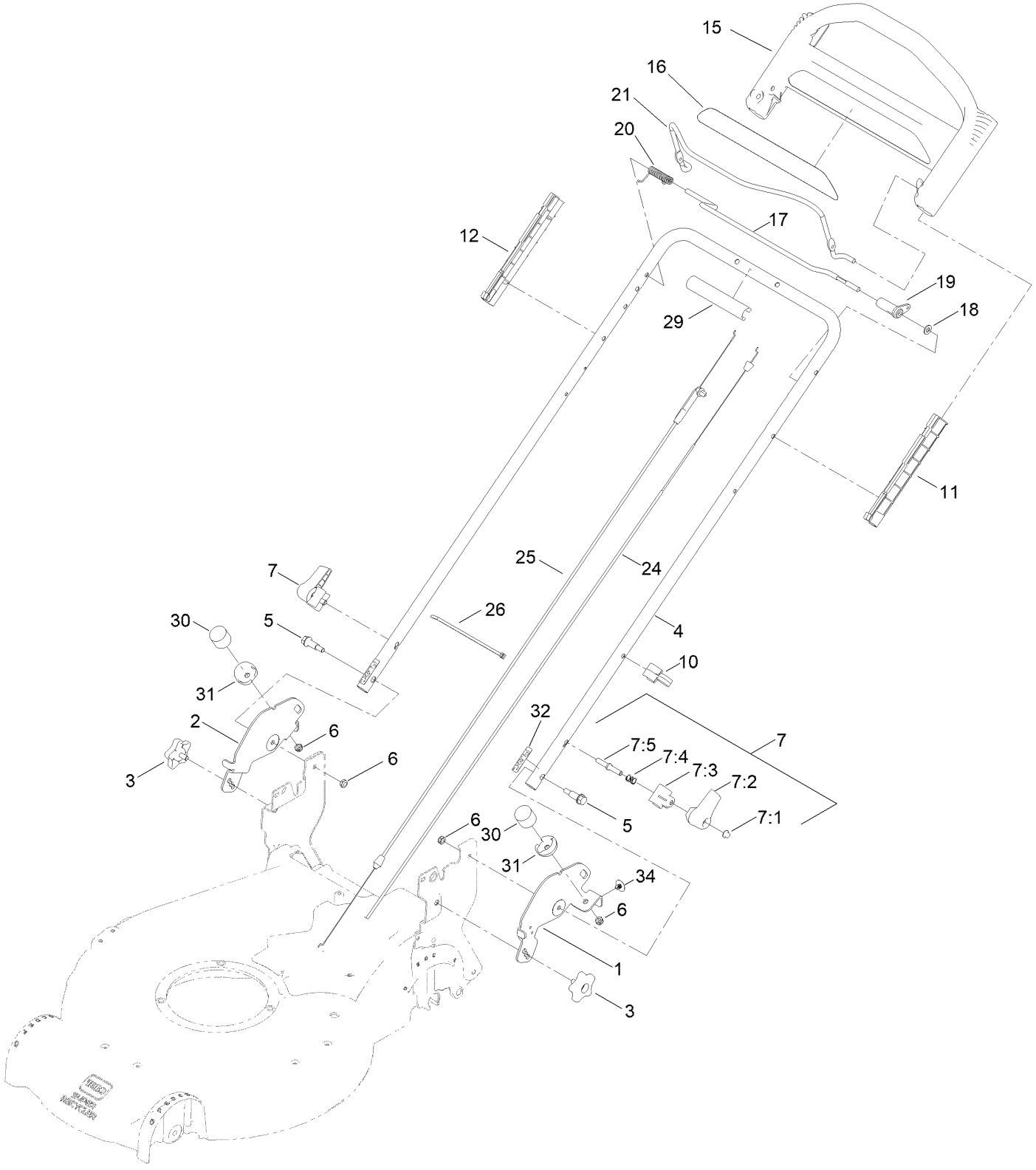

Handle Assembly (continued)

Ref.	Part Number	Qty.	Description
1	140-3831-03	1	Bracket-Float, LH
2	137-4838-03	1	Bracket-Float, RH
3	137-4844	2	Knob-Handle
4	140-3824-05	1	Handle-Upper
5	130-2344	2	Bolt-Shoulder
6	3296-47	4	Nut-Lock, NI
7	138-3249	2	Quick Release ASM
7:1	140-4157	1	Nut-Push
7:2	138-3248	1	Lever-Release
7:3	138-3253	1	Anchor-Spring
7:4	115-2858	1	Spring-Compression
7:5	140-4158	1	Rod-Release
10	114-7988	1	Guide-Cable
11	105-6842	1	Guide-LH
12	105-6841	1	Guide-RH
15	104-8678	1	Handle-Control
16	144-3197	1	Decal
17	136-7150	1	Bar-Control, Traction
18	3256-23	1	Washer-Plain
19	99-1589	1	Lever-Traction
20	136-7166	1	Spring-Torsion
21	131-0880-03	1	Bail-Brake
24	117-9389	1	Cable-Traction
25	117-5900	1	Cable-Brake
26	614249	3	Tie-Cable
29	131-4551	1	Cover-Handle
30	137-4803	2	Bumper-Rubber
31	137-9100	2	Cover-Bumper
32	140-3827	2	Decal-Flex
34	130-6721	2	Clip-Tree

Electric Starter Assembly

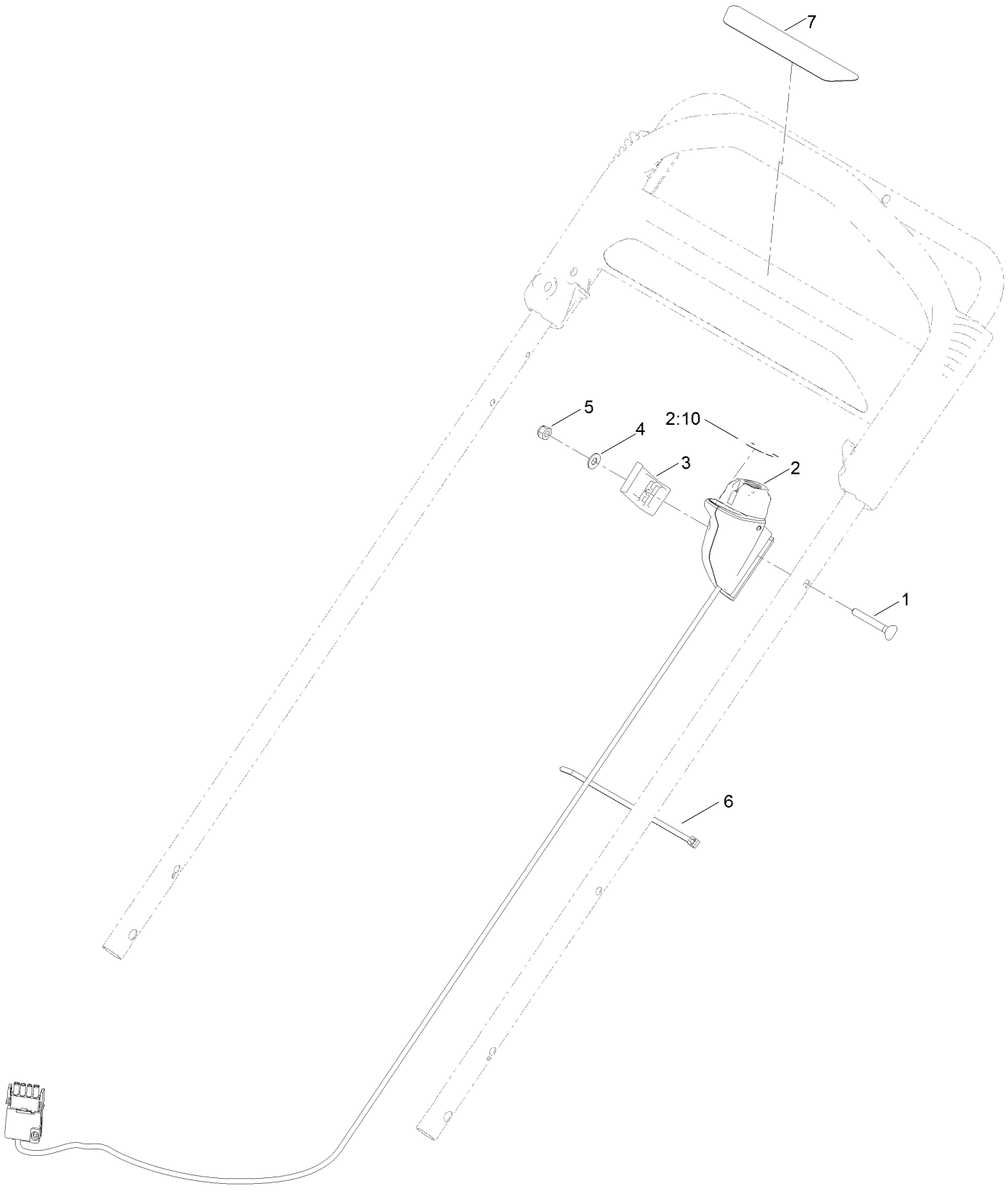

Electric Starter Assembly (continued)

Ref.	Part Number	Qty.	Description
1	95-4453	1	Screw
2	140-4207	1	Starter Switch ASM
2:10	134-4691	1	Decal - Control Speed
3	136-7029	1	Clamp-Cable
4	3256-1	1	Washer-Flat
5	3296-73	1	Nut-Lock, NI
6	614249	1	Tie-Cable
7	140-1324	1	Decal-Controls (60V, Start)

Attachments and Accessories

For 21388T 60V 21in Super Recycler Lawn Mower

Product Name	Model/Part
Bagging Blade	108-3759-03
Traction Assist Handle Kit	131-4590
Power Clear 21in 60V Cordless (Bare Tool)	39901T
Bag-Walk Behind (Toro)	490-7318
Lawnmower Cover	490-7462
60V Cordless Blower (Bare Tool)	51820T
60V Cordless Trimmer (Bare Tool)	51830T
60V Battery Charger 2 AMP	88602
60V LI-ION Battery 6.0 AH	88660
60V LI-ION Battery 7.5 AH	88675

Notes:

Notes:

Notes:



Count on it.