1975

FORM NO. 3310-649

TORO®

MODEL NO. 58013–500001 & UP

PARTS CATALOG

3 H.P. TILLER

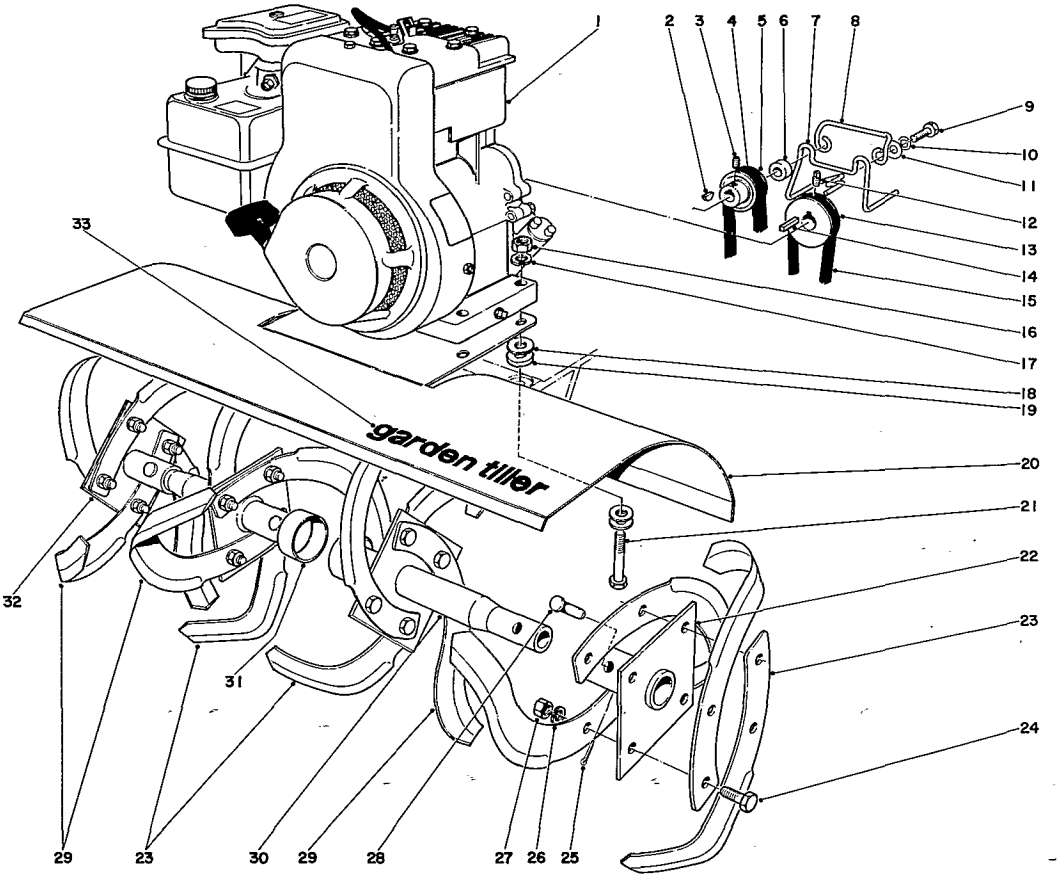

TINE AND ENGINE ASSEMBLY

Ref. No.	Part No.	Description	No. Used
1	221-276	Engine	1
2	3257-24	Woodruff Key	1
3	3245-7	Set Screw	1
4	7-0355	Belt	1
5	25-2170	Reverse Pulley	1
6	2-0780	Spacer	2
7	7-0351	Upper Belt Guide	1
8	20-8860	Cover Latch	1
9	321-11	Capscrew	2
10	3253-3	Lockwasher	2
11	3256-2	Flatwasher	2
12	3246-2	Set Screw	1
13	7-0346	Engine Pulley	1
14	7-0036	Key	1
15	7-0354	Belt	1
16	3217-6	Nut	4
17	3253-4	Lockwasher	4

Ref. No.	Part No.	Description	No. Used
18	3256-3	Washer	12
19	7-0081	Special Washer	4
20	7-0072	Plant Shield	1
21	322-11	Capscrew	4
22	24-6960	Axle L.H. Outer	1
23	7-0103	Tine R.H.	8
24	323-6	Capscrew	16
25	3272-7	Cotter Pin	4
26	3253-21	Lockwasher	16
27	3217-7	Nut	16
28	7-2116	Tine Pin	4
29	7-0102	Tine L.H.	8
30	24-6970	Axle L.H. Inner	1
31	24-6950	Axle R.H. Inner	1
32	24-6940	Axle R.H. Outer	1
33	17-8340	Decal	1

Copyright 1974 by
The Toro Company
Bloomington, Minnesota 55420 U.S.A.

Price $1.00

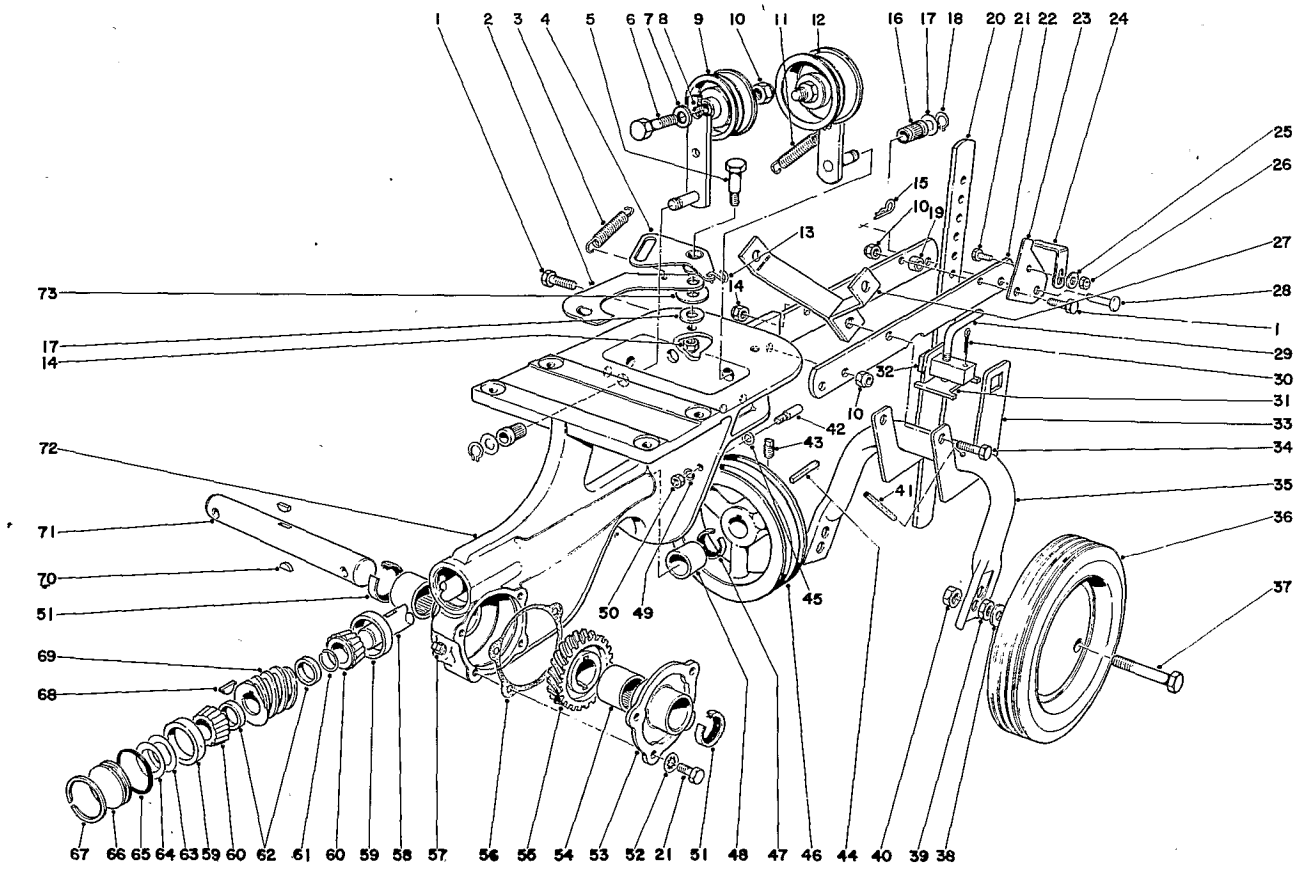

CHASSIS ASSEMBLY

Ref. No.	Part No.	Description	No. Used
1	323-8	Capscrew	3
2	7-0028	Reverse Link	1
3	7-1322	Spring Reverse Return	1
4	7-0027	Bell Crank	1
5	7-0030	Shoulder Bolt	1
6	323-8	Capscrew	2
7	3256-24	Washer	2
8	7-0050	Idler Arm	2
9	7-0056	Idler Pulley	1
10	32152-2	Nut	5
11	7-0025	Spring	1
12	3-4244	Pulley	1
13	7-3618	S Hook	1
14	32152-1	Locknut	2
15	3290-255	Hair Pin Cotter	1
16	7-0023	Bearing Idler	2
17	3256-23	Washer	4
18	32120-35	Snap Ring	2
19	17-6530	Spacer	1
20	7-0076	Depth Gauge	1
21	321-3	Capscrew	6
22	20-8910	Draw Bar	2
23	17-8480	Hinge Latch	1

Ref. No.	Part No.	Description	No. Used
24	17-8490	Latch Drag Bar	1
25	3256-2	Flat Washer	1
26	32152-4	Hex Nut	1
27	7-9340	Support Handle	2
28	7-2116	Clevis Pin	1
29	20-8870	Handle Jack	1
30	3272-11	Cotter Pin	2
31	20-8890	Plate Jack	1
32	20-8880	Nut – Jack	1
33	20-8900	Saddle Axle	2
34	322-9	Capscrew	1
35	20-8930	Yoke Axle	1
36	7-0075	Wheel Assembly	2
37	325-13	Capscrew	2
38	3256-6	Washer	2
39	3218-5	Jam Nut	2
40	32152-3	Locknut	2
41	32121-48	Roll Pin	2
42	7-0347	Belt Guide	2
43	3246-2	Set Screw	1
44	7-0036	Key	1
45	3256-16	Washer	2
46	7-0350	Pulley	1

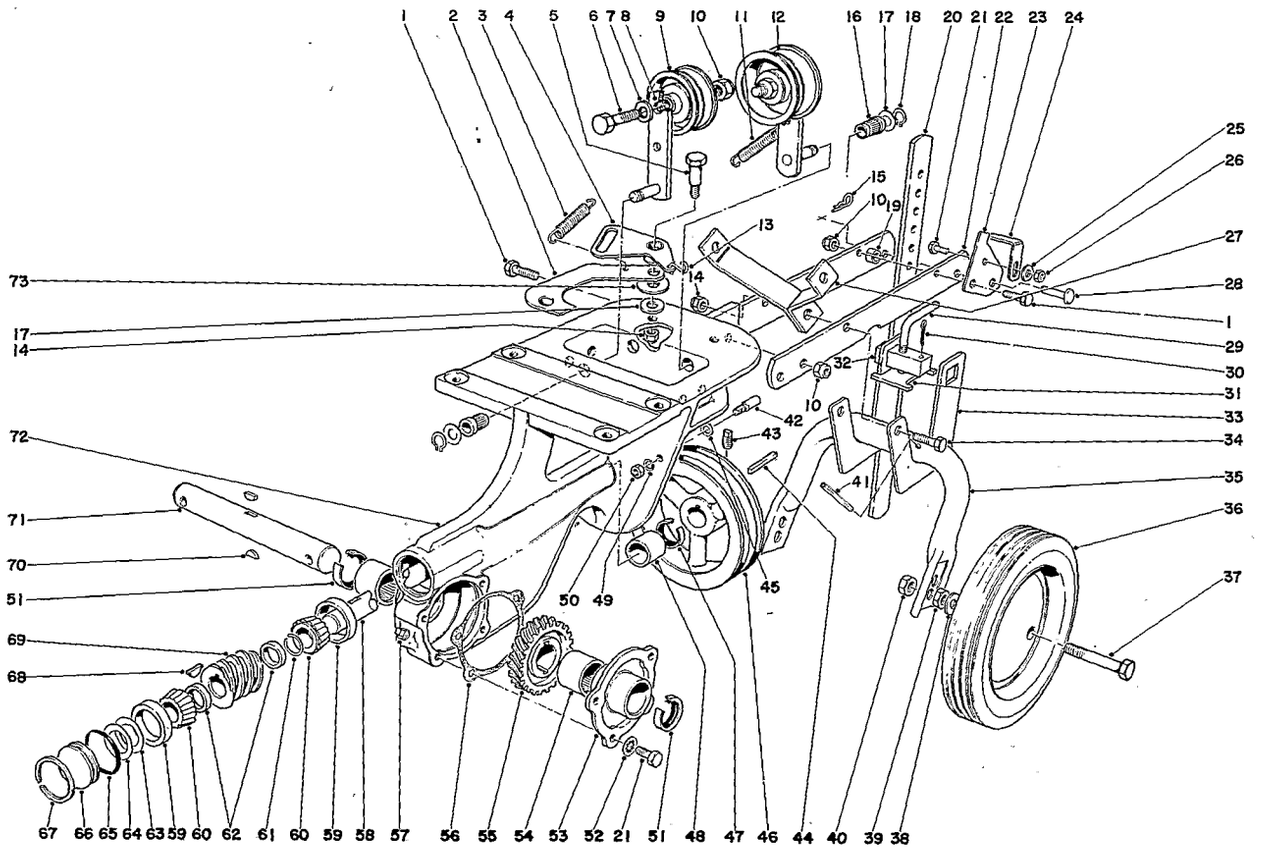

CHASSIS ASSEMBLY (Continued)

Ref. No.	Part No.	Description	No. Used
47	253-84	Oil Seal	1
48	256-167	Bushing	1
49	3255-7	Lockwasher	2
50	3218-1	Jam Nut	2
51	7-0045	Oil Seal	2
52	3254-8	Lockwasher	4
53	7-0048	Cover	1
54	252-52	Needle Bearing	2
55	7-0047	Worm Gear	1
56	7-0020	Gasket	1
57	281-1	Pipe Plug	1
58	7-0012	Worm Shaft	1
59	254-79	Bearing Cup	2
60	254-78	Bearing Cone	2
61	7-0013	Snap Ring	1
62	7-0015	Spacer	2

Ref. No.	Part No.	Description	No. Used
63	23-7700	Shim (.020)	A/R
64	23-7690	Shim (.010)	A/R
65	237-71	O-Ring	1
66	23-7710	Plug	1
67	7-0018	Snap Ring	1
68	3257-23	Woodruff Key	1
69	7-0016	Worm Gear	1
70	3257-33	Woodruff Key	2
71	7-0046	Shaft	1
72	23-7720	Chassis	1
73	3256-25	Washer	2
*	17-8200	Pick Tines Attach. (optional)	1
*	17-8620	Slasher Tines Attach. (optional)	1
*	59063	Til-Row Attachment (optional)	1
*	5-7939	Loose Parts Bag	1

*Not Illustrated

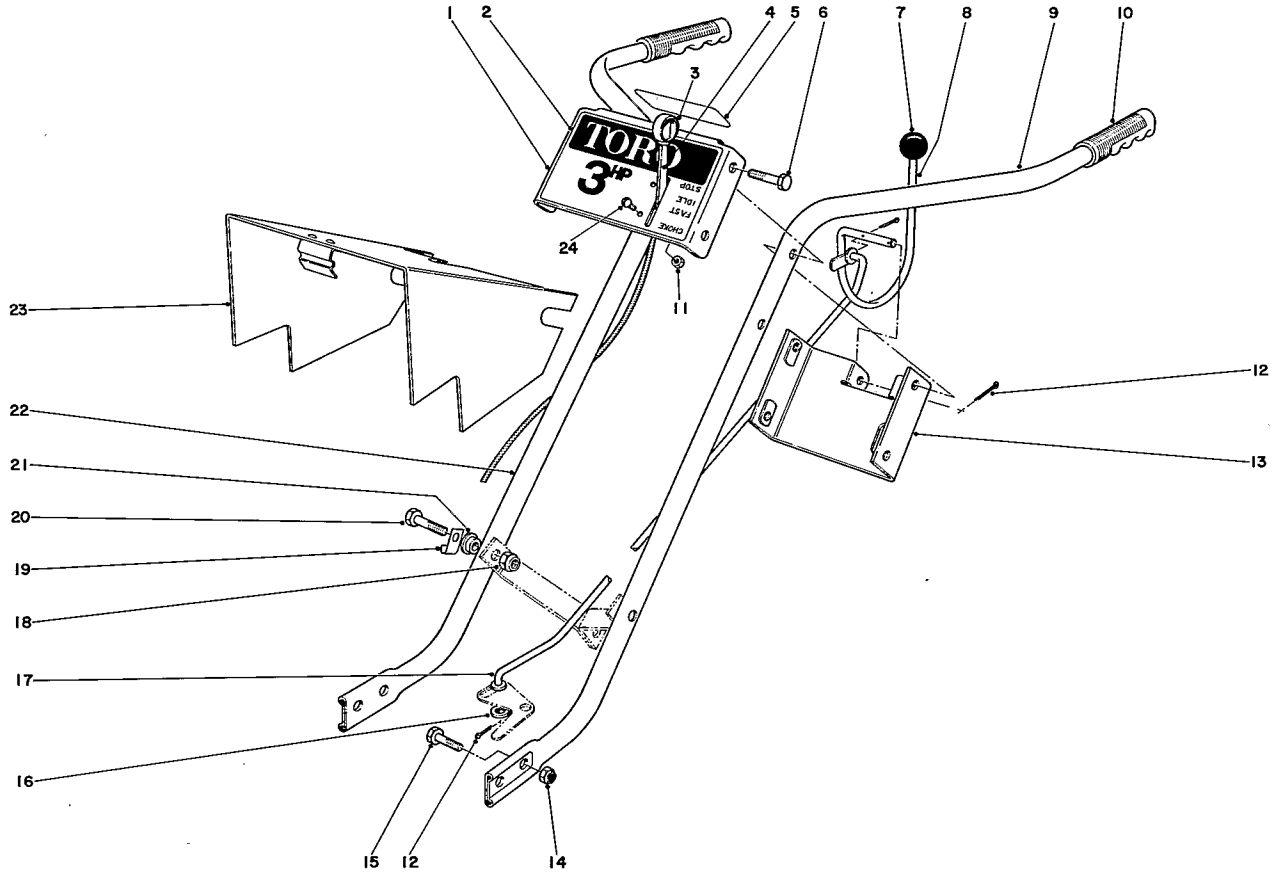

HANDLE ASSEMBLY

Ref. No.	Part No.	Description	No. Used
1	17-8580	Control Plate	1
2	17-8320	Decal (Toro)	1
3	233-35	Knob	1
4	17-9130	Throttle Control	1
5	7-9450	Decal (Clutch)	1
6	322-9	Capscrew	4
7	233-22	Knob	1
8	7-9320	Clutch Control	1
9	7-9270	Handle L.H.	1
10	235-19	Handle Grip	2
11	32149-7	Locknut	2
12	3272-7	Cotter Pin	4

Ref. No.	Part No.	Description	No. Used
13	17-8460	Handle Brace	1
14	32152-2	Locknut	4
15	323-6	Capscrew	4
16	3256-24	Washer	1
17	7-0078	Clutch Rod	1
18	32152-1	Locknut	2
19	7-0077	Clip	1
20	322-11	Capscrew	2
21	7-2041	Bushing	2
22	7-9280	Handle R.H.	1
23	7-9190	Pulley Cover	1
24	3251-2	Rd. Hd. Machine Screw	2

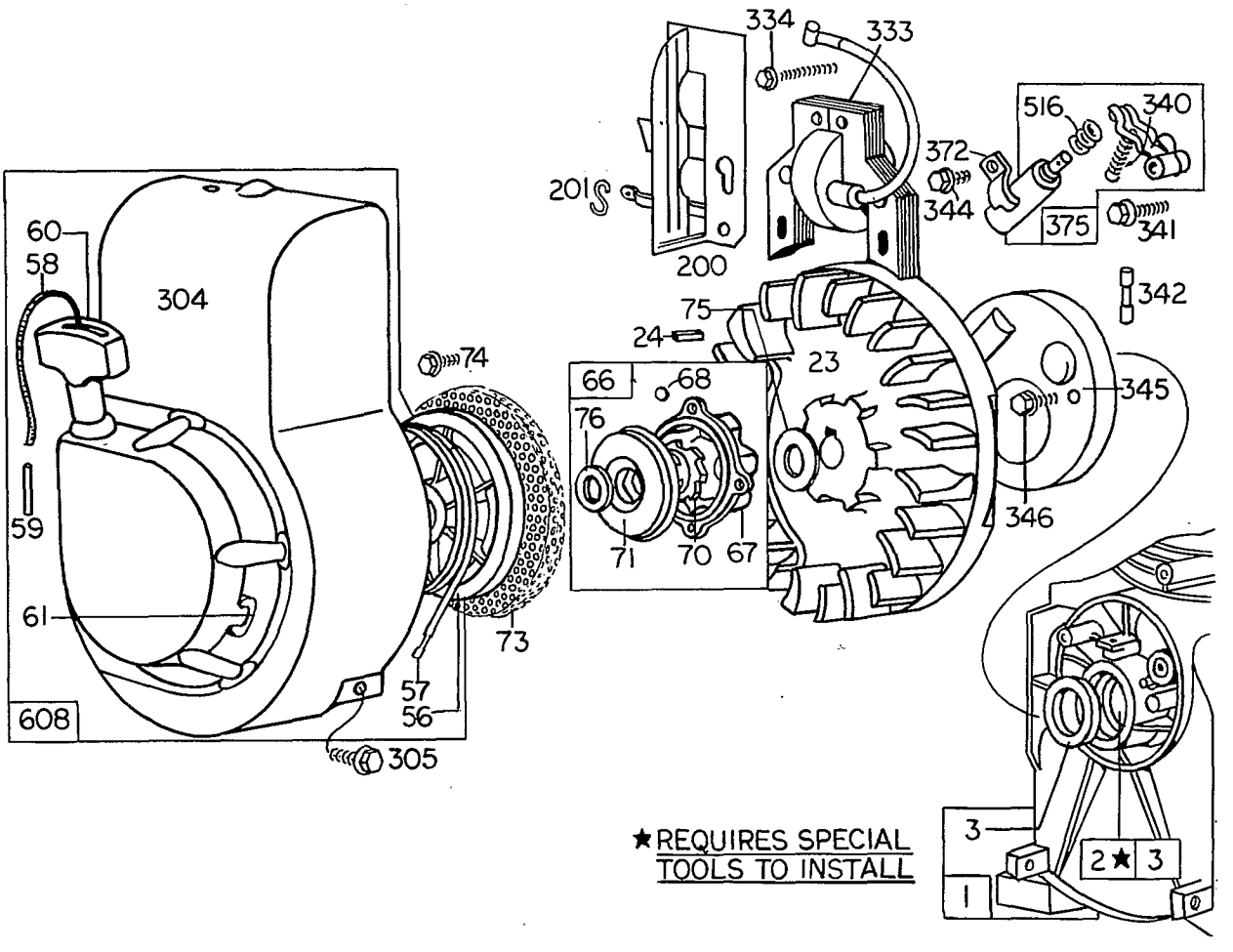

REWIND STARTER ASSEMBLY

Ref. No.	Part No.	Description	No. Used
1	296561	Cylinder Assembly	1
2	293708	Bushing - Cylinder	1
3	89660	Seal - Oil	1
23	296884	Flywheel - Magneto	1
24	61760	Key - Flywheel	1
56	298738	Pulley - Rewind Starter	1
57	294303	Spring - Rewind Starter	1
58	66694	Rope - Starter	1
59	230228	Pin - Starter Grip	1
60	66728	Grip - Starter Rope	1
61	68618	Bumper - Starter Pulley	1
66	298310	Clutch Assembly	1
67	211383	Housing - Starter Clutch	1
68	63770	Ball - Clutch	1
70	298436	Ratchet	1
71	221653	Washer - Clutch Retainer	1
73	221661	Screen - Rotating	1
74	93490	Screw - Rotating Screen Mounting Sem	1
75	220865	Washer - Spring	1
76	68238	Washer - Ratchet Sealing	1
200	297310	Blade - Governor	1
201	260898	Link - Governor	1

Ref. No.	Part No.	Description	No. Used
304	294260	Housing - Blower	1
305	93158	Screw - Blower Housing Mounting	1
333	298502	Armature - Magneto	1
334	93381	Screw - Armature Mtg. Sem	1
340	26018	Spring - Breaker Arm	1
341	93381	Screw - Sem	1
342	65704	Plunger - Breaker Point	1
344	93042	Screw - Condenser Mounting Sem	1
345	220366	Cover - Breaker Point and Condenser	1
346	93014	Screw - Dust Cover Mounting	1
372	220477	Clamp - Condenser	1
375	294628	Breaker Points and Condenser Set	1
		Note: 299061 Ignition Kit Includes: 294628 Point Set 65704 Plunger 61760 Key - Flywheel	
516	260374	Spring - Connector	1
608	294259	Starter Assy. - Rewind	1

ENGINE BRIGGS & STRATTON MODEL NO. 80292-0582-01

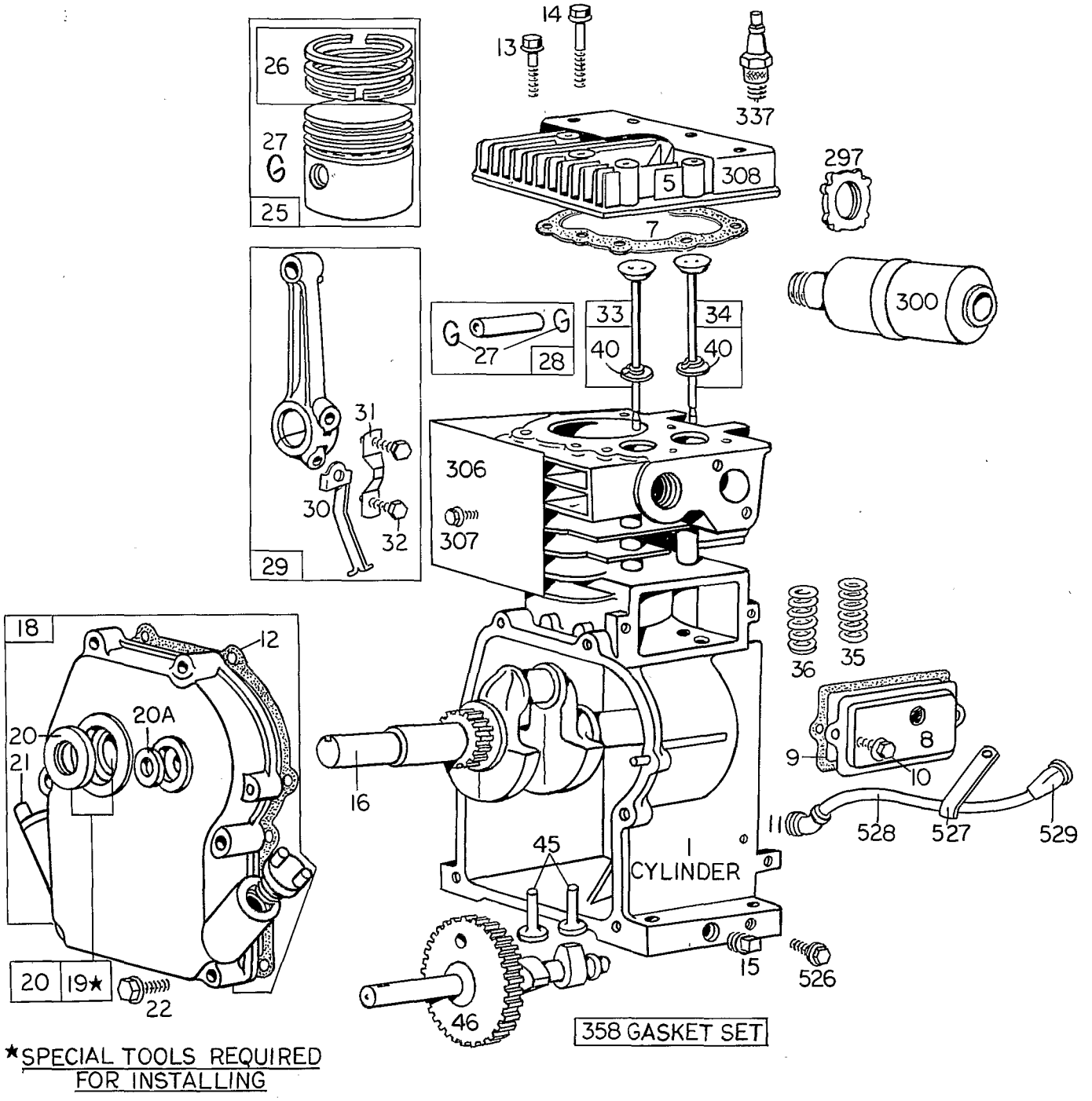

★SPECIAL TOOLS REQUIRED FOR INSTALLING

ENGINE BRIGGS & STRATTON MODEL NO. 80292-0582-01

Ref. No.	Part No.	Description	No. Used
1	296561	Cylinder Assembly	1
5	210812	Head - Cylinder	1
7	*27670	Gasket - Cylinder Head	1
8	294178	Breather - Valve Chamber	1
9	*27549	Gasket - Valve Cover	1
10	93394	Screw - Breather Mounting Sem	1
11	66578	Grommet - Breather Tube	1
12	*27586	Gasket - Crankcase — .015" thick (Standard)	1
	*27617	Gasket - Crankcase - .005" thick	1
	*27618	Gasket - Crankcase - .009" thick	1
13	93111	Screw - Cylinder Head	1
14	93113	Screw - Cylinder Head	1
15	91249	Plug - Pipe, Square Head	1
16	260257	Crankshaft	1
18	298281	Cover Assy. - Crankcase	1
19	293708	Bushing - Crankcase Cover	1
20	89660	Seal - Oil	
20A	298041	Seal - Oil Used on the auxiliary P.T.O. Shaft	1
21	66768	Plug - Oil Filler	1
22	93032	Screw - Crankcase Cover Mounting Sem	1
25	295587	Piston Assembly - Std.	1
	295588	Piston Assembly - .010" O.S.	1
	295589	Piston Assembly - .020" O.S.	1
	295590	Piston Assembly - .030" O.S.	1
		RING SETS:	
		Note: For Chrome Piston Ring Set - standard size - order Part No. 297201.	
26	294232	Ring Set - Std. Piston, Consists of: 210471 Ring, Piston, Compression, Top 210472 Ring, Piston, Compression, Center 210473 Ring, Piston, Oil	1
	294224	Ring Set - .010" O.S. Piston Consists of: 210490 Ring, Piston, Comp., Top, .010" O.S. 210489 Ring, Piston, Compression, Center, .010" O.S. 210491 Ring, Piston, Oil, .010" O.S.	1
	294225	Ring Set - .020" O.S. Piston Consists of: 210493 Ring, Piston, Comp., Top, .020" O.S. 210492 Ring, Piston, Compression, Center, .020" O.S. 210494 Ring, Piston, Oil, .020" O.S.	1
	294226	Ring Set - .030" O.S. Piston, Consists of: 210496 Ring, Piston, Comp., Top, .030" O.S. 210495 Ring, Piston, Compression, Center, .030" O.S. 210497 Ring, Piston, Oil, .030" O.S.	1
27	26026	Lock - Piston Pin	1
28	298909	Pin Assembly - Piston - Std.	1
	298908	Pin Assembly - Piston - .005" O.S.	1
29	294367	Rod Assy. - Connecting Note: For Connecting Rod with .020" undersize Crankpin Bore - order No. 296079.	1
30	220670	Dipper - Connecting Rod	1
31	220756	Lock - Connecting Rod Screw	1
32	92296	Screw - Connecting Rod	1
33	296676	Valve - Exhaust (Grooved Stem Includes Retainer No. 93312)	
34	296677	Valve - Intake (Grooved Stem Includes Retainer No. 93312)	1
35	260552	Spring - Intake Valve	1
36	26478	Spring - Exhaust Valve	1
40	93312	Retainer - Valve Spring	1
45	230173	Tappet - Valve	1
46	211337	Gear - Cam	1
297	91811	Locknut - Exhaust Elbow	1
300	89966	Muffler - Exhaust	1
306	220478	Shield - Cylinder	1
307	93042	Screw - Cylinder Shield Mounting Sem	1
308	220581	Cover - Cylinder Head	1
337	298809	Plug - Spark (with gasket)	1
358	297275	Gasket Set	1
526	93343	Screw - Tank Bracket Mounting Sem	1
527	221279	Clamp - Breather Tube	1
528	230634	Tube - Breather	1
529	67608	Grommet - Breather Tube	1

*Included in Gasket Set - Part No. 297275.

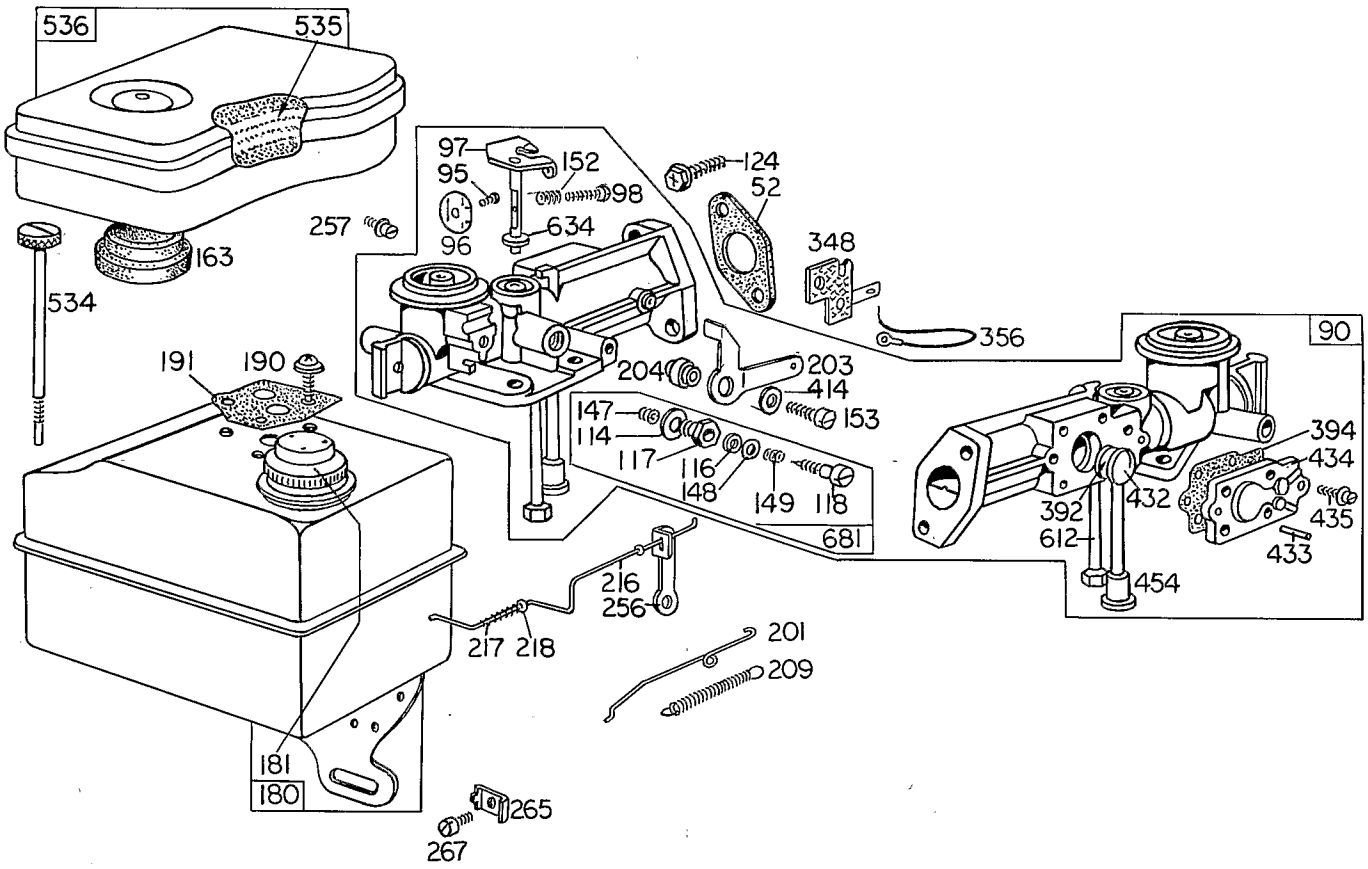

CARBURETOR ASSEMBLY

Ref. No.	Part No.	Description	No. Used
52	*27355	Gasket - Intake Elbow Mounting	2
90	296882	Carburetor Assy. (Choke-A-Matic)	1
95	93385	Screw - Throttle Valve Mounting Sem	1
96	211203	Valve - Throttle	1
97	297961	Shaft and Lever - Throttle	1
98	93392	Screw - Machine, Rd. Hd.	1
114	66594	Gasket - Needle Valve Nut	1
116	65978	Packing - Needle Valve	1
117	230590	Nut - Needle Valve	1
118	23433	Valve - Needle	1
124	93357	Screw - Hex. Hd.	1
147	230591	Seat - Needle Valve	1
148	22235	Washer - Needle Valve	2
149	26336	Spring - Needle Valve	1
152	260746	Spring Throttle Adjustment	1
153	93177	Screw - Bell Crank	1
163	*27660	Gasket - Air Cleaner Mounting	1
180	296591	Tank Assy. - Fuel	1
181	298425	Cap - Fuel Tank	1
190	93341	Screw - Fuel Tank Mtg. Sem	1
191	*27911	Gasket - Fuel Tank Mounting	1
201	260898	Link - Governor	1
203	221147	Crank - Bell	1

Ref. No.	Part No.	Description	No. Used
204	230531	Collar	1
209	260041	Spring - Air Vane Gov.	1
216	260449	Link - Choke	1
217	260189	Spring - Choke Link	1
218	221198	Washer - Choke Link	3
256	220952	Lever - Speed Adjuster	1
257	93263	Screw - Fil. Hd.	1
265	221370	Clamp - Casing	1
267	93496	Screw - Sem	1
348	296110	Plate Assembly - Stop Switch Insulator	1
356	391115	Wire - Ground	1
392	260455	Spring - Fuel Pump Diaphragm	1
394	270026	Diaphragm	1
414	220982	Washer	1
432	221377	Cap - Spring	1
433	93265	Pin - Diaphragm Cover	1
434	210959	Cover - Diaphragm	1
435	93141	Screw - Diaphragm Cover	1
454	296178	Housing - Fuel Pipe Screen	1
535	27987	Element - Air Cleaner	1
536	296766	Cleaner Assy. - Air	1
612	296811	Pipe - Fuel (1-5/8" long) Plastic	1
634	270167	Washer - Throttle Shaft (Felt)	1
681	299060	Needle Valve Kit	1

*Included in Gasket Set - Part No. 297275.

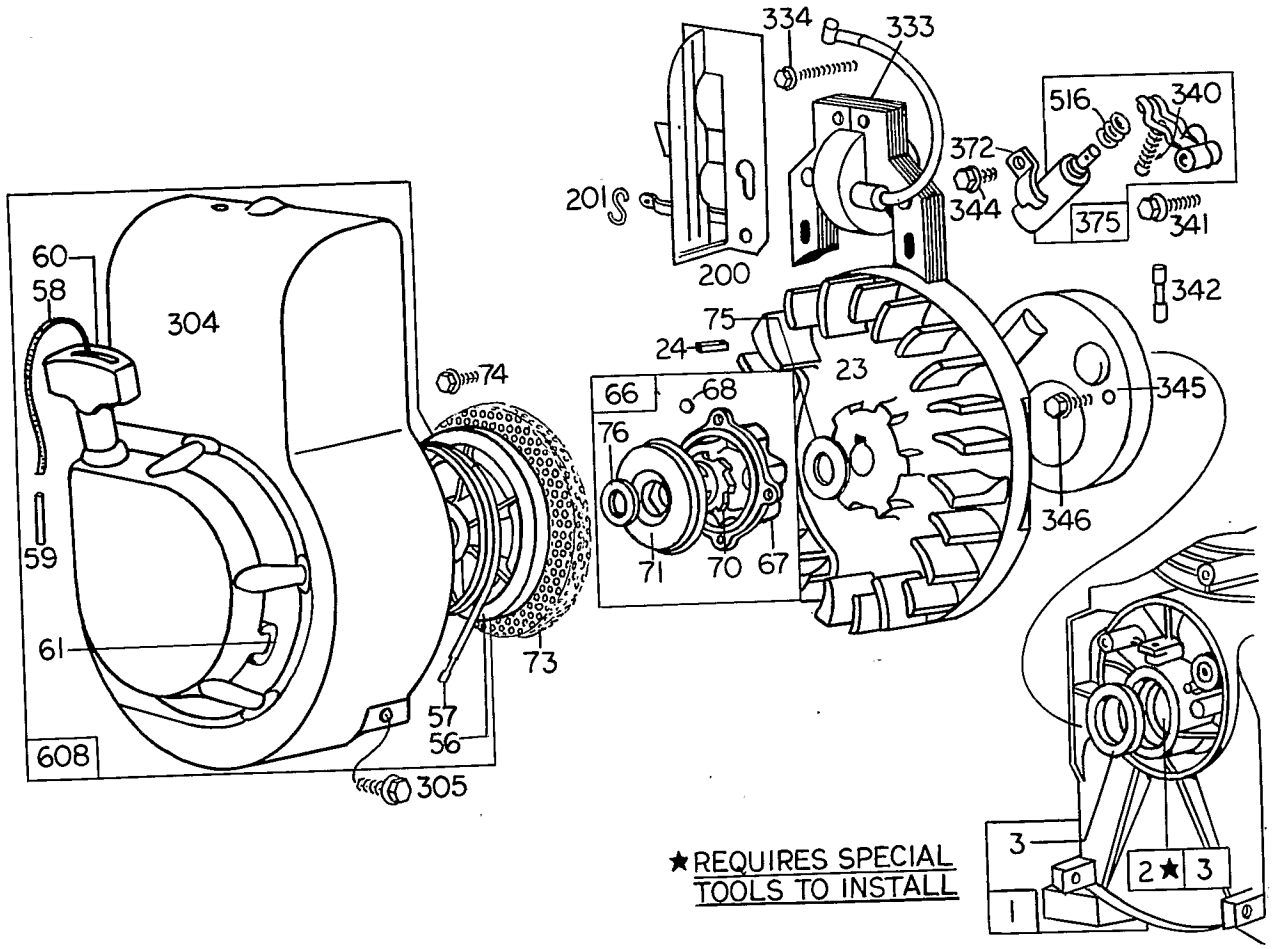

REWIND STARTER ASSEMBLY

Ref. No.	Part No.	Description	No. Used
1	296561	Cylinder Assembly	1
2	293708	Bushing - Cylinder	1
3	89660	Seal - Oil	1
23	296884	Flywheel - Magneto	1
24	61760	Key - Flywheel	1
56	298738	Pulley - Rewind Starter	1
57	294303	Spring - Rewind Starter	1
58	66694	Rope - Starter	1
59	230228	Pin - Starter Grip	1
60	66728	Grip - Starter Rope	1
61	68618	Bumper - Starter Pulley	1
66	298310	Clutch Assembly	1
67	211383	Housing - Starter Clutch	1
68	63770	Ball - Clutch	1
70	298436	Ratchet	1
71	221653	Washer - Clutch Retainer	1
73	221661	Screen - Rotating	1
74	93490	Screw - Rotating Screen Mounting Sem	1
75	220865	Washer - Spring	1
76	68238	Washer - Ratchet Sealing	1
200	297310	Blade - Governor	1
201	260898	Link - Governor	1

Ref. No.	Part No.	Description	No. Used
304	294260	Housing - Blower	1
305	93158	Screw - Blower Housing Mounting	1
333	298502	Armature - Magneto	1
334	93381	Screw - Armature Mtg. Sem	1
340	26018	Spring - Breaker Arm	1
341	93381	Screw - Sem	1
342	65704	Plunger - Breaker Point	1
344	93042	Screw - Condenser Mounting Sem	1
345	220366	Cover - Breaker Point and Condenser	1
346	93014	Screw - Dust Cover Mounting	1
372	220477	Clamp - Condenser	1
375	294628	Breaker Points and Condenser Set Note: 299061 Ignition Kit Includes: 294628 Point Set, 65704 Plunger, 61760 Key - Flywheel	1
516	260374	Spring - Connector	1
608	294259	Starter Assy. - Rewind	1

ENGINE BRIGGS & STRATTON MODEL NO. 80292-0582-01

Ref. No.	Part No.	Description	No. Used
1	296561	Cylinder Assembly	1
5	210812	Head - Cylinder	1
7	*27670	Gasket - Cylinder Head	1
8	294178	Breather - Valve Chamber	1
9	*27549	Gasket - Valve Cover	1
10	93394	Screw - Breather Mounting Sem	1
11	66578	Grommet - Breather Tube	1
12	*27586	Gasket - Crankcase — .015" thick (Standard)	1
	*27617	Gasket - Crankcase - .005" thick	1
	*27618	Gasket - Crankcase - .009" thick	1
13	93111	Screw - Cylinder Head	1
14	93113	Screw - Cylinder Head	1
15	91249	Plug - Pipe, Square Head	1
16	260257	Crankshaft	1
18	298281	Cover Assy. - Crankcase	1
19	293708	Bushing - Crankcase Cover	1
20	89660	Seal - Oil	
20A	298041	Seal - Oil Used on the auxiliary P.T.O. Shaft	1
21	66768	Plug - Oil Filler	1
22	93032	Screw - Crankcase Cover Mounting Sem	1
25	295587	Piston Assembly - Std.	1
	295588	Piston Assembly - .010" O.S.	1
	295589	Piston Assembly - .020" O.S.	1
	295590	Piston Assembly - .030" O.S.	1
		RING SETS:	
		Note: For Chrome Piston Ring Set - standard size - order Part No. 297201.	
26	294232	Ring Set - Std. Piston, Consists of: 210471 Ring, Piston, Compression, Top 210472 Ring, Piston, Compression, Center 210473 Ring, Piston, Oil	1
	294224	Ring Set - .010" O.S. Piston Consists of: 210490 Ring, Piston, Comp., Top, .010" O.S. 210489 Ring, Piston, Compression, Center, .010" O.S. 210491 Ring, Piston, Oil, .010" O.S.	1
	294225	Ring Set - .020" O.S. Piston Consists of: 210493 Ring, Piston, Comp., Top, .020" O.S. 210492 Ring, Piston, Compression, Center, .020" O.S. 210494 Ring, Piston, Oil, .020" O.S.	1
	294226	Ring Set - .030" O.S. Piston, Consists of: 210496 Ring, Piston, Comp., Top, .030" O.S. 210495 Ring, Piston, Compression, Center, .030" O.S. 210497 Ring, Piston, Oil, .030" O.S.	1
27	26026	Lock - Piston Pin	1
28	298909	Pin Assembly - Piston - Std.	1
	298908	Pin Assembly - Piston - .005" O.S.	1
29	294367	Rod Assy. - Connecting Note: For Connecting Rod with .020" undersize Crankpin Bore - order No. 296079.	1
30	220670	Dipper - Connecting Rod	1
31	220756	Lock - Connecting Rod Screw	1
32	92296	Screw - Connecting Rod	1
33	296676	Valve - Exhaust (Grooved Stem Includes Retainer No. 93312)	
34	296677	Valve - Intake (Grooved Stem Includes Retainer No. 93312)	1
35	260552	Spring - Intake Valve	1
36	26478	Spring - Exhaust Valve	1
40	93312	Retainer - Valve Spring	1
45	230173	Tappet - Valve	1
46	211337	Gear - Cam	1
297	91811	Locknut - Exhaust Elbow	1
300	89966	Muffler - Exhaust	1
306	220478	Shield - Cylinder	1
307	93042	Screw - Cylinder Shield Mounting Sem	1
308	220581	Cover - Cylinder Head	1
337	298809	Plug - Spark (with gasket)	1
358	297275	Gasket Set	1
526	93343	Screw - Tank Bracket Mounting Sem	1
527	221279	Clamp - Breather Tube	1
528	230634	Tube - Breather	1
529	67608	Grommet - Breather Tube	1

*Included in Gasket Set - Part No. 297275.

PRODUCT CHANGES

In an effort to make improvements available to TORO owners as quickly as possible, minor changes are incorporated into Toro's products from time to time that do not become immediately shown in the Parts Catalog. If such a change apparently has been made in your unit, which is not reflected in your manual, see your TORO distributor or his Authorized TORO Service Dealer for information and part numbers.

IMPORTANT ORDERING INSTRUCTIONS

Repair parts are available from your Authorized TORO Service Dealer. To insure getting correct parts without delay, furnish the following information:

1. Serial number of your tiller as shown on the name plate.
2. Part number, description, and quantity of each part required.
3. State whether parts should be shipped by mail or express. All repair parts are shipped F.O.B. Factory.
4. Name and address where parts are to be shipped.
5. Do not order by reference number; use part number only.

THE TORO PROMISE

It is Toro's policy to design and produce TORO products to provide our customers with a high level of performance and durability in normal operation. Our products, however, are produced in high volume, and it is inevitable that occasionally a unit will reach a customer with a defect in materials or workmanship which causes that unit to fall below the normal high level of TORO performance. Invariably, such a defect will be noticed in a residential product within one year, and in an institutional product within ninety days after purchase. Recognizing this possibility, Toro has established a simple guarantee policy and procedure that is intended to assure customer satisfaction. This guarantee statement is as follows:

The Toro Promise

The Toro Company promises to repair any TORO product for the original purchaser if defective in materials or workmanship. The following time periods from the date of purchase apply:

Residential products	1 year
Residential products used commercially	45 days
Institutional products	90 days

The costs of parts and labor are included, but the customer pays the transportation costs. Just return any residential product to an Authorized TORO Service Dealer, or any institutional product to a TORO distributor.

Should you feel that a product is defective, and wish to rely on The Toro Promise, the following procedure is recommended:

1. Contact any TORO dealer or distributor, but preferably the dealer or distributor from whom you purchased the product.
2. He will instruct you to either return the product to him, or tell you the name and address of your nearest Authorized TORO Service Dealer if the product is to be returned to such dealer.
3. Take the product and your original sales slip, or other evidence of purchase date, to the servicing dealer.
4. The servicing dealer will inspect the unit, advise you whether the product is defective and, if so, make all repairs necessary to correct the defect without extra charge to you.

If for any reason you are dissatisfied with the dealer's analysis of the defect or the service he performs, we urge you to contact us. Write:

TORO "Customer Care" Department
8111 Lyndale Avenue South
Bloomington, Minnesota 55420

MAINTENANCE RECORD
