Form No. 3325-105 Rev A

TORO®

ProLine 21-inch Recycler®

Walk Power Lawn Mower

Model No. 22170—210000001 and Up
Model No. 22171—210000001 and Up

Operator's Manual

Contents

	Page
Introduction	2
Safety	3
General Lawn Mower Safety	3
Safety and Instruction Decals	5
Assembly	6
Installing the Handle	6
Installing the Starter Rope	6
Installing the Discharge Tunnel Plug	6
Before Starting	7
Filling the Crankcase with Oil	7
Filling the Fuel Tank with Gasoline	7
Operation	8
Controls	9
Starting the Engine	9
Stopping the Engine	9
Using the Self-propel Drive	9
Using the Discharge Tunnel Plug	10
Adjusting the Cutting Height	10
Using the Grass Bag	10
Operating Tips	12
Maintenance	13
Recommended Maintenance Schedule	13
Checking the Engine Oil Level	14
Cleaning the Underside of the Lawn Mower Housing	14
Cleaning the Discharge Tunnel and Plug	14
Servicing the Air Filter	15
Changing the Engine Oil	15
Maintaining the Cutting Blade	16
Emptying the Fuel Tank and Cleaning the Fuel Filter	17
Cleaning under the Belt Cover	18
Lubricating the Pivot Arms	18
Adjusting the Self-propel Drive	18
Servicing the Spark Plug	18
Lubricating the Gear Case	19
Adjusting the Blade Brake Cable	19
Servicing the Wheels	20
Changing the Oil Filter	20
Storage	21
Preparing the Fuel System	21
Preparing the Engine	21
General Information	21
Removing the Lawn Mower from Storage	21
Accessories	22
Troubleshooting	22
The Toro Total Coverage Guarantee	24

Warning

The engine exhaust from this product contains chemicals known to the State of California to cause cancer, birth defects, or other reproductive harm.

Introduction

Read this manual carefully to learn how to operate and maintain your product properly. The information in this manual can help you and others avoid injury and product damage. Although Toro designs and produces safe products, you are responsible for operating the product properly and safely.

Whenever you need service, genuine Toro parts, or additional information, contact an Authorized Service Dealer or Toro Customer Service and have the model and serial numbers of your product ready. Figure 1 illustrates the location of the model and serial numbers on the product.

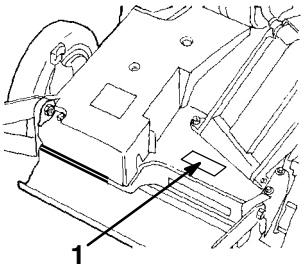

Figure 1

1. Location of the model and serial numbers

Write the product model and serial numbers in the space below:

Model No. _____

Serial No. _____

This manual identifies potential hazards and has special safety messages that help you and others avoid personal injury and even death. ***Danger***, ***Warning***, and ***Caution*** are signal words used to identify the level of hazard. However, regardless of the hazard, be extremely careful.

Danger signals an extreme hazard that *will* cause serious injury or death if you do not follow the recommended precautions.

© 2000 by The Toro Company

8111 Lyndale Avenue South
Bloomington, MN 55420-1196

All Rights Reserved
Printed in the USA

Warning signals a hazard that *may* cause serious injury or death if you do not follow the recommended precautions.

Caution signals a hazard that may cause minor or moderate injury if you do not follow the recommended precautions.

This manual uses two other words to highlight information. **Important** calls attention to special mechanical information and **Note:** emphasizes general information worthy of special attention.

Safety

This lawn mower meets or exceeds the CPSC blade safety requirements for walk-behind rotary lawn mowers and the B71.4 specifications of the American National Standards Institute in effect at the time of production.

Improperly using or maintaining this lawn mower can result in injury. To reduce the potential for injury, comply with these safety instructions.

Toro designed and tested this lawn mower for to offer reasonably safe service; however, *failure to comply with the following instructions may result in personal injury.*

Warning

Engine exhaust contains carbon monoxide, an odorless, deadly poison that can kill you.

Do not run the engine indoors or in an enclosed area.

To ensure maximum safety, best performance, and to gain knowledge of the product, it is essential that you and any other operator of the lawn mower read and understand the contents of this manual before the engine is ever started. Pay particular attention to the safety alert symbol ⚠ which means *caution*, *warning*, or *danger* — "personal safety instruction." Read and understand the instruction because it has to do with safety. Failure to comply with the instruction may result in personal injury.

General Lawn Mower Safety

This lawn mower is capable of amputating hands and feet and of throwing objects. Failure to observe the following safety instructions could result in serious injury or death.

Training

- Read this operator's manual carefully. Be thoroughly familiar with the controls and the proper use of the lawn mower before starting it.
- Never allow children to operate the lawn mower. Local regulations may restrict the age of the operator.
- Never allow adults unfamiliar with these instructions to operate the lawn mower.
- Never mow while people (especially children) or pets are nearby. Stop the lawn mower if anyone enters the area.
- Tragic accidents can occur if the operator is not alert to the presence of children. Children are often attracted to the lawn mower and the mowing activity. Never assume that children will remain where you last saw them.
- Keep children out of the mowing area and under the watchful care of a responsible adult.
- Be alert and turn the lawn mower off if children enter the area.
- Use extra care when approaching blind corners, shrubs, trees, or other objects that may obscure vision.
- Keep in mind that the operator or user is responsible for accidents or hazards occurring to other people or their property.
- See the manufacturer's instructions for proper operation and installation of accessories. Use only the accessories that are approved by the manufacturer.

Preparation

- Thoroughly inspect the area where you will use the lawn mower, and remove all stones, sticks, wires, bones, and other foreign objects.
- While mowing, always wear substantial footwear and long trousers.
- Do not operate the lawn mower when barefoot or wearing open sandals.
- Always wear safety goggles or safety glasses with side shields when operating the lawn mower.
- Warning: Gasoline is highly flammable. Take the following precautions:
  - Store fuel in containers specifically designed for this purpose.
  - Refuel outdoors only and do not smoke while refuelling.
  - Add fuel before starting the engine. Never remove the cap of the fuel tank or add gasoline while the engine is running or when the engine is hot.
  - If gasoline is spilled, do not attempt to start the engine. Move the lawn mower away from the area of spillage to avoid creating any source of ignition until the gasoline vapors have dissipated.

- Replace all fuel tank and container caps securely.
- If you must drain the fuel from the fuel tank, do it outdoors.

- Replace faulty mufflers.
- Before using, always visually inspect the blades, blade bolts, and cutter assembly for wear or damage. Replace worn or damaged blades and bolts in sets to preserve balance.
- On multibladed lawn mowers, use care as rotating one blade can cause the other blades to rotate.

Operation

- Do not operate the engine in a confined space where dangerous carbon monoxide fumes can collect.
- Mow only in daylight or in good artificial light.
- Always be sure of your footing on slopes.
- Walk; never run.
- Keep a firm hold on the handle.
- For wheeled rotary lawn mowers, mow across the face of slopes, never up and down.
- Exercise extreme caution when changing the direction on slopes.
- Do not mow excessively steep slopes.
- Use extreme caution when reversing or pulling the lawn mower toward you.
- Before and while moving backward, look behind and down for small children.
- Stop the blade(s) if you must tilt the lawn mower for transportation when crossing surfaces other than grass and when transporting the lawn mower to and from the area to be mowed.
- Never operate the lawn mower with damaged or missing guards or shields, or without safety devices (such as deflectors and grass catchers) in place.
- Do not change the speed settings on the engine.
- Disengage all blade and drive clutches before starting the engine.
- Start the engine carefully according to instructions and with feet well away from the blade(s).
- Do not tilt the lawn mower when starting the engine, unless you must tilt the lawn mower to start it. In this case, do not tilt it more than absolutely necessary and lift only the part which is away from the operator.
- Do not start the engine when standing in front of the discharge chute.
- Do not put your hands or feet near or under rotating parts. Keep clear of the discharge opening at all times.
- Never pick up or carry a lawn mower while the engine is running.
- Stop the engine and disconnect the spark-plug wire:
  - before clearing blockages or unclogging the chute;
  - before checking, cleaning, or working on the lawn mower;
  - after striking a foreign object. Inspect the lawn mower for damage and make repairs before starting and operating the lawn mower; and
  - if the lawn mower starts to vibrate abnormally (check it immediately).
- Stop the engine:
  - whenever you leave the lawn mower; and
  - before refuelling.
- Reduce the throttle setting during engine run-out and, if the engine has a shutoff valve, turn the fuel off after mowing.
- Stop the blade(s) when crossing gravel drives, walks, or roads.
- Shut the engine off and wait until the blade comes to a complete stop before removing the grass catcher.
- Do not operate the lawn mower while under the influence of alcohol or drugs.
- If the lawn mower should start to vibrate abnormally, stop the engine and check immediately for the cause. Vibration is generally a warning of trouble.

Slopes are a major factor related to slip and fall accidents which can result in a severe injury. If you feel uneasy on a slope, do not mow it.

- Watch for holes, ruts, or bumps. Tall grass can hide obstacles.
- Do not mow near drop-offs, ditches, or embankments. You could lose your footing or balance.
- Do not mow on wet grass. Reduced footing could cause slipping.

Maintenance and Storage

- Keep all nuts, bolts (especially blade attachment bolts), and screws tight to ensure that the lawn mower is in safe working condition.
- Never store the lawn mower with gasoline in the tank inside a building where fumes may reach an open flame or spark.

- Allow the engine to cool before storing the lawn mower in any enclosure.
- To reduce the fire hazard, keep the engine, muffler, battery compartment, and gasoline storage area free of grass, leaves, or excessive grease.
- Check the grass catcher frequently for wear or deterioration.
- Replace worn or damaged parts.
- Use extra care when handling gasoline; gasoline vapors are explosive.
- Never tamper with safety devices. Check their proper operation regularly.
- Keep the lawn mower free of grass, leaves, or other debris buildup. Clean up any oil or fuel that spills.
- Stop and inspect the lawn mower if you strike an object. Repair the lawn mower, if necessary, before starting the engine.
- Never attempt to make wheel height adjustments while the engine is running.
- Grass catcher components are subject to wear, damage, and deterioration, which could expose moving parts or allow objects to be thrown. Frequently check the components and replace them with the manufacturer's recommended parts when necessary.
- Lawn mower blades are sharp and can cut. Wrap the blade(s) or wear gloves, and use extra caution when servicing them.
- Do not change the speed settings on the engine.
- If you must drain the fuel from the fuel tank, do it outdoors.
- To ensure the best performance and safety, purchase only genuine Toro replacement parts and accessories.
- Maintain or replace safety and instruction decals when necessary.

Safety and Instruction Decals

Safety decals and instructions are easily visible to the operator and are located near any area of potential danger. Replace any decal that is damaged or lost.

On Mower Housing (Part No. 71-1280)



On Mower Housing (Part No. 39-5770)



On Mower Housing for Model 22170 (Part No. 92-1779)



On Handle for Model 22171 (Part No. 83-2380)



On Belt Cover for Model 22171 (Part No. 74-1970)

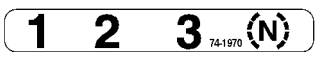

On Belt Cover for Model 22170 (Part No. 52-2610)

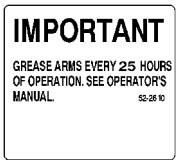

On Belt Cover for Model 22171 (Part No. 52-2620)

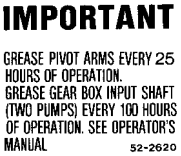

On Discharge Tunnel (Part No. 93-7398)

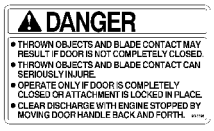

On Handle (Part No. 98-4387)

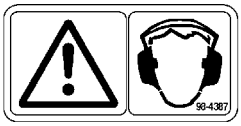

On Plug



Assembly

Note: Determine the left and right sides of the machine from the normal operating position.

Installing the Handle

1. Mount the handle to the outside of the lawn mower housing (using the bottom hole) with two 5/16-18 x 1-1/4 in. (8 mm x 31 mm) cap screws, washers, and thin nylon insert locknuts.
2. Secure the handle latches to the handle with two 5/16–18 x 1-1/2 in. (8 mm x 38 mm) cap screws, washers, and nylon insert locknuts (Fig. 2).

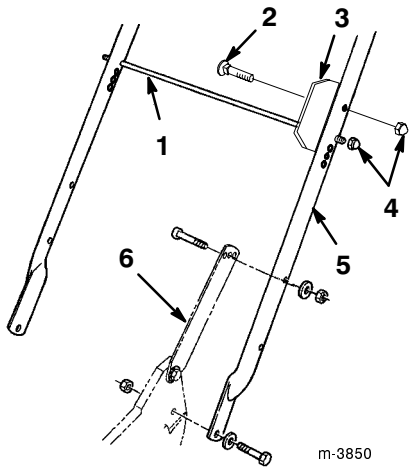

Figure 2

1. Bag support rod
2. Carriage bolt
3. Bag aligning plate
4. Cap locknuts
5. Handle
6. Handle latch

Note: You can adjust the handle height for comfortable operation. Stand behind the handle to determine the height. To adjust the handle height, position the cap screws and the locknuts that secure the handle latches to the handle into the other mounting holes in the latches.

3. Slide the bag support rod through the bag aligning plate and into the second from the top mounting holes in the handle and secure each end with a cap locknut (Fig. 2).
4. Install the carriage bolt through the bag aligning plate and the top hole on the left side of the handle, and secure it with a cap locknut.
5. Use a cable tie to secure the control cables to the left handle below the bag support rod.

Installing the Starter Rope

Pull the starter rope through the rope guide on the handle (Fig. 3).

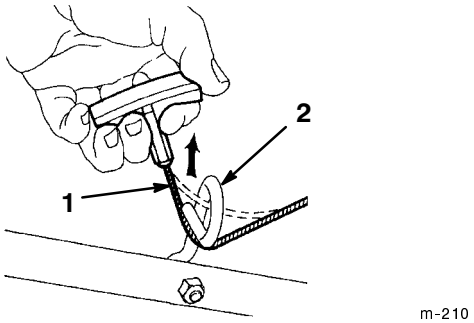

Figure 3

1. Starter rope
2. Rope guide

Note: To make the rope easier to install, squeeze the control bar on the handle.

Installing the Discharge Tunnel Plug

1. Open the discharge door by pulling forward on the handle and moving it rearward (Fig. 4). Hold the discharge door handle to prevent the spring-loaded door from closing while you insert the plug.

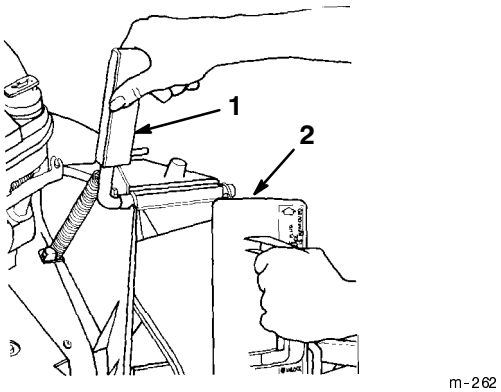

Figure 4

1. Discharge door handle
2. Plug rotated clockwise

2. Since the plug is slightly wider than the discharge tunnel opening, rotate the plug clockwise slightly while inserting it (Fig. 4).

   Note: Ensure that the arrow on the plug decal points upward.

3. Push the plug all the way in until the spring clip on the bottom of the plug clicks into place, locking the plug securely into the discharge tunnel (Fig. 5).

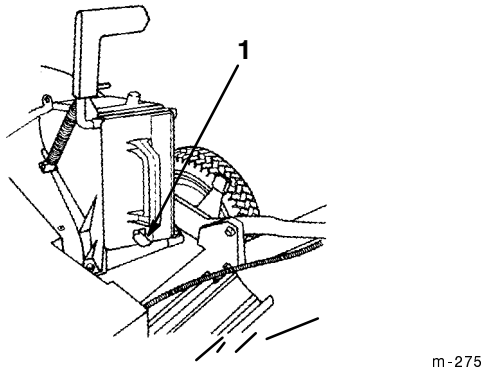

Figure 5

1. Spring clip

4. Release the discharge door handle to lock the top of the plug.

Before Starting

Filling the Crankcase with Oil

Initially, fill the crankcase with 26 ounces (0.75 liters) of oil. Use only high-quality SAE 30 or SAE 10W30 weight detergent oil that has the American Petroleum Institute (API) service classification SF, SG, SH, or SJ.

Before each use, ensure that the oil level is between the *Add* and *Full* marks on the dipstick (Fig. 6).

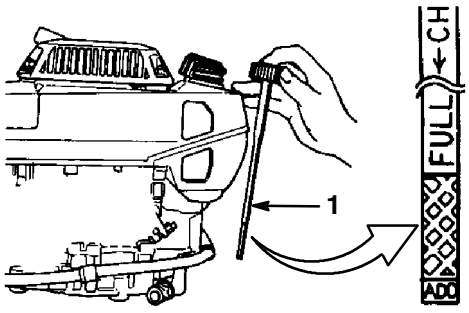

Figure 6

1. Dipstick

Note: When the crankcase is empty, pour about three-fourths of the crankcase capacity of oil in the crankcase, then follow the procedure in this section.

To add oil:

1. Move the lawn mower to a level surface.
2. Clean around the dipstick (Fig. 6).
3. Remove the dipstick by rotating the cap counterclockwise and pulling it out.
4. Wipe the dipstick clean with a clean cloth.
5. Insert the dipstick into the filler neck, then remove it.

Note: To ensure an accurate oil level reading, you must fully install the dipstick.

6. Read the oil level on the dipstick (Fig. 6).
7. If the oil level reading is below the *Add* mark on the dipstick, **slowly** pour only enough oil into the filler hole to raise the oil level to the *Full* mark on the dipstick.

Important Do not overfill the crankcase with oil and run the engine; engine damage will result. Drain the excess oil until the oil level on the dipstick reads *Full*.

8. Insert the dipstick into the filler neck and rotate the cap clockwise until it is tight.

Oil Capacity	
With Oil Filter	26 ounces (0.8 qt. or 0.75 l)
Without Oil Filter	19 ounces (0.6 qt. or 0.55 l)

Filling the Fuel Tank with Gasoline

For best results, use clean, fresh, lead-free gasoline, including *oxygenated* or *reformulated* gasoline, with an octane rating of 87 or higher. To ensure freshness, purchase only the quantity of gasoline that you expect to use in 30 days. Using unleaded gasoline results in fewer combustion deposits and longer engine life. You may use leaded gasoline if unleaded gasoline is not available.

Important Do not add oil to the gasoline.

Important Do not use methanol, gasoline containing methanol, gasohol containing more than 10% ethanol, premium gasoline, or white gas. Using these fuels can damage the engine's fuel system.

Important Do not use gasoline that is more than 30 days old.

Danger

In certain conditions, gasoline is extremely flammable and highly explosive. A fire or explosion from gasoline can burn you and others and can damage property.

- **Fill the fuel tank outdoors, in an open area, and when the engine is cold. Wipe up any gasoline that spills.**
- **Do not fill the fuel tank completely full. Add gasoline to the fuel tank until the level is 1/4 to 1/2 in. (6 to 13 mm) below the bottom of the filler neck. This empty space in the tank allows the gasoline to expand.**
- **Never smoke when handling gasoline, and stay away from an open flame or where a spark may ignite the gasoline fumes.**
- **Store gasoline in an approved fuel container and keep it out of the reach of children.**
- **Never buy more than a 30-day supply of gasoline.**

Danger

When fueling, under certain circumstances, a static charge can develop, igniting the gasoline. A fire or explosion from gasoline can burn you and others and damage property.

- **Always place gasoline containers on the ground and away from your vehicle before filling.**
- **Do not fill gasoline containers inside a vehicle or on a truck or trailer bed because interior carpets or plastic truck bed liners may insulate the container and slow the loss of any static charge.**
- **When practical, remove gasoline-powered equipment from the truck or trailer and refuel the equipment with its wheels on the round.**
- **If this is not possible, then refuel such equipment on a truck or trailer from a portable container, not from a gasoline dispenser nozzle.**
- **If you must use a gasoline dispenser nozzle, keep the nozzle in contact with the rim of the fuel tank or container opening at all times until fueling is complete.**

Use a fuel stabilizer/conditioner regularly during operation and storage. A stabilizer/conditioner cleans the engine during operation and prevents gum-like varnish deposits from forming in the engine during periods of storage.

Important Do not use fuel additives other than a fuel stabilizer/conditioner. Do not use fuel stabilizers with an alcohol base such as ethanol, methanol, or isopropanol.

1. Clean around the fuel tank cap (Fig. 7).

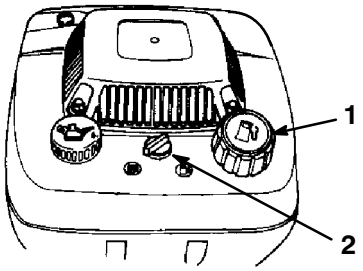

Figure 7

1. Fuel tank cap
2. Fuel valve

2. Remove the cap from the tank.
3. Fill the fuel tank with unleaded gasoline to within 1/4 to 1/2 inch (6 to 13 mm) from the top of the tank. **Do not fill into the filler neck.**

Important Do not fill the tank more than 1/4 inch (6 mm) from the top of the tank because the gasoline must have room to expand.

4. Install the fuel tank cap and wipe up any spilled gasoline.

Operation

Note: Determine the left and right sides of the machine from the normal operating position.

Each time before you mow, make sure that the self-propel drive and the blade control bail operate properly. When you release the blade control bail, the engine and the blade should stop. If they do not, contact an Authorized Service Dealer.

Caution

This machine produces sound levels in excess of 85dBA at the operator's ear and can cause hearing loss through extended periods of exposure.

Wear hearing protection when operating this machine.

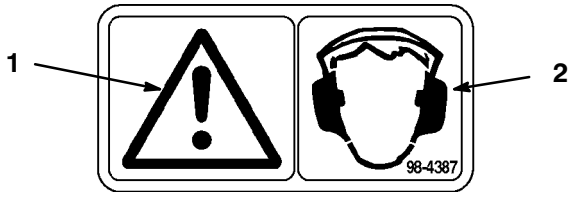

Figure 8

1. Caution
2. Wear hearing protection

Controls

The blade control bail, the throttle control, and the starter handle are on the upper handle as shown in Figure 9.

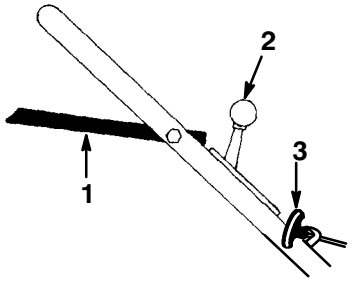

Figure 9

1. Blade control bail
2. Throttle
3. Starter handle

Starting the Engine

1. Connect the wire to the spark plug (Fig. 10).

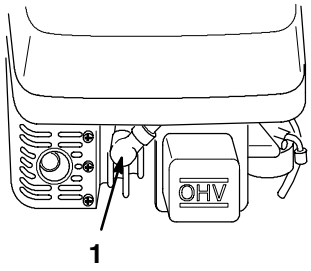

Figure 10

1. Spark-plug wire

2. Open the fuel valve (Fig. 7).

3. Move the throttle control to the (*Choke*) position (Fig. 9).

4. Pull the starter handle (Fig. 9) lightly until you feel resistance, then pull it sharply.

5. Regulate the throttle and the ground speed control as desired when the engine starts.

Note: If the engine fails to start after three pulls, repeat steps 3 through 5.

Stopping the Engine

Release the blade control bail. Both the engine and the blade should stop. If they do not, contact an Authorized Service Dealer.

Using the Self-propel Drive

Self-propel Model only

The lawn mower has three ground speeds. *1* is slow, *2* is medium, and *3* is fast. The ground speed control is located at the rear of the belt cover (Fig. 11).

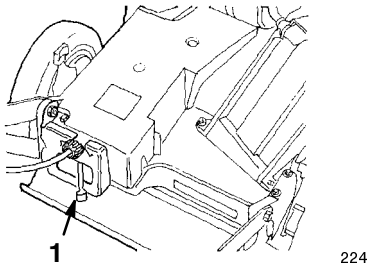

Figure 11

1. Ground speed control

1. Move the ground speed control to the Ⓝ (*Neutral*) position.
2. Start the engine.
3. Squeeze the control bar against the handle to the *Run*/*Drive* position (Fig. 12).

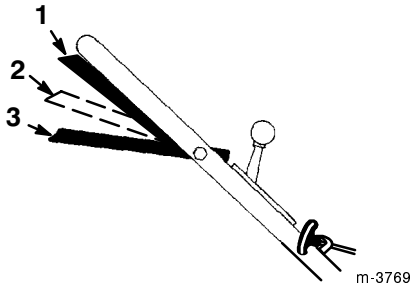

Figure 12

1. *Run/Drive* position
2. *Run/Shift* position
3. *Stop* position

Note: Do not shift speeds while you squeeze the control bar against the handle in the *Run*/*Drive* position; this can damage the transmission. Move the control bar to the *Run*/*Shift* position (Fig. 12) when you change the ground speed.

Note: You can vary the ground speed by increasing or decreasing the distance between the control bar and the handle. Lower the control bar to slow the lawn mower when making a turn or if the lawn mower is moving too fast for you. If you lower the control bar too far, the lawn mower stops self-propelling. Squeeze the control bar closer to the handle to increase the ground speed. When you hold the control bar tight against the handle, the lawn mower self-propels at the maximum ground speed. Move the ground speed control to the Ⓝ (*Neutral*) position when you use the lawn mower for trimming and whenever you leave the lawn mower.

Using the Discharge Tunnel Plug

1. Stop the engine and wait for all moving parts to stop.
2. Insert the plug; refer to Installing the Discharge Tunnel Plug on page 6.
3. To remove the plug, move the discharge door handle rearward and lift up the spring clip on the bottom of the plug. When the plug is unlocked, pull it out of the discharge tunnel.

Note: When grass is thick and lush, clippings may collect on and around the discharge tunnel plug. This may make removing the plug difficult. Clean the plug thoroughly after each use.

Adjusting the Cutting Height

Each wheel is adjusted individually with a wheel height adjustment lever. Cutting heights are 1 inch (25 mm), 1-1/2 inches (38 mm), 2 inches (51 mm), 2-1/2 inches (64 mm), 3 inches (76 mm), and 3-1/2 inches (89 mm).

Danger

Adjusting the cutting height levers could bring your hands into contact with a moving blade and result in serious injury.

- **Stop the engine and wait for all movement to stop before adjusting the cutting height.**
- **Do not put your fingers under the housing when adjusting the cutting height.**

1. Pull the wheel height adjustment lever toward the wheel (Fig. 13) and move it to the desired setting.

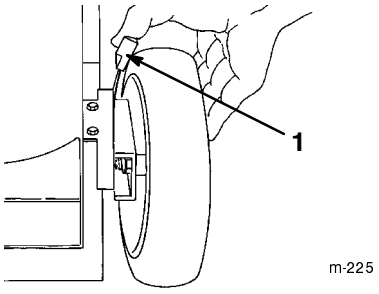

Figure 13

1. Wheel height adjustment lever

2. Release the wheel height adjustment lever and seat it securely in the notch.
3. Adjust all the wheels to the same cutting height setting.

Using the Grass Bag

Occasionally, you may wish to use the grass bag for bagging extra long grass, lush grass, or leaves.

Installing the Grass Bag

1. Stop the engine and wait for all moving parts to stop.

2. Ensure that the discharge door handle is fully forward and that the pin is engaged in the catch (Fig. 14).

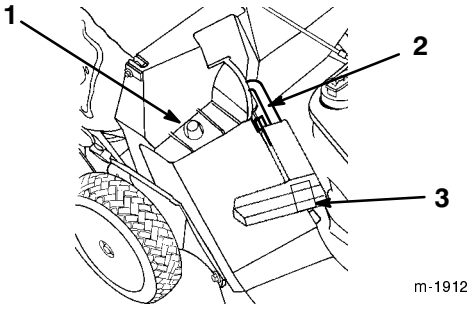

Figure 14

1. Bag frame on retaining post
2. Pin engaged in catch
3. Handle fully forward. Discharge door closed.

3. Slide the hole in the bag frame onto the retaining post on the discharge tunnel (Fig. 14).
4. Set the rear of the bag frame onto the bag support rod.
5. Pull the discharge door handle forward until the pin clears the catch, and move the handle rearward until the pin locks in the bag notch (Fig. 15).

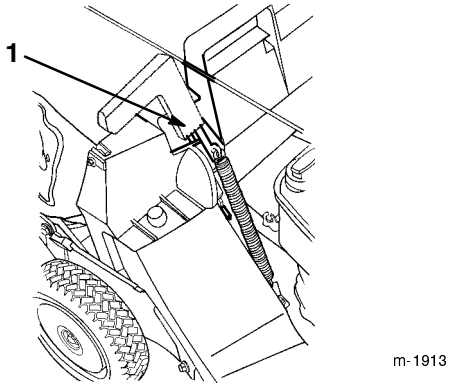

Figure 15

1. Pin locked in bag notch

Note: The discharge door in the lawn mower housing is now open.

Mowing with the Grass Bag

Warning

A worn grass bag could allow small stones and other similar debris to be thrown in the operator's or bystander's direction and result in serious personal injury or death to the operator or bystanders.

Check the grass bag frequently. If it is damaged, install a new Toro replacement bag.

Cut the grass until the bag is full.

Important Do not overfill the bag.

Removing the Grass Bag

1. Stop the engine and wait for all moving parts to stop.
2. Raise the discharge door handle and move it forward to engage the pin with the catch (Fig. 14).
3. Grasp the handles at the front and the rear of the bag and lift the bag off the lawn mower.
4. Gradually tip the bag forward to empty the clippings.
5. To install the bag, refer to Installing the Grass Bag on page 10.

Danger

If the discharge door does not close completely, the lawn mower could throw objects, causing serious personal injury or death.

If you cannot close the door because the grass clippings clog the discharge area, stop the engine and gently move the discharge door handle back and forth until you can close the door completely. If you still cannot close the door, remove the obstruction with a stick, not your hand.

Danger

The lawn mower can throw grass clippings and other objects through an open discharge tunnel. Objects thrown with enough force could cause serious personal injury or death to the operator or bystander.

Never open the door on the discharge tunnel when the engine is running.

Operating Tips

- Review the safety instructions and read this manual carefully before operating the lawn mower.
- Clear the area of sticks, stones, wire, branches, and other debris that the blade could hit and throw.
- Keep everyone, especially children and pets, away from the area of operation.
- Avoid striking trees, walls, curbs, or other solid objects. Never deliberately mow over any object.
- If the lawn mower strikes an object or starts to vibrate, immediately stop the engine, disconnect the wire from the spark plug, and examine the lawn mower for damage.
- Maintain a *sharp blade* throughout the cutting season. Periodically file down nicks on the blade.
- Replace the blade when necessary with an original Toro replacement blade.
- Mow only dry grass or leaves. Wet grass and leaves tend to clump on the yard and can cause the lawn mower to plug or the engine to stall.

Warning

Wet grass or leaves can cause serious injury if you slip and contact the blade.

Mow only in dry conditions.

- Clean the underside of the lawn mower deck after each mowing. See Cleaning the Underside of the Lawn Mower Housing on page 14.
- Keep the engine in good running condition.
- Set the engine speed to the fastest position for the best cutting results.

Warning

Operating a lawn mower with its engine running at a speed greater than the factory setting can cause the lawn mower to throw a part of the blade or engine into the operator's or bystander's area and result in serious personal injury or death.

- **Do not change the engine speed setting.**
- **If you suspect the engine speed is faster than normal, contact an Authorized Service Dealer.**

- Clean the air filter frequently. Mulching stirs up more clippings and dust which clogs the air filter and reduces engine performance.

Cutting Grass

- Grass grows at different rates at different times of the year. In the summer heat, it is best to cut grass at the 2 inch (51 mm), 2-1/2 inch (64 mm), or 3 inch (76 mm) cutting height settings. Cut only about a third of the grass blade at a time. Do not cut below the 2 inch (51 mm) setting unless the grass is sparse or it is late fall when grass growth begins to slow down.
- When cutting grass over six inches (15 cm) tall, first mow at the highest cutting height setting and walk slower; then mow again at a lower setting for the best lawn appearance. If the grass is too long and the leaves clump on top of the lawn, the lawn mower may plug and cause the engine to stall.
- Alternate the mowing direction. This helps disperse the clippings over the lawn for even fertilization.

If the finished lawn appearance is unsatisfactory, try one or more of the following:

- Sharpen the blade.
- Walk at a slower pace while mowing.
- Raise the cutting height on your lawn mower.
- Cut the grass more frequently.
- Overlap cutting swaths instead of cutting a full swath with each pass.
- Set the cutting height on the front wheels one notch lower than the rear wheels. For example, set the front wheels at 2 inches (51 mm) and the rear wheels at 2-1/2 inches (64 mm).

Cutting Leaves

- After cutting the lawn, ensure that half of the lawn shows through the cut leaf cover. You may need to make more than one pass over the leaves.
- For light leaf coverage, set all the wheels at the same cutting height setting.
- If there are more than five inches (12.7 cm) of leaves on the lawn, set the front cutting height one or two notches higher than the rear cutting height. This makes it easier to feed the leaves under the lawn mower deck.
- Slow down your mowing speed if the lawn mower does not cut the leaves finely enough.
- If you mow over oak leaves, you can add lime to the grass in the spring to reduce the acidity of the oak leaves.

Maintenance

Note: Determine the left and right sides of the machine from the normal operating position.

Recommended Maintenance Schedule

Maintenance Service Interval	Maintenance Procedure
Each Use	• Check the engine oil level. • Check the stopping time of the blade brake. The blade must stop within three seconds of releasing the bail; if it does not, contact an Authorized Service Dealer for repair. • Remove grass clippings and dirt from under the housing. • Clean the discharge tunnel and the discharge tunnel plug.
5 Hours	• Check the blade and the engine mounting fasteners. Tighten loose fasteners.
25 Hours	• Clean the foam pre-cleaner of the air cleaner.
50 Hours	• Change the engine oil (without the oil filter).[1] • Sharpen or replace the blade; maintain it more frequently if the edge dulls quickly in rough or in sandy conditions. • Check for leaks in the fuel system and/or a deteriorating fuel hose. Replace parts if necessary. • Clean the fuel filter. • Remove grass clippings and debris from under the belt cover. • Lubricate the pivot arms (self-propel model only).
75 Hours	• Adjust the self-propel drive system (self-propel model only).
100 Hours	• Change the engine oil and the oil filter. • Inspect the spark plug and replace it if necessary. • Clean the cooling system; remove grass clippings, debris, or dirt from the engine air cooling fins and starter. Clean the system more frequently in dirty or high-chaff conditions. • Lubricate the gear case (self-propel model only). • Adjust the blade brake cable. • Service the wheels.
150 Hours	• Replace the paper air filter. Replace it more frequently in dusty operating conditions.
Storage	• Empty the fuel tank before repairs as directed or before storage.

[1]Change the engine oil after the first eight operating hours.

Important Refer to your engine operator's manual for additional maintenance procedures.

Caution

If you leave the wire on the spark plug, someone could accidently start the engine and seriously injure you or other bystanders.

Disconnect the wire from the spark plug before you do any maintenance. Set the wire aside so that it does not accidently contact the spark plug.

Checking the Engine Oil Level

Before you use the lawn mower, make sure that the oil level is between the *Add* and the *Full* marks as shown on the dipstick (Fig. 6). If the oil level is below the *Add* mark, and oil. Refer to Filling the Crankcase with Oil on page 7.

Cleaning the Underside of the Lawn Mower Housing

To ensure the best performance, keep the underside of the lawn mower housing clean. Be especially careful to keep the kickers free of debris (Fig. 16).

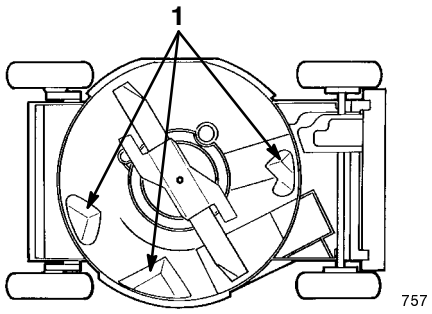

Figure 16

1. Kickers

Washing Method

1. Position the lawn mower on a flat concrete or asphalt surface near a garden hose.
2. Start the engine.
3. Hold the running garden hose at handle level and direct the water to flow on the ground just in front of the right rear tire (Fig. 17).

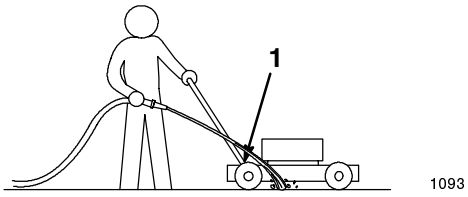

Figure 17

1. Rear right wheel

Note: The blade will draw in water and wash out clippings. Let the water run until you no longer see clippings being washed out from under the housing.

4. Stop the engine and wait for all moving parts to stop.
5. Turn off the garden hose.
6. Start the lawn mower and let it run for a few minutes to dry out the moisture on the lawn mower and its components.

Scraping Method

If washing does not remove all debris from under the lawn mower, scrape it clean.

1. Disconnect the wire from the spark plug (Fig. 10).
2. Drain the fuel from the fuel tank. Refer to Emptying the Fuel Tank and Cleaning the Fuel Filter on page 17.

Warning

Tipping the lawn mower may cause the fuel to leak from the carburetor or the fuel tank. Gasoline is extremely flammable, highly explosive, and, under certain conditions, can cause personal injury or property damage.

Avoid fuel spills by running the engine dry or by removing the gasoline with a hand pump; never siphon.

3. Tip the lawn mower onto its **right** side (air filter up) (Fig. 16).
4. Remove the dirt and grass clippings with a hardwood scraper. Avoid burrs and sharp edges.
5. Turn the lawn mower upright.
6. Fill the fuel tank.
7. Connect the wire to the spark plug.

Cleaning the Discharge Tunnel and Plug

Remove the plug from the discharge tunnel and clean it after each use.

Always be sure that the discharge tunnel door closes securely when you release the handle. If the debris prevents the discharge door from closing securely, clean the inside of the discharge tunnel and the door thoroughly.

Warning

Grass clippings and other objects can be thrown from an open discharge tunnel and cause serious injury or kill the operator or bystanders.

Never start or operate the lawn mower unless *one* of the following is true:

- **The discharge tunnel plug is locked securely in the discharge tunnel.**
- **The grass bag is locked in place.**
- **The optional side discharge chute is locked in place.**
- **The discharge tunnel door is locked in place.**

Servicing the Air Filter

Clean the foam pre-cleaner every 25 operating hours. Replace the paper air filter once every season or every 150 operating hours; replace it more frequently in dusty conditions.

Important Do not operate the engine without the air filter assembly; extreme engine damage will occur.

1. Stop the engine and wait for all moving parts to stop.
2. Disconnect the wire from the spark plug (Fig. 10).
3. Remove the bolt that secures the air cleaner cover (Fig. 18).

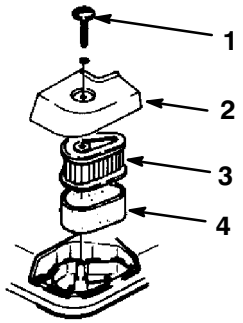

Figure 18

1. Bolt
2. Cover
3. Paper air filter
4. Foam pre-cleaner

4. Remove the cover and clean it thoroughly (Fig. 18).
5. Remove the foam pre-cleaner and wash it with a mild detergent and water, then blot it dry (Fig. 18).
6. Saturate the pre-cleaner with oil, then squeeze it (do not twist) to remove the excess oil.
7. Remove the paper air filter and discard it (Fig. 18).

Important Do not try to clean a paper filter.

8. Install the foam pre-cleaner on the new paper air filter.
9. Install the air cleaner assembly.
10. Install the cover and secure it with the bolt.

Changing the Engine Oil

Change the oil after the first **eight** operating hours and then after every 50 operating hours (without the oil filter), and every 100 operating hours (with the oil filter).

1. Run the engine to warm the engine oil.

   Note: Warm oil flows better and carries more contaminants.

Warning

Oil may be hot after engine has been run, and contact with hot oil can cause severe personal injury.

Avoid contacting the hot engine oil when you drain it.

2. Stop the engine and wait for all moving parts to stop.
3. Disconnect the wire from the spark plug (Fig. 10).
4. Place a suitable drain pan under the side oil drain plug.
5. Raise the left side of the lawn mower at least 12 inches (30 cm) and open the side oil drain plug (Fig. 19).

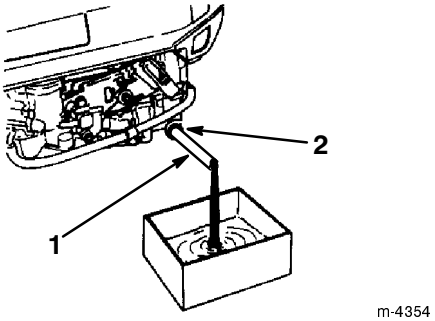

Figure 19

1. Oil drain tube
2. Side oil drain plug

6. Insert the oil drain tube over the drain plug and lower the lawn mower (Fig. 19).
7. Raise the **right** side of the lawn mower (air filter up) to drain the oil into the drain pan.

8. Lower the right side of the lawn mower.

9. Remove the oil drain tube and tighten the side oil drain plug.

Important Do not over-tighten the side oil drain plug; it may cause damage to the crankcase cover. Torque the side oil drain plug to 190 in-lb (23 N-m).

10. Recycle the used oil according to local codes.

11. Fill the crankcase to the *Full* line on the dipstick with fresh oil. Refer to the Filling the Crankcase with Oil on page 7.

12. Wipe up any spilled oil.

Maintaining the Cutting Blade

Always mow with a sharp blade. A sharp blade cuts cleanly and without tearing or shredding the grass blades.

1. Stop the engine and wait for all moving parts to stop.

2. Disconnect the wire from the spark plug (Fig. 10).

3. Drain the gasoline from the fuel tank; refer to Emptying the Fuel Tank and Cleaning the Fuel Filter on page 17.

4. Tip the lawn mower onto its **right** side (air filter up) (Fig. 20).

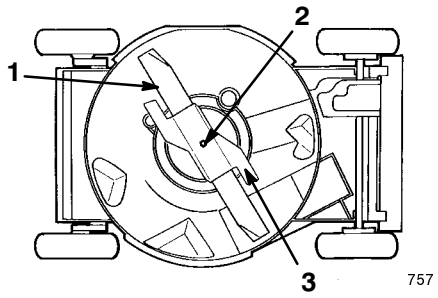

Figure 20

1. Blade
2. Bolt and lockwasher
3. Accelerator

Inspecting the Blade

Carefully examine the blade for sharpness and wear, especially where the flat and the curved parts meet (Fig. 21A). Because sand and abrasive material can wear away the metal that connects the flat and curved parts of the blade, check the blade before using the lawn mower. If you notice a slot or wear (Figs. 21B and 21C), replace the blade; refer to *Removing the Blade* on page 16.

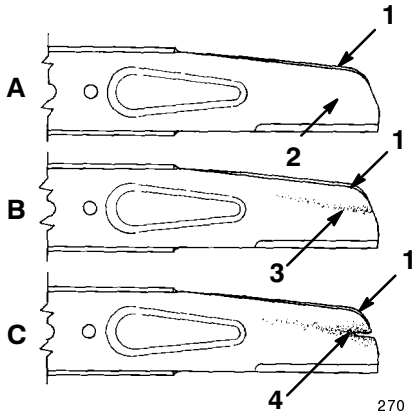

Figure 21

1. Sail
2. Flat part of blade
3. Wear
4. Slot formed

Note: For the best performance, install a new blade before the cutting season begins. During the year, file down any small nicks to maintain the cutting edge.

Danger

A worn or damaged blade can break, and a piece of the blade could be thrown into the operator's or bystander's area, resulting in serious personal injury or death.

- **Inspect the blade periodically for wear or damage.**
- **Replace a worn or damaged blade.**

Removing the Blade

1. Grasp the end of the blade using a rag or a thickly padded glove.

2. Remove the blade bolt, the lockwasher, the accelerator, and the blade (Fig. 22).

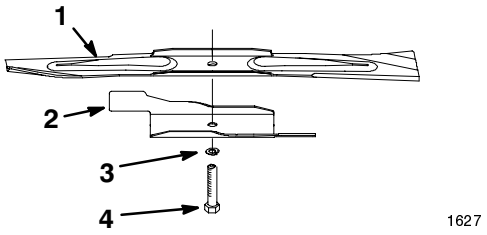

Figure 22

1. Blade
2. Accelerator
3. Lock washer
4. Blade bolt

Sharpening the Blade

File the top side of the blade to maintain its original cutting angle (Fig. 23A) and inner cutting edge radius (Fig. 23B). The blade will remain balanced if you remove the same amount of material from both cutting edges.

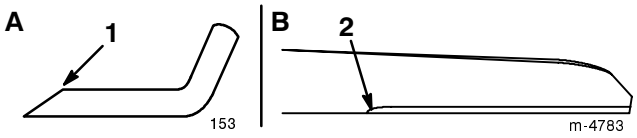

Figure 23

1. Sharpen at this angle only
2. Maintain the original radius here

Balancing the Blade

1. Check the balance of the blade by placing the center hole of the blade over a nail or screwdriver shank clamped horizontally in a vise (Fig. 24).

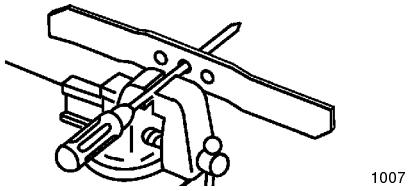

Figure 24

Note: You can also check the balance using a commercially manufactured blade balancer.

2. If either end of the blade rotates downward, file that end (not the cutting edge or the end near the cutting edge). The blade is properly balanced when neither end drops.

Installing the Blade

1. Install a sharp, balanced Toro blade, the accelerator, the lockwasher, and the blade bolt. The sail of the blade must point toward the top of the lawn mower housing for proper installation. Torque the blade bolt to 50 ft-lb (68 N·m).

Warning

Operating the lawn mower without the accelerator in place can cause the blade to flex, bend, or break, resulting in serious injury or death to the operator or bystanders.

Do not operate the lawn mower without the accelerator.

2. Return the lawn mower to its upright position.
3. Connect the wire to the spark plug.

Emptying the Fuel Tank and Cleaning the Fuel Filter

Clean the fuel filter element every 50 operating hours.

1. Stop the engine and wait for it to cool down.

Important Drain gasoline from a cold engine only.

2. Disconnect the wire from the spark plug (Fig. 10).
3. Remove the fuel tube by loosening the tube clamp at the carburetor (Fig. 25).

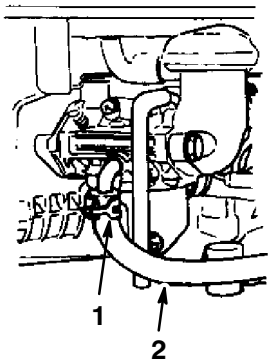

Figure 25

1. Tube clamp
2. Fuel tube

4. Open the fuel valve by turning the lever to the open position (Fig. 7).
5. Drain the gasoline completely from the tank and fuel line into an approved fuel container.
6. Remove the fuel tube on the fuel tank by loosening the tube clamp (Fig. 26).

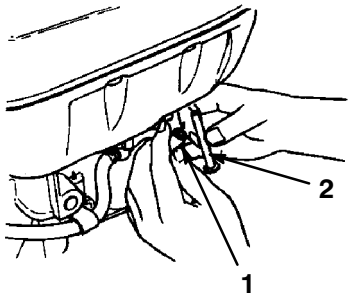

Figure 26

1. Fuel tube
2. Fuel filter

7. Remove the fuel filter from the fuel tank (Fig. 26).
8. Clean the fuel filter with high flash-point solvent.

9. Firmly install the filter, tubes, and clamps.

Cleaning under the Belt Cover

Self-propel Model only

Keep the area under the belt cover free of debris.

1. Stop the engine and wait for all moving parts to stop.
2. Remove the bolts that secure the belt cover (Fig. 27) to the lawn mower housing.

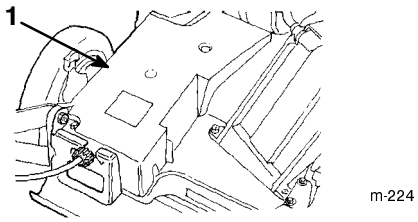

Figure 27

1. Belt cover

3. Lift off the cover and brush out all the debris around the belt area.
4. Install the belt cover.

Lubricating the Pivot Arms

Self-propel Model only

After every 50 operating hours or when the season ends, lubricate the pivot arms.

1. Move the rear wheel cutting height levers to the center setting.
2. Wipe the grease fittings with a clean rag (Fig. 28).

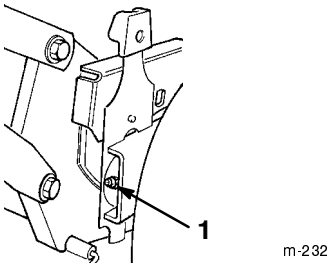

Figure 28

1. Grease fitting

3. Install a grease gun onto the fitting and gently apply two or three pumps of #2 multi-purpose lithium base grease (Fig. 28).

Note: Excessive grease pressure may damage the seals.

Adjusting the Self-propel Drive

Self-propel Model only

If the lawn mower does not self-propel or has a tendency to creep forward when the control bar is **more** than 1-1/2 inches (3.8 cm) from the handle, adjust the wheel drive control knob on the rear of the gear box.

1. Close the door in the lawn mower housing and remove the grass bag.
2. Rotate the control knob clockwise 1/2 turn if the lawn mower does not self-propel. If the lawn mower creeps forward, rotate the knob 1/2 turn counterclockwise to loosen the belt (Fig. 29).

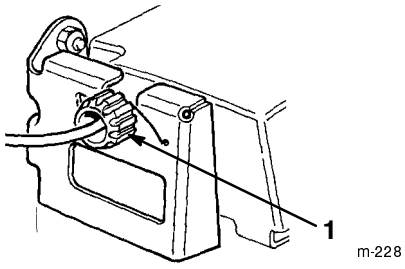

Figure 29

1. Control knob

3. Slowly pull the lawn mower backward while you gradually move the control bar toward the handle.

Note: The adjustment is correct when the rear wheels stop turning and the control bar is about one inch (2.5 cm) from the handle (Fig. 30).

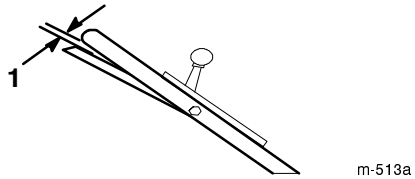

Figure 30

1. One inch (2.5 cm)

Servicing the Spark Plug

Check the spark plug after every 100 operating hours. Use an *NGK BPR5ES* spark plug or equivalent.

1. Stop the engine and wait for all moving parts to stop.
2. Disconnect the wire from the spark plug (Fig. 10).
3. Clean around the spark plug.
4. Remove the spark plug from the cylinder head.

Important Replace a cracked, fouled, or dirty spark plug. Do not clean the electrodes because grit entering the cylinder can damage the engine.

5. Set the gap on the plug to 0.030 in. (0.76 mm) (Fig. 31).

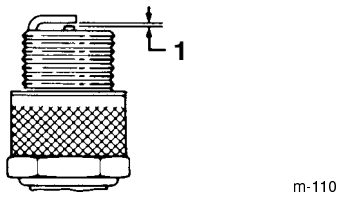

Figure 31

1. 0.030 in. (0.76 mm)

6. Install the spark plug and the gasket seal.
7. Torque the plug to 17 ft-lb (23 N·m).
8. Connect the wire to the spark plug.

Lubricating the Gear Case

Self-propel Model only

After every 100 operating hours, grease the gear case.

1. Remove the grass bag.
2. Install a grease gun onto the fitting through the belt cover opening (Fig. 32).

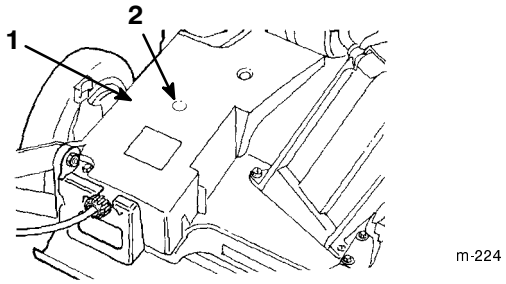

Figure 32

1. Belt cover
2. Grease fitting

3. Gently apply one to two pumps of #2 multi-purpose lithium-base grease.
4. Install the grass bag.

Adjusting the Blade Brake Cable

Whenever you install a new blade brake cable assembly, adjust it.

1. Stop the engine and wait for all moving parts to stop.
2. Disconnect the wire from the spark plug (Fig. 10).
3. Check the adjustment of the cable by moving the control bar toward the handle until you remove the slack in the cable. The gap between the brake lever and the handle must be between 3/16 and 1/4 in. (5 and 6 mm). To adjust the cable, go to step 4.
4. To adjust the cable, do the following:

Hand-push Model

A. Loosen the jam nut on the blade brake cable (Fig. 33).

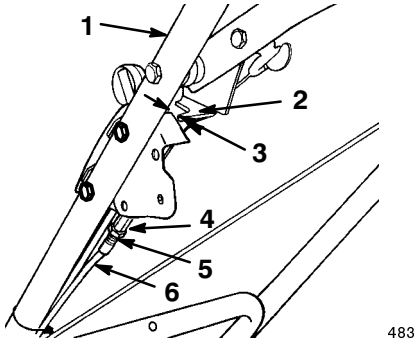

Figure 33

1. Handle
2. Brake lever
3. 3/16 to 1/4 in. (5 to 6 mm)
4. Cable adjuster
5. Jam nut
6. cable conduit

B. Insert a 3/16 to 1/4 in. (5 to 6 mm) object between the brake lever and the handle.

C. Turn the cable adjuster on the brake cable until you remove the slack.

D. Tighten the nut.

Self-propel Model

A. Loosen the nut on the cable bracket (Fig. 34).

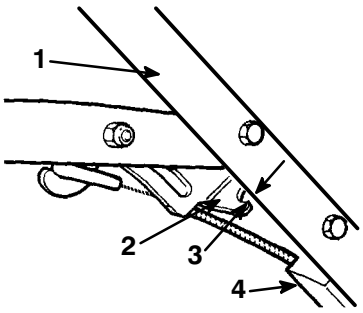

Figure 34

1. Handle
2. Brake lever
3. 3/16 to 1/4 in. (5 to 6 mm)
4. cable bracket

B. Insert a 3/16 to 1/4 in. (5 to 6 mm) object between the brake lever and the handle.

C. Pull down on the cable conduit until you remove the slack from the wire.

D. Tighten the nut.

Servicing the Wheels

Removing the Wheels

1. Stop the engine and wait for all moving parts to stop.
2. Disconnect the wire from the spark plug (Fig. 10).
3. Remove the cap screw, the wheel spacer, and the locknut mounting the wheel to the pivot arm (Fig. 35).

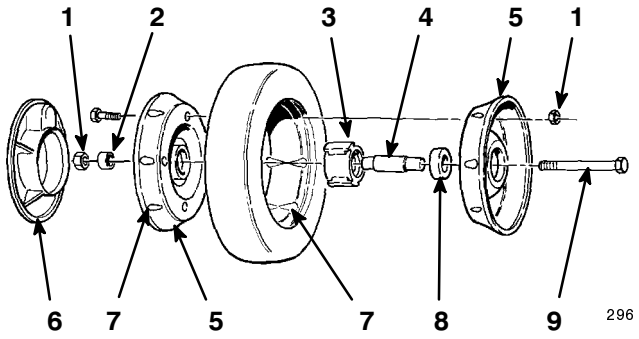

Figure 35

1. Locknuts
2. Wheel spacer
3. Bearing/hub assembly
4. Bearing spacer
5. Wheel half
6. Plastic cover (rear wheels only)
7. Lug
8. Bearing (2)
9. Cap screw

4. Separate the wheel halves from the tire by removing four cap screws and four locknuts (Fig. 35).

Note: If you remove the bearings from the bearing/hub assembly, remove them by pressing on the bearing spacer (Fig. 35).

Assembling the Wheels

1. Position the tire onto one wheel half, aligning the lugs on each (Fig. 35).
2. Place the bearing/hub assembly into the center hole of the wheel half. Ensure that the legs of the hub are positioned over the flange of the hole (Fig. 35).
3. Place the other wheel half onto the bearing/hub assembly, aligning the wheel and the tire lugs and the mounting holes (Fig. 35).
4. Using two 1/4–20 x 1.50 in. (6 x 38 mm) fully threaded screws or bolts and non-locking nuts, loosely secure the wheel halves together. Mount the screws or bolts in the opposing holes (Fig. 35).
5. Check the alignment of all parts and tighten the screws, alternating from side to side for a uniform fit, until the wheel halves are drawn together (Fig. 35).
6. Install the two cap screws and two locknuts previously removed in the remaining holes in the wheel halves and tighten. Remove the two long screws or bolts and replace them with two cap screws and two locknuts (Fig. 35).
7. Install the wheel to the pivot arm with the cap screws, a spacer, and a locknut. Ensure that the spacer is positioned between the wheel hub and the pivot arm (Fig. 35).

Changing the Oil Filter

Change the oil filter every 100 operating hours.

1. Run the engine to warm the oil.

Warning

Oil may be hot after engine has been run, and contact with hot oil can cause severe personal injury.

Avoid contacting the hot engine oil when you drain it.

2. Stop the engine and wait for all moving parts to stop.
3. Disconnect the wire from the spark plug (Fig. 10).
4. Drain the engine oil; refer to Changing the Engine Oil on page 15.
5. Place a suitable drain pan under the oil filter connection (Fig. 36).

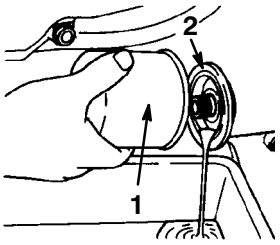

Figure 36

1. Oil filter
2. Mounting surface

6. Rotate the oil filter counterclockwise to remove it.
7. Apply a film of clean engine oil onto the seal of the new oil filter.
8. Install new oil filter by rotating it clockwise until the seal contacts the mounting surface. Then rotate the oil filter 3/4 turn more by hand.

9. Fill the crankcase to the *Full* line on the dipstick with fresh oil. Refer to *Filling the Crankcase with Oil* on page 7.
10. Install the spark plug wire.
11. Run the engine for about three minutes.
12. Stop the engine, wait for all moving parts to stop, and check for oil leakage around the filter.
13. Add oil to compensate for the oil in the oil filter. Refer to Checking the Engine Oil Level on page 14.

Storage

To prepare the lawn mower for off-season storage, perform the recommended maintenance procedures. Refer to Maintenance on page 13.

Store the lawn mower in a cool, clean, dry place. Cover the lawn mower to keep it clean and protected.

Preparing the Fuel System

Warning

Gasoline can vaporize if you store it over long periods of time and explode if it comes into contact with an open flame.

- **Do not store gasoline over long periods of time.**
- **Do not store the lawn mower with gasoline in the fuel tank or the carburetor in an enclosure with an open flame. (For example, a furnace or a water heater pilot light.)**
- **Allow the engine to cool before storing it in any enclosure.**

Empty the fuel tank when mowing the last time before storing the lawn mower.

1. Run the lawn mower until the engine stops from running out of fuel.
2. Prime the engine and start it again.
3. Allow the engine to run until it stops. When you can no longer start the engine, it is sufficiently dry.

Preparing the Engine

1. While the engine is still warm, change the oil from the crankcase. Refer to Changing the Engine Oil on page 15.
2. Remove the spark plug (Fig. 10).
3. Using an oil can, add about one tablespoon of oil to the crankcase through the spark plug hole.
4. Slowly rotate the engine several times, using the starter rope, to distribute the oil.
5. Install the spark plug but **do not** connect the wire to the spark plug.

General Information

1. Clean the lawn mower housing. Refer to Cleaning the Underside of the Lawn Mower Housing on page 14.
2. Clean any dirt and chaff from the cylinder, cylinder head fins, and blower housing.
3. Remove grass clippings, dirt, and grime from the external parts of the engine, the shrouding, and the top of the lawn mower housing.
4. Check the condition of the blade. Refer to Maintaining the Cutting Blade on page 16.
5. Service the air filter; refer to Servicing the Air Filter on page 15.
6. Lubricate the pivot arms (self-propel model only); refer to Lubricating the Pivot Arms on page 15.
7. Tighten all nuts, bolts, and screws.
8. Touch up all rusted or chipped paint surfaces with paint available from an Authorized Service Dealer.

Removing the Lawn Mower from Storage

1. Check and tighten all fasteners.
2. Remove the spark plug and spin the engine rapidly using the starter to blow excess oil from the cylinder.
3. Clean the spark plug or replace it if it is cracked, broken, or if the electrodes are worn.
4. Install the spark plug and torque it to 17 ft-lb (23 N·m).
5. Perform any needed maintenance procedures; refer to Maintenance on page 13.
6. Fill the fuel in the fuel tank with fresh gasoline.
7. Check the engine oil level.
8. Connect the wire to the spark plug.

Accessories

You may purchase the following accessories from an Authorized Service Dealer:

- Side Discharge Kit
- Atomic Blade

Troubleshooting

Toro designed and built your lawn mower for trouble-free operation. Check the following components and items carefully, and refer to *Maintenance* on page 13 for more information. If a problem continues, contact an Authorized Service Dealer.

Problem	Possible Causes	Corrective Action
Engine does not start	1. The fuel tank is empty or the fuel system contains stale fuel.	1. Drain and/or fill the fuel tank with fresh gasoline. If the problem persists, contact an Authorized Service Dealer.
	2. The throttle lever is not in the *Choke* position.	2. Move the throttle lever to the *Choke* position.
	3. The wire is not connected to the spark plug.	3. Connect the wire to the spark plug.
	4. The spark plug is pitted, fouled, or the gap is incorrect.	4. Check the spark plug and adjust the gap if necessary. Replace the spark plug if it is pitted, fouled, or cracked.
Engine starts hard or loses power	1. The fuel tank contains stale fuel.	1. Drain and fill the fuel tank with fresh gasoline.
	2. The fuel cap vent hole is plugged.	2. Clean the fuel cap vent hole or replace the fuel cap.
	3. The air filter element is dirty and is restricting the air flow.	3. Clean the air filter pre-cleaner and/or replace the paper air filter.
	4. The underside of the lawn mower deck contains clippings and debris.	4. Clean the underside of the lawn mower deck.
	5. The spark plug is pitted, fouled, or the gap is incorrect.	5. Check the spark plug and adjust the gap if necessary. Replace the spark plug if it is pitted, fouled, or cracked.
	6. The engine oil level is low or the oil is dirty.	6. Check the engine oil. Change the oil if it is dirty or add oil if it is low.

Problem	Possible Causes	Corrective Action
Engine runs rough	1. The wire is not connected to the spark plug. 2. The spark plug is pitted, fouled, or the gap is incorrect. 3. The throttle lever is not in the *Fast* position. 4. The air filter element is dirty and is restricting the air flow.	1. Connect the wire to the spark plug. 2. Check the spark plug and adjust the gap if necessary. Replace the spark plug if it is pitted, fouled, or cracked. 3. Move the throttle lever to the *Fast* position. 4. Clean the air filter pre-cleaner and/or replace the paper air filter.
Lawn mower or engine vibrates excessively	1. The blade is bent or is out of balance. 2. The blade mounting nuts are loose. 3. The underside of the lawn mower deck contains clippings and debris. 4. The engine mounting bolts are loose.	1. Balance the blade. If the blade is bent, replace it. 2. Tighten the blade mounting nuts. 3. Clean the underside of the lawn mower deck. 4. Tighten the engine mounting bolts.
Uneven cutting pattern	1. All four wheels are not at the same height. 2. The blade is dull. 3. You are mowing in the same pattern repeatedly. 4. The underside of the lawn mower deck contains clippings and debris.	1. Place all four wheels at the same height. 2. Sharpen and balance the blade. 3. Change the mowing pattern. 4. Clean the underside of the lawn mower deck.
Discharge chute plugs	1. The throttle lever is not in the *Fast* position. 2. The cutting height is too low. 3. You are mowing too fast. 4. The grass is wet. 5. The underside of the lawn mower deck contains clippings and debris.	1. Move the throttle lever to the *Fast* position. 2. Raise the cutting height. 3. Slow down. 4. Allow the grass to dry before mowing. 5. Clean the underside of the lawn mower deck.
Lawn mower does not self-propel (Self-propel model only)	1. The self-propel drive cable is out of adjustment or is damaged. 2. There is debris under the belt cover.	1. Adjust the self-propel drive cable. Replace the cable if necessary. 2. Clean the debris from under the belt cover.

Gas, Cordless, Electric, and 21″ Commercial Duty Walk Mowers

The Toro Total Coverage Guarantee

A Full Warranty
(Limited Warranty for Commercial Use)

Conditions and Products Covered

The Toro Company and its affiliate, Toro Warranty Company, pursuant to an agreement between them, jointly promise to repair any Toro Product used for normal residential purposes* if defective in materials or workmanship or if it stops functioning due to the failure of a component. The following time periods apply from the date of purchase:

Products	Warranty Period
• Super Recycler® Walk Mowers	5 year full warranty
• VacuPower® Walk Mowers	5 year full warranty
• All Other Mowers	2 year full warranty
• All Batteries	1 year full warranty

This warranty includes the cost of parts and labor, but you must pay transportation costs.

This warranty applies to all gas, cordless, and electric consumer walk power mowers.

* Normal residential purposes means use of the product on the same lot as your home. Use at more than one location is considered commercial use, and the commercial use warranty would apply.

Limited Warranty for Commercial Use

Toro Walk Power Mowers used for commercial, institutional, or rental use are warranted against defects in materials or workmanship. Components failing due to normal wear are not covered by this warranty. The following time periods apply from the date of purchase:

Products	Warranty Period	
	Engine	Entire Unit
• 21″ Commercial Duty Walk Mowers	2 year limited	1 year limited
• All Other Mowers	45 day limited	45 day limited

Instructions for Obtaining Warranty Service

Should you feel your Toro Product contains a defect in materials or workmanship, contact the dealer who sold you the product or any Authorized Service Dealer or Master Service Dealer. The Yellow Pages of your telephone directory is a good reference source. The dealer will either arrange service at his/her dealership or recommend another Authorized Service Dealer who may be more convenient. You may need proof of purchase (copy of registration card, sales receipt, etc.) for warranty validation.

If for any reason you are dissatisfied with the Service Dealer's analysis of the defect in materials or workmanship or if you need a referral to a Toro Service Dealer, please feel free to contact us at:

Customer Service Department
Toro Warranty Company
8111 Lyndale Avenue South
Bloomington, MN 55420-1196
952-888-8801 or 800-421-9684

Owner Responsibilities

You must maintain your Toro Product by following the maintenance procedures described in the operator's manual. Such routine maintenance, whether performed by a dealer or by you, is at your expense.

Items and Conditions Not Covered

There is no other express warranty except for special emission system coverage on some products and the Toro Starting Guarantee on GTS Engine. This express warranty does not cover:

- Cost of regular maintenance service or parts, such as filters, fuel, lubricants, oil changes, spark plugs, blade sharpening, worn blade, cable/linkage adjustments, or brake and clutch adjustments.
- Any product or part which has been altered or misused or required replacement or repair due to accidents or lack of proper maintenance.
- Repairs necessary due to improper fuel, contaminants in the fuel system, or failure to properly prepare the fuel system prior to any period of non-use over three months.
- Repairs necessary due to improper battery care, electrical supply irregularities, or failure to properly prepare the mower prior to any period of non-use.
- Pickup and delivery charges.

All repairs covered by this warranty must be performed by an Authorized Toro Service Dealer using Toro approved replacement parts.

General Conditions

Repair by an Authorized Toro Service Dealer is your sole remedy under this warranty.

Neither The Toro Company nor Toro Warranty Company is liable for indirect, incidental or consequential damages in connection with the use of the Toro Products covered by this warranty, including any cost or expense of providing substitute equipment or service during reasonable periods of malfunction or non-use pending completion of repairs under this warranty. Some states do not allow exclusions of incidental or consequential damages, or limitations on how long an implied warranty lasts, so the above exclusions and limitations may not apply to you.

This warranty gives you specific legal rights, and you may also have other rights which vary from state to state.

Countries Other than the United States or Canada

Customers who have purchased Toro products exported from the United States or Canada should contact their Toro Distributor (Dealer) to obtain guarantee policies for your country, province, or state. If for any reason you are dissatisfied with your Distributor's service or have difficulty obtaining guarantee information, contact the Toro importer. If all other remedies fail, you may contact us at Toro Warranty Company.

Part No. 374-0000 Rev. -