1975

FORM NO. 3310-651

TORO®

MODEL NO. 58220 — 500001 & UP
MODEL NO. 58231 — 500001 & UP

PARTS CATALOG

5 H. P. TILLER

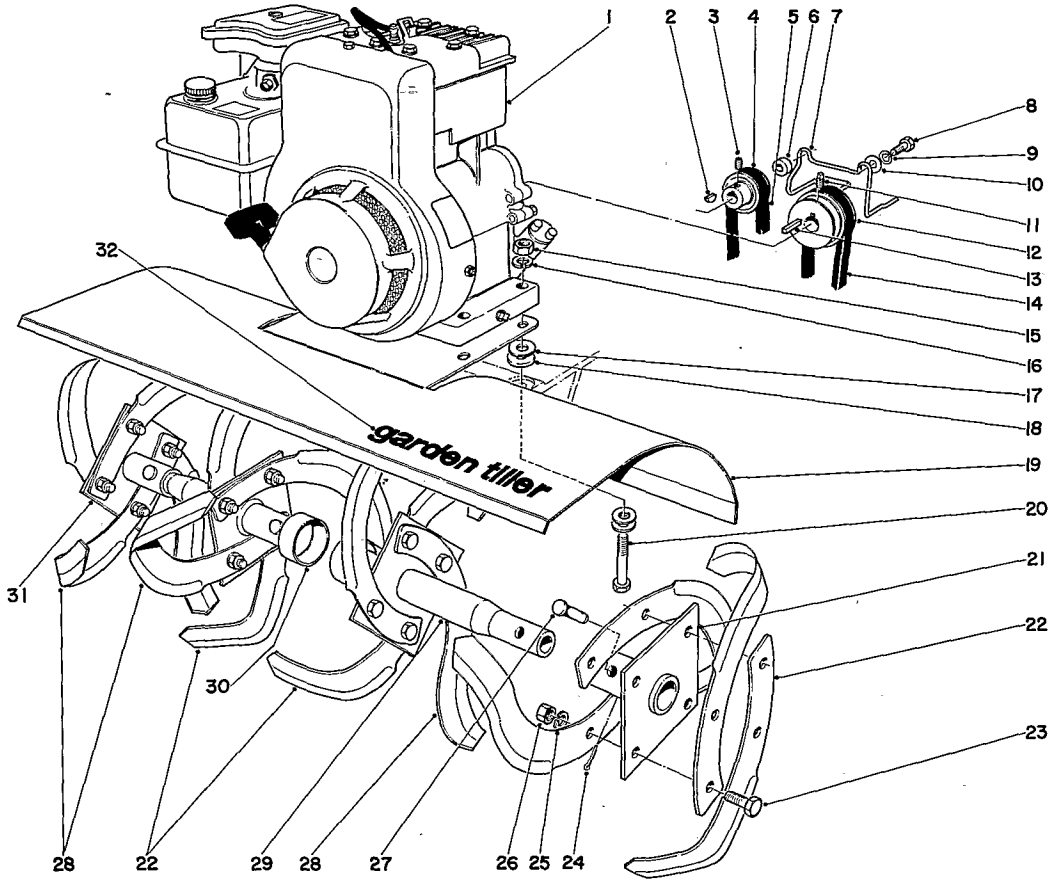

TINE AND ENGINE ASSEMBLY (Model 58220)

Ref. No.	Part No.	Description	No. Used
1	211-408	Engine	1
2	3257-24	Woodruff Key	1
3	3245-7	Set Screw	1
4	25-2170	Reverse Pulley	1
5	7-0074	Belt, Reverse	1
6	2-0780	Spacer	2
7	7-9350	Belt Guide	1
8	321-11	Capscrew	2
9	3253-3	Lockwasher	2
10	3256-2	Washer	2
11	3246-2	Set Screw	1
12	7-0070	Engine Pulley	1
13	7-0036	Key	1
14	7-0073	Belt, Forward	1
15	3217-6	Nut	4
16	3253-4	Lockwasher	4

Ref. No.	Part No.	Description	No. Used
17	3256-3	Washer	12
18	7-0081	Special Washer	4
19	7-0072	Plant Shield	1
20	322-11	Capscrew	4
21	24-6960	Axle L.H. Outer	1
22	7-0103	Tine R.H.	8
23	323-6	Capscrew	16
24	3272-7	Cotter Pin	4
25	3253-21	Lockwasher	16
26	3217-7	Nut	16
27	7-2116	Tine Pin	4
28	7-0102	Tine L.H.	8
29	24-6970	Axle L.H. Inner	1
30	24-6950	Axle R.H. Inner	1
31	24-6940	Axle R.H. Outer	1
32	17-8340	Decal	1

Copyright 1974 by
The Toro Company
Bloomington, Minnesota 55420 U.S.A.

Price $1.00

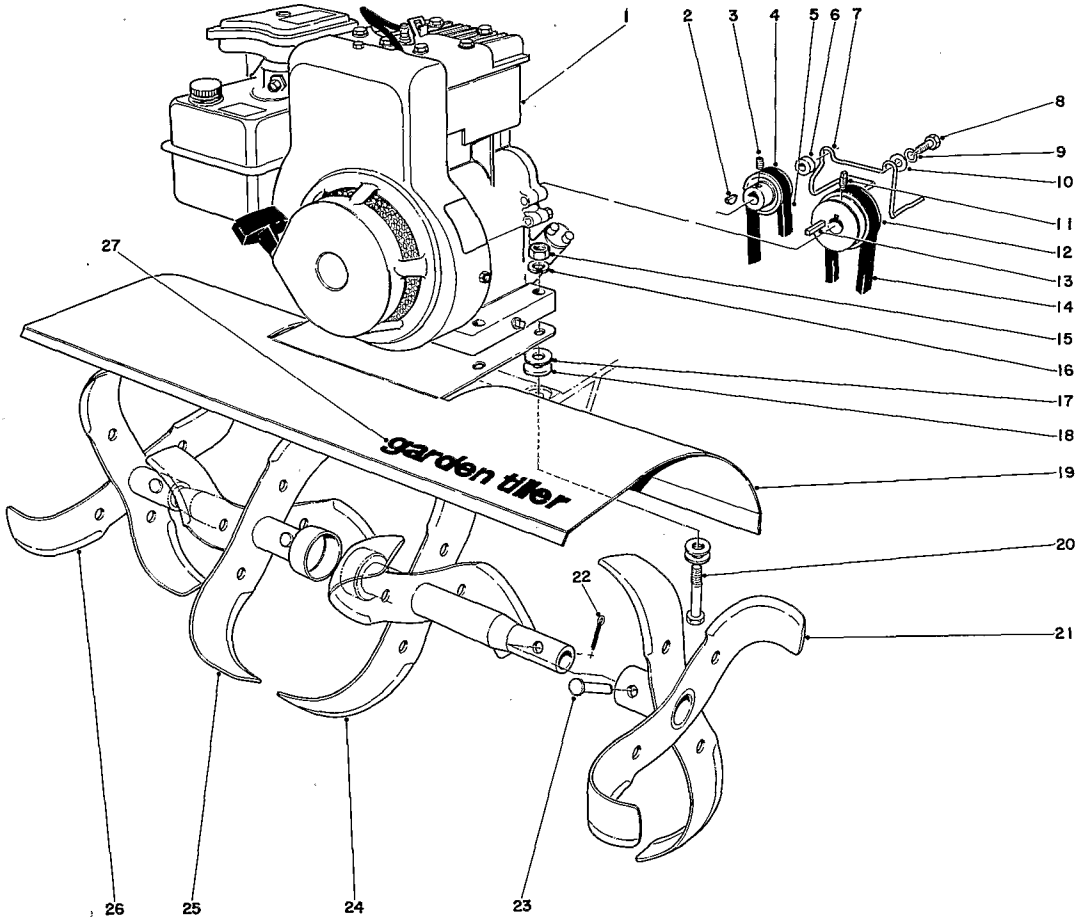

TINE AND ENGINE ASSEMBLY (MODEL 58231)

Ref. No.	Part No.	Description	No. Used
1	221-408	Engine	1
2	3257-24	Woodruff Key	1
3	3245-7	Set Screw	1
4	25-2170	Reverse Pulley	1
5	7-0074	Reverse Belt	1
6	2-0780	Spacer	2
7	7-9350	Belt Guide	1
8	321-11	Capscrew	2
9	3253-3	Lockwasher	2
10	3256-2	Washer	2
11	3246-2	Set Screw	1
12	7-0070	Engine Pulley	1
13	7-0036	Key	1
14	7-0073	Forward Belt	1

Ref. No.	Part No.	Description	No. Used
15	3217-6	Nut	4
16	3253-4	Lockwasher	4
17	3256-3	Washer	12
18	7-0081	Special Washer	4
19	7-0072	Shield	1
20	322-11	Capscrew	4
21	20-8840	Outer Tine L.H.	1
22	3272-7	Cotter Pin	4
23	7-2116	Tine Pin	4
24	20-8830	Inner Tine L.H.	1
25	20-8810	Inner Tine R.H.	1
26	20-8820	Outer Tine R.H.	1
27	17-8340	Decal	1

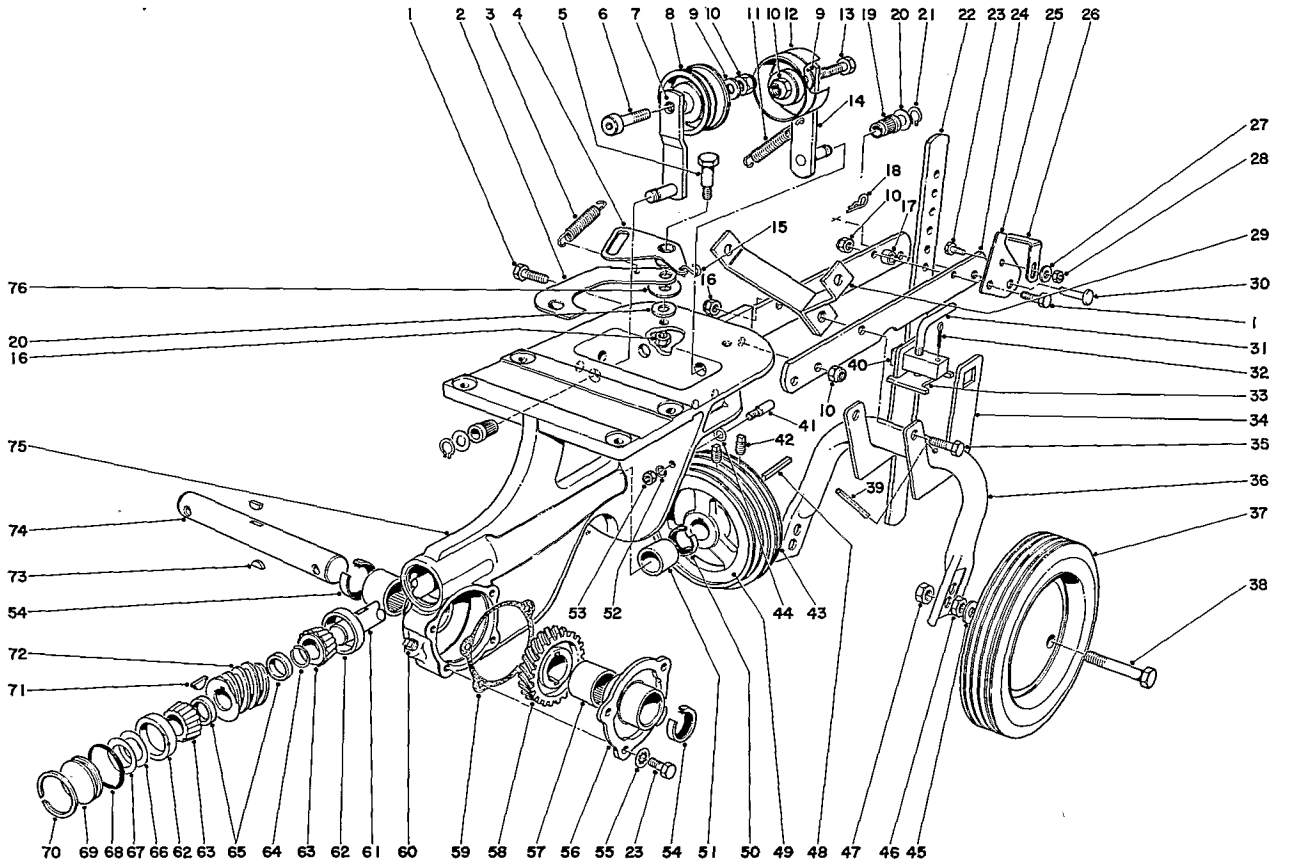

CHASSIS ASSEMBLY (Models 58220 and 58231)

Ref. No.	Part No.	Description	No. Used
1	323-8	Capscrew	3
2	7-0028	Reverse Link	1
3	7-1322	Reverse Return Spring	1
4	7-0027	Belt Crank	1
5	7-0030	Shoulder Bolt	1
6	3274-45	Socket Hd. Capscrew	1
7	7-0055	Idler Arm	1
8	7-0056	Idler Pulley	1
9	3256-24	Washer	2
10	32152-2	Nut	5
11	7-0025	Spring	1
12	7-0051	Idler Pulley	1
13	323-9	Capscrew	1
14	7-0050	Idler Arm	1
15	7-3618	S-Hook	1
16	32152-1	Locknut	2
17	17-6530	Spacer	1
18	3290-255	Hair Pin Cotter	1
19	7-0023	Idler Bearing	2
20	3256-23	Washer	4
21	32120-35	Snap Ring	2
22	7-0076	Depth Gauge	1
23	321-3	Capscrew	5
24	20-8910	Drawbar	2
25	17-8480	Latch Hinge	1

Ref. No.	Part No.	Description	No. Used
26	17-8490	Drag Bar Latch	1
27	3256-2	Flatwasher	1
28	32152-4	Hex Nut	1
29	7-9340	Handle Support	2
30	7-2116	Clevis Pin	1
31	20-8870	Jack Handle	1
32	3272-11	Cotter Pin	2
33	20-8890	Jack Plate	1
34	20-8900	Axle Saddle	2
35	322-9	Capscrew	1
36	20-8930	Axle Yoke	1
37	7-0075	Wheel	2
38	325-13	Capscrew	2
39	32121-48	Roll Pin	2
40	20-8880	Jack Nut	1
41	7-0031	Belt Guide	2
42	3246-2	Set Screw	3
43	7-0035	Pulley	1
44	3256-16	Washer	2
45	3256-6	Washer	2
46	3218-5	Jam Nut	2
47	32152-3	Locknut	2
48	7-0036	Key	2
49	7-0034	Reverse Pulley	1
50	253-84	Oil Seal	1

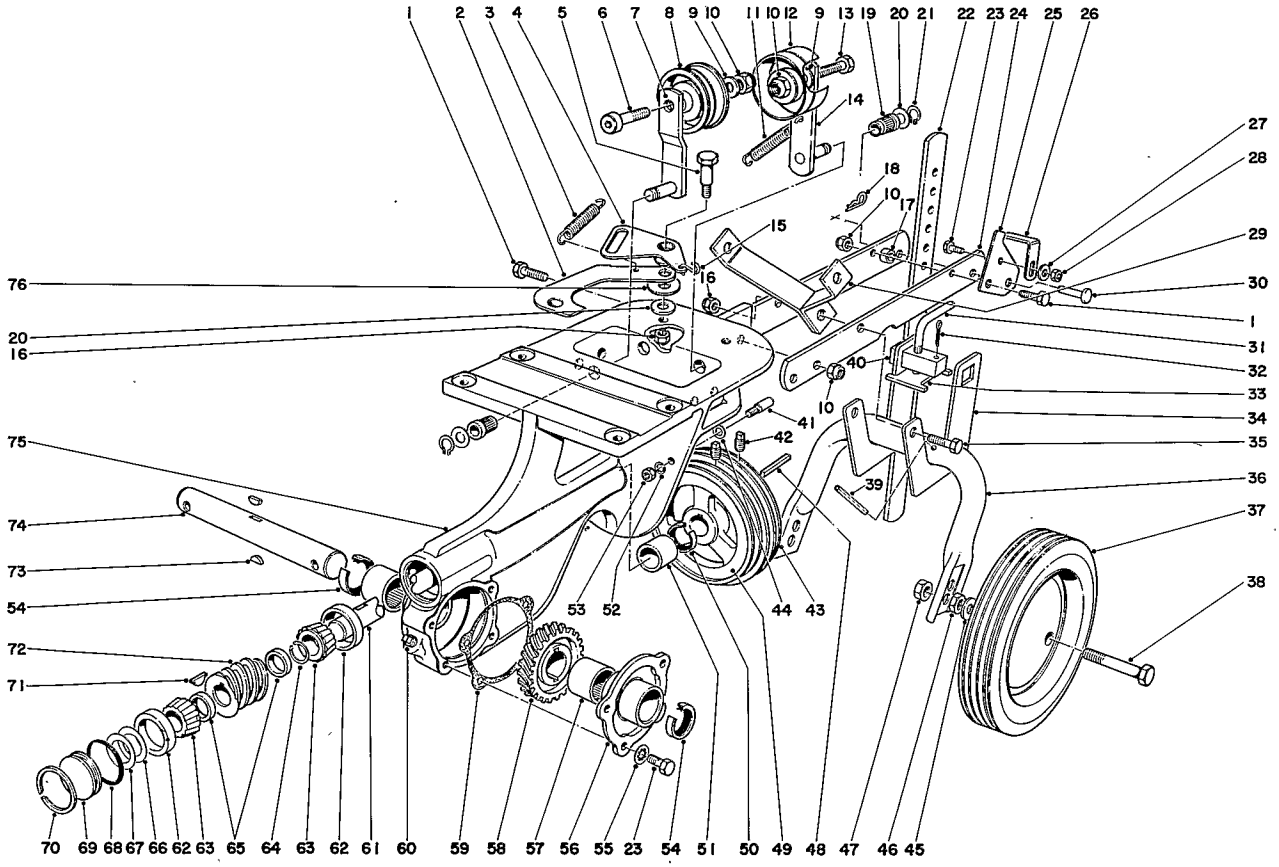

CHASSIS ASSEMBLY (Models 58220 and 58231) (Continued)

Ref. No.	Part No.	Description	No. Used
51	256-167	Bearing	1
52	3255-7	Lockwasher	2
53	3218-1	Nut	2
54	7-0045	Oil Seal	2
55	3254-8	Lockwasher	4
56	7-0048	Cover	1
57	252-52	Needle Bearing	2
58	7-0047	Worm Wheel	1
59	7-0020	Gasket	1
60	281-1	Pipe Plug	1
61	7-0012	Worm Shaft	1
62	254-79	Bearing Cup	2
63	254-78	Bearing Cone	2
64	7-0013	Snap Ring	1

Ref. No.	Part No.	Description	No. Used
65	7-0015	Spacer	2
66	23-7700	Shim .020	A/R
67	23-7690	Shim .010	A/R
68	237-71	"O" Ring	1
69	23-7710	Plug	1
70	7-0018	Snap Ring	1
71	3257-23	Woodruff Key	1
72	7-0016	Worm Gear	1
73	3257-33	Woodruff Key	2
74	7-0046	Worm Wheel Shaft	1
75	23-7720	Chassis	1
76	3256-25	Washer	2
*	6-0819	Loose Parts Bag	1

*Not Illustrated

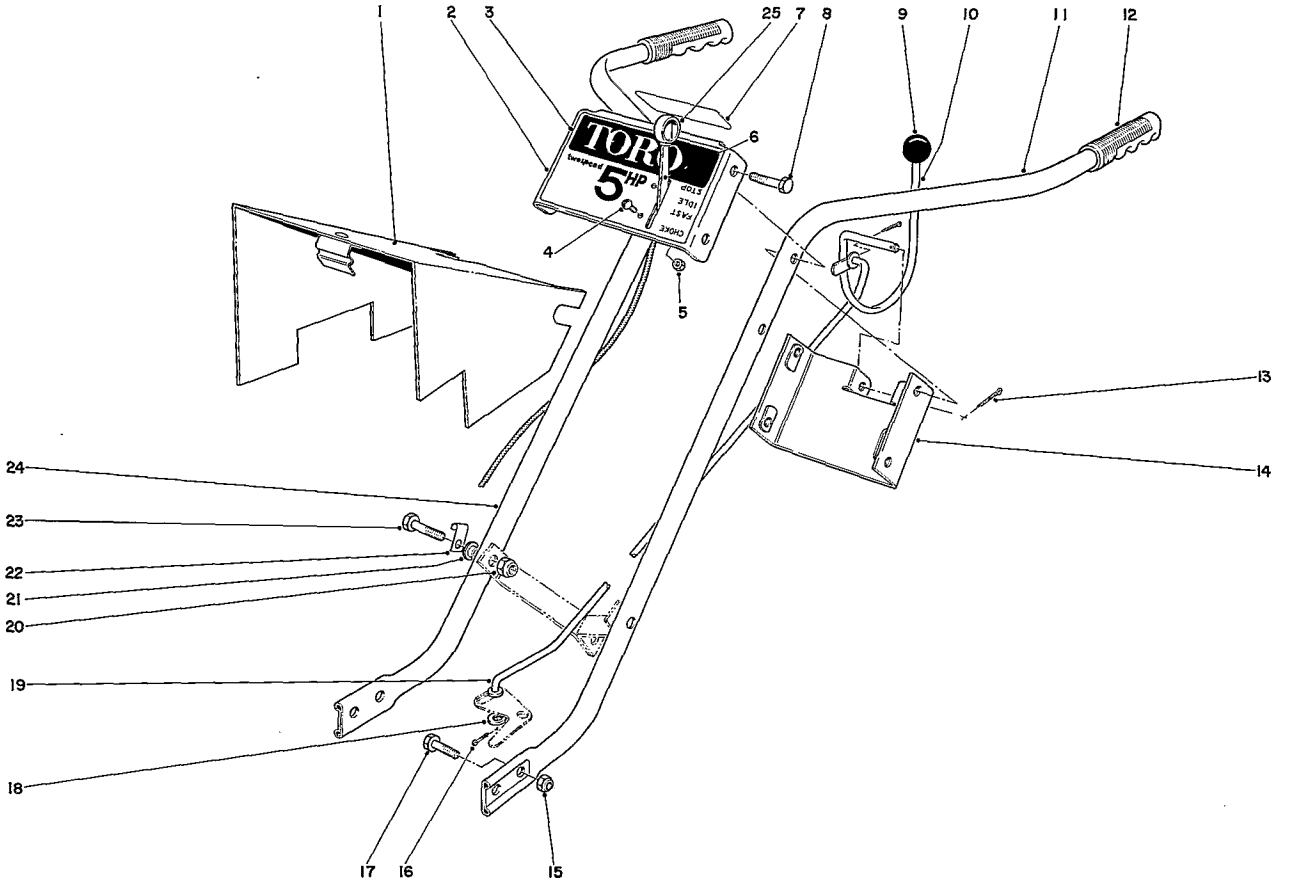

HANDLE ASSEMBLY (MODELS 58220 AND 58231)

Ref. No.	Part No.	Description	No. Used
1	7-9190	Pulley Cover	1
2	17-8580	Control Plate	1
3	17-8520	Decal, Control	1
4	3251-2	Machine Screw	2
5	32149-7	Lock Nut	2
6	17-8450	Throttle Control	1
7	7-9450	Decal, Clutch	1
8	322-9	Capscrew	4
9	233-22	Knob	1
10	7-9320	Clutch Control	1
11	7-9270	Handle L.H.	1
12	235-19	Handle Grip	2

Ref. No.	Part No.	Description	No. Used
13	3272-2	Cotter Pin	3
14	17-8460	Handle Brace	1
15	32152-2	Lock Nut	4
16	3272-7	Cotter Pin	1
17	323-6	Capscrew	4
18	3256-24	Washer	1
19	7-0078	Clutch Rod	1
20	32152-1	Lock Nut	2
21	7-2041	Bushing	2
22	7-0077	Clip	1
23	322-11	Capscrew	2
24	7-9280	Handle R.H.	1
25	233-35	Knob	1

ENGINE MODEL NO. 130292 TYPE 0159-06
BRIGGS & STRATTON

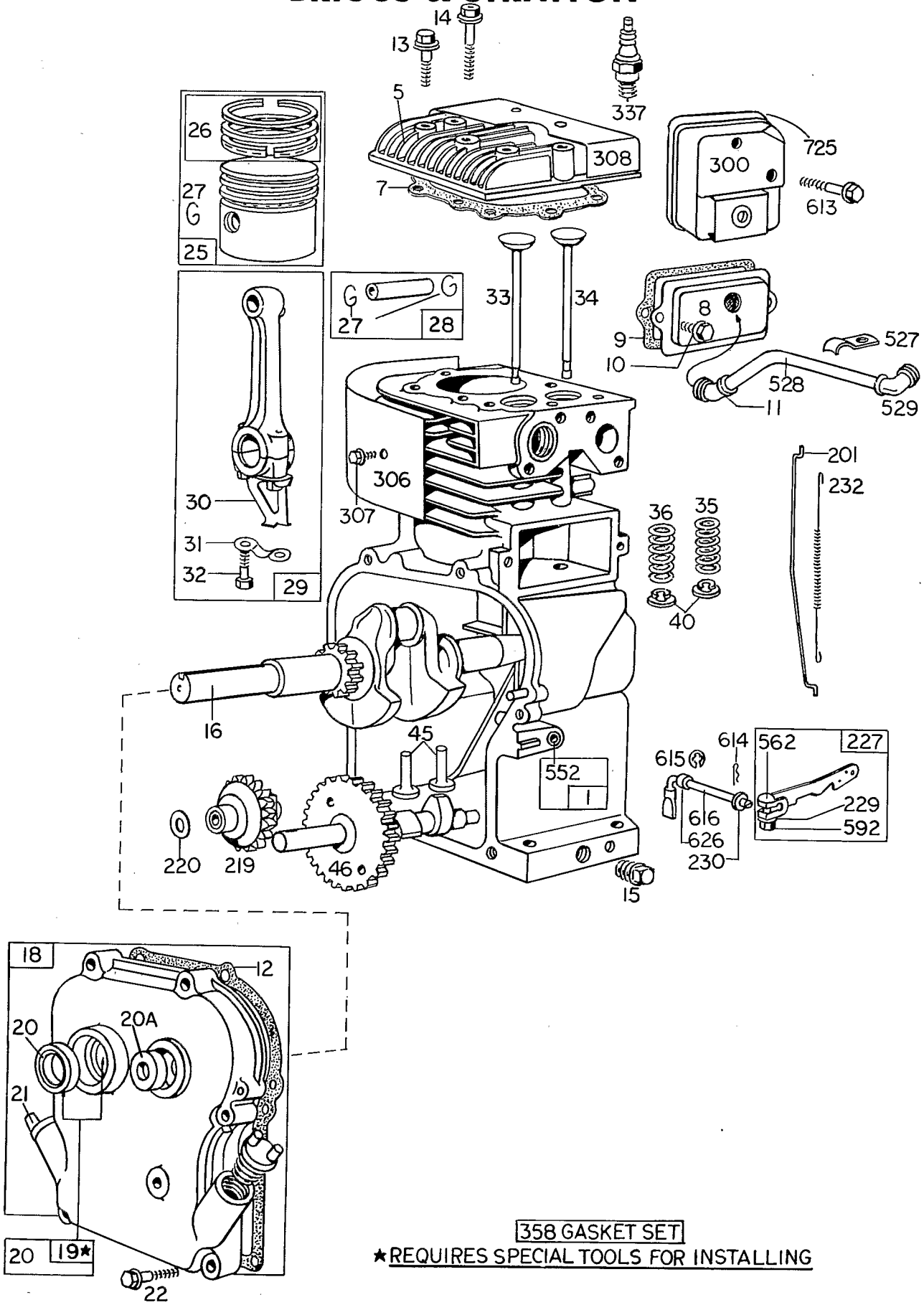

358 GASKET SET

★REQUIRES SPECIAL TOOLS FOR INSTALLING

ENGINE MODEL NO. 130292 TYPE 0159-06
BRIGGS & STRATTON

Ref. No.	Part No.	Description	No. Used
5	211542	Head - Cylinder	1
7	*270383	Gasket - Cylinder Head	1
8	294178	Breather - Valve Chamber	1
9	*27549	Gasket - Valve Cover	1
10	93394	Screw - Breather Mtg. Sem	1
11	66578	Grommet - Breather Tube	1
12	*270080	Gasket - Crankcase - .015" thick (Standard)	1
	270125	Gasket-Crankcase - .005" thick	1
	270126	Gasket-Crankcase - .009" thick	1
13	93368	Screw - Cylinder Head (2-3/32" long)	1
14	93369	Screw - Cylinder Head (2-15/32" long)	1
15	91249	Plug - Pipe, Std., Square Head	1
16	260938	Crankshaft	1
18	298183	Cover Assy. - Crankcase	1
19	297603	Bushing - Crankcase Cover	1
		Note: Requires special tools for installation.	
20	294606	Seal - Oil	1
20A	298041	Seal - Oil	1
21	66768	Plug - Oil Filler	1
22	93032	Screw - Crankcase Cover Mounting Sem	1
25	298904	Piston Assy. - Standard	1
	298905	Piston Assy. - .010" O. S.	1
	298906	Piston Assy. - .020" O. S.	1
	298907	Piston Assy. - .030" O. S.	1
26	298982	Ring Set - Standard Piston Consists of: 211467 Ring, Piston, Comp., Top, Standard 211468 Ring, Piston, Comp., Center, Standard 211469 Ring, Piston, Oil, Standard	1
	298983	Ring Set - .010" O. S. Piston Consists of: 211504 Ring, Piston, Comp., Top, .010" O. S. 211503 Ring, Piston, Comp., Center, .010" O. S. 211505 Ring, Piston, Oil, .010" O. S.	1
	298984	Ring Set - .020" O. S. Piston Consists of: 211507 Ring, Piston, Comp., Top, .020" O. S. 211506 Ring, Piston, Comp., Center, .020" O. S. 211508 Ring, Piston, Oil, .020" O. S.	1
	298985	Ring Set - .030" O. S. Piston Consists of: 211511 Ring, Piston, Comp., Top, .030" O. S. 211510 Ring, Piston, Comp., Center, .030" O. S. 211512 Ring, Piston, Oil, .030" O. S.	1
27	26026	Lock - Piston Pin	1
28	298909	Pin Assy. - Piston - Std.	1
	298908	Pin Assy. - Piston - .005" O. S.	1
29	299430	Rod Assy. - Connecting Note: For Connecting Rod with .020" undersize Crankpin Bore - order No. 390459	1
30	221890	Dipper - Connecting Rod	1
31	221876	Lock - Conn. Rod Screw	1
32	92296	Screw - Connecting Rod	1
33	211119	Valve - Exhaust	1
34	261044	Valve - Intake	1
35	260552	Spring - Intake Valve	1
36	26478	Spring - Exhaust Valve	1
40	93312	Retainer - Valve Spring	1
45	260642	Tappet - Valve	1
46	211618	Gear - Cam	1
201	260661	Link - Governor	1
219	297656	Gear - Governor	1
220	221551	Washer - Thrust	1
227	297601	Lever Assy. - Governor	1
229	220680	Washer - Governor Lever	1
230	221559	Washer - Governor Lever	1
232	260478	Spring - Governor Link	1
300	297506	Muffler-Exhaust (Direct Outlet)	1
306	221511	Shield - Cylinder	1
307	93042	Screw - Cylinder Shield Mounting Sem	1
308	221512	Cover - Cylinder Head	1
337	298809	Plug - Spark (with Gasket) Note: Spark Plugs 298809, use Ignition Cable Terminal No. 221798.	1
358	297615	Gasket Set	1
527	221514	Clamp - Breather Tube	1
528	230722	Tube - Breather	1
529	67838	Grommet - Breather Tube	1
552	230732	Bushing - Governor	1
562	92613	Bolt - Governor Lever	1
592	90356	Nut - Hex.	1
613	93377	Screw - Muffler Mounting	1
614	93306	Cotter - Hairpin	1
615	93307	Retainer - E-Ring	1
616	230723	Crank - Governor	1
626	230749	Spacer - Governor Crank	1
725	221885	Shield - Heat	1

*Included in Gasket Set - Part No. 297615.

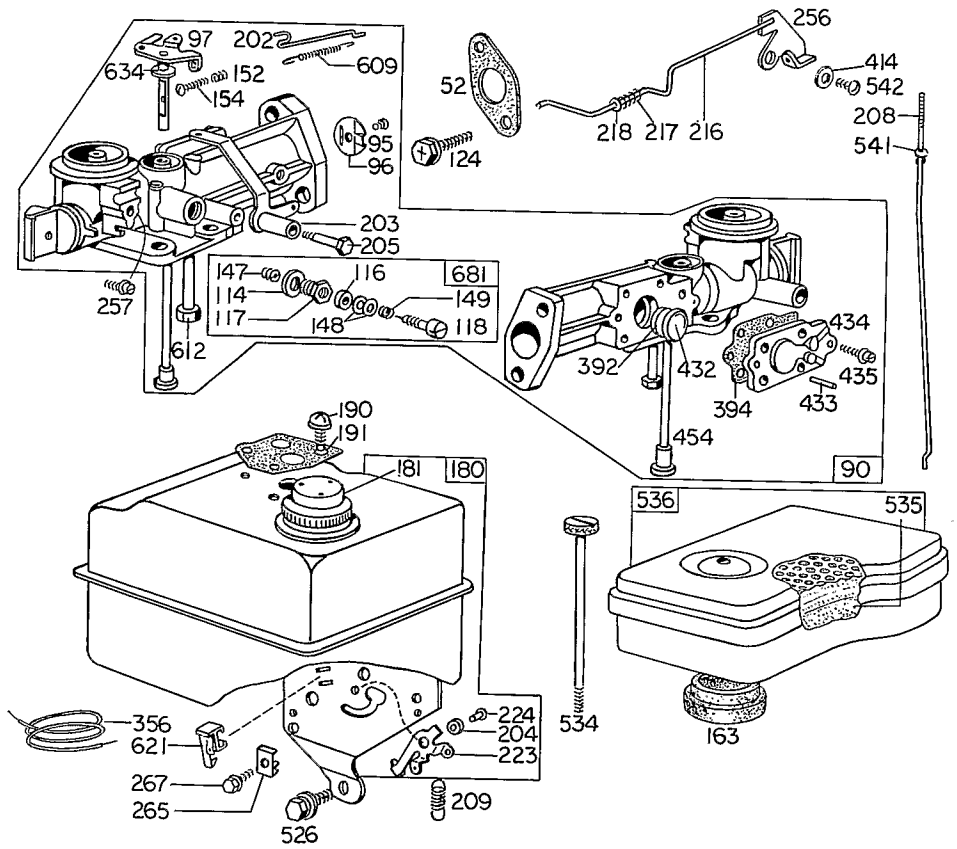

CARBURETOR ASSEMBLY

Ref. No.	Part No.	Description	No. Used
52	*27355	Gasket - Carburetor Mtg.	2
90	299576	Carburetor Assembly	1
95	93385	Screw - Throttle Valve to Shaft Sem	1
96	211203	Throttle - Carburetor	1
97	299212	Shaft and Lever - Throttle	1
114	66594	Gasket - Needle Valve Nut	1
116	65978	Packing - Needle Valve	1
117	230590	Nut - Needle Valve	1
118	23433	Valve - Needle	1
124	93357	Screw - Hex. Head	1
147	230591	Seat - Needle Valve	1
148	22235	Washer - Needle Valve	2
149	26336	Spring - Needle Valve	1
152	260575	Spring - Throttle Adjustment	1
154	92634	Screw - Machine, Round Head	1
163	*27660	Gasket - Air Cleaner Mtg.	1
180	297600	Tank Assembly - Fuel	1
181	298425	Cap - Fuel Tank	1
190	93341	Screw - Fuel Tank Mtg. Sem	1
191	*27911	Gasket - Fuel Tank Mtg.	1
202	260678	Link - Throttle	1
203	297718	Crank - Bell	1
204	230844	Bushing - Governor Lever (Flat)	1
205	93566	Screw - Shoulder	1
208	230737	Rod - Control	1
209	260695	Spring - Governor	1
216	299859	Link - Choke	1
217	260189	Spring - Choke Link	1

Ref. No.	Part No.	Description	No. Used
218	221198	Washer - Choke Link	1
223	221517	Lever - Governor Control	1
224	93491	Rivet - Governor Control Lever Mounting	1
256	299859	Crank - Bell	1
257	93263	Screw - Fil. Hd. Sem	1
265	221535	Clamp - Casing	1
267	93496	Screw - Sem	1
356	295413	Wire - Ground	1
392	260455	Spring-Fuel Pump Diaphragm	1
394	270026	Diaphragm	1
414	220982	Washer	1
432	221377	Cap - Spring	1
433	93265	Pin - Diaphragm Cover	1
434	210959	Cover - Diaphragm	1
435	93141	Screw - Diaphragm Cover	1
454	296178	Housing - Fuel Pipe Screen (for 3/16" O.D. Pipe)	1
526	93343	Screw - Tank Bracket Mounting Sem	1
534	93322	Screw - Air Cleaner	1
535	27987	Element - Air Cleaner	1
536	297036	Cleaner Assembly - Air	1
541	22398	Washer	1
542	92265	Screw	1
609	260694	Spring - Throttle Link	1
612	296811	Pipe - Fuel	1
621	297472	Switch - Stop	1
634	270167	Washer, Throttle Shaft (Felt)	1
681	299060	Needle Valve Kit	1

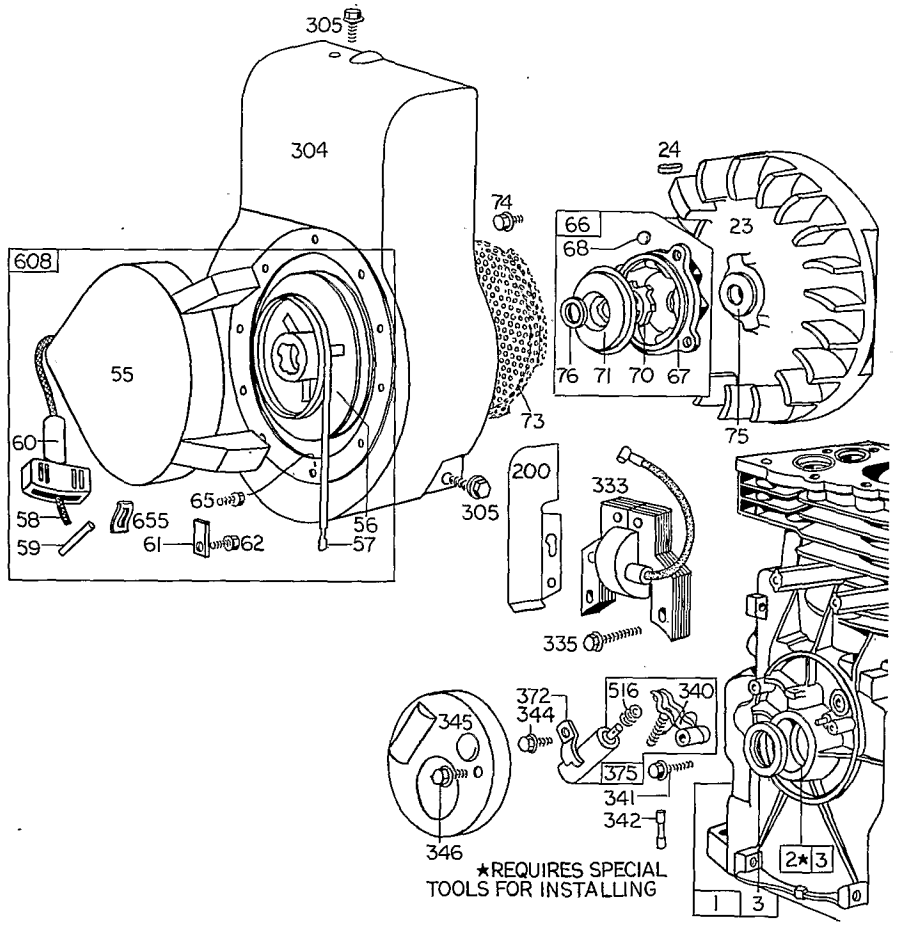

REWIND STARTER ASSEMBLY

Ref. No.	Part No.	Description	No. Used
1	299540	Cylinder Assembly	1
2	297565	Bushing - Cylinder	1
		Note: Requires special tools for installation	1
3	89660	Seal - Oil	1
23	297229	Flywheel - Magneto	1
24	61760	Key - Flywheel	1
55	299431	Housing - Rewind Starter	1
56	295871	Pulley - Rewind Starter	1
57	294303	Spring - Rewind Starter	1
58	66564	Rope - Rewind Starter	1
59	230228	Pin - Starter Grip	1
60	66728	Grip - Starter Rope	1
61	68848	Bumper - Starter Pulley	1
62	93254	Screw-Pulley Bumper Mounting	1
65	93067	Screw - Rewind Starter Housing Mounting	1
66	298310	Clutch Assy.-Rewind Starter	1
67	211383	Housing - Starter Clutch	1
68	63770	Ball - Clutch	1
70	298436	Ratchet - Rewind Starter	1
71	221653	Washer - Clutch Retainer	1
73	221923	Screen - Starter Pulley	1
74	93490	Screw - Sem	1
75	220865	Washer - Spring	1
76	68238	Washer - Ratchet Sealing	1

Ref. No.	Part No.	Description	No. Used
200	221480	Guide - Air	1
304	299410	Housing - Blower	1
305	93158	Screw - Blower Housing Mounting	1
333	298316	Armature - Magneto	1
335	93414	Screw-Armature Mtg. Sem	1
340	26018	Spring - Breaker Arm	1
341	93381	Screw - Breaker Arm Mounting Sem	1
342	65704	Plunger - Breaker Point	1
344	93042	Screw - Condenser Clamp Mounting Sem	1
345	220366	Cover - Breaker Point and Condenser	1
346	93014	Screw - Dust Cover Mounting	1
372	220477	Clamp - Condenser	1
375	294628	Breaker Points and Condenser Set	1
		Note: 299061 Ignition Kit Includes: 294628 Point Set 65704 Plunger 61760 Key - Flywheel	
516	260374	Spring - Connector	1
608	299334	Starter Assy. - Rewind	
655	221014	Anchor - Spring	1

PRODUCT CHANGES

In an effort to make improvements available to TORO owners as quickly as possible, minor changes are incorporated into Toro's products from time to time that do not become immediately shown in the Parts Catalog. If such a change apparently has been made in your unit, which is not reflected in your manual, see your TORO distributor or his Authorized TORO Service Dealer for information and part numbers.

IMPORTANT ORDERING INSTRUCTIONS

Repair parts are available from your Authorized TORO Service Dealer. To insure getting correct parts without delay, furnish the following information:

1. Serial number of your tiller as shown on the name plate.
2. Part number, description, and quantity of each part required.
3. State whether parts should be shipped by mail or express. All repair parts are shipped F.O.B. Factory.
4. Name and address where parts are to be shipped.
5. Do not order by reference number; use part number only.

THE TORO PROMISE

It is Toro's policy to design and produce TORO products to provide our customers with a high level of performance and durability in normal operation. Our products, however, are produced in high volume, and it is inevitable that occasionally a unit will reach a customer with a defect in materials or workmanship which causes that unit to fall below the normal high level of TORO performance. Invariably, such a defect will be noticed in a residential product within one year, and in an institutional product within ninety days after purchase. Recognizing this possibility, Toro has established a simple guarantee policy and procedure that is intended to assure customer satisfaction. This guarantee statement is as follows:

The Toro Promise

The Toro Company promises to repair any TORO product for the original purchaser if defective in materials or workmanship. The following time periods from the date of purchase apply:

Residential products	1 year
Residential products used commercially	45 days
Institutional products	90 days

The costs of parts and labor are included, but the customer pays the transportation costs. Just return any residential product to an Authorized TORO Service Dealer, or any institutional product to a TORO distributor.

Should you feel that a product is defective, and wish to rely on The Toro Promise, the following procedure is recommended:

1. Contact any TORO dealer or distributor, but preferably the dealer or distributor from whom you purchased the product.
2. He will instruct you to either return the product to him, or tell you the name and address of your nearest Authorized TORO Service Dealer if the product is to be returned to such dealer.
3. Take the product and your original sales slip, or other evidence of purchase date, to the servicing dealer.
4. The servicing dealer will inspect the unit, advise you whether the product is defective and, if so, make all repairs necessary to correct the defect without extra charge to you.

If for any reason you are dissatisfied with the dealer's analysis of the defect or the service he performs, we urge you to contact us. Write:

TORO "Customer Care" Department
8111 Lyndale Avenue South
Bloomington, Minnesota 55420

MAINTENANCE RECORD

MAINTENANCE RECORD

Litho in U.S.A.