Form No. 3325–939

Reel Drive Hose Kit

Reelmaster® 5200/5400

Part No. 104–9317

Installation Instructions

Warning

Hydraulic fluid escaping under pressure can penetrate skin and cause injury.

- **Safely relieve all pressure in the hydraulic system before performing any work on the hydraulic system.**
- **Make sure all hydraulic fluid hoses and lines are in good condition and all hydraulic connections and fittings are tight before applying pressure to the hydraulic system.**
- **Keep your body and hands away from pin hole leaks or nozzles that eject high pressure hydraulic fluid.**
- **Use cardboard or paper to find hydraulic leaks.**
- **Get immediate medical help if fluid is injected into skin.**

1. Locate and remove hoses to be replaced. Refer to figure 3.

Note: When removing old hoses, remember how they were routed through components in machine.

2. Insert each set of new hoses (3) into a protective sleeve. Part number of each new hose is shown in figure.

Note: Shorter protective sleeve is used on hoses for front center cutting unit.

Front Cutting Units

3. Using dimensions shown in figure 1, position and secure each end of protective sleeve to front hoses with a cable tie.

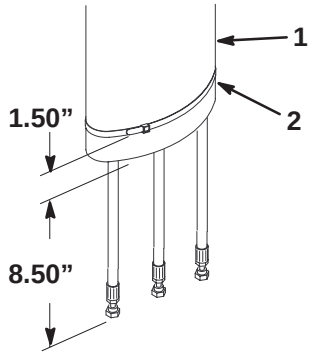

Figure 1

1. Protective cover
2. Cable tie

Rear Cutting Units

4. Using dimensions shown in figure 2, position and secure each end of protective sleeve to rear hoses with a cable tie.

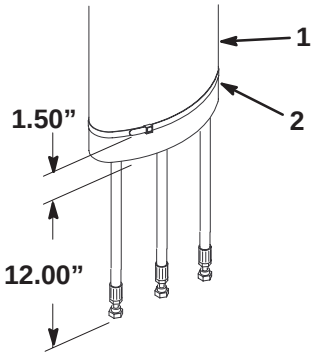

Figure 2

1. Protective cover
2. Cable tie

5. Route each set of hoses and protective sleeve through appropriate hose guide and secure to reel motor and traction unit.

© 2001 by The Toro Company
8111 Lyndale Avenue South
Bloomington, MN 55420-1196

All Rights Reserved
Printed in the USA

Note: Hose guide and mounting fasteners are listed in parts catalog for reference only. They are not included in kit.

Note: Lubricate the new O–rings with a light coating of oil. Make sure the O–rings are properly positioned in fittings and hoses are not twisted or kinked when making connections.

Note: Refer to TORO Hose Servicing Manual, Form No. 94–813SL for proper routing practices and installation techniques.

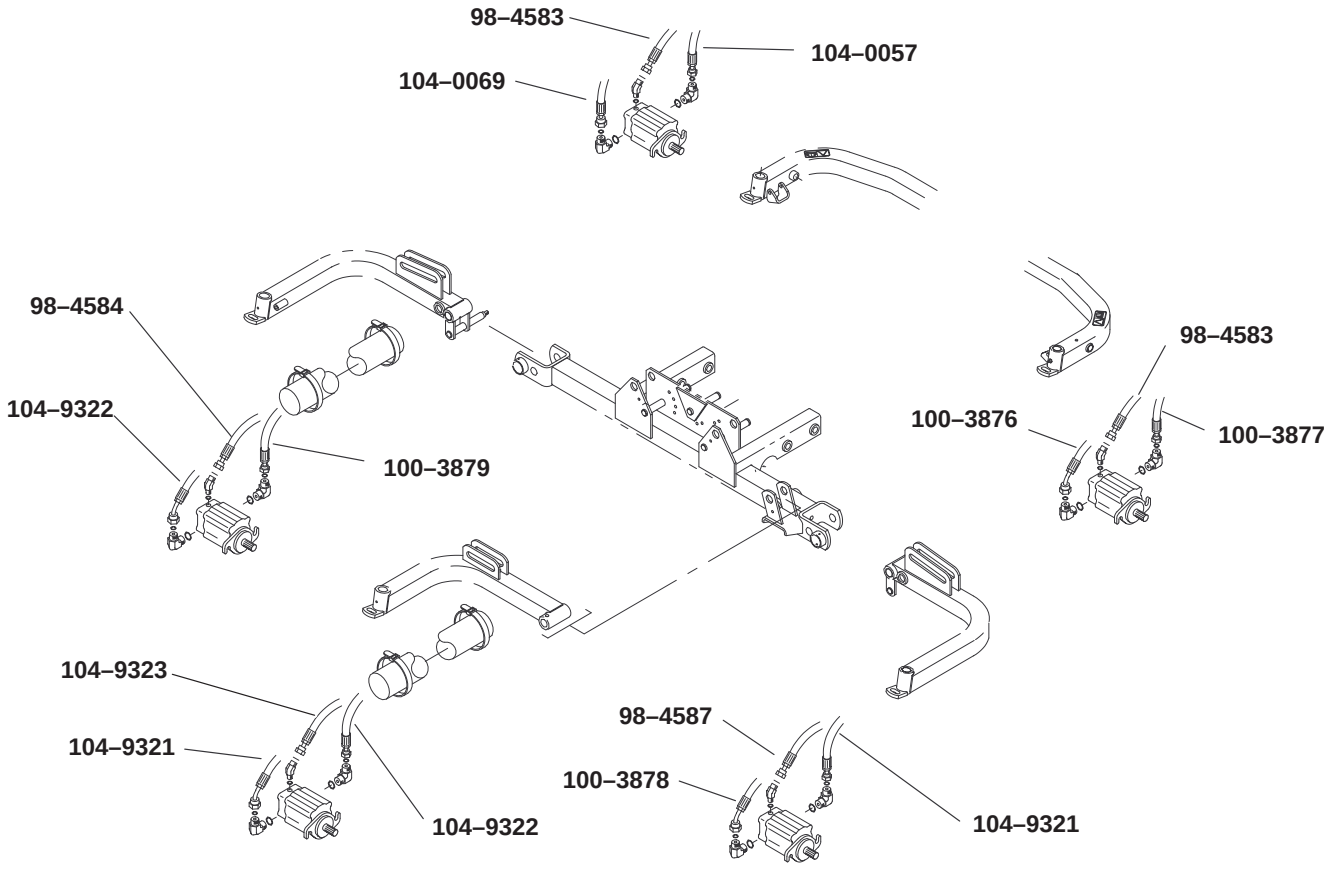

Figure 3