1973
FORM NO. 3310-664

TORO®

MODEL NO. 20660 - 500001 & UP

PARTS CATALOG

21" S.P. GRASSMASTER† KEY-LECTRIC®

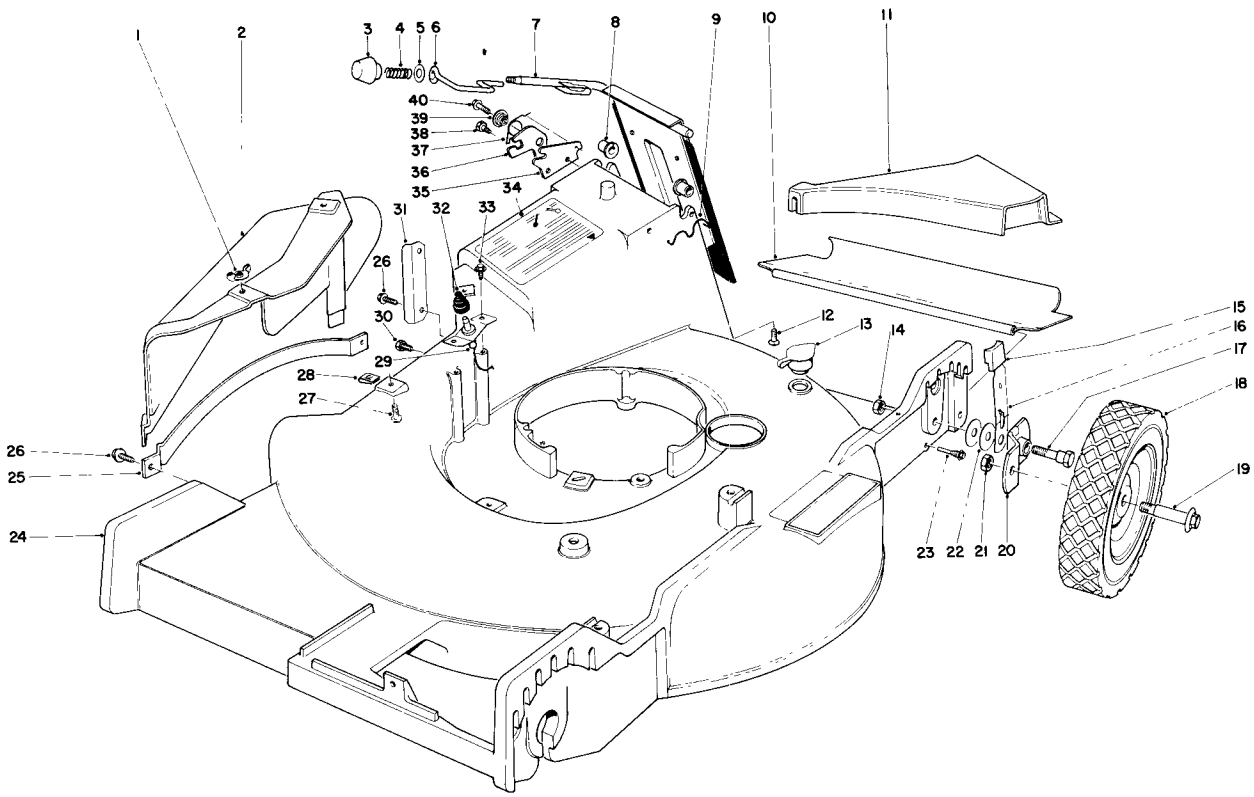

HOUSING ASSEMBLY

Ref. No.	Part No.	Description	No. Used
1	32103-14	Wing Nut	2
2	23-0180	Deflector	1
3	233-37	Knob	1
4	23-0920	Spring - Compression	1
5	23-1120	Washer	1
6	23-0940	Latch Door	1
7	23-0990	Door Handle	1
8	23-0880	Bushing	2
9	23-0200	Door Retaining	1
10	23-0560	Rear Safety Shield	1
11	23-0360	Insert Rear	1
12	32144-17	Screw Flat Hd.	2
13	6-4500	Washout Plug	1
14	32146-5	Locknut	2

Ref. No.	Part No.	Description	No. Used
15	8-4220	Knob - Arm	2
16	23-0400	Spring Arm	2
17	25-3440	Pivot Screw	2
18	12-2620	Wheel and Tire Assembly	2
19	3-2652	Wheel Bolt	2
20	24-7710	Pivot Arm	1
*	23-9120	Pivot Arm	1
21	32146-12	Locknut	2
22	5-4460	Pivot Washer	4
23	8-6160	Pivot Screw	2
24	6-2809	Housing	1
25	23-0210	Bar Safety	1
26	12-3270	Screw Special	3
27	3290-133	Screw Round Head	2

*Not Illustrated

Copyright 1974 by
The Toro Company
Bloomington, Minnesota 55420 U.S.A.

Price $1.00

†Exclusive Trade Name of The Toro Company.

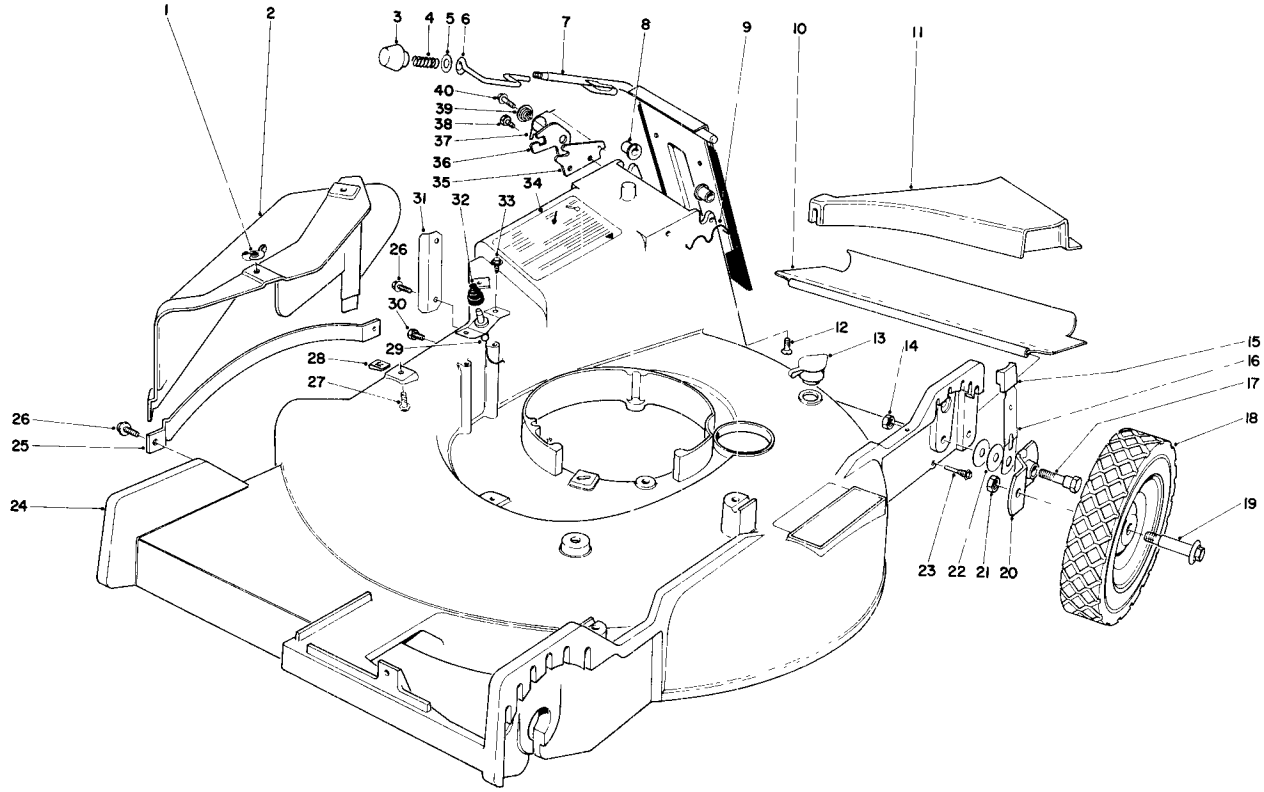

HOUSING ASSEMBLY (Continued)

Ref. No.	Part No.	Description	No. Used
28	3290-380	Special Nut	2
29	25-1010	Deflector Switch (Incl.Ref.#32)	1
30	32104-114	Screw Self Tapping	1
31	23-0140	Clip Retaining	1
32	12-4930	Boot Switch	1
33	32144-12	Screw	2
34	23-1280	Decal - Caution	1

Ref. No.	Part No.	Description	No. Used
35	23-1040	Plate - Latch	1
36	23-1190	Latch Safety	1
37	23-1200	Spring - Torsion	1
38	32104-17	Screw Hex Hd.	1
39	23-1180	Spacer Latch	1
40	11-9760	Screw Thread Forming	1

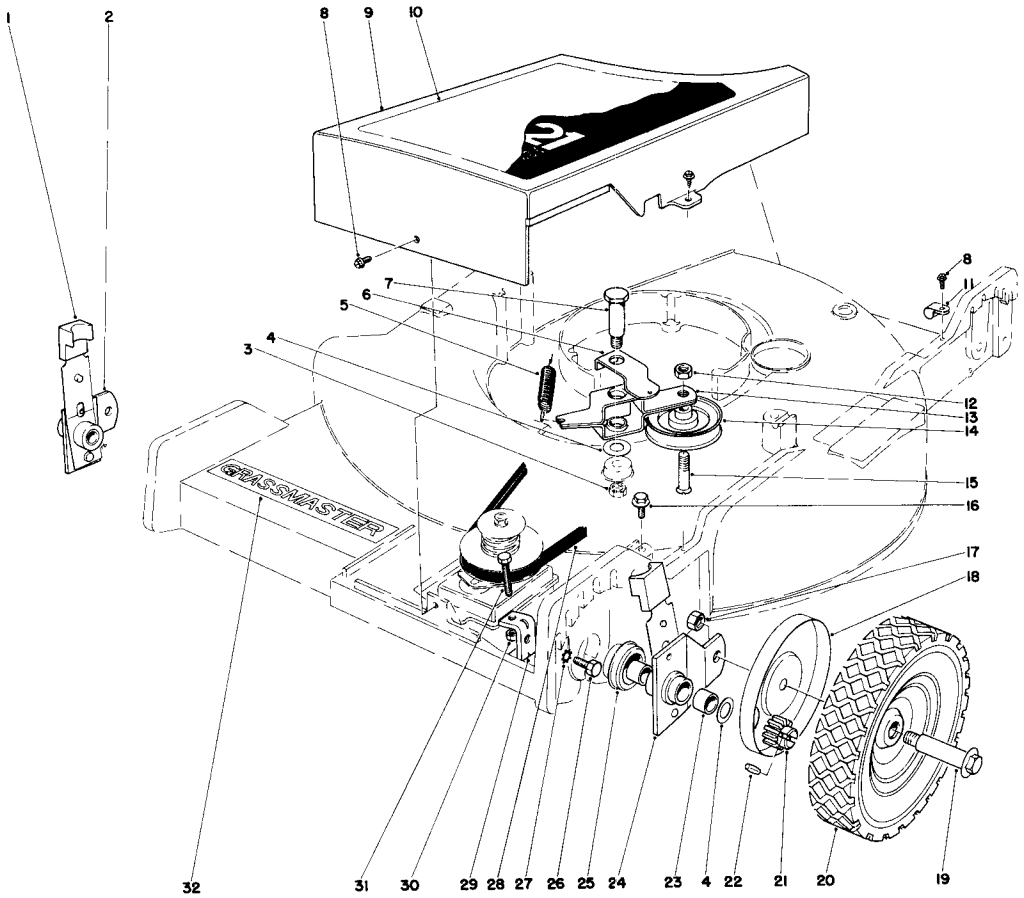

FRONT WHEEL AND PIVOT ARM ASSEMBLY

Ref. No.	Part No.	Description	No. Used
1	8-4220	Knob Arm	2
2	24-6040	Pivot Arm (Incl. Ref. # 23)	1
3	32146-2	Locknut	1
4	18-9810	Washer Thrust	3
5	23-0530	Spring – Tension	1
6	23-0100	Lever – Idler Bracket	1
7	23-0310	Shoulder Bolt	1
8	12-5450	Screw Special	4
9	23-0510	Cover Belt	1
10	23-0840	Decal Belt Cover	1
11	2412-52	Cable Clamp	1
12	3219-3	Hex Nut	1
13	23-0440	Idler Bracket	1
14	23-0570	Idler Pulley	1
15	23-0850	Screw – Low Head	1
16	32144-11	Screw Hex Hd.	2

Ref. No.	Part No.	Description	No. Used
17	32146-12	Locknut	2
18	23-0280	Cover Wheel	2
19	3-2652	Wheel Bolt	2
20	12-2610	Wheel & Tire Assembly	2
21	18-9690	Pinion Gear	2
22	3284-3	Coil Pin	2
23	256-206	Bushing	4
24	24-6050	Pivot Arm (Incl. Ref. # 23)	1
25	23-0380	End Cap	2
26	322-5	Capscrew	1
27	3255-8	Lockwasher	1
28	23-0220	V-Belt	1
29	23-0540	Bracket – Gear Box	1
30	32146-17	Jam Lock Nut	1
31	23-0640	Screw	1
32	23-0930	Decal Grassmaster	1

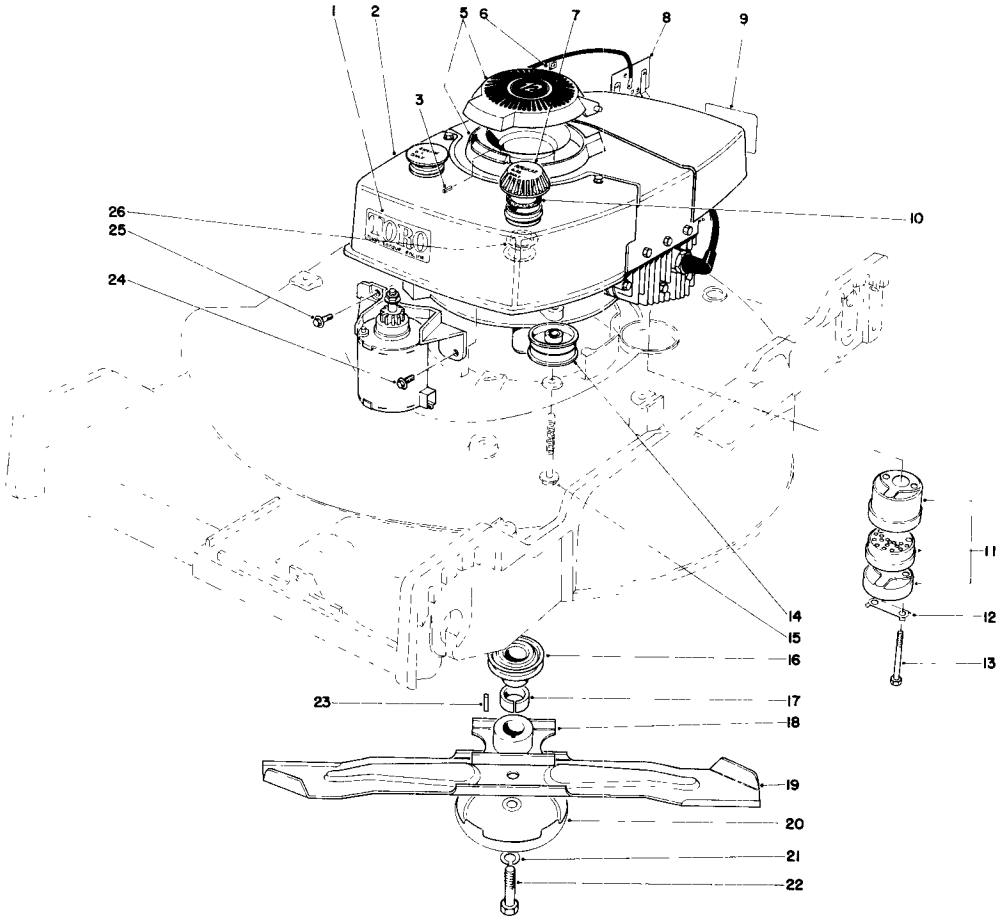

ENGINE ASSEMBLY

Ref. No.	Part No.	Description	No. Used
1	23-1260	Decal – High Torque	1
2	221-485	Engine (TNT 120-12004)	1
*	221-464	Engine (TNT 120-12001)	1
3	32121-90	Spring Pin	1
5	25-2110	Cover Assembly	1
6	25-1570	Clip Wire	2
7	20-2860	Gas Cap Assembly (Incl. Ref. # 10 & 26)	1
8	24-9770	Switch and Junction Box	1
9	20-2710	Decal Maintenance	1
10	2210-144	Gasket	2
11	5-4769	Muffler Assembly (Incl. Ref. # 12 & 13)	1
12	3-5094	Locking Clip	1
13	321-20	Screw Hex Hd.	2
14	24-6510	Idler Screw	1

Ref. No.	Part No.	Description	No. Used
15	11-0580	Screw	3
16	24-6580	Driver Pulley (TNT 120-12004)	1
*	23-0130	Driver Pulley (TNT 120-12001)	1
17	24-8880	Spacer Pulley (TNT 120-12004)	1
*	23-0120	Spacer Pulley (TNT 120-12001)	1
18	24-6560	Blade Retainer (TNT 120-12004)	1
*	23-0110	Blade Retainer (TNT 120-12001)	1
19	23-0070	Blade	1
20	8-4240	Anti Scalp Cup	1
21	3253-22	Lockwasher	1
22	23-0080	Screw Blade	1
23	21-5070	Square Key (TNT 120-12004)	1
*	21-5060	Square Key (TNT 120-12001)	1
24	12-3270	Screw Special	1
25	11-9760	Screw Special	1
26	2210-143	Baffle	1

*Not Illustrated

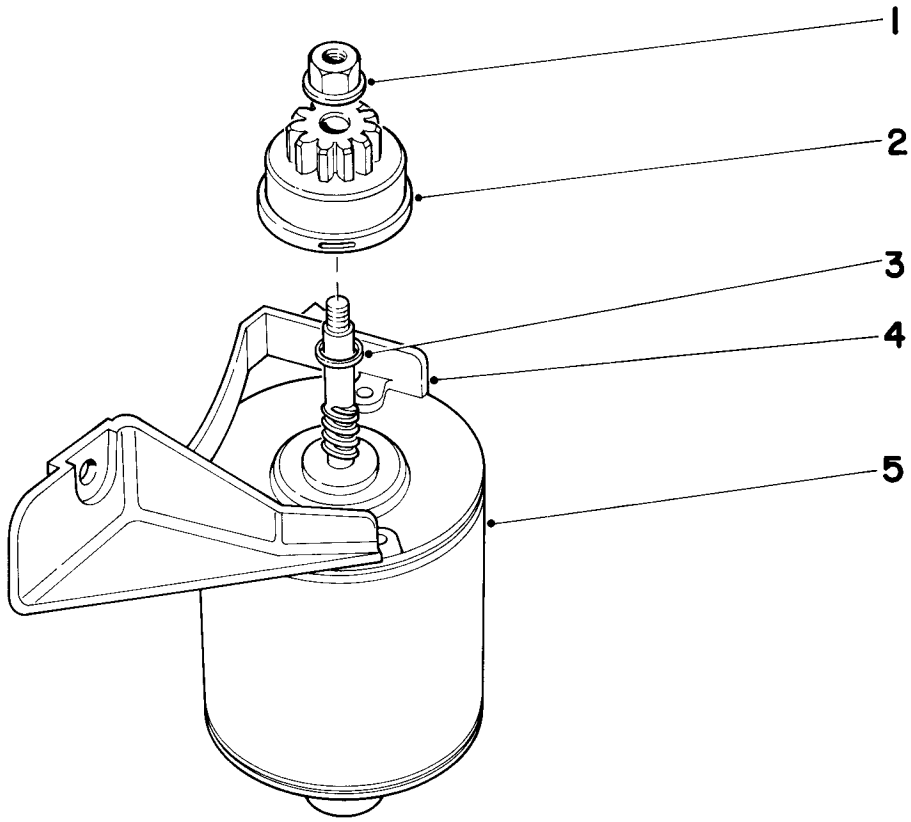

STARTER MOTOR

Ref. No.	Part No.	Description	No. Used
1	32128-16	Flange Nut	1
2	22-9770	Pinion Assembly	1
3	23-9590	Spacer	1
		5.9M use 25.3960	

Ref. No.	Part No.	Description	No. Used
4	218-472	Mounting Bracket	1
5	23-0910	Starter Motor (Incl. Ref. # 1 - 4)	1

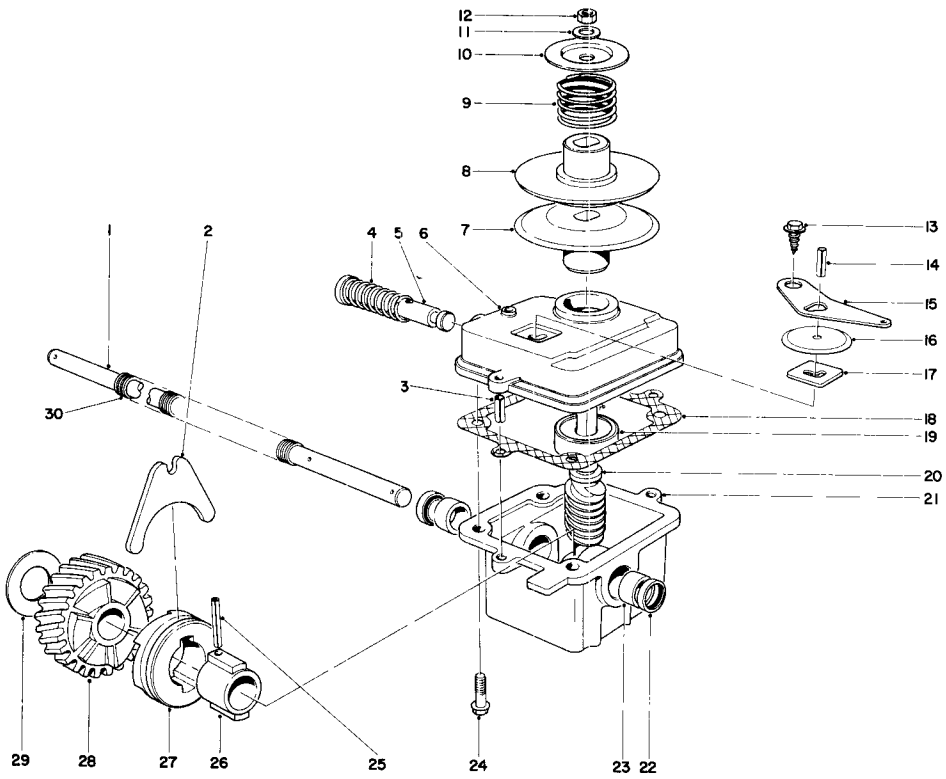

GEAR CASE ASSEMBLY

Ref. No.	Part No.	Description	No. Used
1	24-7740	Drive Shaft	1
2	5-3247	Shifter Fork	1
3	32121-1	Roll Pin	2
4	3-0731	Spring	1
5	5-3248	Shifter Rod	1
6	5-3283	Cover	1
7	23-0290	Pulley Half Lower	1
8	23-0300	Pulley Half Upper	1
9	23-0230	Spring Compression	1
10	23-0270	Spring Retainer	1
11	3256-16	Washer	1
12	32153-4	Locknut	1
13	32140-64	Self Tapping Screw	1
14	32121-23	Roll Pin	1
15	5-3252	Shifter Arm	1
16	3-2615	Transmission Dust Cover	1

Ref. No.	Part No.	Description	No. Used
17	3-0681	Latch Plate	1
18	3-0734	Gasket-Gear Case	1
19	251-144	Ball Bearing	1
20	23-0520	Shaft-Worm	1
21	5-4459	Gear Case (Incl. Ref. #22 & 23)	1
22	253-86	Oil Seal	2
23	256-110	Bushing	2
24	11-9760	Screw	4
25	32121-88	Coil Pin	1
26	3-0721	Sleeve	1
27	19-5660	Clutch Jaw	1
28	18-9740	Helical Gear	1
29	3-0724	Thrust Washer	1
30	24-8690	Cover – Drive Shaft	1
*	24-7730	Gear Case Assembly Complete	1

*Not Illustrated

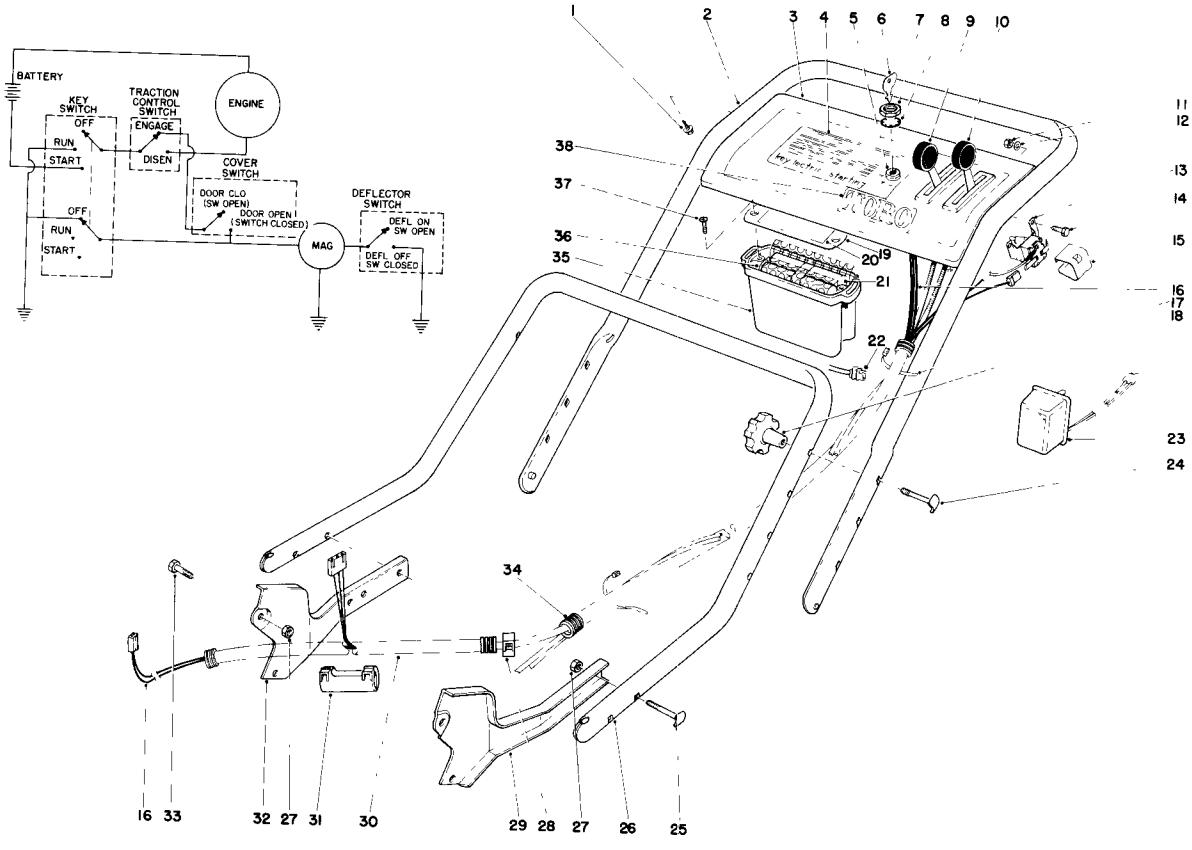

HANDLE ASSEMBLY

Ref. No.	Part No.	Description	No. Used
1	32104-76	Screw	4
2	23-0580	Upper Handle	1
3	23-0590	Control Plate	1
4	25-1820	Decal – Control Plate	1
5	23-0660	Starter Switch	1
6	218-412	Key (Set of 2)	1
7	218-461	Hex Nut	1
8	3254-5	Lockwasher	1
9	20-9780	Speed Control	1
10	25-1170	Traction Control	1
11	3296-9	Hex Nut	2
12	3256-21	Washer	2
13	24-9760	Switch – Safety	1
14	3290-124	Screw Hex. Hd.	2
15	25-1590	Cover Switch	1
16	25-0100	Wiring Harness	1
17	3290-378	Cable Tie	4
18	19-4050	Knob Handle Release	2
19	6-8230	Cover Battery Pack	1
20	25-4020	Decal – Battery	1

Ref. No.	Part No.	Description	No. Used
21	24-7750	12 Cell Battery Pack	1
22	11-3790	Plug & Wire Assembly	1
23	6-9780	Battery Charger	1
24	6-6330	Handle Screw	2
25	23-9140	Handle Screw	4
26	25-2230	Lower Handle	1
27	32146-5	Nut	8
28	2412-48	Ring Fitting	5
29	25-2220	Latch Handle L.H.	1
30	25-1180	Lower Wiring Harness Cover	1
31	2412-49	Breakout Fitting	1
32	25-2210	Latch Handle R.H.	1
33	322-4	Capscrew	4
34	25-1190	Upper Wiring Harness Cover	1
35	6-9750	Container – Battery Pack	1
36	6-8320	Spacer Battery	1
37	32104-93	Screw Self Tapping	2
38	20-4690	Decal Toro	1
*	24-8750	Loose Parts Bag	1
*	5-3556	Starter Rope	1

*Not Illustrated

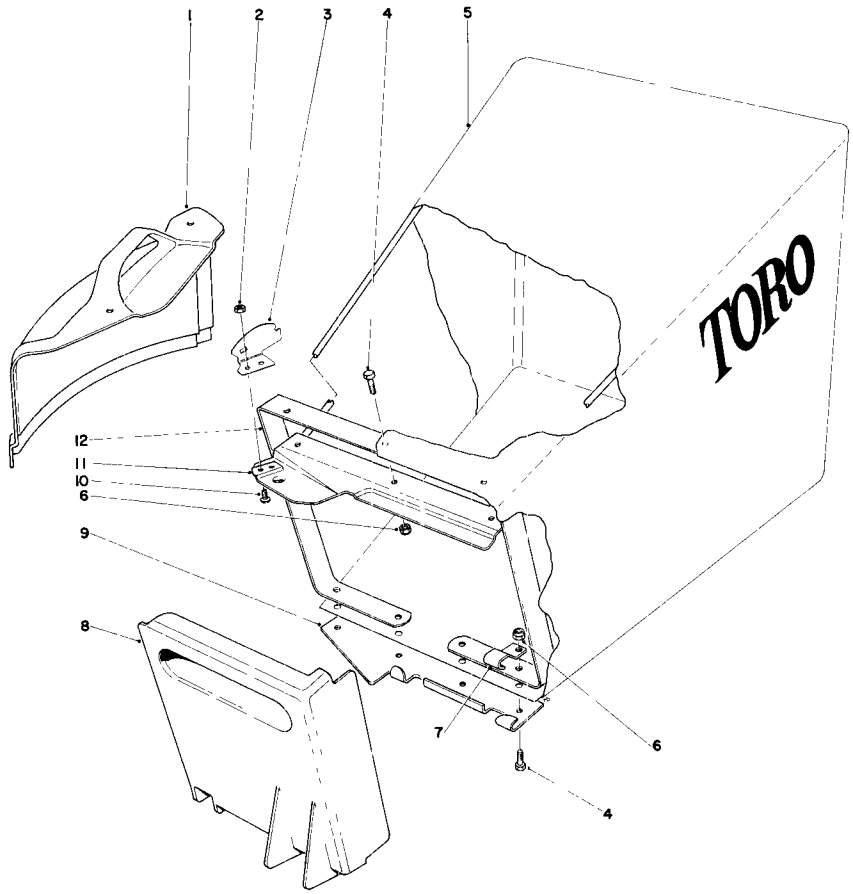

GRASS BAG ASSEMBLY

Ref. No.	Part No.	Description	No. Used
1	23-0170	Cover	1
2	32146-17	Locknut	2
3	23-1060	Latch - Bag	1
4	3290-321	Hex Hd. Machine Screw	7
5	6-1389	Grass Bag	1
6	32153-1	Locknut	7

Ref. No.	Part No.	Description	No. Used
7	23-5100	Bracket Support	1
8	23-1140	Door - Bag	1
9	23-1150	Bracket Door	1
10	25-3120	Screw	2
11	25-3230	Bag Frame	1
12	23-1110	Bag Support	1

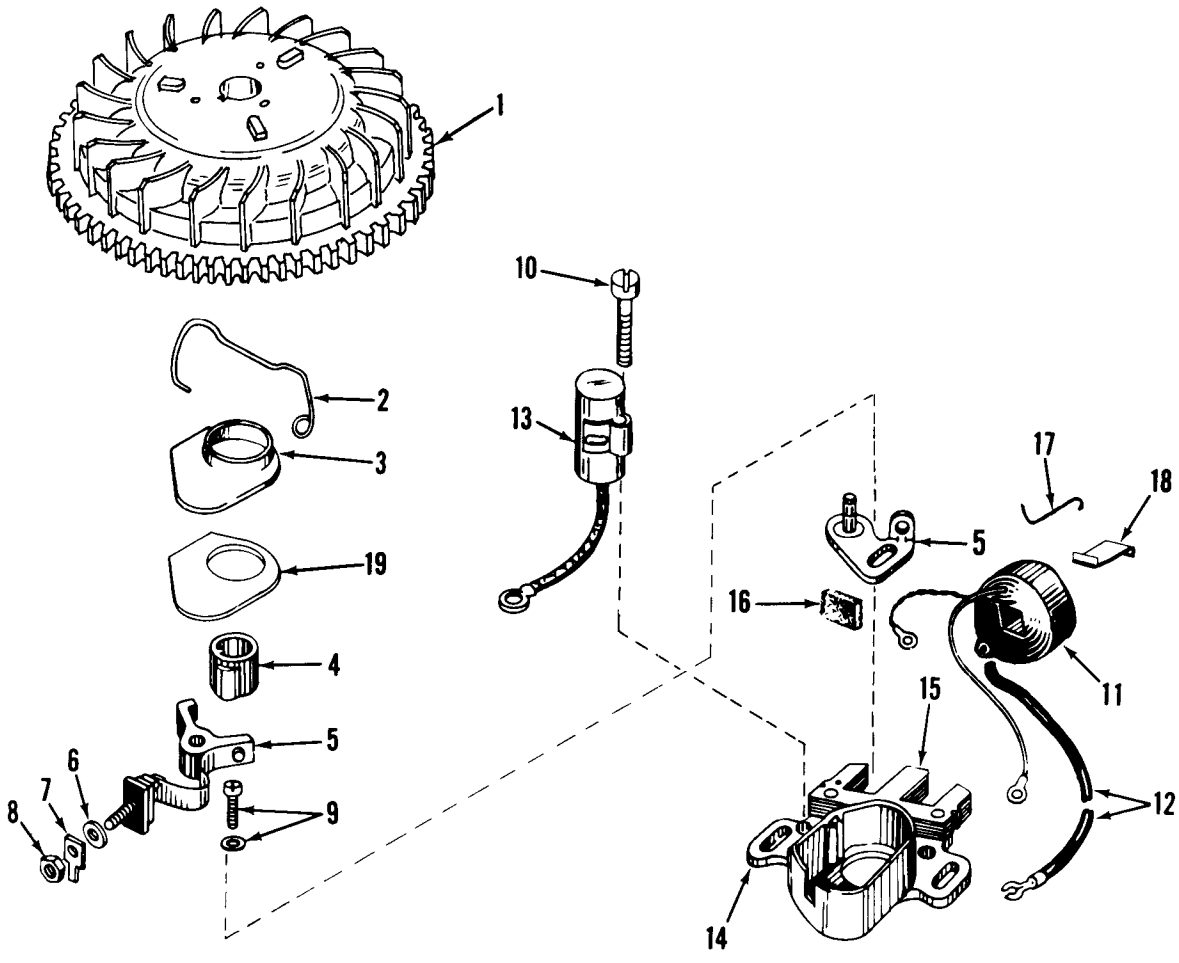

*MAGNETO NO. 610900

Ref. No.	Part No.	Description	No. Used
1	610899	Flywheel	1
2	30551	Spring, Breaker Box	1
3	30550	Cover, Breaker Box Dust	1
4	30992	Cam, Breaker	1
5	30547A	Contact Assembly, Breaker	1
6	610385	Washer, Terminal	1
7	33356	Tab, Ground Terminal	1
8	610408	Nut, Terminal	1
9	29181	Screw & Washer, Breaker	1
10	610593	Screw, Condenser Fastening	1

Ref. No.	Part No.	Description	No. Used
11	30560A	Coil Assy. (Incl. No. 12)	1
12	30554	Wire, Lead	1
13	30548A	Condenser	1
14	30545	Core & Plate	1
15	30561A	Stator Assy. (Incl. Nos. 2, 3, 5 thru 14 & 16 thru 19)	1
16	30549	Felt, Cam Wiper	1
17	31311	Clip, Coil Locking	1
18	29629	Spring, Coil Wedge	1
19	32052	Gasket, Dust Cover	1

*The complete magneto is not available as an assembly. The magneto number is shown for reference purposes only. Order component parts individually, as shown in parts list.

ENGINE TECUMSEH MODEL NO. TNT 120-12001

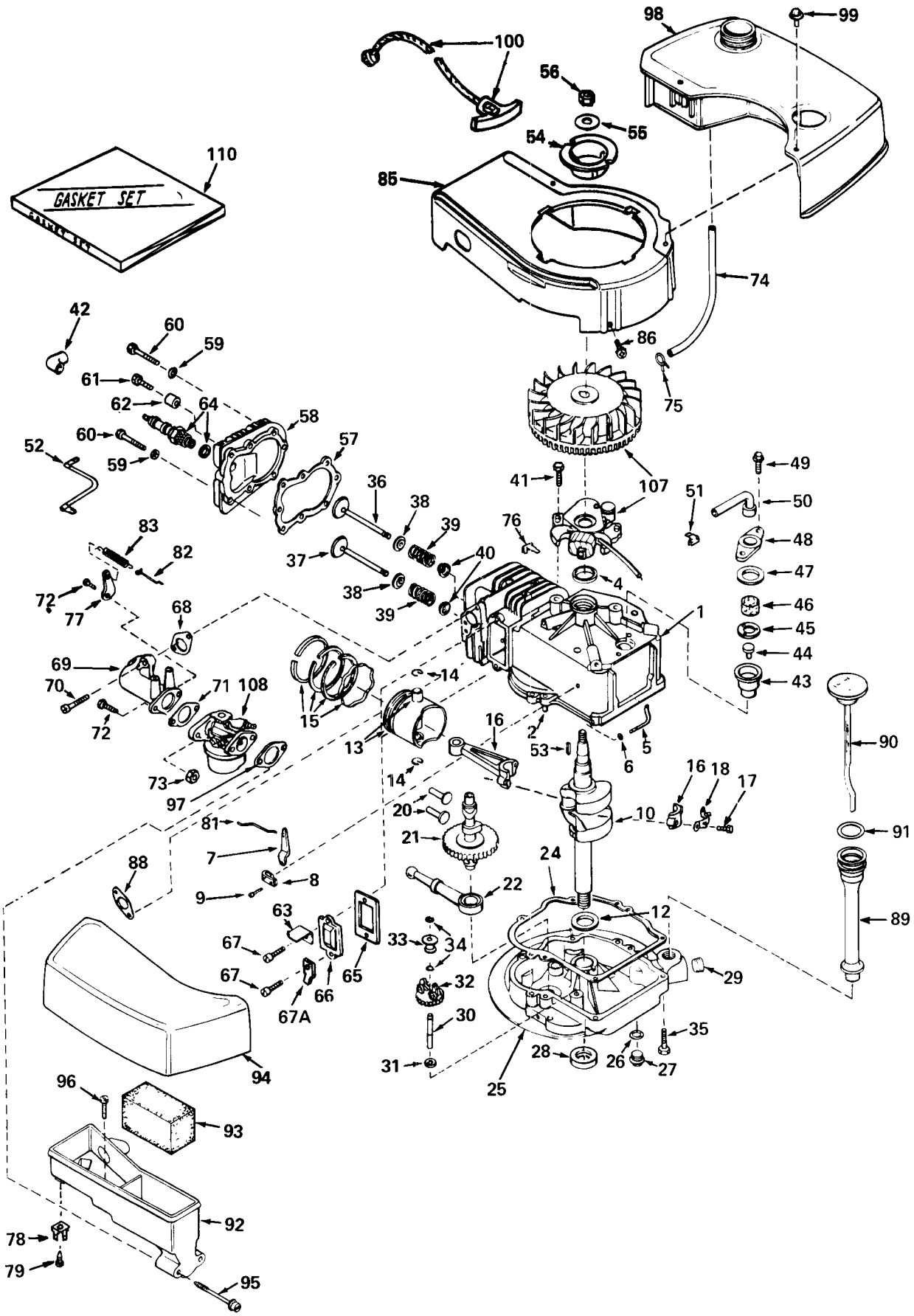

ENGINE TECUMSEH MODEL NO. TNT 120-12001

Ref. No.	Part No.	Description	No. Used
1	33899	Cylinder Assembly (Incl. Ref. # 2, 4 & 87)	1
2	26727	Pin, Dowel	2
4	32600	Seal, Oil	1
5	30589	Rod, Governor (Incl. # 6)	1
6	28277	Washer, Flat	1
7	32651	Lever, Governor	1
8	31335	Clamp, Governor Lever	1
9	650548	Screw, Hex Slotted Washer Hd.	1
10	33900	Crankshaft	1
12	32323	Washer, Thrust	1
13	33562	Piston & Pin Assembly (Incl. 2 of # 14) (Standard)	1
13	33563	Piston & Pin Assembly (Incl. 2 of # 14) (.010 Oversize)	1
13	33564	Piston & Pin Assembly (Incl. 2 of # 14) (.020 Oversize)	1
14	20381	Ring, Piston Pin Retaining	2
15	33567	Ring Set, Piston (Standard)	1
15	33568	Ring Set, Piston (.010 Oversize)	1
15	33569	Ring Set, Piston (.020 Oversize)	1
16	32875	Rod Assembly, Connecting (Incl. # 17 & 18)	1
17	32610	Bolt, Connecting Rod	2
18	32609	Plate, Lock	1
20	27241	Lifter, Valve	2
21	33553	Camshaft (Mech. Compression Release)	1
22	29914	Pump Assembly, Oil	1
24	*26750A	Gasket, Mounting Flange	1
25	33901	Flange Assembly, Mounting (Incl. # 27, 28, 29 & 30)	1
26	*28833	Gasket, Oil Drain Plug	1
27	27244	Plug, Oil Drain	1
28	27897	Seal, Oil	1
29	33885	Plug, Oil Drain	1
30	30574	Shaft, Mech. Governor	1
31	30590A	Washer, Flat	1
32	33902	Gear Assembly, Governor	1
33	33903	Spool, Governor	1
34	29193	Ring, Retaining	2
35	650488	Screw, Hex. Hd. Sems	6
36	29314A	Valve, Intake (Standard) (Incl. # 38, 39 & 40)	1
36	29315B	Valve, Intake (1/32" Oversize) (Incl. # 38, 39 & 40)	1
37	29313B	Valve, Exhaust (Standard) (Incl. # 38, 39 & 40)	1
37	29315B	Valve, Exhaust (1/32" Oversize) (Incl. # 38, 39 & 40)	1
38	31671	Cap, Upper Valve Spring	2
39	31672	Spring, Valve	2
40	31673	Cap, Lower Valve Spring	2
41	650489	Screw, Hex. Hd. Sems w/flatwasher	2
42	610118	Cover, Spark Plug	1
43	33731	Body, Breather Tube	1
44	33732	Valve, Check	1
45	33733	Baffle, Breather	1
46	33734	Element, Breather	1

Ref. No	Part No.	Description	No. Used
47	*33735	Gasket, Breather	1
48	33737	Cover, Breather	1
49	650768	Screw, Hex.Hd. w/Conical Washer	2
50	33886	Tube, Breather	1
51	33887	Clip, Breather Tube	1
52	33888	Wire, Ground	1
53	27247	Key, Flywheel	1
54	32723	Pulley, Starter	1
55	650490	Washer, Belleville	1
56	650607	Nut, Flywheel	1
57	*33554	Gasket, Cylinder Head	1
58	33016	Head, Cylinder	1
59	26073	Washer	8
60	6021	Screw, Hex. Hd. Cap	5
61	650697	Screw, Hex. Hd. Cap	3
62	33892	Spacer	3
63	30593	Clip, Magneto Wire	1
64	33636	Plug, Spark (Champion J-8 or equivalent)	1
65	*27234	Gasket, Valve Spring Cover	1
66	32755	Cover, Valve Spring Box	1
67	650128	Screw, Fil. Slotted Hd. Sems	2
67A	33932	Terminal	1
68	*30188	Gasket, Intake Pipe	1
69	33004	Pipe, Intake	1
70	650451	Screw, Fil. Flex Hd. Self-Locking	2
71	*31688	Gasket, Carburetor	1
72	6202	Screw, Hex Hd. Cap, Sems	2
73	29752	Nut & Lockwasher	2
74	32342	Line, Fuel	1
75	26460	Clamp, Fuel Line	2
76	29443	Clip, Fuel Line	1
77	33086	Lever, R.P.M. Adjusting	1
78	33933	Terminal	1
79	29666	Screw, Phil. Fil. Hd. Self-Tap.	1
81	33133	Link, Governor	1
82	33295	Link, Governor Spring	1
83	31361	Spring, Governor	1
85	33907	Housing, Blower	1
86	650497	Screw, Flex Pan Hd.	2
88	*30081	Gasket, Exhaust	1
89	33893	Tube, Oil Filler	1
90	33894	Dipstick, Oil (Incl. # 91)	1
91	33590	"O" Ring	1
92	33895	Body, Air Cleaner	1
93	33896	Filter, Air	1
94	33897	Cover, Air Cleaner	1
95	650762	Screw, Fil. Hd. Mach. Sems.	2
96	650784	Screw, Hex. Hd. w/Flatwasher Thr'd Forming.	1
97	*33051	Gasket, Air Cleaner	1
98	33904	Tank, Fuel	1
99	28763	Screw, Hex Washer Hd. Thr'd Forming.	2
100	590343	Rope Assy., Starter	1
107	610900	Magneto	1
108	631831	Carburetor	1
110	33906	Gasket Set (Incl. Items Marked*)	1

ENGINE TECUMSEH MODEL NO. TNT 120-12004

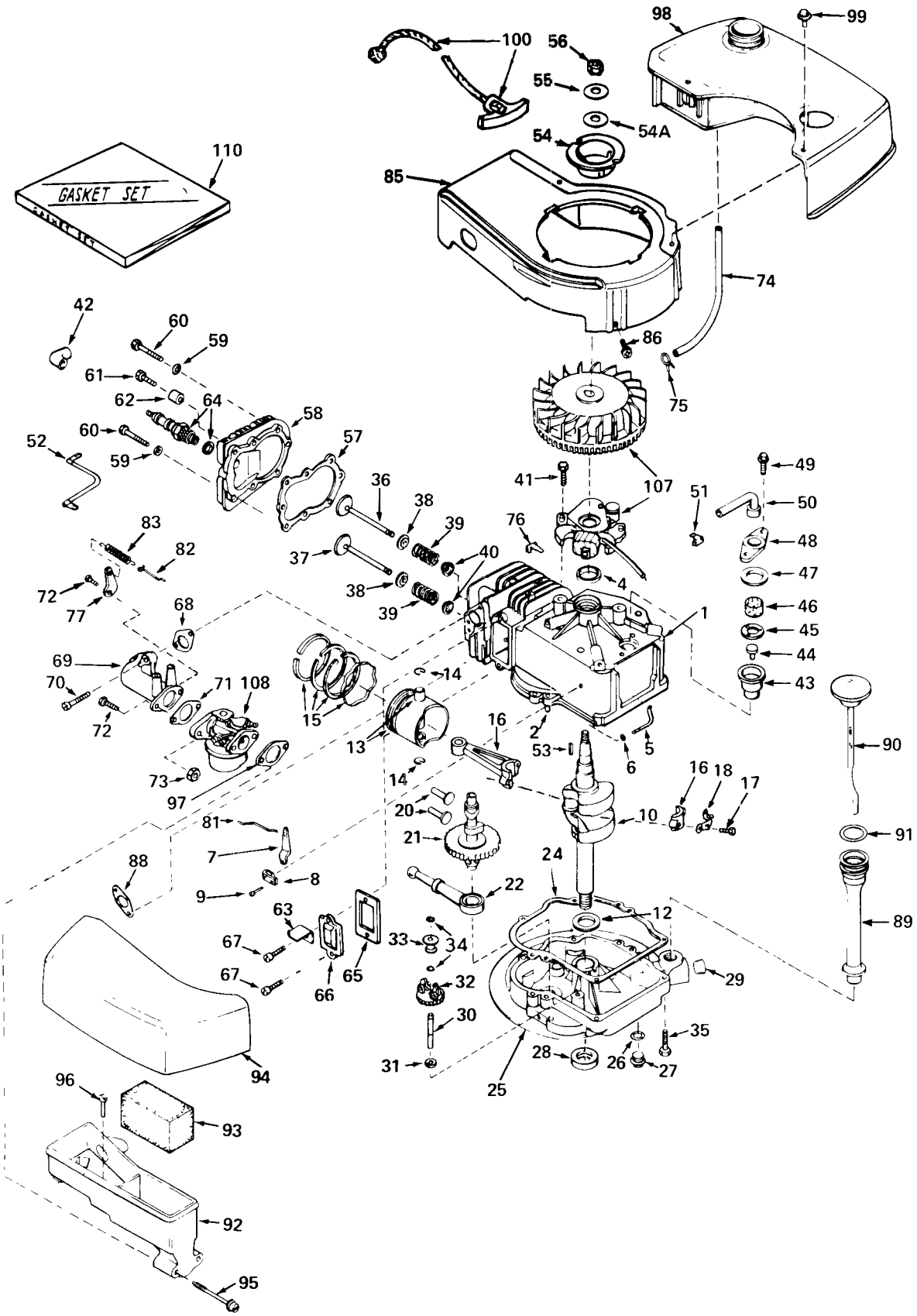

ENGINE TECUMSEH MODEL NO. TNT 120-12004

Ref. No.	Part No.	Description	No. Used
1	33899	Cylinder Assembly (Incl. Nos. 2, 4 & 87)	1
2	26727	Pin, Dowel	2
4	32600	Seal, Oil	1
5	30589	Rod, Governor (Incl. No. 6)	1
6	28277	Washer, Flat	1
7	32651	Lever, Governor	1
8	31335	Clamp, Governor Lever	1
9	650548	Screw, Hex Slotted Washer Hd.	1
10	34085	Crankshaft	1
12	32323	Washer, Thrust	1
13	33562	Piston & Pin Assembly (Incl. 2 of No. 14) (Std.)	1
13	33563	Piston & Pin Assembly (Incl. 2 of No. 14) (.010 Oversize)	1
13	33564	Piston & Pin Assembly (Incl. 2 of No. 14) (.020 Oversize)	1
14	20381	Ring, Piston Pin Retaining	2
15	33567	Ring Set, Piston (Std.)	1
15	33568	Ring Set, Piston (.010 Oversize)	1
15	33569	Ring Set, Piston (.020 Oversize)	1
16	32875	Rod Assembly Connecting (Incl. Nos. 17 & 18)	1
17	32610	Bolt, Connecting Rod	2
18	32609	Plate, Lock	1
20	27241	Lifter, Valve	2
21	33553	Camshaft (Mech. Compression Release)	1
22	29914	Pump Assembly, Oil	1
24	*26750A	Gasket, Mounting Flange	1
25	33901	Flange Assembly, Mounting (Incl. Nos. 27 thru 30)	1
26	*28833	Gasket, Oil Drain Plug	1
27	27244	Plug, Oil Drain	1
28	27897	Seal, Oil	1
29	33885	Plug, Oil Drain	1
30	30574	Shaft, Mech. Governor	1
31	30590A	Washer, Flat	1
32	33902	Gear Assembly, Governor	1
33	33903	Spool, Governor	1
34	29193	Ring, Retaining	2
35	650488	Screw, Hex Hd. Sems	6
36	29314A	Valve, Intake (Std.) (Incl. Nos. 38, 39 & 40)	1
36	29315B	Valve, Intake (1/32" Oversize) (Incl. Nos. 38, 39 & 40)	1
37	29313B	Valve, Exhaust (Std.) (Incl. Nos. 38, 39 & 40)	1
37	29315B	Valve, Exhaust (1/32" Oversize) (Incl. Nos. 38, 39 & 40)	1
38	31671	Cap, Upper Valve Spring	2
39	31672	Spring, Valve	2
40	31673	Cap, Lower Valve Spring	2
41	650489	Screw, Hex Hd. Sems w/flatwasher	2
42	610118	Cover, Spark Plug	1
43	33731	Body, Breather Tube	1
44	33732	Valve, Check	1
45	33733	Baffle, Breather	1
46	33734	Element, Breather	1
47	*33735	Gasket, Breather	1
48	33737	Cover, Breather	1
49	650768	Screw, Hex Hd. w/Conical Washer	2
50	33886	Tube, Breather	1
51	33887	Clip, Breather Tube	1
52	33888	Wire, Ground	1
53	27247	Key, Flywheel	1
54	32723	Pulley, Starter	1
54A	650791	Washer, Flat	1
55	650790	Washer, Belleville	1
56	650792	Nut, Flywheel	1
57	*33554	Gasket, Cylinder Head	1
58	33016	Head, Cylinder	1
59	26073	Washer	5
60	6021	Screw, Hex Hd. Cap	5
61	650697	Screw, Hex Hd. Cap	3
62	33892	Spacer	3
63	30593	Clip, Magneto Wire	1
64	33636	Plug, Spark (Champion J-8 or Equivalent)	1
65	*27234	Gasket, Valve Spring Cover	1
66	32755	Cover, Valve Spring Box	1
67	650128	Screw, Fil. Slotted Hd. Sems	2
68	*30188	Gasket, Intake Pipe	1
69	33004	Pipe, Intake	1
70	650451	Screw, Fil. Flex Hd. Self-locking	2
71	*31688	Gasket, Carburetor	1
72	6202	Screw, Hex Hd. Cap Sems	2
73	29752	Nut & Lockwasher	2
74	30705	Line, Fuel	1
75	26460	Clamp, Fuel Line	2
76	29443	Clip, Fuel Line	1
77	33086	Lever, R.P.M. Adjusting	1
81	33133	Link, Governor	1
82	33295	Link, Governor Spring	1
83	31361	Spring, Governor	1
85	33907	Housing, Blower	1
86	650497	Screw, Flex Pan Hd.	2
88	*30081	Gasket, Exhaust	1
89	33893	Tube, Oil Filler	1
90	33894	Dipstick, Oil (Incl. No. 91)	1
91	33590	"O" Ring	1
92	33895	Body, Air Cleaner	1
93	33896	Filter, Air	1
94	33897	Cover, Air Cleaner	1
95	650762	Screw, Fil. Hd. Mach. Sems	2
96	650784	Screw, Hex Hd. w/Flatwasher Thr'd Forming	1
97	*33051	Gasket, Air Cleaner	1
98	33904	Tank Fuel	1
99	28763	Screw, Hex Washer Hd. Thr'd Forming	2
100	590343	Rope Assembly, Starter	1
107	610900	Magneto (The complete magneto is not available as an assembly. The magneto number is shown for reference purposes only. Order component parts individually as shown in parts list.)	1
108	631831	Carburetor (Incl. No. 71)	1
110	33906	Gasket Set (Incl. Items Marked *)	1

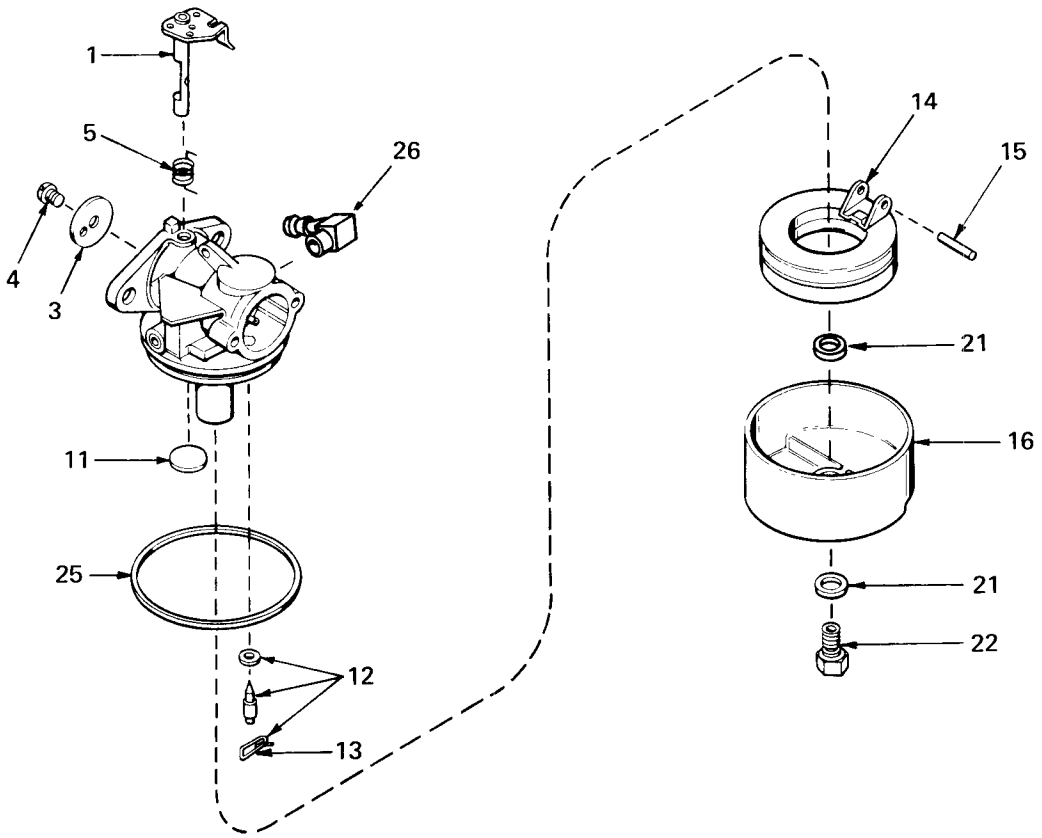

CARBURETOR NO. 631831

Ref. No.	Part No.	Description	No. Used
1	631615	Shaft & Lever Assy., Throttle	1
3	631616	Shutter, Throttle	1
4	650506	Screw	1
5	630731	Spring, Return	1
11	631027	Plug, Welch	1
12	631021	Inlet Needle, Seat & Clip Assy. (Incl. No. 13)	1
13	631022	Clip, Inlet Needle	1

Ref. No.	Part No.	Description	No. Used
14	631023	Float, Carburetor	1
15	631024	Shaft, Float	1
16	631700	Bowl Float	1
21	631334	Gasket, Bowl-to-body	2
22	631617	Nut, Float Bowl	1
25	631028	Gasket, Bowl-to-body	1
26	631807	Fitting, Fuel Inlet	1

PRODUCT CHANGES

In an effort to make improvements available to TORO owners as quickly as possible, minor changes are incorporated into Toro's products from time to time that do not become immediately shown in the Parts Catalog. If such a change apparently has been made in your unit, which is not reflected in your manual, see your TORO distributor or his Authorized TORO Service Dealer for information and part numbers.

IMPORTANT ORDERING INSTRUCTIONS

Repair parts are available from your Authorized TORO Service Dealer. To insure getting correct parts without delay, furnish the following information:

1. Serial number of your mower as shown on the name plate.
2. Part number, description, and quantity of each part required.
3. State whether parts should be shipped by mail or express. All repair parts are shipped F.O.B. Factory.
4. Name and address where parts are to be shipped.
5. Do not order by reference number; use part number only.

THE TORO PROMISE

It is Toro's policy to design and produce TORO products to provide our customers with a high level of performance and durability in normal operation. Our products, however, are produced in high volume, and it is inevitable that occasionally a unit will reach a customer with a defect in materials or workmanship which causes that unit to fall below the normal high level of TORO performance. Invariably, such a defect will be noticed in a residential product within one year, and in an institutional product within ninety days after purchase. Recognizing this possibility, Toro has established a simple guarantee policy and procedure that is intended to assure customer satisfaction. This guarantee statement is as follows:

The Toro Promise

The Toro Company promises to repair any TORO product for the original purchaser if defective in materials or workmanship. The following time periods from the date of purchase apply:

Residential products	1 year
Residential products used commercially	45 days
Institutional products	90 days

The costs of parts and labor are included, but the customer pays the transportation costs. Just return any residential product to an Authorized TORO Service Dealer, or any institutional product to a TORO distributor.

Should you feel that a product is defective, and wish to rely on The Toro Promise, the following procedure is recommended:

1. Contact any TORO dealer or distributor, but preferably the dealer or distributor from whom you purchased the product.
2. He will instruct you to either return the product to him, or tell you the name and address of your nearest Authorized TORO Service Dealer if the product is to be returned to such dealer.
3. Take the product and your original sales slip, or other evidence of purchase date, to the servicing dealer.
4. The servicing dealer will inspect the unit, advise you whether the product is defective and, if so, make all repairs necessary to correct the defect without extra charge to you.

If for any reason you are dissatisfied with the dealer's analysis of the defect or the service he performs, we urge you to contact us. Write:

TORO "Customer Care" Department
8111 Lyndale Avenue South
Bloomington, Minnesota 55420

MAINTENANCE RECORD

Date	Hours Used	Oil Change	Air Cleaner Service	Lubrication	Winter Storage	Spring Service	Spark Plug Gap

Litho in U.S.A.