Form No. 3325-997

TORO®

Workman® 2100

Air-Cooled Gasoline Utility Vehicle

07253TC—210000501 and Up

Operator's Manual

CE

English (GB)

WARNING

The engine exhaust from this product contains chemicals known to the State of California to cause cancer, birth defects, or other reproductive harm.

The engine in this product is not equipped with a spark arrester muffler. It is a violation of California Public Resource Code Section 4442 to use or operate this engine on any forest-covered, brush-covered, or grass-covered land as defined in CPRC 4126. Other states or federal areas may have similar laws.

This spark ignition system complies with Canadian ICES-002.

Ce système d'allumage par étincelle de véhicule est conforme à la norme NMB-002 du Canada

Contents

Contents 2

Introduction 3

Safety 3
- Safe Operating Practices 4
- Slope Chart 9

Specifications 12
- Checking the Crankcase Oil 13
- Checking the Tire Pressure 13
- Fuel Tank 13
- Before Operating 13

Operation 14
- Think Safety First 14
- Controls 14
- Pre-Starting Checks 16
- Starting the Engine 17
- Stopping the Vehicle 17
- Parking the Vehicle 17
- Cargo Bed 17
- Tailgate Latches 18
- New Vehicle Break-in 18
- Transporting the Vehicle 19
- Towing the Vehicle 19
- Towing a Trailer 19

Maintenance 20
- Daily Maintenance Checklist 21
- Heavy-Duty Operation 22
- Jacking the Vehicle 22
- Neutral Lock Assembly 23
- Servicing the Engine Oil 23
- Cleaning the Engine Cooling Areas 24
- Servicing the Air Cleaner 24
- Greasing the Machine 26
- Servicing the Brakes 26
- Inspecting Tires 27
- Adjusting the Front Suspension 27
- Servicing the Drive Belt 27
- Adjusting the Starter Generator Belt 28
- Adjusting Front Wheel Toe-in 28
- Servicing the Fuel System 29
- Spark Plugs 29
- Changing Transaxle Fluid 30
- Fuses 31
- Replacing the Headlights 31
- Servicing the Battery 31
- Washing the Vehicle 33

@2001 by The Toro Company
8111 Lyndale Avenue South
Bloomington, MN 55420-1196

All Rights Reserved

Introduction

Read this manual carefully to learn how to operate and maintain your product correctly. The information in this manual can help you and others avoid injury and product damage. Although Toro designs and produces safe products, you are responsible for operating the product properly and safely.

Whenever you need service, genuine Toro parts, or additional information, contact an Authorized Service Dealer or Toro Customer Service and have the model and serial numbers of your product ready. Figure 1 illustrates the location of the model and serial numbers on the product.

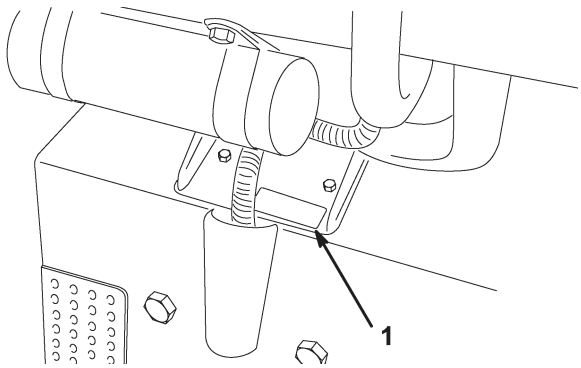

Figure 1

1. Location of the model and serial number plate

Write the product model and serial numbers in the

Model No: _____

Serial No.: _____

space below.

This manual identifies potential hazards and has special safety messages that help you and others avoid personal injury, even death. ***Danger***, ***Warning*** and ***Caution*** are signal words used to identify the level of hazard. However, regardless of the hazard, be extremely careful.

Danger signals an extreme hazard that *will* cause serious injury or death if you do not follow the recommended precautions.

Warning signals a hazard that *may* cause serious injury or death if the recommended precautions are not followed.

Caution signals a hazard that may cause minor or moderate injury if the recommended precautions are not followed.

The manual uses two other words to highlight information. **Important** calls attention to special mechanical information and **Note:** emphasizes general information worthy of special attention.

Safety

Improper use or maintenance by the operator or owner can result in injury. To reduce the potential for injury, comply with these safety instructions and always pay attention to the safety alert symbol, which means CAUTION, WARNING, or DANGER—"personal safety instruction." Failure to comply with the instruction may result in personal injury or death.

Supervisors, operators, and service persons should be familiar with the following standards and publications: (The material may be obtained from the address shown).

- Flammable and Combustible Liquids Code: ANSI/NFPA 30

- National Fire Protection Association: ANSI/NFPA # 505; Powered Industrial Trucks
  National Fire Prevention Association
  Barrymarch Park
  Quincy, Massachusetts 02269 U. S. A.

- ANSI/ASME B56.8 Personal Burden Carriers
  American National Standards Institute, Inc. 1430 Broadway New York, New York 10018 U.S.A.

- ANSI/UL 558; Internal Combustion Engine Powered Industrial Trucks
  American National Standards Institute, Inc.
  1430 Broadway

New York, New York 10018 U. S. A.
or
Underwriters Laboratories
333 Pfingsten Road
Northbrook, Illinois 60062 U.S.A.

WARNING

The Workman is an off-highway vehicle only and is not designed, equipped, or manufactured for use on public streets, roads, or highways.

Safe Operating Practices

Supervisor's Responsibilities

- Make sure that operators are thoroughly trained and familiar with the operator's manual and all labels on the vehicle.
- Be sure to establish your own special procedures and work rules for unusual operating conditions (e.g., slopes too steep for vehicle operation).

Before Operating

- Operate the machine only after reading and understanding the contents of this manual.
- **Never** allow children to operate the vehicle. Anyone who operates the vehicle should have a motor vehicle license.
- **Never** allow other adults to operate the vehicle without first reading and understanding the Operator's Manual. Only trained and authorized persons should operate this vehicle. Make sure that all operators are physically and mentally capable of operating the vehicle.
- This vehicle is designed to carry **only you**, the operator, and **one passenger** in the seat provided by the manufacturer. **Never** carry any other passengers on the vehicle.
- **Never** operate the vehicle when under the influence of drugs or alcohol. Even prescription drugs and cold medicines can cause drowsiness.
- Do not drive the vehicle when you are tired. Be sure to take occasional breaks. It is very important that you stay alert at all times.
- Become familiar with the controls and know how to stop the engine quickly.
- Keep all shields, safety devices, and decals in place. If a shield, safety device, or decal is malfunctioning, illegible, or damaged, repair or replace it before operating the machine.
- Always wear substantial shoes. Do not operate the machine while wearing sandals, tennis shoes or sneakers. Do not wear loose fitting clothing or jewelry which could get caught in moving parts and cause personal injury.
- Wearing safety glasses, safety shoes, long pants and a helmet is advisable and required by some local safety and insurance regulations.
- Avoid driving when it is dark, especially in unfamiliar areas. If you must drive when it is dark, be sure to drive cautiously, use the headlights, and even consider adding additional lights.
- Be extremely careful when operating around people. Always be aware of where bystanders might be.
- Before operating the vehicle, always check the designated areas of the vehicle that are stated in the pre-starting section of this manual. If something is wrong, do **not** use the vehicle. Make sure that the problem is corrected before the vehicle or attachment is operated.
- Since gasoline is highly flammable, handle it carefully.
  - Use an approved gasoline container.
  - Do not remove the cap from the fuel tank when the engine is hot or running.
  - Do not smoke while handling gasoline.
  - Fill the fuel tank outdoors, and fill it to about 1 in. (25 mm) below the top of the tank (the

bottom of the filler neck). Do not overfill it.

– Wipe up any spilled gasoline.

While Operating

WARNING

Engine exhaust contains carbon monoxide, which is an odorless, deadly poison that can kill you.

Do not run engine indoors or in an enclosed area.

- The operator and passenger should remain seated whenever the vehicle is in motion. The operator should keep both hands on the steering wheel whenever possible, and the passenger should use the hand holds provided. Keep your arms and legs within the vehicle body at all times.

- Drive slower and turn less sharply when you are carrying a passenger. Remember your passenger may not be expecting you to brake or turn and may not be ready.

- Always watch out for and avoid low overhangs such as tree limbs, door jambs, and over- head walkways. Make sure there is enough room over head to easily clear the vehicle and your head.

- Always shift into neutral and apply the parking brake before leaving an idling vehicle, or else the vehicle may creep.

- Failure to operate the vehicle safely may result in an accident, tip over of the vehicle, and serious injury or death. Drive carefully. To prevent tipping or loss of control:

  – Use extreme caution, reduce speed, and maintain a safe distance around sand traps, ditches, creeks, ramps, unfamiliar areas, or any areas that have abrupt changes in ground conditions or elevation.

  – Watch for holes or other hidden hazards.

  – Use extra caution when operating the vehicle on wet surfaces, in adverse weather conditions, at higher speeds, or with a full load. Stopping time and distance will increase with a full load.

  – Avoid sudden stops and starts. Do not go from reverse to forward or forward to reverse without first coming to a complete stop.

  – Slow down before turning. Do not attempt sharp turns or abrupt maneuvers or other unsafe driving actions that may cause a loss of vehicle control.

  – When dumping, do not let anyone stand behind the vehicle and do not dump the load on anyone's feet. Release the tailgate latches from the side of the box, not from behind.

  – Only operate the vehicle when the cargo box is down and latched.

  – Before backing up, look to the rear and ensure that no one is behind you. Back up slowly.

  – Watch out for traffic when you are near or crossing roads. Always yield the right of way to pedestrians and other vehicles. This vehicle is not designed for use on streets or highways. Always signal your turns or stop early enough so that other people know what you plan to do. Obey all traffic rules and regulations.

  – The electrical and exhaust systems of the vehicle can produce sparks capable of igniting explosive materials. Never operate the vehicle in or near an area where there is dust or fumes in the air which are explosive.

  – If you are ever unsure about safe operation, **stop work** and ask your supervisor.

- Do not touch the engine or muffler while the engine is running or soon after it has stopped. These areas may be hot enough to cause burns.

- If the machine ever vibrates abnormally, stop immediately, wait for all motion to stop, and inspect the vehicle for damage. Repair all damage before commencing operation.

- Before getting off of the seat:

  A. Stop the movement of the machine.

  B. Set the parking brake.

  C. Turn the ignition key to Off.

  D. Remove the ignition key.

Note: If the vehicle is on an incline, block the wheels after getting off of the vehicle.

Braking

- Slow down before you approach an obstacle. This gives you extra time to stop or turn away. Hitting an obstacle can damage the vehicle and its contents. More important, it can injure you and your passenger.

- Gross Vehicle Weight (GVW) has a major impact on your ability to stop and/ or turn. Heavy loads and attachments make a vehicle harder to stop or turn. The heavier the load, the longer it takes to stop.

- Decrease the vehicle speed if the cargo box has been removed and there is no attachment on the vehicle. The braking characteristics change and fast stops may cause the rear wheels to lock up, which may affect the control of the vehicle.

- Turf and pavement are much slipperier when they are wet. It can take 2 to 4 times as long to stop on wet surfaces as on dry surfaces. If you drive through standing water deep enough to get the brakes wet, they will not work well until they are dry. After driving through water, you should test the brakes to make sure they work properly. If they do not, drive slowly while putting light pressure on the brake pedal. This will dry the brakes out.

Operating on Hills

WARNING

Operating the vehicle on a hill may cause tipping or rolling of the vehicle, or the engine may stall and you could lose headway on the hill. This could result in personal injury.

- Do not exceed slopes greater than 12°.
- Do not accelerate quickly or slam on the brakes when backing down a hill, especially with a load.
- If the engine stalls or you lose headway on a hill, slowly back straight down the hill. Never attempt to turn the vehicle around.
- Never drive across a steep hill; always drive straight up or down or go around the hill.
- Avoid turning on a hill.
- Reduce your load and the speed of the vehicle.
- Avoid stopping on hills, especially with a load.

These extra cautions need to be taken when operating the vehicle on a hill:

- Slow down before starting up or down a hill.

- If the engine stalls or you begin to lose headway while climbing a hill, gradually apply the brakes and slowly back straight down the hill.

- Turning while traveling up or down hills can be dangerous. If you have to turn while on a hill, do it slowly and cautiously. Never make sharp or fast turns.

- Heavy loads affect stability. Reduce the weight of the load and your speed when operating on hills or if the load has a high center of gravity. Secure the load to prevent it from shifting.

- Avoid stopping on hills, especially with a load. Stopping while going down a hill will take longer than stopping on level ground. If the vehicle must be stopped, avoid sudden speed changes, which may initiate tipping or rolling of the vehicle. Do

not slam on the brakes when rolling backward, as this may cause the vehicle to overturn.

- Travel straight up and down slopes whenever possible.

- We strongly recommend installing the optional roll-over protection kit when operating on hilly terrain.

Operating on Rough Terrain

Reduce speed and load when operating on rough terrain, uneven ground, and near curbs, holes, and other sudden changes in terrain. Loads may shift, causing the vehicle to become unstable.

We strongly recommend installing the optional roll-over protection kit when operating on rough terrain.

WARNING

Sudden changes in terrain may cause abrupt steering wheel movement, possibly resulting in hand and arm injuries.

- Reduce your speed when operating on rough terrain and near curbs.
- Grip the steering wheel loosely around the perimeter. Keep your hands clear of the steering wheel spokes.

Loading and Dumping

The weight and position of the cargo and passenger can change the vehicle center of gravity and vehicle handling. To avoid loss of control and personal injury, follow these guidelines:

- Do **not** carry loads which exceed the load limits described on the vehicle weight label; refer to *Specifications*, page 12, for vehicle weight limits. The load rating is for **level surfaces only**.

- Reduce the weight of the load when operating on hills and rough terrain to avoid tipping or overturning of the vehicle.

- Reduce the weight of the load if the center of gravity is high. Items such as bricks, fertilizer, or landscape timbers stack higher in the box. The higher a load is stacked, the more likely the vehicle is to tip over. Distribute the load as low as possible, making sure that the load does not affect rear visibility.

- Position the weight of the load evenly from side to side. If you position the load toward one of the sides, the vehicle is more likely to tip over while turning.

- Position the weight of a load evenly from front to back. If you position the load behind the rear axle, it will reduce the weight on the front wheels. This may result in a loss of steering control or cause the vehicle to tip over on hills or bumpy terrain.

- Use extra caution if the load exceeds the dimensions of the box and when handling off-center loads that cannot be centered. Keep loads balanced and secure to prevent them from shifting.

WARNING

The weight of the box may be heavy. Hands or other body parts could be crushed.

- Keep hands and other body parts clear when lowering the box.
- Do not dump materials on bystanders.

- Never dump a loaded cargo box while the vehicle is sideways on a hill. The change in weight distribution may cause the vehicle to overturn.

- When operating with a heavy load in the cargo box, reduce your speed and allow for sufficient braking distance. Do not suddenly apply the brakes. Use extra caution on slopes.

- Be aware that heavy loads increase your stopping distance and reduce your ability to turn quickly without tipping over.

- The rear cargo space is intended for load carrying

purposes only, not for passengers.

- Never overload your vehicle. The name plate (located under dash on center column) shows load limits for the vehicle. Never overload the attachments or exceed the gross vehicle weight.

Maintenance

- Only qualified and authorized personnel shall be permitted to maintain, repair, adjust, or inspect the vehicle.

- Before servicing or making adjustments to the machine, stop the engine, set the parking brake, and remove the key from the ignition to prevent someone from accidentally starting the engine.

- To make sure that the entire machine is in good condition, keep all nuts, bolts, and screws properly tightened.

- To reduce the potential for fire, keep the engine area free of excessive grease, grass, leaves, and accumulation of dirt.

- Never use an open flame to check the level or leakage of fuel or battery electrolyte.

- If the engine must be running to perform a maintenance adjustment, keep your hands, feet, clothing, and any parts of your body away from the engine and any moving parts. Keep everyone away.

- Do not use open pans of fuel or flammable cleaning fluids for cleaning parts.

- Do not adjust the ground speed governor. To ensure safety and accuracy, have an authorized Toro distributor check the ground speed.

- If major repairs are ever needed or assistance is required, contact an authorized Toro distributor.

- To be sure of optimum performance and safety, always purchase genuine Toro replacement parts and accessories. Replacement parts and accessories made by other manufacturers could be dangerous. Altering this vehicle in any manner that may affect vehicle operation, performance, durability, or its use, may result in injury or death. Such use could void the product warranty.

Sound Pressure Level

This unit has an equivalent continuous A-weighted sound pressure at the operator ear of: 80 dB(A) based on measurements of identical machines per J1174-MAR 85 procedures.

Vibration Level

This unit does not exceed a vibration level of 2.5 m/s^2 at the hands based on measurements of identical machines per ISO 5349 procedures.

This unit does not exceed a vibration level of 2.5 m/s^2 at the posterior based on measurements of identical machines per ISO 2631 procedures.

Slope Chart

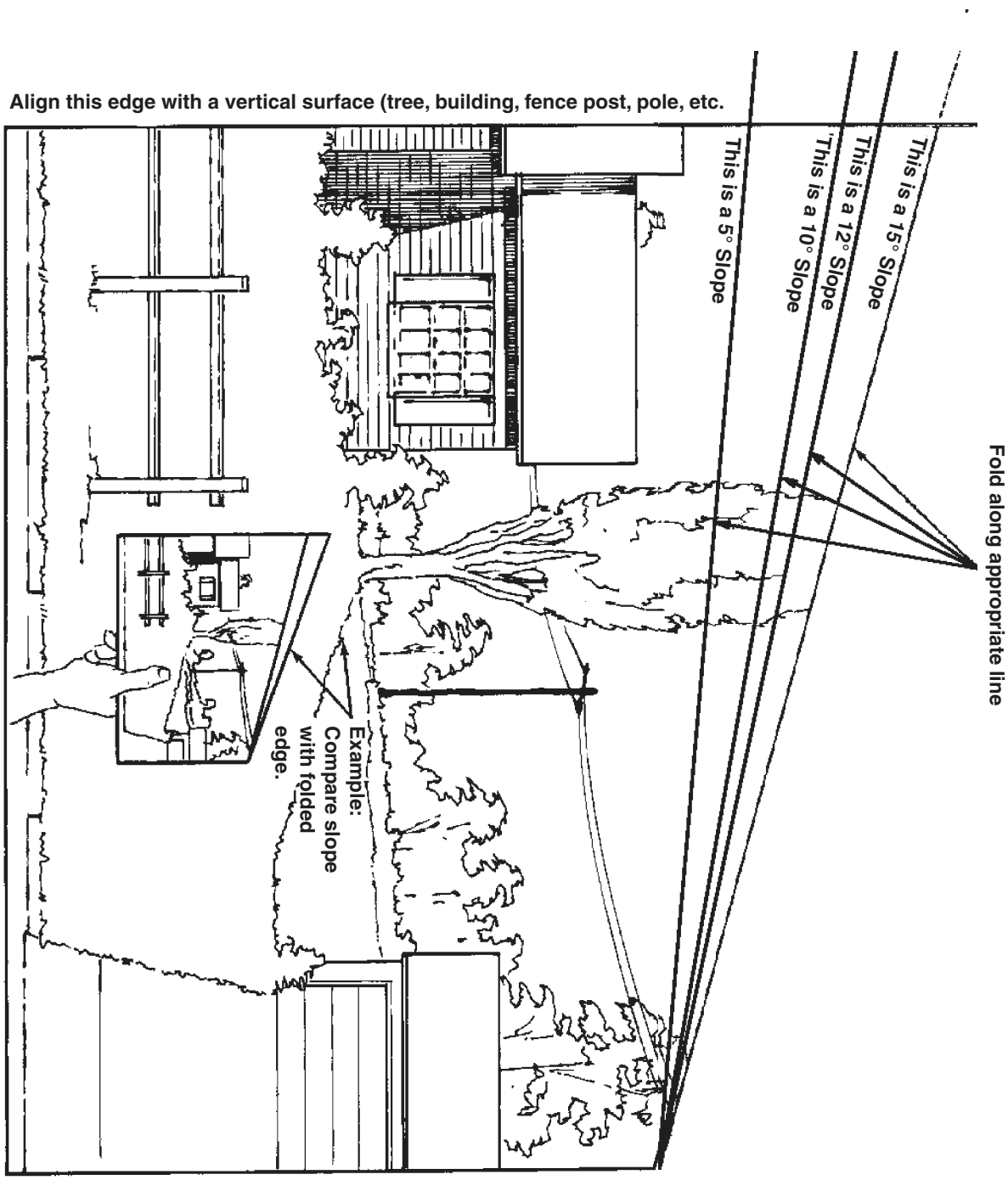
Align this edge with a vertical surface (tree, building, fence post, pole, etc.
This is a 5° Slope
This is a 10° Slope
This is a 12° Slope
This is a 15° Slope
Fold along appropriate line
Example:
Compare slope with folded edge.

Safety and Instruction Decals

Safety decals and instructions are easily visible to the operator and are located near any area of potential danger. Replace any decal that is damaged or lost.

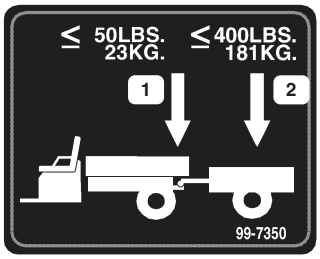

99-7350

1. Maximum tongue weight is 23 kg (50 lbs.)
2. Maximum trailer weight is 181 kg (400 lbs.)

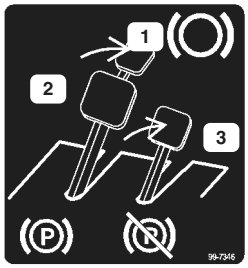

99-7346

1 Parking brake
2. Parking brake on
3. Parking brake off

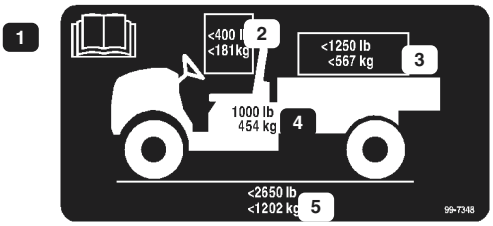

99-7348

1. Read the operator's manual for further instructions.
2. The maximum combined operator and passenger weight should not exceed 181 kg (400 lbs.).
3. The maximum cargo weight should not exceed 567 kg. (1250 lbs.).
4. The base weight of the vehicle is 454 kg (1000 lbs.).
5. The maximum gross vehicle weight should not exceed 1202 kg (2650 lbs.).

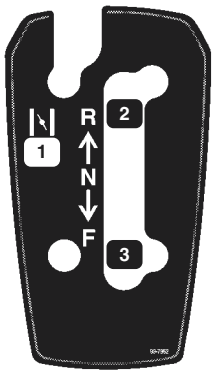

99-7952

1. Choke
2. Reverse
3. Forward

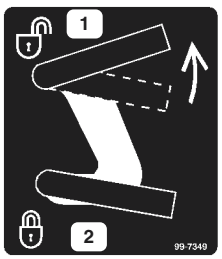

99-7349

1. Unlock cargo bed
2. Lock cargo bed



99-7954

1. Danger—read the operator's manual
2. Do not carry passengers in the cargo bed. They may fall out.
3. Explosive hazard—remove fuel containers from the cargo bed before filling

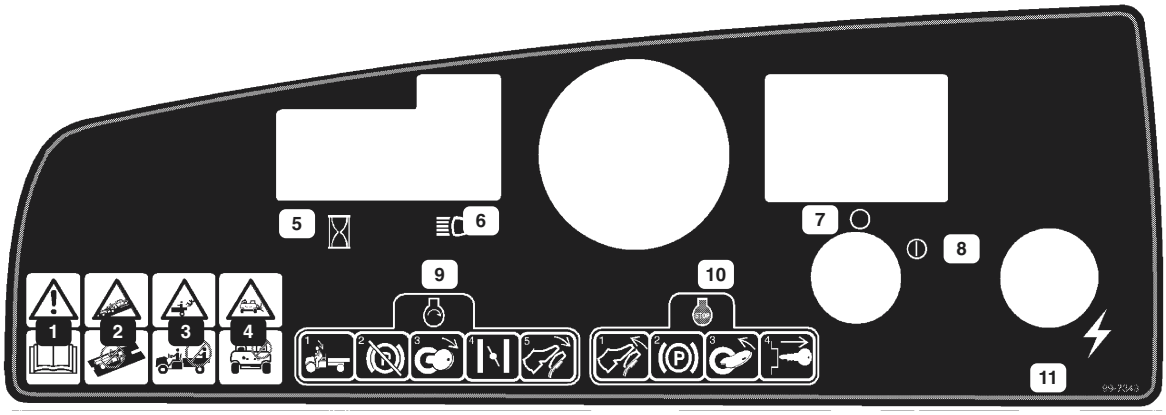

99-7343

1. Warning—read the operator's manual.
2. Only drive this vehicle off- highway. This vehicle is not made for use on public streets, roads, or highways.
3. Do not carry passengers in the cargo bed. They may fall out of the vehicle.
4. Do not allow children to operate this vehicle.
5. Hour meter
6. Headlights
7. Ignition off
8. Ignition on
9. To start the vehicle, sit in the operator's seat. Release the parking brake. Turn the ignition on. Pull the choke lever out (if needed). Depress the accelerator.
10. To stop the vehicle, disengage the accelerator and engage the parking brake. Turn the ignition off and remove the key.
11. Power point

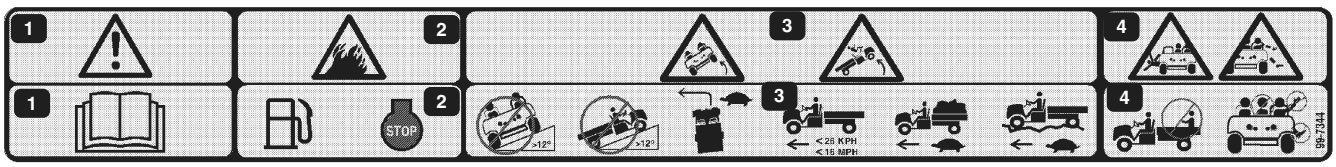

99-7344

1. Danger—read the operator's manual.
2. Fuel is flammable. Stop the engine before adding fuel.
3. Tipping hazard—do not drive across slopes that are greater than 15 degrees or up slopes greater than 12 degrees. Reduce speed when turning, carrying heavy loads, or driving on rough terrain. Keep the engine speed under 26kmh (16 MPH).
4. Passengers are at risk of falling from the vehicle. Do not carry passengers in the cargo bed. Keep arms and legs inside of the vehicle at all times.

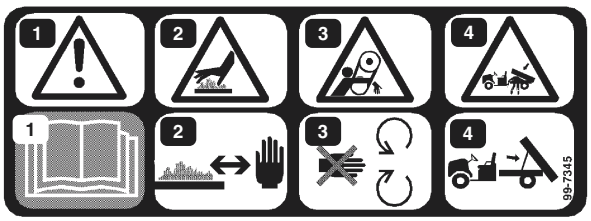

99-7345

1. Danger—read the operator's manual.
2. Hot surface hazard—keep hands away.
3. Entanglement hazard—stay away from moving parts.
4. Crushing hazard—use the prop rod to support the cargo bed.

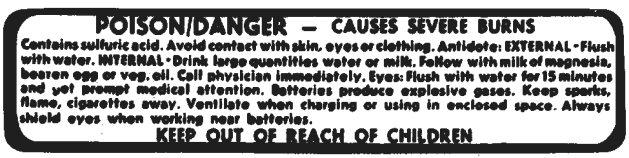

26-7390

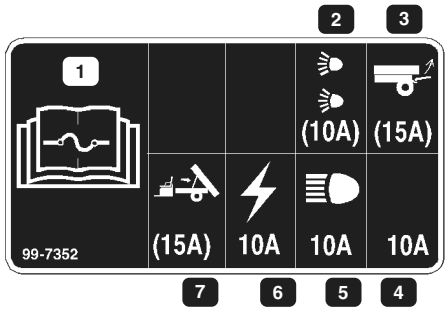

99-7352

1. Read the operator's manual for information on fuses.
2. 10-amp. fuse for optional road light kit
3. 15-amp. fuse for optional rear lift kit
4. 10-amp. fuse—open
5. 10-amp. fuse for headlights
6. 10-amp. fuse for ignition system
7. 15-amp. fuse for optional electric bed lift kit

Specifications

Note: specifications and design are subject to change without notice.

Base weight	Dry 454kg (1000 lbs.)
Rated capacity (on level ground)	749 kg (1650 lbs.) total, including 90.7 kg (200 lbs.) operator and 90.7 kg passenger, load, trailer tongue weight, gross trailer weight, accessories, and attachments
Maximum gross vehicle weight (on level ground)	1203 kg (2650 lbs.) total, including all the weights listed above
Maximum cargo capacity (on level ground)	567 kg (1250 lbs.)total, including trailer tongue weight and gross trailer weight
Tow capacity:	
Standard Hitch	Tongue weight 23 kg. Maximum trailer weight 182 kg.
Heavy Duty Hitch	Tongue weight 45 kg. Maximum trailer weight 363 kg.
Overall width	152.4 cm (60 in.)
Overall length	297.2 cm (117 in.)
Ground clearance	23.5 cm at the front with no load or operator 16.5 cm at the rear with no load or operator
Wheel base	200.7 cm
Wheel tread (center line to center line)	124.5 cm in the front 122.6 cm in the rear
Cargo box length	116.8 cm inside, 129.5 cm outside
Cargo box width	124.5 cm inside, 137.2 cm outside
Cargo box height	25.4 cm inside

Before Operating

Checking the Crankcase Oil

The engine is shipped with oil in the crankcase; however, the oil level must be checked before and after the engine is first started.

1. Position the machine on a level surface.

2. Remove the dipstick and wipe it with a clean cloth (Fig. 2). Insert the dipstick into the tube and make sure it is seated fully. Remove the dipstick and check the level of oil.

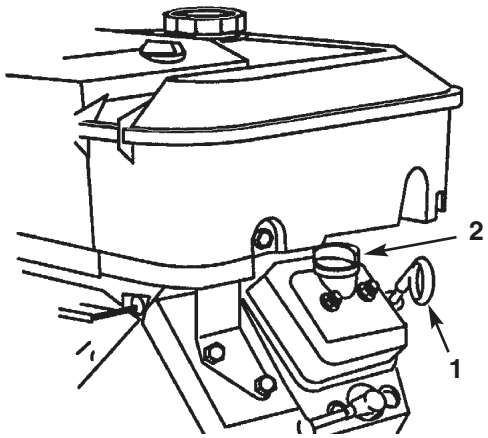

Figure 2

1. Dipstick
2. Filler cap

3. If the oil level is low, remove the filler cap from the valve cover (next to the dipstick) and pour oil into the opening until the oil level is up to the "FULL" mark on the dipstick; refer to Engine Oil, page 23 Add the oil slowly and check the level often during this process. **Do not overfill.**

4. Install the dipstick firmly in place.

Checking the Tire Pressure

Check tire pressure every 8 hours or daily to assure proper levels. Air pressure range in front and rear tires is 55–152 kPa (8–22 psi).

The needed air pressure is determined by the payload carried. The ***lower*** the air pressure, the less the compaction and tire marks are minimized. Lower pressure should not be used for heavy payloads at high speeds.

Higher pressures should be used for heavier payloads at higher speeds. Do not exceed the maximum pressure.

Fuel Tank

DANGER

In certain conditions, gasoline is extremely flammable and highly explosive. A fire or explosion from gasoline can burn you and others and can damage property.

- Fill the fuel tank outdoors, in an open area, when the engine is cold. Wipe up any gasoline that spills.
- Do not fill the fuel tank completely full. Add gasoline to the fuel tank until the level is 25 mm (1 in.) below the bottom of the filler neck. This empty space in the tank allows gasoline to expand.
- Never smoke when handling gasoline, and stay away from an open flame or where gasoline fumes may be ignited by a spark.
- Store gasoline in an approved container and keep it out of the reach of children. Never buy more than a 30-day supply of gasoline.
- Always place gasoline containers on the ground away from your vehicle before filling.
- Do not fill gasoline containers inside a vehicle or on a truck or trailer bed because interior carpets or plastic truck bed liners may insulate the container and slow the loss of any static charge.
- When practical, remove gas- powered equipment from the truck or trailer and refuel the equipment with its wheels on the ground.
- If this is not possible, then refuel such equipment on a truck or trailer from a portable container, rather than from a gasoline dispenser nozzle.
- If a gasoline dispenser nozzle must be used, keep the nozzle in contact with the rim of the fuel tank or container opening at all times until fueling is complete.

Recommended Gasoline

Use fresh, clean, **unleaded** regular grade gasoline

suitable for automotive use (85 pump octan minimum). Leaded gasoline may be used if unleaded regular is not available.

Important Never use gasoline containing **methanol**, gasoline containing more than 10% ethanol, gasoline additives, or white gas because engine fuel system damage could result.

Filling the Fuel Tank

Fuel tank capacity is approximately 26.5 L (7 gallons).

1. Shut the engine off and set the parking brake.

2. Clean the area around the fuel tank cap (Fig. 3).

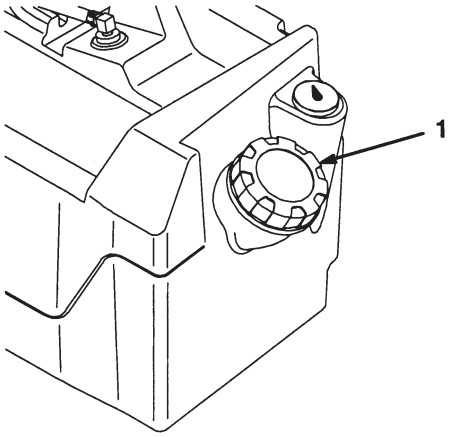

Figure 3

1. Fuel tank cap

3. Remove the fuel tank cap.

4. Fill the tank to about one inch below the top of the tank, (bottom of the filler neck). This space in the tank allows gasoline to expand. **Do not overfill.**

5. Install the fuel tank cap securely. Wipe up any fuel that may have spilled.

Operation

Note: Determine the left and right sides of the machine from the normal operating position.

Think Safety First

Please carefully read all the safety instructions and symbols in the safety section. Knowing this information could help you or bystanders avoid injury.

Controls

Accelerator Pedal

The accelerator pedal (Fig. 4) gives the operator the ability to vary ground speed of the vehicle. Depressing the pedal starts the engine. Depressing the pedal farther increases ground speed. Releasing the pedal will slow the vehicle and the engine will stop running. Maximum forward speed is 26 kmh (16 MPH)

Brake Pedal

The brake pedal is used to stop or slow the vehicle (Fig. 4).

CAUTION

Brakes can become worn or can be misadjusted, resulting in personal injury.

If the brake pedal travels within 2.5cm (1”) of the vehicle floor board, the brakes must be adjusted or repaired.

Parking Brake

The parking brake is a small plate at the top of the brake pedal (Fig. 4). Whenever the engine is shut off, the parking brake must be engaged to prevent accidental movement of the vehicle. To engage the parking brake, step on the brake pedal firmly and roll forward with the top of your foot. To disengage, depress the accelerator pedal. If the vehicle is parked

on a steep grade, make sure the parking brake is applied. Place blocks at the downhill side of the wheels.

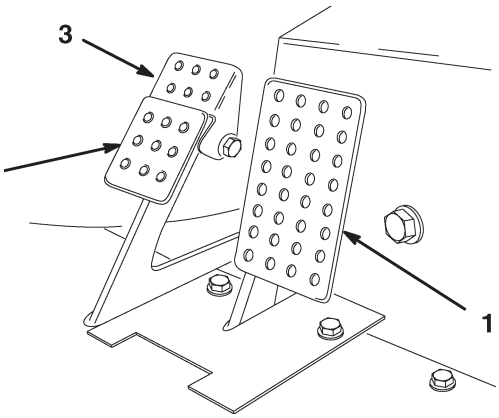

Figure 4

1. Accelerator pedal
2. Brake pedal
3. Parking brake

Choke Control

The choke control is located below and to the right of the operator's seat. To start a cold engine, close the carburetor choke (Fig. 5) by pulling the choke control outward to ON position. After the engine starts, regulate the choke to keep the engine running smoothly. As soon as possible, open the choke by pushing the control in to the OFF position. A warm engine requires little or no choking.

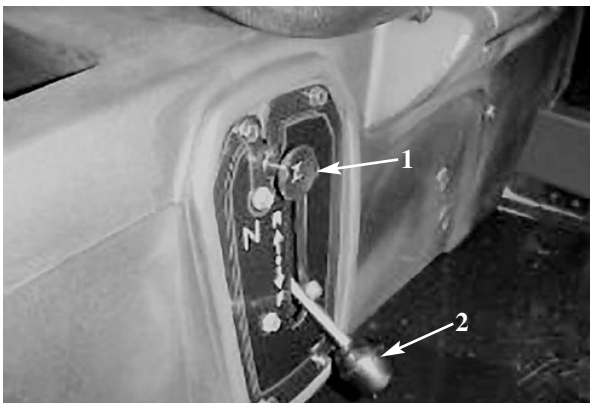

Figure 5

1. Choke
2. Gear shift selector

Gear Shift Selector

The gear shift selector moves the vehicle in the desired direction forward or reverse (Fig. 5). The vehicle will start in either direction.

Note: If the gear shift selector is in reverse when the ignition is turned on, a buzzer will sound to warn the operator.the

Important : The vehicle should always be stopped before changing the gear selection and direction.

Ignition Switch

The ignition switch (Fig. 6), used to start and stop the engine, has two positions: OFF and ON. Turn the key clockwise-ON position-to allow operation. When the vehicle is stopped, turn the key counterclockwise to THE OFF position. Remove the key from the ignition.

Hour Meter

The hour meter (Fig. 6) indicates the total number of hours the engine is running. The hour meter starts to function whenever the accelerator is depressed.

Oil Light

The oil light warns the operator if the engine oil pressure drops below a safe level (Fig. 6). If the light comes on and remains lit, the oil level should be checked and oil added if necessary; see *Engine Oil*, page 23.

Note: The oil light may flicker. This is normal and no action needs to be taken.

Light Switch

Toggle switch to activate headlights. Push to turn lights "ON" (Fig. 6).

Power Point

The power point is used to power optional electrical accessories (Fig. 6).

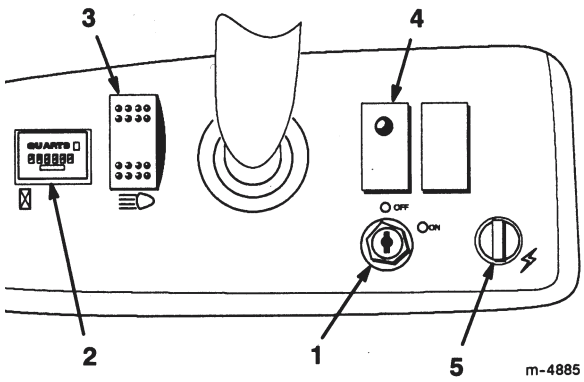

Figure 6

1. Ignition switch
2. Hour meter
3. Light switch
4. Oil light
5. Power point

Fuel Gauge

The fuel gauge (Fig. 7) shows amount of fuel in the tank.

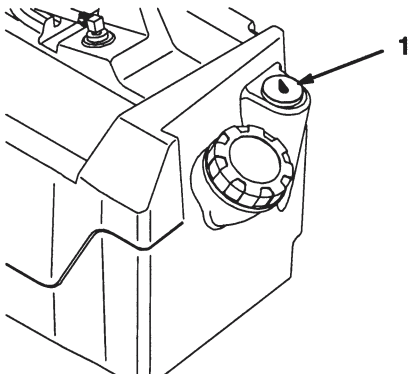

Figure 7

1. Fuel gauge

Passenger Hand Holds

The passenger hand holds are located on the right side of the dash panel and at the outside of each seat (Fig. 8).

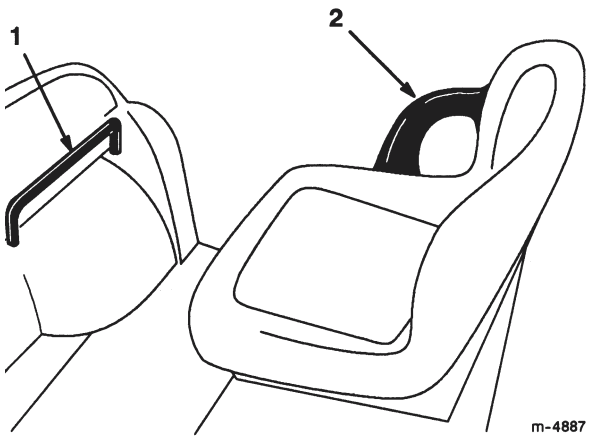

Figure 8

1. Passenger hand hold
2. Hip restraint

Pre-Starting Checks

Safe operation begins before taking the vehicle out for a day's work. You should check these items each time:

- Check tire pressure.

  Note: These tires are different than car tires, they require less pressure to minimize turf compaction and damage.

- Check all fluid levels and add the appropriate amount of Toro specified fluids, if any are found to be low.

- Check brake pedal operation.

- Check to see that the lights are working.

- Turn the steering wheel to the left and right to check steering response.

- Check for oil leaks, loose parts and any other noticeable malfunctions. Make sure the engine is off and all moving parts have stopped before checking for oil leaks, loose parts and other malfunctions

If any of the above items are not correct, notify your mechanic or check with your supervisor before taking the vehicle out for the day. Your supervisor may want you to check other items on a daily basis, so ask what your responsibilities are.

Starting the Engine

1. Sit in the operator's seat, insert the key into the ignition switch, and turn the key clockwise to the On position.

   Note: If the gear shift selector is in reverse, the buzzer will sound to warn the operator.

2. Move gear shift selector to the desired position.

4. Slowly step on the accelerator pedal.

   Note:The parking brake will automatically disengage when the accelerator pedal is depressed.

   Note: If the engine is cold, depress and hold the accelerator pedal about half way down and pull the choke knob out to the ON position.

   Important Do not attempt to push or tow the vehicle to get it started.

Stopping the Vehicle

To stop the machine, remove your foot from the accelerator pedal and slowly depress the brake pedal.

Parking the Vehicle

1. Engage the parking brake and turn the ignition key to OFF.

2. Remove the key from switch to prevent accidental starting.

Cargo Bed

Raising the Bed

1. Slide the latch upward toward the top of the cutout in the bed frame (Fig. 9).

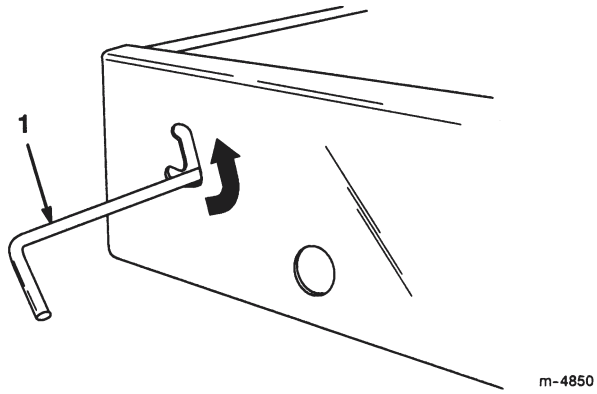

Figure 9

1. Latch

2. Lift up on the latch with one hand while raising the bed with your other hand.

3. Raise the bed to its full height; then lower it slightly to engage the prop rod (Fig. 10).

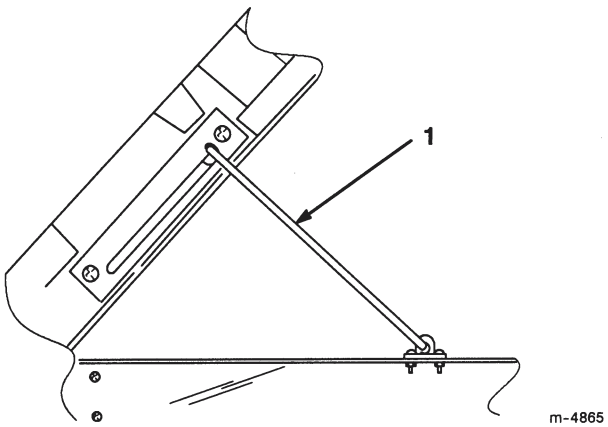

Figure 10

1. Prop rod

Lowering the Bed

1. Lift up the bed slightly with one hand while pressing down on the prop rod.

2. Lower the bed until the latch engages.

3. To secure the bed tightly to the bed frame, move the latch to the lower section of the cutout.

Tailgate Latches

1. To open the tailgate latches, lift the latch handles up (Fig. 11). The latches will spring out toward the center of the tailgate. Slowly lower the tailgate.

   Note: You may need to push the end of the tailgate in (especially if there is a load against the tailgate) before the latches will spring toward the center of the tailgate and release.

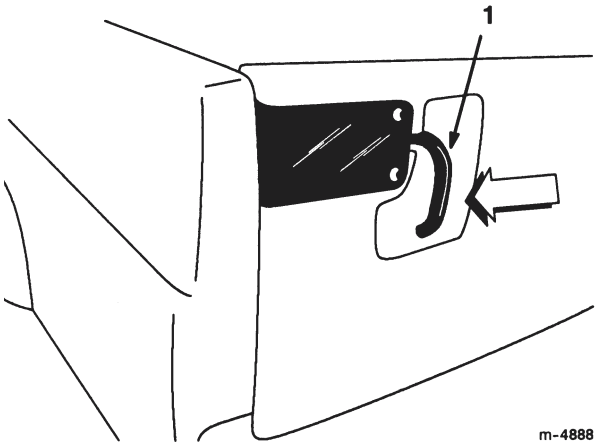

Figure 11

1. Tailgate latch

2. To close the tailgate latches, lift the handles upward and slide them toward the outside of the vehicle.

3. Push the latch handles downward to secure the latch and tailgate.

New Vehicle Break-in

To provide proper performance and long vehicle life, follow these guidelines for the first 100 operating hours.

- Check the fluid and engine oil levels regularly and be alert for indications of overheating in any component of the vehicle.
- After starting a cold engine, let it warm up for about 15 seconds before accelerating.
- Avoid hard braking situations for the first several hours of new vehicle brake-in operation. New brake linings may not be at optimum performance until several hours of use has caused the brakes to become burnished (broke-in).
- Vary vehicle speeds during operation. Avoid fast starts and quick stops.
- A break-in oil for the engine is not required. Original engine oil is the same type specified for regular oil changes.
- Refer to the *Maintenance* section of the operator's manual for any special low hour checks.
- Check front suspension positioning and adjust if necessary; refer to *Adjusting the Front Suspension*, page 27

Loading the Cargo Box

The capacity of the cargo box is 13 ft.^{3} (0.37 m ^{3}). The amount (volume) of material that can be placed in the box without exceeding the vehicle load ratings can vary greatly depending on the density of the material. For example, a level box of wet sand weighs 680 kg (1500 lbs.), which exceeds the load rating by 295 kg (650 lbs.). But a level box of wood weighs 295 kg (650 lbs.), which is under the load rating.

See the able below for load volume limits with various materials:

Material	Density (lbs./ft.^{3})	Max. cargo box capacity (on level ground)
Gravel		
Dry	95	¾ full (approx.)
Wet	120	½ full (approx.)
Sand		
Dry	90	¾ full
Wet	120	½ full
Wood	45	Full
Bark	<45	Full
Earth, packed	100	¾ full (approx.)

Transporting the Vehicle

For moving the vehicle long distances, a trailer should be used. Make sure the vehicle is secured to the trailer. Refer to Figures 12 and 13 for location of tie down points.

CAUTION

Loose seats may fall off of the vehicle and trailer when transporting and land on another vehicle or become an obstruction on the road.

Remove the seats or make sure that the seats are securely fastened in the detents.



Figure 12

1. Tie-down points

Towing the Vehicle

In case of emergency, the vehicle can be towed for a short distance. However, Toro does not recommend this as a standard procedure.

WARNING

Towing at excessive speeds could cause a loss of steering control, resulting in personal injury.

Never tow the vehicle faster than 8 kmh.

Towing the vehicle is a two-person job. If the machine must be moved a considerable distance, transport it on a truck or trailer; refer to *Transporting the Vehicle, page 19*

1. Remove the drive belt; refer to *Servicing the Drive Belt*, page 27, steps 1 and 2.
2. Affix a tow line to tongue on front frame member (Fig. 13).
3. Put the vehicle in neutral (see *Neutral Lock Assembly,* page 23) and release the parking brake.



Figure 13

1. Towing tongue and tie-down point

Towing a Trailer

The vehicle is capable of pulling trailers. Two types of tow hitches are available for the vehicle, depending on your application. Contact your authorized Toro distributor for details.

When hauling cargo or towing a trailer, do not overload your vehicle or trailer. Overloading can cause poor performance or damage to the brakes, axle, engine, transaxle, steering, suspension, body structure, or tires. Always load a trailer with 60% of the cargo weight in the front of the trailer. This places approximately 10% of the gross trailer weight on the tow hitch of the vehicle.

The maximum cargo load shall not exceed 567 kg (1250 lbs.), including the gross trailer weight and tongue weight.

To provide adequate braking and traction, always load the cargo box when trailering. Do not exceed the gross trailer weight limits.

Avoid parking a vehicle with a trailer on a hill. If you must park on a hill, engage the parking brake and block the trailer tires.

Maintenance

Note: Determine the left and right sides of the machine from the normal operating position.

Recommended Maintenance Schedule

Maintenance Service Interval	Maintenance Procedure
After First 8 hours	• Check the engine oil. • Check the drive belt tension. • Check the starter belt tension.
Every 8 Hours	• Check the engine oil. • Check the tire pressure.
After First 20 Hours	• Check the front wheel toe-in at the proper ride height.
Every 50 Hours	• Check the battery fluid level. • Check the battery cable connections. • Change the engine oil (includes synthetic oil).[1]
Every 100 Hours	• Lubricate all grease fittings. • Clean the engine rotating screen.[2] • Inspect the air cleaner filter. [2] • Replace the engine oil filter. Inspect the brake and parking brake. • Inspect the condition and wear of the tires. • Torque the wheel lug nuts. • Check the front suspension adjustment toe-in and ride height.
Every 200 Hours	• Replace the air cleaner filter. • Check the brake cable adjustments. • Inspect the drive belt. • Inspect and adjust the starter belt.
Every 400 Hours or Yearly	• Inspect the fuel lines.
Every 800 Hours or Yearly	• Replace the fuel filter. • Change the transaxle oil. • Replace the spark plugs.

[1]More often when operating under heavy load or high temperatures
[2]More often in dusty, dirty conditions

Important Refer to your engine operator's manual for additional maintenance procedures.

Daily Maintenance Checklist

Duplicate this page for routine use.
Note: Check proper section of the operator's manual for fluid specifications.

Maintenance Check Item	Daily Maintenance check for Week of _____						
	Mon	Tues	Wed	Thurs	Fri	Sat	Sun
Brake & Parking Brake Operation							
Gear Shift Operation							
Fuel Level							
Engine Oil Level							
Transaxle Oil Level							
Inspect the Air Filter							
Inspect Engine Cooling Fins							
Unusual Engine Noises							
Unusual Operating Noises							
Tire Pressure							
Fluid Leaks							
Instrument Operation							
Accelerator Operation							
Lubricate All Grease Fittings[1]							
Touch-up Damaged Paint							
[1]= Immediately after **every** washing, regardless of the interval listed.							

Notation for areas of concern:
Inspection performed by:_____

Date	Information

CAUTION

If you leave the key in the ignition switch, someone could accidentally start the engine and seriously injure you or other bystanders.

Remove the key from the ignition and disconnect the wire(s) from the spark plug(s) before you do any maintenance. Set the wire(s) aside so it does not accidentally contact the spark plug(s).

Heavy-Duty Operation

WARNING

The bed must be raised to perform some routine maintenance. The bed could fall and injure persons that are underneath a raised bed.

- Always use prop rod to hold bed up before working under raised bed.
- Remove any load material from the bed before working under raised bed.

Important If the vehicle is subjected to conditions listed below, maintenance should be performed twice as frequently.

- Desert operation
- Cold climate operation (below 0°C)
- Trailer towing
- Frequent operation on dusty roads
- Construction work
- After extended operation in mud, sand, water, or similar dirty conditions, have your brakes inspected and cleaned as soon as possible. This will prevent any abrasive material from causing excessive wear.
- Under frequent heavy-duty operating conditions, lubricate all grease fittings and inspect the air cleaner daily to prevent excessive wear.

Jacking the Vehicle

Whenever the engine is run for routine maintenance and/or engine diagnostics, the rear wheels of the vehicle should be 25mm (1") off the ground with the rear axle supported on jack stands.

DANGER

A vehicle on a jack may be unstable and slip off the jack, injuring anyone beneath it.

- Do not start the engine while the vehicle is on a jack.
- Always remove the key from the ignition before getting off the vehicle.
- Block the tires when the vehicle is on a jack.

The jacking point at the front of the vehicle is on the front of the frame behind the towing tongue (Fig. 14). The jacking point at the rear of the vehicle is under the axle tubes (Fig. 15).



Figure 14

1. Front jacking point

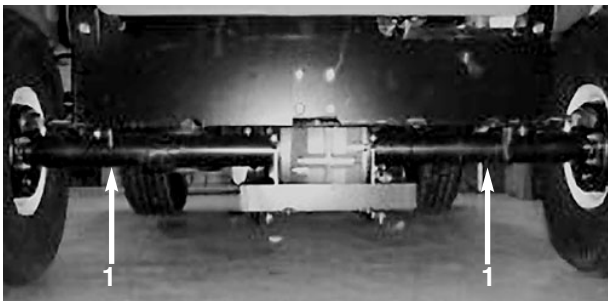

Figure 15

1. Rear jacking points

Neutral Lock Assembly

When performing routine maintenance and/or engine diagnostics, the transaxle must be shifted into a neutral position. The vehicle does not have a neutral position on the shift lever, so the following steps must be performed:

1. To lock the transaxle in neutral, rotate the locking pin 180 degrees on the shift block (Fig. 16).

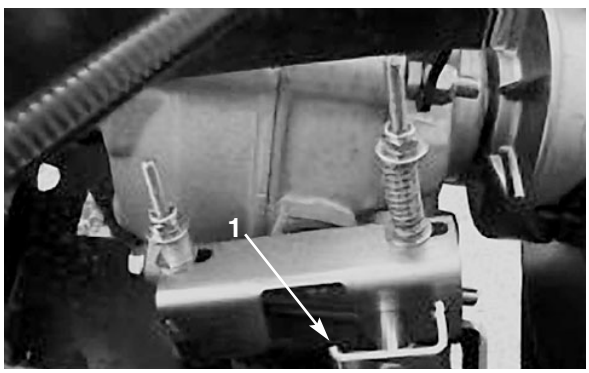

Figure 16

1. Locking pin

2. Shift the gear selector into REVERSE and then into FORWARD. Leave the gear shift selector in the FORWARD position.

3. Ensure that the transaxle is locked in neutral by rotating the secondary clutch (Fig. 17). No tire rotation should occur.

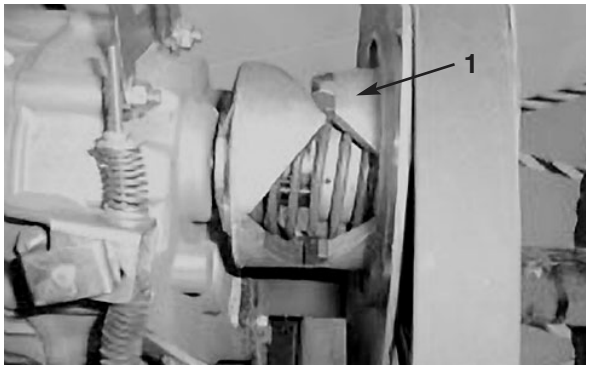

Figure 17

1. Secondary clutch

Servicing the Engine Oil

Service Interval/Specification

Check the oil level before each use.

Change oil:
- After the first 8 operating hours.
- After every 50 operating hours.

Replace the oil filter every 100 hours.

Note: Change oil and oil filter more frequently when operating conditions are extremely dusty or sandy.

Oil Type: Detergent oil (API service SF, SG, SH, SJ,or higher)

Crankcase Capacity: 1.4 liters (48 oz./1-½ qt.) when the filter is changed

Viscosity: See table below

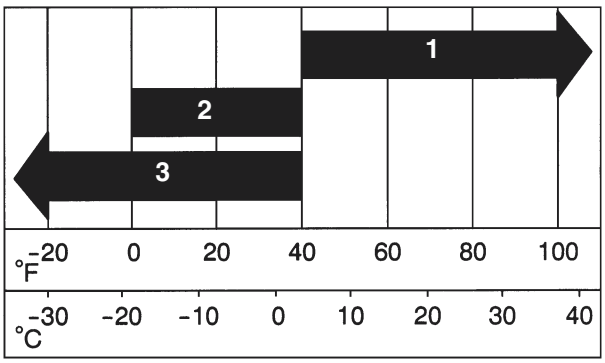

1. SAE 30
2. SW-30, 10W-30
3. Synthetic Sw-20, 5W-30

Checking the Oil Level

To check the oil level, refer to *Checking the Crankcase Oil*, page 13.

Changing and Draining the Oil

1. Start the vehicle and let it run for a few minutes to warm the oil.
2. Park the machine on a level surface, set the parking brake, turn the ignition off, and remove the key.
3. Raise the bed and secure it with the prop rod.
4. Disconnect the spark plug wires and battery cables.
5. Remove the drain plug (Fig. 18) and let the oil flow into a drain pan. When the oil stops, install the drain plug.

   Note: Dispose of the used oil at a certified recycling center.

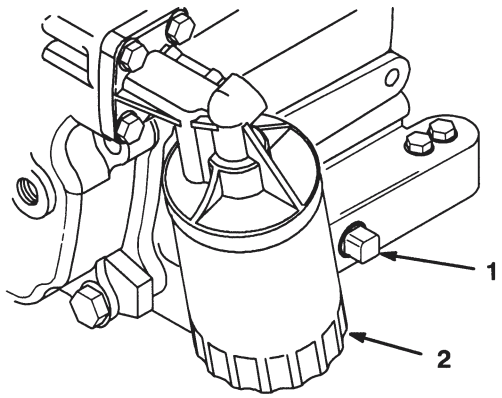

Figure 18

1. Engine oil drain plug
2. Engine oil filter

6. Pour oil into the fill opening until the oil level is up to the *Full* mark on the dipstick. Add the oil slowly and check the level often during this process. Do not overfill.
7. Install the oil fill cap and dipstick firmly in place.

Changing the Oil Filter

Replace the oil filter every 100 operating hours or yearly, whichever occurs first.

1. Drain the oil from the engine; refer to *Changing and Draining the Oil*, page 24.
2. Remove the existing oil filter (Fig. 27). Apply a light coat of clean oil to the new filter gasket.
3. Screw the new filter on until the gasket contacts the mounting plate, then tighten the filter an additional ½- to ¾-turn further. ***Do not overtighten***.
4. Fill the crankcase with the proper type of new oil; refer to *Engine Oil*, page 23.
5. Start and run the engine to check for leaks.
6. Stop the engine and check the oil level. Add oil if necessary.

Cleaning the Engine Cooling Areas

Clean the rotating screen, cooling fins, and external surfaces of the engine every 100 hours of operation or more often under extremely dusty and dirty conditions.

Important Operating the engine with a blocked rotating screen, dirty or plugged cooling fins, or cooling shrouds removed, will cause engine damage due to overheating.

Important Never clean the engine with pressurized water because water could contaminate the fuel system.

Servicing the Air Cleaner

Service Interval/Specification

Check the air cleaner body for damage that could possibly cause an air leak. Replace a damaged air cleaner body.

Ensure the cover is sealing around the air cleaner body.

Air Cleaner Filter: Inspect after every 100 operating hours; replace after every 200 hours or sooner if dirty or damaged.

Note: Service the air cleaner more frequently (every few hours) if operating are extremely dusty or sandy.

Removing the Filter Element

1. Park the machine on a level surface and turn the engine off.

2. Raise the bed and secure it with a prop rod.

3. Release the latches securing the air cleaner cover to the air cleaner body. Separate the cover from the body. Clean the inside of the air cleaner cover (Fig. 19).

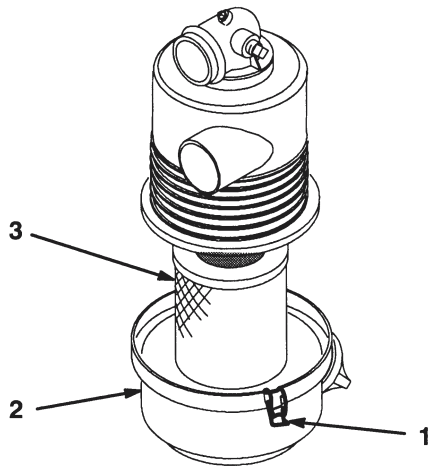

Figure 19

1. Air cleaner latches
2. Cover
3. Filter

4. Gently slide the filter out of the air cleaner body to reduce the amount of dust dislodged (Fig. 19). Avoid knocking the filter against the air cleaner body.

5. Inspect the filter and discard if damaged.

Cleaning the Filter Element

Important Do not wash or reuse a damaged filter.

1. Washing method:

A. Prepare a solution of filter cleaner and water and soak the filter element about 15 minutes. Refer to directions of the filter cleaner carton for complete information.

B. After soaking the filter for 15 minutes, rinse it with clear water. Rinse the filter from clean side to dirty side.

Important To prevent damage to the filter element, maximum water pressure must not exceed 276 kPa (40 psi).

C. Dry the filter element using warm, flowing air (71°C, 160°F max.), or allow element to air dry.

Important Do not use a light bulb to dry the filter element because damage could result.

2. Compressed air method:

A. Blow compressed air from inside to the outside of dry filter element. Keep the air hose nozzle at least 5cm (2 inches) from the filter and move the nozzle up and down while rotating the filter element.

Important To prevent damage to the filter element, do not exceed 689 kPa (100 psi) air pressure.

B. Inspect for holes and tears by looking through the filter toward a bright light.

Installing the Filter Element

Important To prevent engine damage, always operate the engine with the complete air cleaner assembly installed.

1. Inspect new filter for shipping damage. Check the sealing end of the filter.

Important Do not install a damaged filter.

2. Insert the new filter properly into the air cleaner body. Ensure the filter is sealed properly by applying pressure to outer rim of the filter when installing. Do not press on the flexible center of the filter.

3. Reinstall the cover and secure the latches.

Greasing the Machine

Service Interval/Specification

Lubricate all bearings and bushings after every 100 hours or once a year, whichever occurs first. Grease them more frequently when using for heavy-duty vehicle operations.

Grease Type: No. 2 General Purpose Lithium Base Grease

Where to Add Grease

The grease fitting locations and quantities are: tie rod ends (4) (Fig. 20), king pins (2) (Fig. 21), and throttle and brake pedal pivots (2) (Fig. 22).

1. Wipe grease fitting clean so foreign matter cannot be forced into the bearing or bushing.

2. Pump grease into the bearing or bushing.

3. Wipe off excess grease.

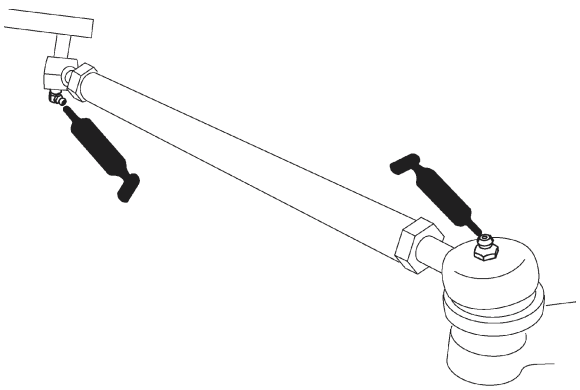

Figure 20

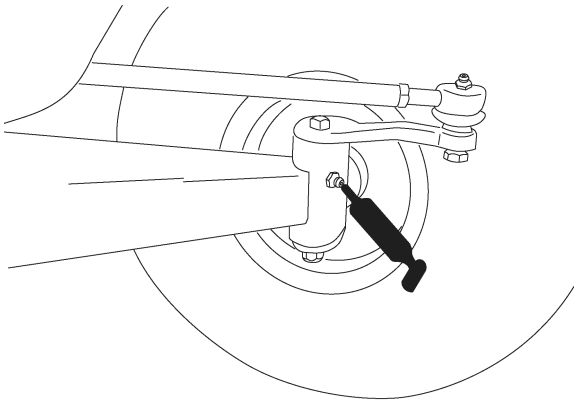

Figure 21

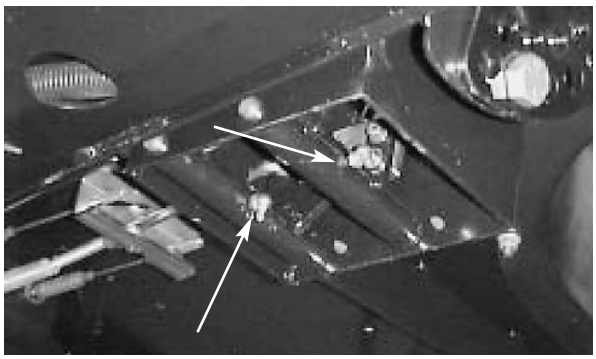

Figure 22

Servicing the Brakes

Inspecting Brakes

Brakes are a critical safety component of the vehicle. As with all safety components, they should be closely inspected at regular intervals to ensure optimum performance and safety. The following inspections should be done every 100 hours:

- Inspect the brake shoes for wear or damage. If the lining (brake pad) thickness is less than 1/16 in. (1.6 mm), the brake shoes should be replaced.
- Inspect the backing plate and other components for signs of excessive wear or deformation. If any deformation is found, the appropriate components must be replaced.

Adjusting the Brake Pedal

Adjust the brake if the parking brake does not hold, brake pedal travel is excessive, or braking power is not sufficient when the brake pedal is depressed. Check adjustment every 200 hours.

1. Turn the ignition to OFF and remove the key.

2. Raise the vehicle off the ground; see *Jacking the Vehicle* page 22.

3. Tighten the cable adjusting screw, located beneath the floor panel, until the cables are snug in the brake equalizer (Fig. 23).

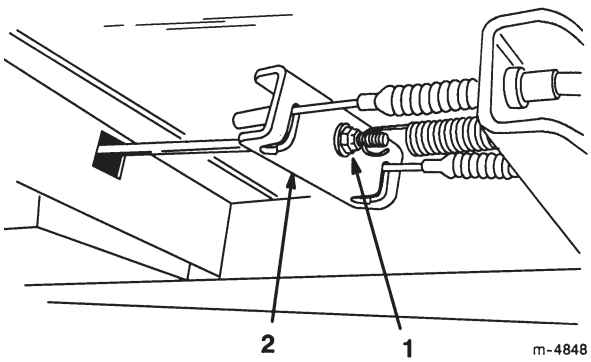

Figure 23

1. Cable adjusting screw
2. Brake equalizer

Inspecting Tires

Check tire condition at least every 100 hours of operation. Operating accidents, such as hitting curbs, can damage a tire or rim and also disrupt wheel alignment, so inspect tire condition after an accident.

Check the wheels to ensure that they are mounted securely. Torque the front bolts to 183–224 N•m (135 –165 ft.-lbs.) and the rear lug nuts to 61–88 N•m (45–65 ft.-lbs.).

Adjusting the Front Suspension

The ride height of each side of the vehicle can be adjusted.

1. Jack the front end of the vehicle off the ground; refer to *Jacking the Vehicle,* page 22.

2. Remove the travel limiting bolt (Fig. 24).

3. Loosen the centering bolts in the front "A" frame (Fig. 24).

4. Remove the ride height adjustment bolt (Fig. 24).

5. Rotate the front "A" frame to desired position (Fig. 24). The distance from the bottom side of the front hitch to the ground should be 9 to 9-¾ in. (22.9 to 24.8 cm) with the tires inflated to 12 psi (83 kPa).

6. Replace the ride height adjustment bolt and the travel limiting bolt (Fig. 24).

7. Tighten and torque the centering bolts to 359 ±34 N•m (265 ±25 ft-lbs.).

8. Tighten and torque the ride height adjustment bolt to 203 ±20 N•m (150 ±15 ft-lbs.).

9. Repeat procedure on opposite side of the vehicle.

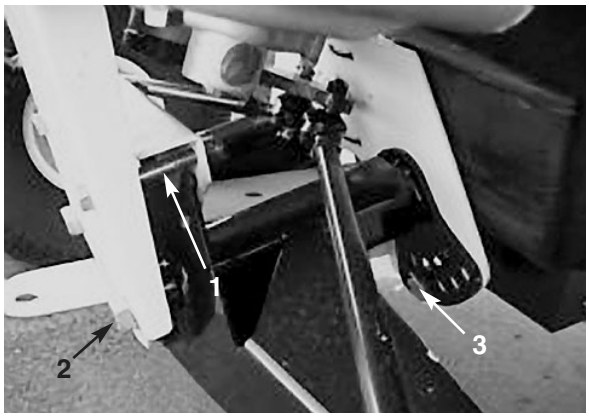

Figure 24

1. Travel limiting bolt
2. Centering bolt
3. Ride height adjustment bolt

Servicing the Drive Belt

Service Interval/Specification

Check condition and tension of drive belt after first day of operation and every 200 operating hours thereafter.

1. Park the machine on a level surface, set the parking brake, and turn the engine off.

2. Raise the bed and secure it with a prop rod.

3. Put the vehicle in neutral; refer to *Neutral Lock*

Assembly, page 23.

4. Rotate and inspect the belt for excessive wear or damage. Replace as necessary.

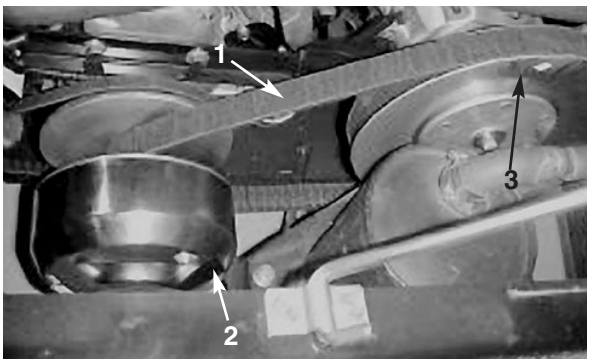

Figure 25

1. Drive belt
2. Primary clutch
3. Secondary clutch

Replacing the Drive Belt

1. Rotate and route the belt over the secondary clutch (Fig. 25).

2. Remove the belt from the primary clutch (Fig. 25).

3. To replace the belt, reverse the procedure.

Adjusting the Starter Generator Belt

Check the tension of the starter generator belt after the first day of operation and every 200 operating hours thereafter.

1. Park the machine on a level surface, set the parking brake, turn the ignition off, and remove the key.

2. Loosen the starter generator pivot bolt (Fig. 26).

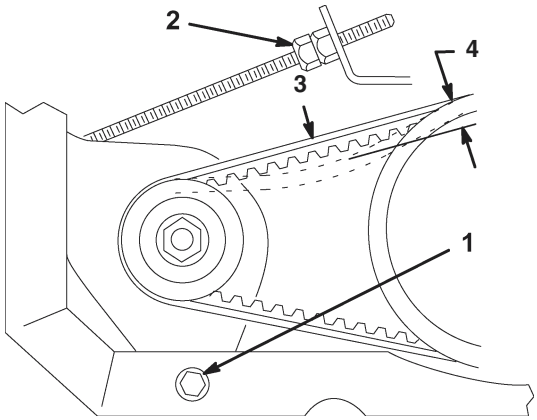

Figure 26

1. Generator pivot bolt
2. Jam nut
3. 14 N•m
4. 6mm (1⁄4 in.)

3. Adjust the jam nut on the starter rod (Fig. 26) until the belt flexes 6mm (¼ in.) with 14 N•m (10 lbs..) of force.

4. Tighten the starter generator pivot bolt (Fig. 26).

Adjusting Front Wheel Toe-in

Check the front wheel toe-in after every 100 operating hours or annually, whichever occurs first.

1. Ensure that the distance from the bottom of the tongue to the ground is 22.9 to 24.8 cm (9 to 9-¾ in.) when the tires are inflated to 83 kPa (12 psi). Adjust if necessary; refer to *Adjusting the Front Suspension*, page 27.

2. Measure the distance between both of the front tires at axle height (at the front and rear of the wheels) (Fig. 27). The front measurement must be equal to the rear measurement ± ¼ in. (6.4 mm).

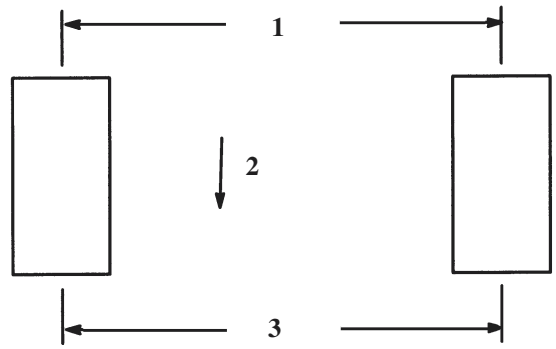

Figure 27

1. Center-to-center distance (rear of tires)
2. Forward
3. Center-to-center distance (front of tires)

3. If the measurement is greater than ¼ in. (6.4 mm), loosen the jam nuts at both ends of the tie rods (Fig. 28).

4. Rotate both tie rods to move the front of the tire inward or outward.

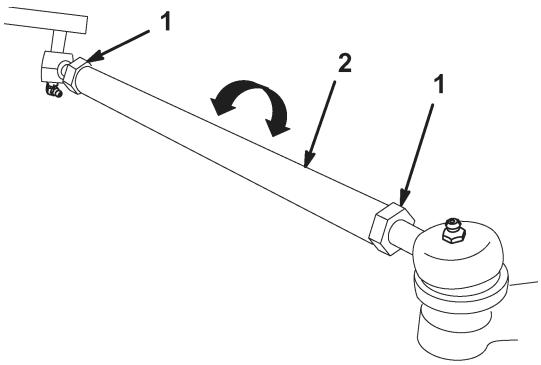

Figure 28

1. Jam nut
2. Tie rod8

5. Tighten tie rod jam nuts when the adjustment is correct.

6. Ensure that there is full travel of the steering wheel in both directions.

Servicing the Fuel System

Fuel Lines and Connections

Check lines and connections every 400 hours or yearly, whichever occurs first. Inspect for deterioration, damage, or loose connections.

Replacing the Fuel Filter

Replace the fuel filter after every 800 operating hours or yearly, whichever occurs first.

1. Raise the bed and support it with the prop rod.

2. Place a clean container under the fuel filter.

3. Remove the clamps securing the fuel filter to the fuel lines.

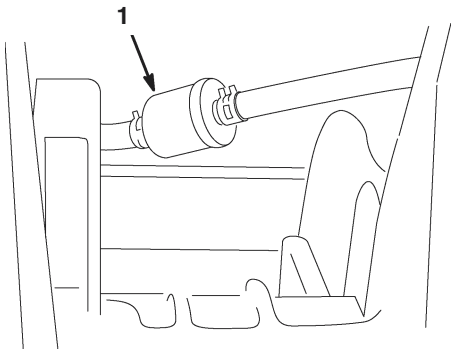

Figure 29

1. Fuel filter

4. Install the new fuel filter to the fuel lines with the clamps previously removed. The filter to be mounted so arrow points toward the carburetor.

Spark Plugs

Service Interval/Specification

Replace spark plugs after every 800 operating hours or yearly, whichever occurs first, to assure proper engine performance and reduce exhaust emission level.

Type: Champion RC 12YC (or equivalent)
Air Gap: 0.76 mm (0.03”)

Note: The spark plug usually lasts a long time; however, the plug should be removed and checked whenever the engine malfunctions.

Replacing the Spark Plug

1. Clean the area around the spark plugs so foreign matter cannot fall into the cylinder when the spark plug is removed.

2. Pull the spark plug wires off the spark plugs and remove the plugs from the cylinder head.

3. Check the condition of the side electrode, center electrode, and center electrode insulator to assure there is no damage.

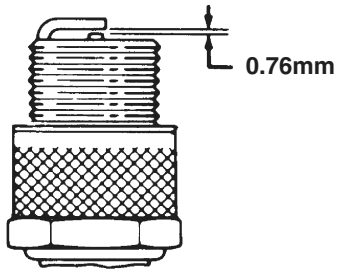

Figure 30

1. 0.76mm (0.03")

Important A cracked, fouled, dirty or otherwise malfunctioning spark plug must be replaced. Do not sand blast, scrape, or clean electrodes by using a wire brush because grit may eventually release from the plug and fall into the cylinder. The result is usually a damaged engine.

4. Set the air gap between center and side of electrodes at 0.76mm (0.03"). Install a correctly gapped spark plug and tighten the plug to 24–30 Nm (18–22 ft-lbs..). If a torque wrench is not used, tighten the plug firmly.

5. Install the spark plug wires.

Changing Transaxle Fluid

Change transaxle fluid every 800 operating hours or yearly, whichever occurs first.

1. Position the vehicle on a level surface, stop the engine, engage the parking brake and remove the key from the ignition switch.

2. Remove drain plug from right side of reservoir (Fig. 31) and let fluid flow into drain pan. Reinstall and tighten the plug when fluid stops draining.

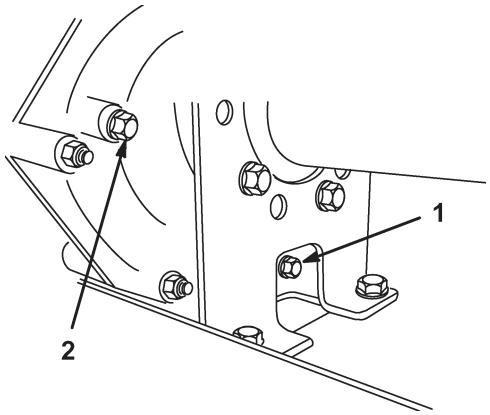

Figure 31

1. Drain plug

3. Fill the reservoir (Fig 32) with approximately 1.4 liters (1-½ qt.) of 10W30 motor oil or until the oil level is at the bottom of the level indicator hole (Fig. 32).

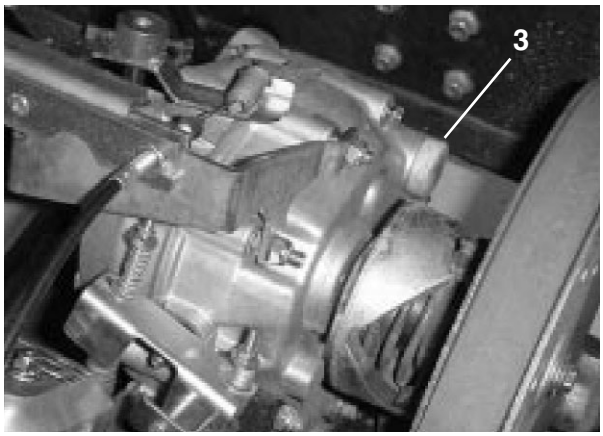

Figure 32

1. Oil fill

4. Start the engine and operate to fill system. Recheck the oil level and replenish, if required.

Fuses

There are three fuses in the machine's electrical system. They are located beneath the bed in a box on the right hand side of the frame (Fig. 33).

Fuses: Ignition System—10 amp.
Lights—10 amp.
Power Point—10 amp. (15 amp. max.)

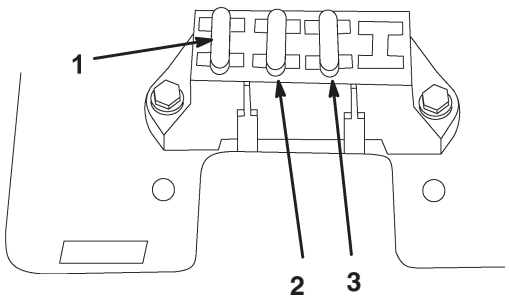

Figure 33

1. Ignition system
2. Lights
3. Power point
4. Open

Replacing the Headlights

Specification: GE Headlight # H7610

1. Set the parking brake, turn the ignition off, and remove the key.

2. Reach beneath the dash and push the headlight out of the hood.

3. Remove the screws attaching the wire harness to the headlight.

4. Remove the rubber seal from around the headlight (Fig. 34). Discard the headlight.

5. Align the notch on the inside of the seal with the notch on the new headlight (Fig. 34). Slide the seal onto the headlight until the seal is firmly in place.

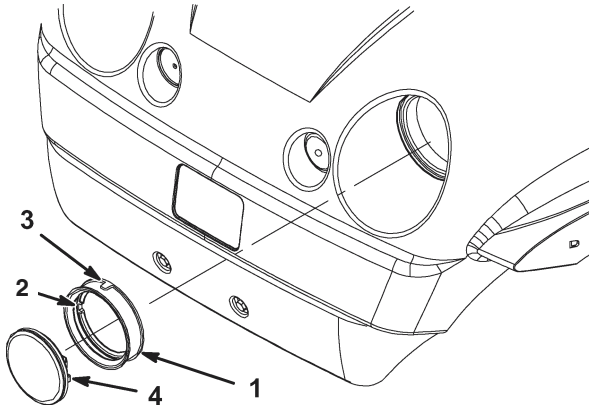

Figure 34

1. Rubber seal
2. Inside notch—align with notch on headlight
3. Outside notch align with notch in hood
4. Headlight

6. Attach the headlight to the wire harness using the previously removed screws.

7. Align the notch on the outside of the seal with the notch in the hood. Push the headlight and seal into the hood until it is firmly in place.

Note: Applying soapy water to the outside of the seal may aid in sliding the seal into the hood.

Servicing the Battery

WARNING

Battery posts, terminals, and related accessories contain lead and lead compounds, chemicals known to the State of California to cause cancer and reproductive harm. *Wash hands after handling.*

Important **Do not jump start the vehicle.**

Service Interval/Specification

Always keep the battery clean and fully charged. Use a paper towel to clean the battery and battery box. If the battery terminals are corroded, clean them with a solution of four parts water and one part baking soda. Apply a light coating of grease to the battery terminals to prevent corrosion.

Voltage: 12 volts with 280 cold-cranking Amps @ –17.8°C (0°F).

Removing the Battery

1. Position the vehicle on a level surface, set the parking brake, turn the ignition off and remove the key.

2. Raise the bed and secure it with the prop rod.

3. Unhook the battery strap.

4. Disconnect the negative (black) ground cable from the battery post.

5. Disconnect the positive (red) cable from the battery post.

WARNING

Incorrect battery cable routing could damage the vehicle and cables causing sparks. Sparks can cause the battery gasses to explode, resulting in personal injury.

- Always disconnect the negative (black) battery cable before disconnecting the positive (red) cable.
- Always reconnect the positive (red) battery cable before reconnecting the negative (black) cable.

WARNING

Battery terminals or metal tools could short against metal vehicle components causing sparks. Sparks can cause the battery gasses to explode, resulting in personal injury.

- When removing or installing the battery, do not allow the battery terminals to touch any metal parts of the vehicle.
- Do not allow metal tools to short between the battery terminals and metal parts of the vehicle.
- Always keep the battery strap in place to protect and secure the battery.

6. Remove the battery from the chassis.

Installing the Battery

1. Set the battery on the battery base so the battery posts are toward the rear of the vehicle.

2. Connect the positive (red) cable to the positive (+) battery post and the negative (black) cable to the negative (–) battery post using the bolts and wing nuts. Slide the rubber boot over the positive battery post.

3. Replace the rubber strap to secure the battery to the base.

Important **Always keep the battery strap in place to protect and secure the battery.**

Checking Electrolyte Level

Check the electrolyte level every 50 operating hours or, if the machine is in storage, every 30 days.

1. Raise the bed and secure with the prop rod.

2. Remove the filler caps. If the electrolyte is not up to the fill line, add the required amount of distilled water; refer to *Adding Water to the Battery,* page 32.

Adding Water to the Battery

The best time to add distilled water to the battery is just before you operate the machine. This lets the water mix thoroughly with the electrolyte solution.

1. Clean the top of the battery with a paper towel.

2. Remove the filler caps from the battery and slowly fill each cell with distilled water until the level is up to the fill line. Replace the filler caps.

Important Do not overfill the battery. Electrolyte will overflow onto other parts of the vehicle and severe corrosion and deterioration will result.

Charging the Battery

Important Always keep the battery fully charged (1.260 specific gravity). This is especially important to prevent battery damage when the temperature is below 0°C (32°F).

1. Remove the battery from the chassis; refer to *Removing the Battery,* page *32.*

2. Connect a 3- to 4-amp battery charger to the battery posts. Charge the battery at a rate of 3 to 4 amperes for 4 to 8 hours (12 volts). Do not overcharge the battery.

3. Install the battery in the chassis; refer to *Installing the Battery*, page 32.

WARNING

Charging the battery produces gasses that can explode.

Never smoke near the battery and keep sparks and flames away from the battery.

Storing the Battery

If the machine will be stored for more than 30 days, remove the battery and charge it fully. Either store it on the shelf or on the machine. Leave the cables disconnected if it is stored on the machine. Store the battery in a cool atmosphere to avoid quick deterioration of the charge in the battery. To prevent the battery from freezing, make sure it is fully charged.

Washing the Vehicle

The vehicle should be washed as needed. Use water alone or with a mild detergent. A rag may be used, however, the hood will loose some of its luster.

Important Pressurized water is not recommended when washing the machine. It may damage the electrical system, loosen important decals, or wash away necessary grease at friction points. Avoid excessive use of water, especially near the control panel, engine, and battery.