Form No. 3326-120

56 Inch Snow Blade

TimeCutter™ Z Riding Mower Attachment

Model No. 79165—220000001 and Up

Parts Catalog

Ordering Replacement Parts

To order replacement parts, please supply: the part number, the quantity, and the description of each part desired.

Understanding Reference Numbers

Each identified part in an illustration has a reference number. The reference number for a part also appears in the parts list, along with other information about the part.

This catalog uses two special reference number formats, one to indicate parts in a service assembly and another to indicate the quantity of a given part in an illustration.

Service Assembly Reference Numbers

Parts in service assemblies have reference numbers in the form **a:b.** The **a** represents the reference number of the entire service assembly and the **b** represents a sequential number unique to each part within the service assembly.

For example, a wheel assembly might be identified by reference number **6**, the tire by **6:1**, the valve by **6:2**, and the wheel by **6:3**. When you order the assembly identified by reference number 6, you receive all parts identified by reference numbers 6:1, 6:2, and 6:3. However, you may also order any part individually.

Reference numbers of this type appear in illustrations and in part lists.

Reference Numbers Indicating Quantity

In an illustration, if a reference number indicates more than one part, the reference number has the form **nX y.** The **n** represents the quantity of the part, the **X** is the multiplication symbol, and the **y** represents the reference number.

For example, in an illustration, the reference number **2X 37** means that two of the parts identified by reference number 37 are indicated.

© The TORO Company — 2001
All Rights Reserved

Contents

Description	Page
Frame Assembly	3
Lift Assembly	4
Blade Assembly	5

Description	Page

Part Description Abbreviations

Part descriptions in this catalog may include the following abbreviations.

Abbreviation	Meaning
AR	as required
ASM	assembly
CARR	carriage
DEG	degrees
FH	flat head
GA	gauge
HF	hex flange
HH	hex head
HHF	hex head flange
HLH	hex lag head
HJ	hex jam
HOC	height-of-cut
HS	hex socket
HSBH	hex socket button head
HSFH	hex socket flat head
HSH	hex socket head
HWH	hex washer head
HWHTF	hex washer head thread forming

Abbreviation	Meaning
HYD	hydraulic
INC	incorporated
LH	left hand
NI	nylon insert
PPH	Phillips pan head
PTH	Phillips truss head
PTO	power take off
RH	right hand
SFH	slotted fillister head
SHH	slotted hex head
SQH	square head
SHWH	slotted hex washer head
SPH	slotted pan head
SRH	slotted round head
STD	standard
TAP	self tapping
TTH	Torx truss head
WH	wing head

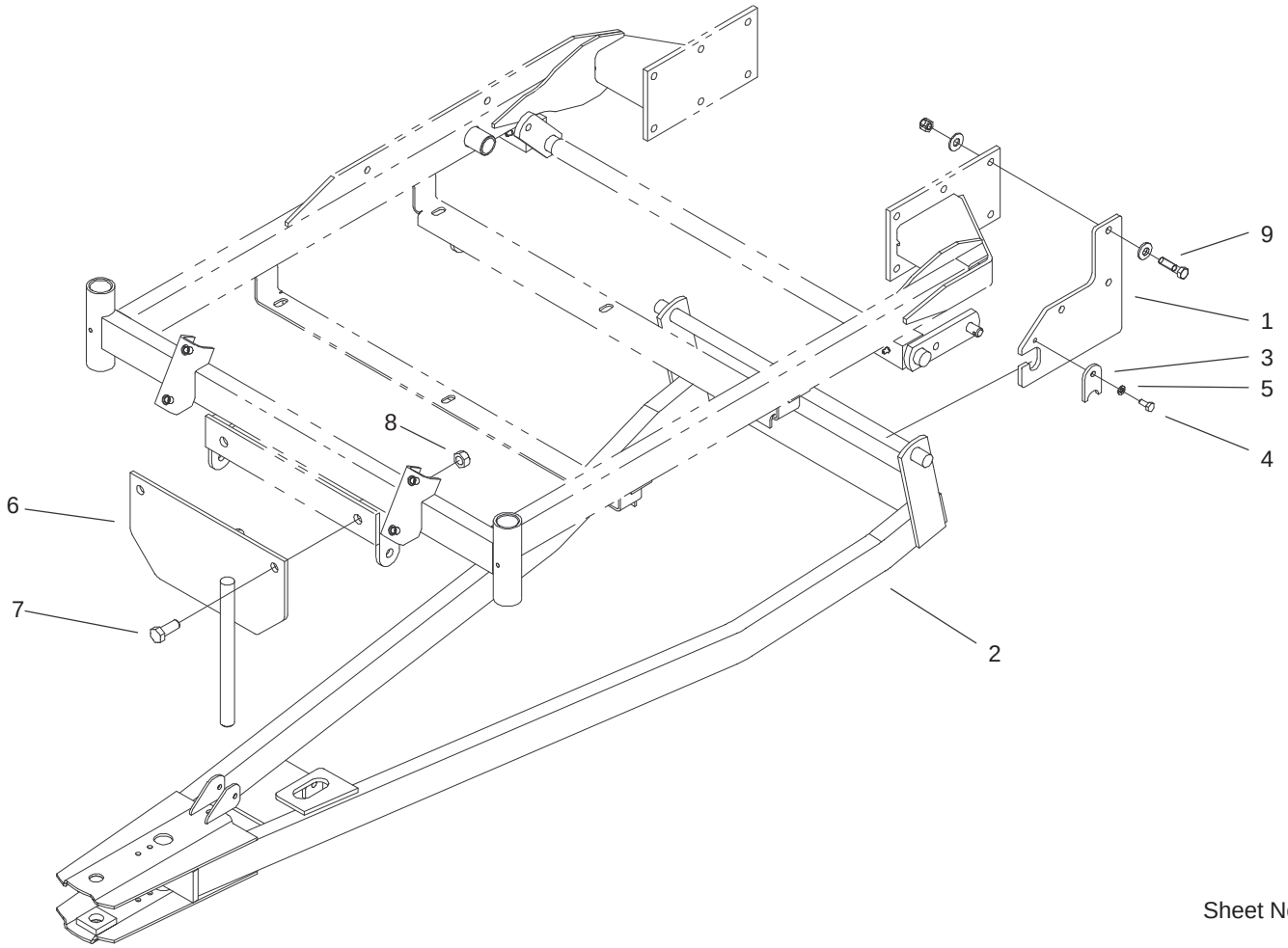

Sheet No.:2

Frame Assembly

Ref. No.	Part No.	Qty.	Description
1	105–1900–01	2	Plate–Support
2	105–1902–01	1	Frame–Blade
3	104–8090–01	2	Plate–Retainer
4	321–3	2	Screw–HH
5	3253–3	2	Washer–Lock
6	105–3427–01	1	Plate–Pulley
7	325–5	2	Screw–HH
8	3296–19	2	Nut–Lock NI
9	323–8	6	Screw–HH

Ref. No.	Part No.	Qty.	Description

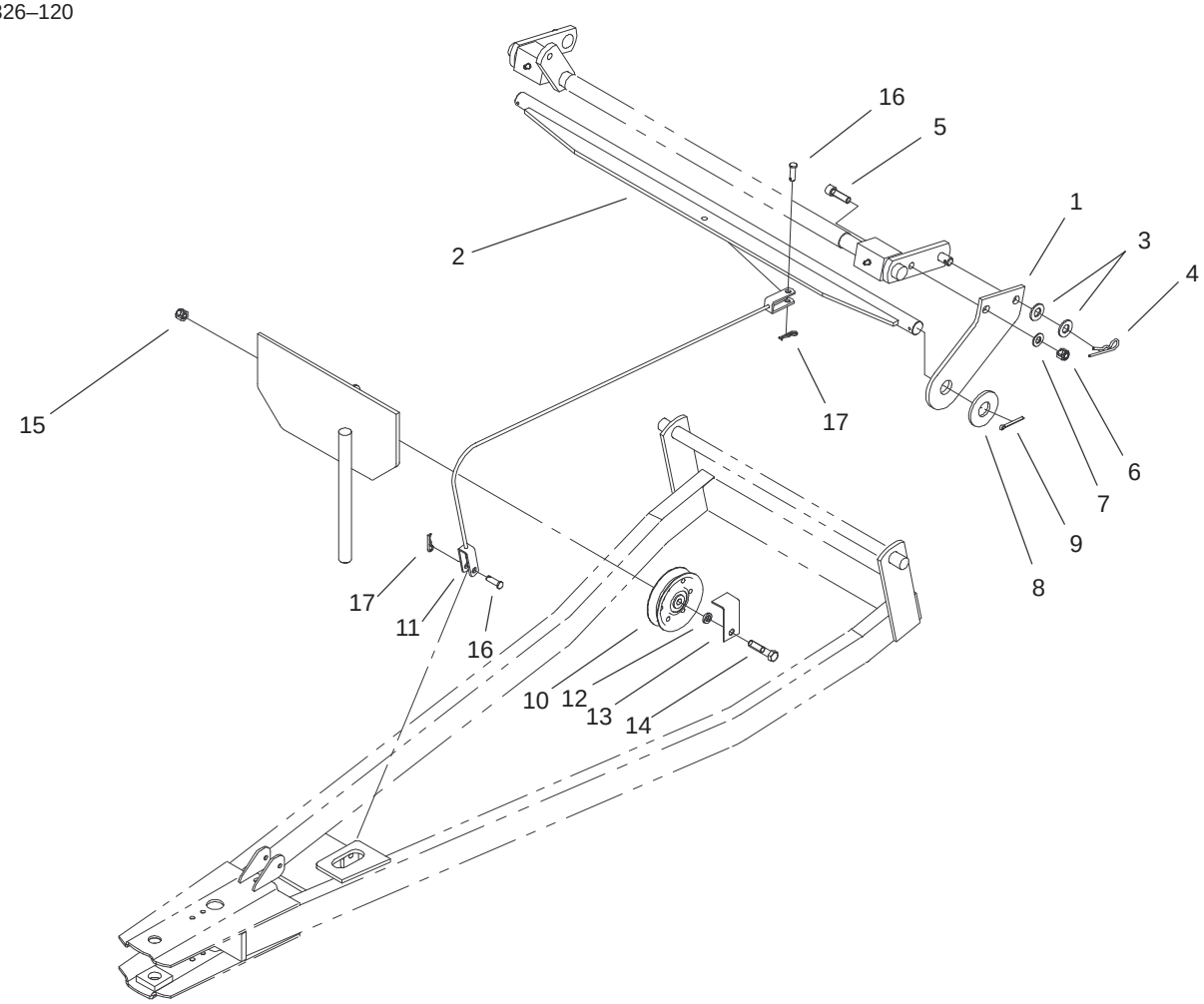

Sheet No.:3

Lift Assembly

Ref. No.	Part No.	Qty.	Description
1	105–1914–01	2	Arm–Lift
2	105–3420	1	Shaft–Lift
3	3256–26	4	Washer–Flat
4	1–806005	2	Pin–Cotter, Hair
5	3274–1	2	Screw–HSH
6	3296–39	2	Nut–Lock, NI
7	3256–24	2	Washer–Flat
8	3256–9	2	Washer–Flat
9	3272–18	2	Pin–Cotter
10	92–7101	1	Pulley–Flat Idler
11	105–3431	1	Cable–Lift
12	104662	1	Spacer
13	105–3411–01	1	Guide–Cable
14	323–9	1	Screw–HH
15	3296–39	1	Nut–Lock, NI
16	1–808280	2	Pin–Clevis
17	1–806003	2	Pin–Cotter, Hair

Ref. No.	Part No.	Qty.	Description

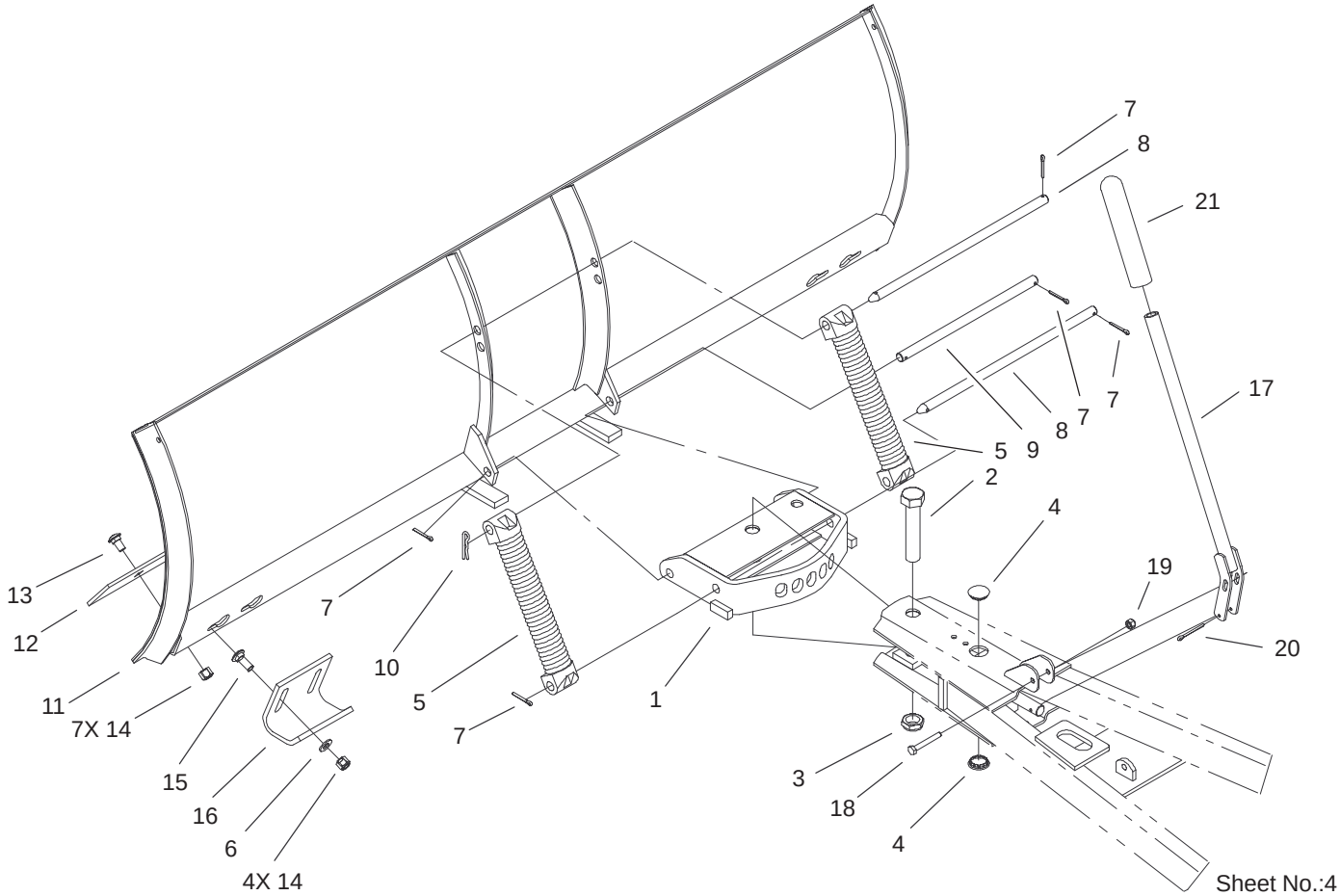

Blade Assembly

Ref. No.	Part No.	Qty.	Description
1	104–8053–01	1	Quadrant
2	3216–7	1	Screw–HH
3	9156404	1	Nut–Lock
4	4944	2	Plug
5	105–1386–03	2	Lug/Spring ASM
6	3256–24	4	Washer–Flat
7	3272–11	5	Pin–Cotter
8	5120	2	Rod–Blade Pivot
9	4564	1	Rod–Lower Plated
10	9335124	1	Pin–Hair
11	116780–01	1	Blade–56 Inch
12	103618–01	1	Plate–Blade Edge
13	3231–1	7	Screw–CARR
14	3296–39	11	Nut–Lock, NI
15	3231–2	4	Screw–CARR
16	117424–03	2	Skid
17	99–7787–01	1	Lever–Index
18	321–11	1	Screw–HH
19	3296–42	1	Nut–Lock, NI
20	3272–13	1	Pin–Cotter
21	105–1904	1	Grip–Snow Blade Handle

Ref. No.	Part No.	Qty.	Description

Maintenance Record

Date								

Maintenance Record

Date								

TORO®