Form No. 3445-938 Rev A

TORO®

Count on it.

Operator's Manual

Groundsmaster® 7200 Series Traction Unit

Model No. 30495—Serial No. 407200000 and Up
Model No. 30495TC—Serial No. 407800000 and Up

Register at www.Toro.com.
Original Instructions (EN)

CE

3445-938

This product complies with all relevant European directives; for details, please see the separate product-specific Declaration of Conformity (DOC) sheet.

It is a violation of California Public Resource Code Section 4442 or 4443 to use or operate the engine on any forest-covered, brush-covered, or grass-covered land unless the engine is equipped with a spark arrester, as defined in Section 4442, maintained in effective working order or the engine is constructed, equipped, and maintained for the prevention of fire.

The enclosed engine owner's manual is supplied for information regarding the US Environmental Protection Agency (EPA) and the California Emission Control Regulation of emission systems, maintenance, and warranty. Replacements may be ordered through the engine manufacturer.

⚠ WARNING

CALIFORNIA
Proposition 65 Warning

Diesel engine exhaust and some of its constituents are known to the State of California to cause cancer, birth defects, and other reproductive harm.

Battery posts, terminals, and related accessories contain lead and lead compounds, chemicals known to the State of California to cause cancer and reproductive harm. Wash hands after handling.

Use of this product may cause exposure to chemicals known to the State of California to cause cancer, birth defects, or other reproductive harm.

Introduction

This machine is a ride-on, rotary-blade lawn mower intended to be used by professional, hired operators in commercial applications. It is primarily designed for cutting grass on well-maintained lawns in parks, sports fields, and on commercial grounds. It is not designed for cutting brush, mowing grass and other growth alongside highways, or for agricultural uses. Using this product for purposes other than its intended use could prove dangerous to you and bystanders.

Read this information carefully to learn how to operate and maintain your product properly and to avoid injury and product damage. You are responsible for operating the product properly and safely.

Visit www.Toro.com for product safety and operation training materials, accessory information, help finding a dealer, or to register your product.

Whenever you need service, genuine Toro parts, or additional information, contact an Authorized Service Dealer or Toro Customer Service and have the model and serial numbers of your product ready. Figure 1 identifies the location of the model and serial numbers on the product. Write the numbers in the space provided.

Important: **With your mobile device, you can scan the QR code on the serial number decal (if equipped) to access warranty, parts, and other product information.**

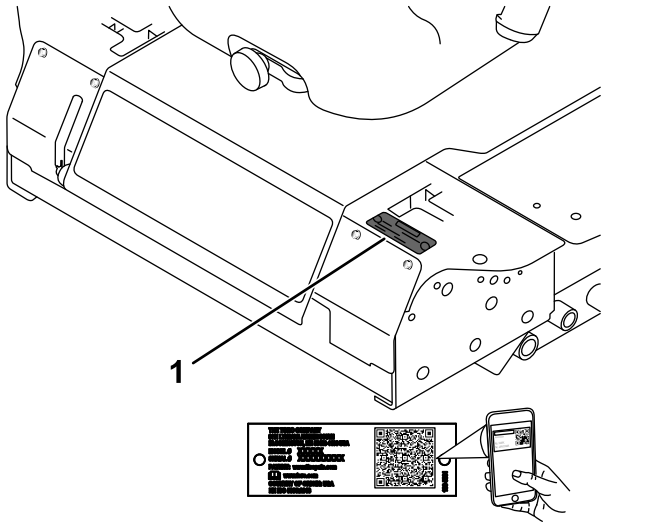

g241316

Figure 1

1. Model and serial number location

Model No. _____

Serial No. _____

© 2021—The Toro® Company
8111 Lyndale Avenue South
Bloomington, MN 55420

Contact us at www.Toro.com.
Printed in the USA
All Rights Reserved

This manual identifies potential hazards and has safety messages identified by the safety-alert symbol (Figure 2), which signals a hazard that may cause serious injury or death if you do not follow the recommended precautions.



g000502

Figure 2

1. Safety-alert symbol

This manual also uses 2 words to highlight information. **Important** calls attention to special mechanical information and **Note** emphasizes general information worthy of special attention.

Contents

Safety 5
General Safety 5
Safety and Instructional Decals 5
Setup 13
1 Raising the Roll Bar 13
2 Installing the Cutting Unit 13
3 Adjusting the Left, Front Caster Wheel 13
4 Checking the Tire Pressure 14
5 Installing Weights (for CE Compliance) 15
6 Checking the Fluid Levels 16
7 Installing the Decal (CE Machines Only) 16
Product Overview 16
Controls 16
Specifications 19
Attachments/Accessories 20
Before Operation 20
Before Operation Safety 20
Adding Fuel 21
Checking the Engine-Oil Level 22
Checking the Cooling System 22
Checking the Hydraulic System 22
Adjusting the Roll Bar 22
Using the Safety-Interlock System 23
Positioning the Seat 24
Changing the Seat Suspension 25
Unlatching the Seat 25
During Operation 25
During Operation Safety 25
Operating the Parking Brake 27
Starting the Engine 27
Driving the Machine 28
Shutting Off the Engine 29
Operating the Mower 29
Adjusting the Height of Cut 30
Operating Tips 30
After Operation 31
General Safety 31
Pushing the Machine 31
Hauling the Machine 32
Loading the Machine 33
Maintenance 34
Maintenance Safety 34
Recommended Maintenance Schedule(s) 34
Daily Maintenance Checklist 36
Lubrication 37
Greasing the Bearings and Bushings 37
Servicing the Cutting-Unit Gearbox Lubricant 37
Engine Maintenance 38
Engine Safety 38
Checking the Air Cleaner 38
Servicing the Air Cleaner 39
Servicing the Engine-Oil 39
Fuel System Maintenance 41
Servicing the Water Separator 41
Draining the Fuel Tank 41
Inspecting the Fuel Lines and Connections 42
Bleeding the Fuel System 42
Bleeding Air from the Injectors 42
Electrical System Maintenance 43
Electrical System Safety 43
Servicing the Battery 43
Storing the Battery 43
Checking the Fuses 43
Drive System Maintenance 44
Checking the Tire Pressure 44
Replacing the Caster Wheels and Bearings 45
Cooling System Maintenance 46
Cooling System Safety 46
Coolant Specification 46
Checking the Cooling System 46
Cleaning the Radiator 47
Brake Maintenance 47
Adjusting the Parking-Brake Interlock Switch 47
Belt Maintenance 48
Checking the Alternator-Belt Tension 48
Controls System Maintenance 49
Adjusting the Control-Lever Neutral-Interlock Switch 49
Adjusting the Control-Lever Neutral Return 49
Adjusting the Traction Drive for Neutral 51
Adjusting the Maximum Ground Speed 52
Adjusting the Tracking 53
Hydraulic System Maintenance 54
Hydraulic System Safety 54
Hydraulic Fluid Capacity 54
Hydraulic Fluid Specification 54
Checking the Hydraulic System 54

Changing the Hydraulic Fluid And Filter 55
Cleaning 55
Cleaning Under the Cutting Unit 55
Waste Disposal 55
Storage 56
Storage Safety 56
Preparing the Machine for Storage 56
Preparing the Engine 57

Safety

This machine has been designed in accordance with CEN standard ANSI B71.4-2017 and ISO EN 5395 when you install the proper CE Kits and complete the setup procedures.

General Safety

This product is capable of amputating hands and feet and of throwing objects. Always follow all safety instructions to avoid serious personal injury.

- Read and understand the contents of this *Operator's Manual* before starting the engine.
- Use your full attention while operating the machine. Do not engage in any activity that causes distractions; otherwise, injury or property damage may occur.
- Do not operate the machine without all guards and other safety protective devices in place and functioning properly on the machine.
- Keep your hands and feet away from rotating parts. Keep clear of the discharge opening.
- Keep bystanders and children out of the operating area. Never allow children to operate the machine.
- Shut off the engine, remove the key (if equipped), and wait for all movement to stop before you leave the operator's position, Allow the machine to cool before adjusting, servicing, cleaning, or storing it.

Improperly using or maintaining this machine can result in injury. To reduce the potential for injury, comply with these safety instructions and always pay attention to the safety-alert symbol ⚠, which means Caution, Warning, or Danger—personal safety instruction. Failure to comply with these instructions may result in personal injury or death.

Safety and Instructional Decals

Safety decals and instructions are easily visible to the operator and are located near any area of potential danger. Replace any decal that is damaged or missing.

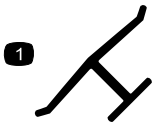

decaloemmarkt

Manufacturer's Mark

1. Indicates the blade is identified as a part from the original machine manufacturer.



decalbatterysymbols

Battery Symbols

Some or all of these symbols are on your battery.

1. Explosion hazard
2. No fire, open flame, or smoking
3. Caustic liquid/chemical burn hazard
4. Wear eye protection.
5. Read the *Operator's Manual*.
6. Keep bystanders away from the battery.
7. Wear eye protection; explosive gases can cause blindness and other injuries.
8. Battery acid can cause blindness or severe burns.
9. Flush eyes immediately with water and get medical help fast.
10. Contains lead; do not discard

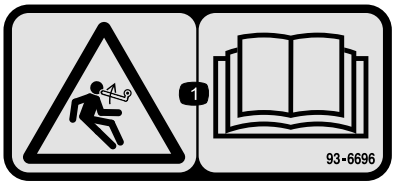

decal93-6696

93-6696

1. Stored energy hazard—read the *Operator's Manual*.



decal93-6697

93-6697

1. Read the *Operator's Manual*.
2. Add SAE 80w-90 (API GL-5) oil every 50 hours.

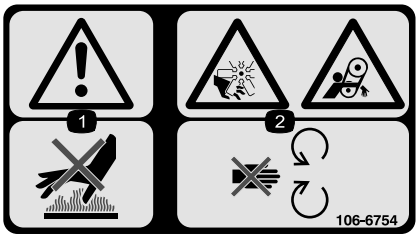

decal106-6754

106-6754

1. Warning—do not touch the hot surface.
2. Cutting/dismemberment hazard, fan and entanglement hazard, belt—stay away from moving parts.



decal106-6755

106-6755

1. Engine coolant under pressure.
2. Explosion hazard—read the *Operator's Manual*.
3. Warning—do not touch the hot surface.
4. Warning—read the *Operator's Manual*.

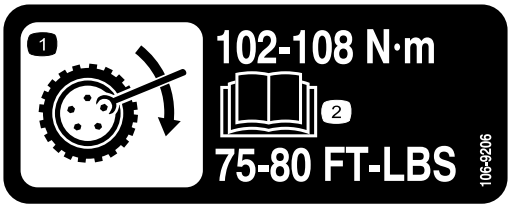

decal106-9206

106-9206

1. Wheel torque specifications
2. Read the *Operator's Manual*.

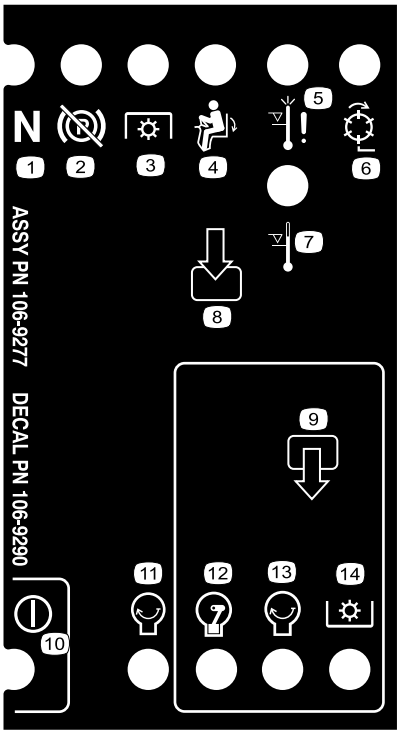

decal106-9290

106-9290

1. Inputs
2. Not active
3. High temperature shutdown
4. High temperature warning
5. In seat
6. Power takeoff (PTO)
7. Parking brake off
8. Neutral
9. Outputs
10. Power takeoff (PTO)
11. Start
12. Energize to run (ETR)
13. Start
14. Power

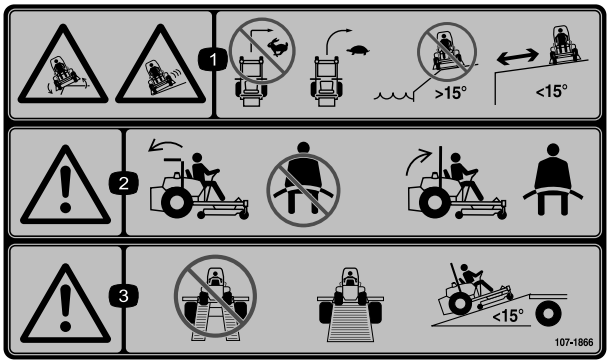

decal107-1866

107-1866

Note: This machine complies with the industry standard stability test in the static lateral and longitudinal tests with the maximum recommended slope indicated on the decal. Review the instructions for operating the machine on slopes in the *Operator's Manual* as well as the conditions in which you would operate the machine to determine whether you can operate the machine in the conditions on that day and at that site. Changes in the terrain can result in a change in slope operation for the machine. If possible, keep the cutting units lowered to the ground while operating the machine on slopes. Raising the cutting units while operating on slopes can cause the machine to become unstable.

1. Sliding/loss of control hazard; tipping hazard, drop-offs—do not turn at high speeds; turn at low speeds; do not use on slopes near open water; do not use on slopes greater than 15°; stay away from drop-offs.
2. Warning—if the roll bar is lowered, do not wear the seatbelt; if the roll bar is raised, wear the seatbelt.
3. Warning—do not use dual ramps when loading onto a trailer; use 1 ramp wide enough for the machine; use a ramp with a slope less than 15°.

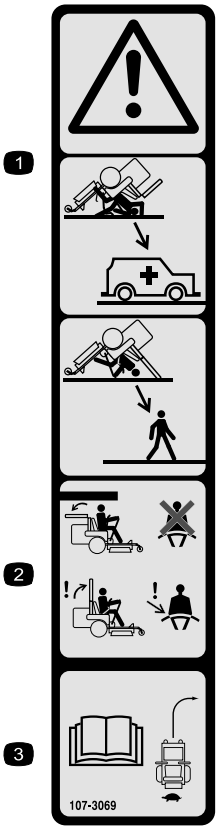

decal107-3069

107-3069

1. Warning–there is no rollover protection when the roll bar is down.
2. To avoid injury or death from a rollover accident, keep the roll bar in the raised and locked position and wear the seat belt. Lower the roll bar only when absolutely necessary; do not wear the seat belt when the roll bar is down.
3. Read the *Operator's Manual*; drive slowly and carefully.

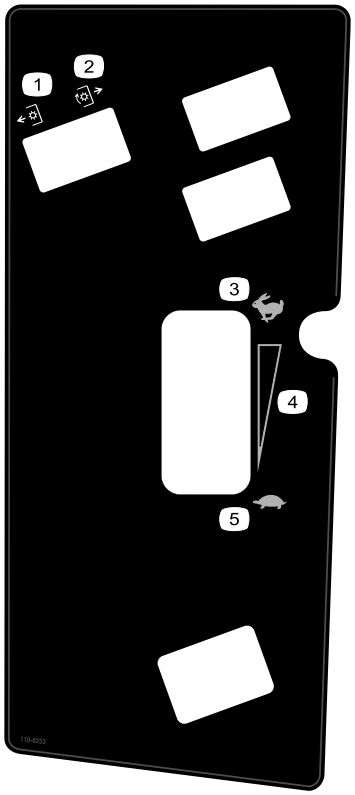

decal110-8253

110-8253

1. PTO–Off
2. PTO—On
3. Fast
4. Continuous-variable setting
5. Slow

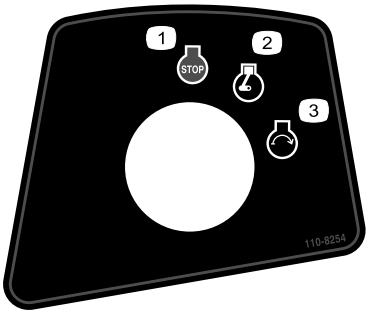

decal110-8254

110-8254

1. Engine–Stop
2. Engine—Run
3. Engine—Start

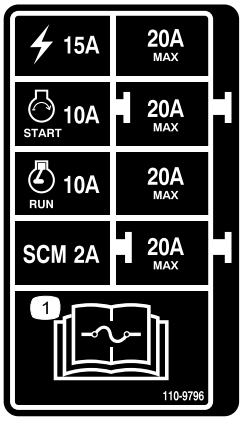

decal110-9796

110-9796

1. Read the *Operator's Manual* for information on fuses.



decal133-5618

133-5618

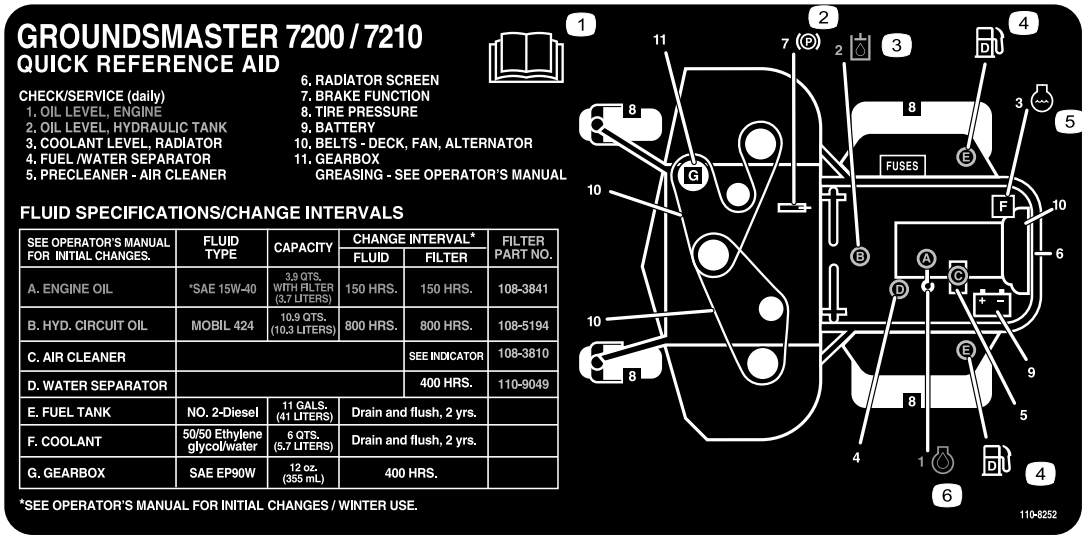

decal110-8252

110-8252

1. Read the *Operator's Manual.*
2. Parking brake
3. Hydraulic oil
4. Fuel
5. Engine coolant
6. Engine oil

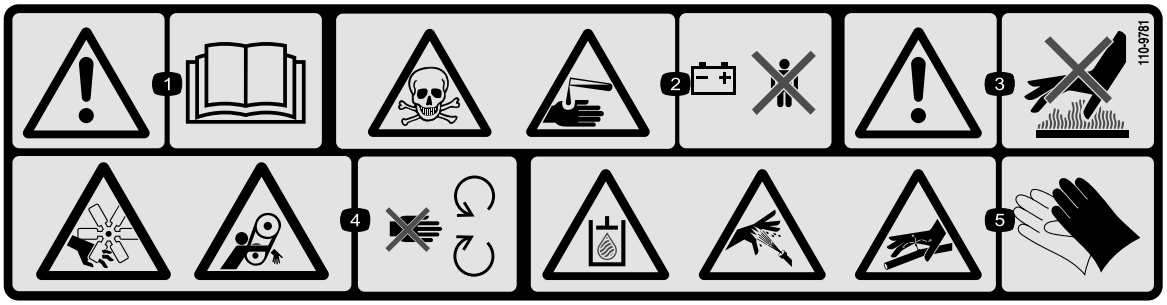

decal110-9781

110-9781

1. Warning—read the *Operator's Manual*.
2. Poison hazard; caustic liquid/chemical burn hazard—keep children away from the battery.
3. Warning—do not touch the hot surface.
4. Cutting/dismemberment hazard, fan; entanglement hazard, belt—stay away from moving parts.
5. Hydraulic fluid under pressure hazard; high pressure spray hazard; high pressure fluid hazard, injection into the body—wear hand and skin protection.

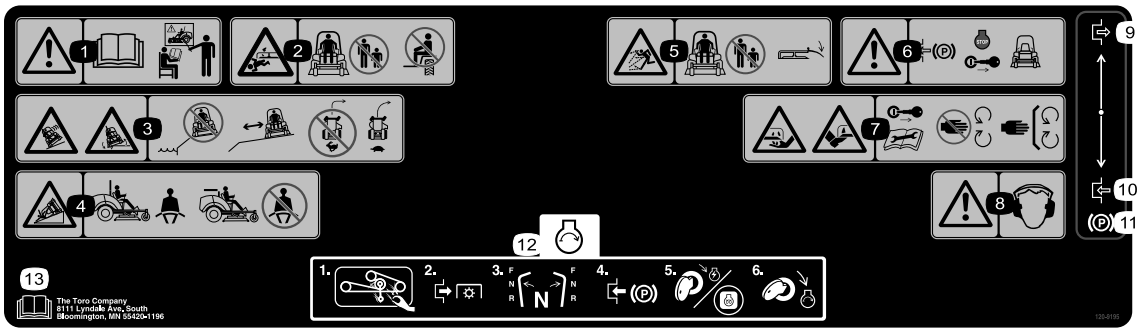

decal120-9195

120-9195

Note: This machine complies with the industry standard stability test in the static lateral and longitudinal tests with the maximum recommended slope indicated on the decal. Review the instructions for operating the machine on slopes in the *Operator's Manual* as well as the conditions in which you would operate the machine to determine whether you can operate the machine in the conditions on that day and at that site. Changes in the terrain can result in a change in slope operation for the machine. If possible, keep the cutting units lowered to the ground while operating the machine on slopes. Raising the cutting units while operating on slopes can cause the machine to become unstable.

1. Warning—read the *Operator's Manual*; do not operate the machine unless you are trained.
2. Cutting/dismemberment hazard, mower blade—keep bystanders away; do not carry passengers on the machine.
3. Sliding/loss of control hazard; tipping hazard, drop-offs—do not mow near drop-offs; keep away from drop-offs; do not turn at high speeds; turn at low speeds.
4. Tipping hazard—wear the seatbelt when a roll bar is in place; do not wear the seatbelt when the roll bar is lowered.
5. Thrown object hazard—keep bystanders away; lower the deflector before using the machine.
6. Warning—engage the parking brake, shut off the engine, and remove the key before leaving the machine.
7. Cutting/dismemberment hazard of hands or feet, mower blade—remove the key and read the *Operator's Manual* before performing maintenance; stay away from moving parts; keep all guards and shields in place.
8. Warning—wear hearing protection.
9. Disengage
10. Engage
11. Parking brake
12. Start the engine—Clean grass and debris from the mower belt and pulleys, disengage the PTO, set the drive in neutral, engage the parking brake, turn the key to power on the mower, and turn the key fully to start the engine.
13. Read the *Operator's Manual*.

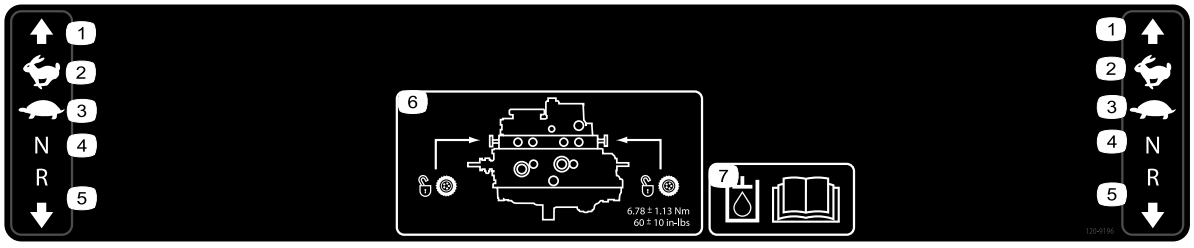

decal120-9196

120-9196

1. Forward
2. Fast
3. Slow
4. Neutral
5. Reverse
6. Tow valve location; torque the tow valves to 5.65 to 7.91 N·m (50 to 70 in-lb).
7. Read the *Operator's Manual* for more information on the hydraulic fluid.

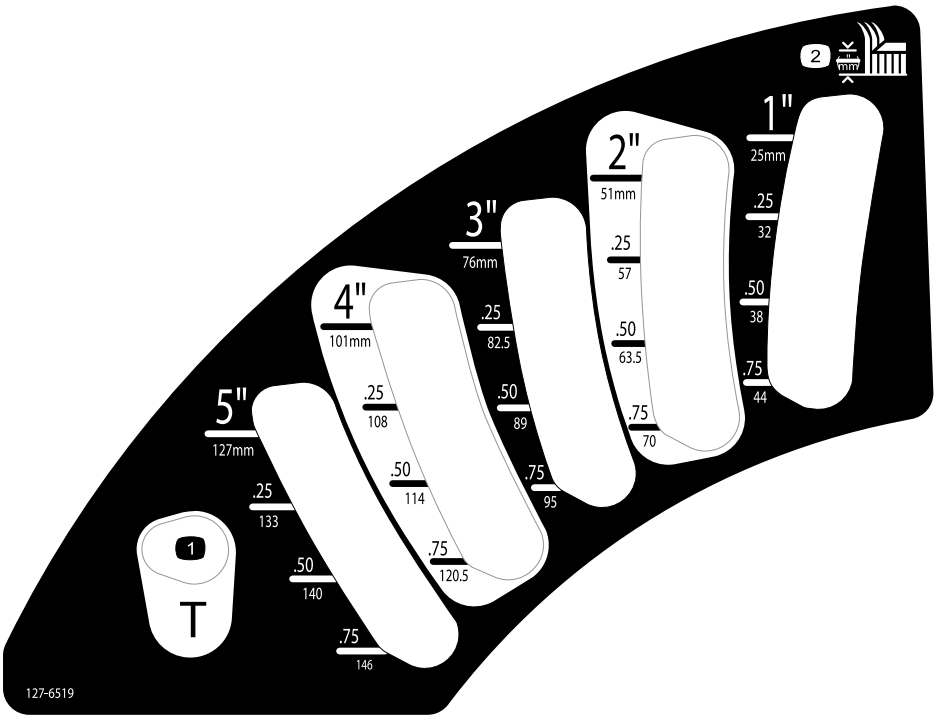

decal127-6519

127-6519

1. Transport position
2. Height of cut

Setup

Loose Parts

Use the chart below to verify that all parts have been shipped.

Procedure	Description	Qty.	Use
1	No parts required	–	Raise the ROPS.
2	Cutting unit Installation Instructions	1	Install the cutting unit.
3	No parts required	–	Adjust the left, front caster wheel.
4	No parts required	–	Check the tire pressure.
5	No parts required	–	Install weights.
6	No parts required	–	Check the hydraulic fluid, engine oil, and coolant levels.
7	Production-year decal	1	Install the decal (CE Machines Only).

Media and Additional Parts

Description	Qty.	Use
Operator's Manual	1	Review it before operating the machine.
Engine owner's manual	1	Use it to reference engine information.
Ignition keys	2	Start the engine.

1

Raising the Roll Bar

No Parts Required

Procedure

Raise the roll bar; refer to Adjusting the Roll Bar (page 22).

2

Installing the Cutting Unit

Parts needed for this procedure:

1	Cutting unit *Installation Instructions*

Procedure

Install the cutting unit using the *Installation Instructions* for that cutting unit.

3

Adjusting the Left, Front Caster Wheel

No Parts Required

Procedure

Adjust the left, front caster wheel to the outside position for 72-inch cutting units and to the inside position for 60-inch and 62-inch cutting units.

4

Checking the Tire Pressure

No Parts Required

Procedure

Check the tire pressure; refer to Checking the Tire Pressure (page 44).

Important: **Maintain pressure in all tires to ensure a good quality-of-cut and proper machine performance. Do not underinflate the tires.**

5

Installing Weights (for CE Compliance)

No Parts Required

Procedure

Machines with 183 cm (72 inch) decks installed and no other attachments do not need added weight to meet CE standards. However, you may need to purchase and install additional weight depending on the mower deck size/type and the attachments that you install on the machine. The following table lists the various attachment configurations and the additional front weight needed for each model:

Attachment Configuration	Weight Required with a 157.5 cm (62 inch) Base Deck (30457)	Weight Required with a 183 cm (72 inch) Base Deck (30353)	Weight Required with a 183 cm (72 inch) Side-discharge (30481)
Groundsmaster 7200/7210 Traction Unit with no Added Attachments	10 kg (22 lb)	0 kg (0 lb)	0 kg (0 lb)
Groundsmaster 7200/7210 Traction Unit and Hard Canopy	34 kg (75 lb)	9.5 kg (21 lb)	15 kg (33 lb)
Groundsmaster 7200/7210 Traction Unit, Hard Canopy, and Road Light Kit	32.2 kg (71 lb)	28.5 kg (63 lb)	10 kg (22 lb)
Groundsmaster 7200/7210 Traction Unit, Hard Canopy, Road Light Kit, and Jack Stand	18 kg (40 lb)	17 kg (37 lb)	10 kg (22 lb)
Groundsmaster 7200/7210 Traction Unit, Hard Canopy, and Jack Stand	14 kg (31 lb)	10 kg (22 lb)	10 kg (22 lb)
Groundsmaster 7200/7210 Traction Unit, Road Light Kit, and Jack Stand	0 kg (0 lb)	0 kg (0 lb)	0 kg (0 lb)
Groundsmaster 7200/7210 Traction Unit and Road Light Kit	11.3 kg (25 lb)	0 kg (0 lb)	0 kg (0 lb)
Groundsmaster 7200/7210 Traction Unit and Jack Stand	0 kg (0 lb)	0 kg (0 lb)	0 kg (0 lb)

Contact your authorized Toro distributor to obtain the appropriate kits and weights for your machine.

6

Checking the Fluid Levels

No Parts Required

Procedure

1. Check the hydraulic-fluid level before starting the engine, refer to Checking the Hydraulic System (page 54).
2. Check the engine-oil level before starting the engine, refer to Checking the Engine-Oil Level (page 39).
3. Check the cooling system before starting the engine; refer to Checking the Cooling System (page 46).

7

Installing the Decal (CE Machines Only)

Parts needed for this procedure:

1	Production-year decal

Procedure

On machines requiring CE compliance, install the production-year decal included in the loose parts (Figure 3).

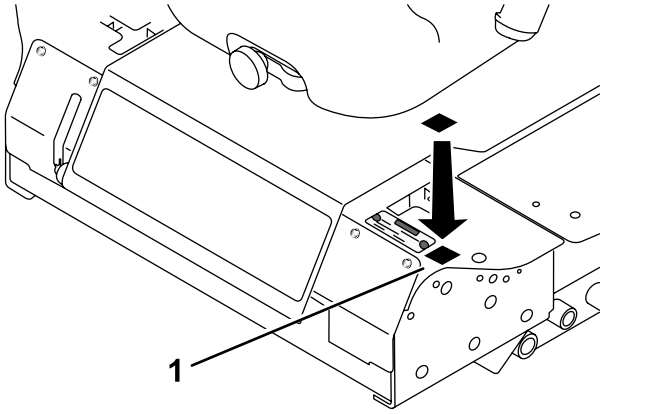

g278244

Figure 3

Product Overview

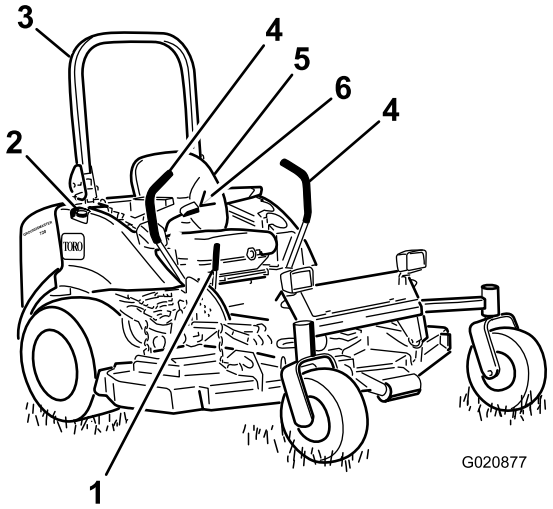

g020877

Figure 4

1. Parking-brake lever
2. Fuel cap (both sides)
3. Roll bar
4. Motion-control lever
5. Seat
6. Seat belt

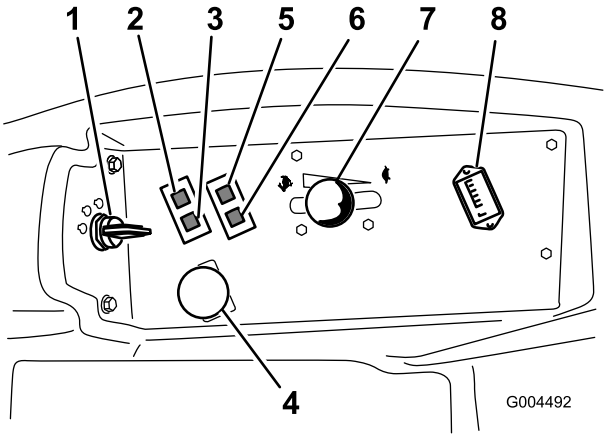

g004492

Figure 5

1. Ignition switch
2. Engine-coolant-temperature warning light
3. Glow-plug light
4. Power-takeoff (PTO) switch
5. Oil-pressure warning light
6. Charge-indicator light
7. Throttle lever
8. Hour meter

Controls

Become familiar with all the controls before you start the engine and operate the machine (Figure 4 and Figure 5).

Motion-Control Levers

The motion-control levers control the forward and rearward motions as well as the turning of the machine. Refer to Driving the Machine (page 28).

Parking-Brake Lever

Whenever you shut off the engine, engage the parking brake to prevent accidental movement of the machine. To engage the parking brake, pull the parking-brake lever rearward and up (Figure 6). To release the parking brake, push the parking-brake lever forward and down.

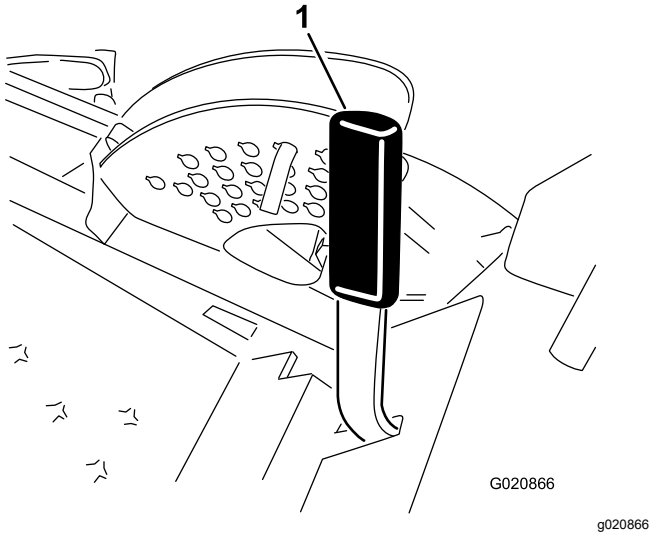

Figure 6

1. Parking-brake lever

Ignition Switch

The ignition switch has 3 positions: OFF, ON/PREHEAT, and START.

Throttle Lever

The throttle lever controls the speed of the engine, the speed of the blades, and, in conjunction with motion-control levers, the ground speed of the machine. Moving the throttle lever forward toward the FAST position increases the engine speed. Moving it rearward toward the SLOW position decreases the engine speed. Always run the machine with the throttle in the FAST position when cutting grass.

Power-Takeoff (PTO) Switch

The power-takeoff (PTO) switch starts and stops the mower blades.

Glow-Plug-Indicator Light (Orange Light)

The glow-plug-indicator light (Figure 5) turns on when you turn the ignition switch to the ON position. It remains on for 6 seconds. When the light turns off, you can start the engine.

Hour Meter

The hour meter records the number of hours that you operate the machine with the key switch in the RUN position. Use these times for scheduling regular maintenance.

Engine-Coolant-Temperature Warning Light

This light illuminates and the cutting blades stop if the engine-coolant temperature is high. If you do not stop the machine and the coolant temperature rises another 11° C (20° F), the engine shuts off.

Important: **If the mower deck shuts down and the temperature warning light is on, push the PTO knob down, drive to a safe, flat area, move the throttle lever to the SLOW position, move the motion-control levers into the NEUTRAL-LOCK position, and engage the parking brake. Idle the engine for several minutes while it cools to a safe level. Shut off the engine and check the cooling system; refer to Checking the Cooling System (page 46).**

Charge Indicator

The charge indicator illuminates if electrical charging system is operating above or below the normal operating range (Figure 5). Check and/or repair the electrical charging system.

Oil-Pressure Warning Light

The oil-pressure warning light glows if the engine-oil pressure drops below a safe level (Figure 5). If the oil pressure is low, shut off the engine and determine the cause. Repair the engine-oil system before you start the engine again.

Fuel Gauge

The fuel gauge (Figure 7) indicates the quantity of fuel remaining in the fuel tanks.

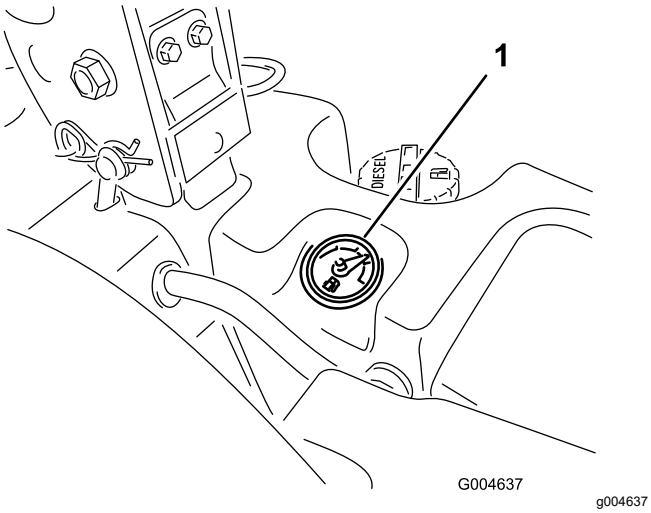

Figure 7

1. Fuel gauge

Specifications

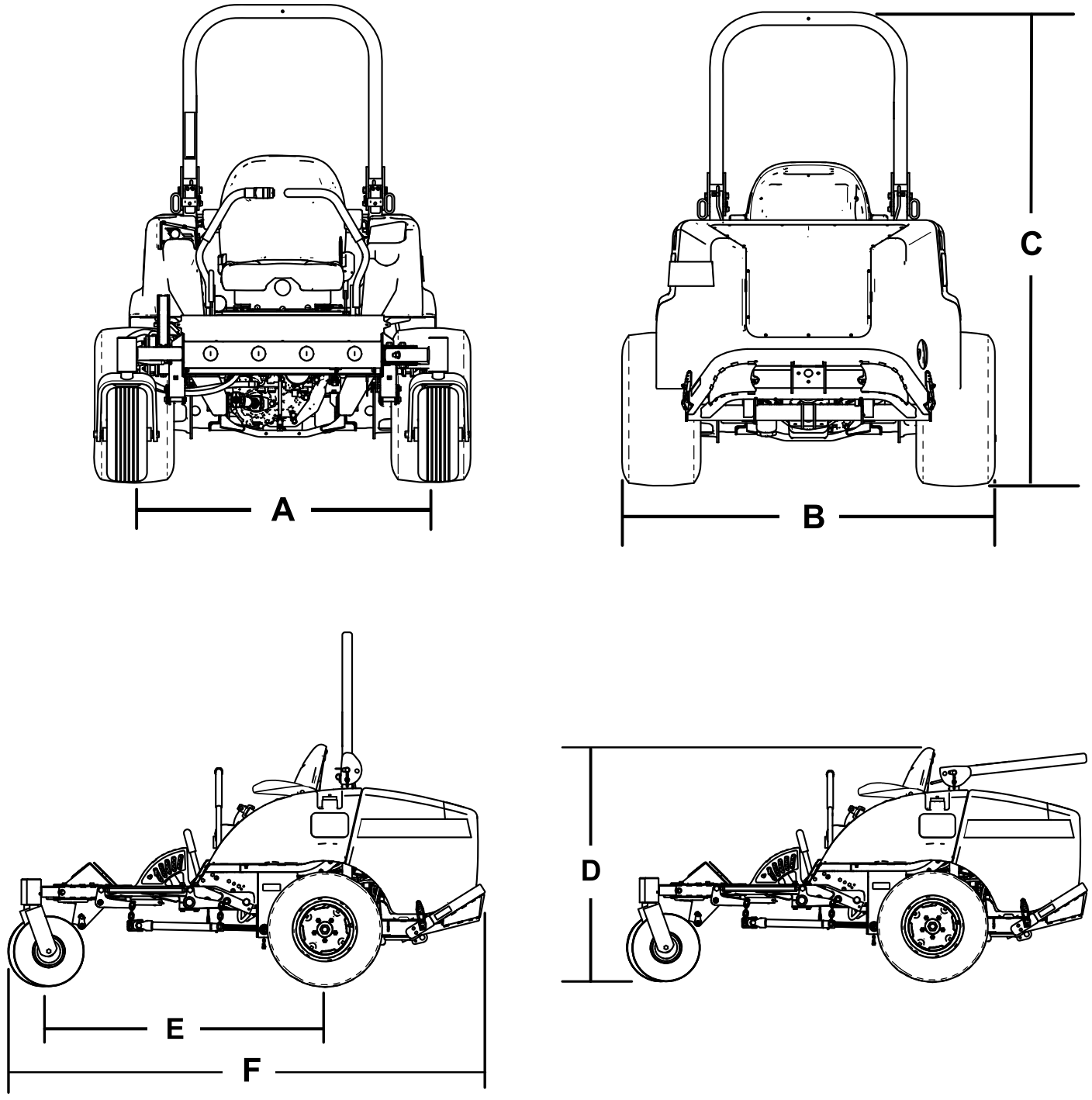

Figure 8

Description	Figure 8 reference	Dimension or Weight
Height with roll bar up	C	183 cm (72 inches)
Height with roll bar down	D	125 cm (49 inches)
Overall length	F	246 cm (97 inches)
Overall width	B	145 cm (57 inches)
Wheel base	E	145 cm (57-1/4 inches)
Wheel tread (tire center to center) rear	A	114 cm (45 inches)

Ground clearance		15 cm (6 inches)
Weight, with 72-inch Side-Discharge Cutting unit (30354 or 30481)		934 kg (2,060 lb)
Weight, with 60-inch Side-Discharge Cutting unit (30456)		900 kg (1,985 lb)
Weight, with 72-inch Base Cutting unit (30353)		876 kg (1,932 lb)
Weight, with 62-inch Base Cutting unit (30457)		855 kg (1,884 lb)

Note: Specifications and design are subject to change without notice.

Attachments/Accessories

A selection of Toro approved attachments and accessories is available for use with the machine to enhance and expand its capabilities. Contact your Authorized Service Dealer or authorized Toro distributor or go to www.Toro.com for a list of all approved attachments and accessories.

To ensure optimum performance and continued safety certification of the machine, use only genuine Toro replacement parts and accessories. Replacement parts and accessories made by other manufacturers could be dangerous, and such use could void the product warranty.

Operation

Note: Determine the left and right sides of the machine from the normal operating position.

Before Operation

Before Operation Safety

General Safety

- Never allow children or untrained people to operate or service the machine. Local regulations may restrict the age of the operator. The owner is responsible for training all operators and mechanics.
- Become familiar with the safe operation of the equipment, operator controls, and safety signs.
- Shut off the engine, remove the key (if equipped), and wait for all movement to stop before you leave the operator's position, Allow the machine to cool before adjusting, servicing, cleaning, or storing it.
- Know how to stop the machine and shut off the engine quickly.
- Check that operator-presence controls, safety switches, and guards are attached and functioning properly. Do not operate the machine unless they are functioning properly.
- Before mowing, always inspect the machine to ensure that the blades, blade bolts, and cutting assemblies are in good working condition. Replace worn or damaged blades and bolts in sets to preserve balance.
- Inspect the area where you will use the machine and remove all objects that the machine could throw.

Fuel Safety

- Use extreme care in handling fuel. It is flammable and its vapors are explosive.
- Extinguish all cigarettes, cigars, pipes, and other sources of ignition.
- Use only an approved fuel container.
- Do not remove the fuel cap or fill the fuel tank while the engine is running or hot.
- Do not add or drain fuel in an enclosed space.
- Do not store the machine or fuel container where there is an open flame, spark, or pilot light, such as on a water heater or other appliance.
- If you spill fuel, do not attempt to start the engine; avoid creating any source of ignition until the fuel vapors have dissipated.

Adding Fuel

Fuel Specification

- Never use kerosene or gasoline instead of diesel fuel.
- Never mix kerosene or used engine oil with the diesel fuel.
- Never keep fuel in containers with zinc plating on the inside.
- Do not use fuel additives.

Petroleum Diesel

Cetane rating: 40 or higher

Sulfur content: Low sulfur (<500 ppm) or ultra-low sulfur (<15 ppm)

Fuel Table

Diesel fuel specification	Location
ASTM D975 No. 1-D S15 No. 2-D S15	USA
EN 590	European Union
ISO 8217 DMX	International
JIS K2204 Grade No. 2	Japan
KSM-2610	Korea

- Use only clean, fresh diesel fuel or biodiesel fuels.
- Purchase fuel in quantities that can be used within 180 days to ensure fuel freshness.

Use summer-grade diesel fuel (No. 2-D) at temperatures above -7°C (20°F) and winter-grade fuel (No. 1-D or No. 1-D/2-D blend) below that temperature.

Note: Use of winter-grade fuel at lower temperatures provides lower flash point and cold flow characteristics which eases starting and reduces fuel filter plugging.

Using summer-grade fuel above -7°C (20°F) contributes toward longer fuel pump life and increased power compared to winter-grade fuel.

Using Biodiesel

This machine can also use a biodiesel-blended fuel of up to B20 (20% biodiesel, 80% petrodiesel).

Sulfur content: Ultra-low sulfur (<15 ppm)

Biodiesel fuel specification: ASTM D6751 or EN14214

Blended fuel specification: ASTM D975, EN590, or JIS K2204

Important: **The petroleum diesel portion must be ultra-low sulfur.**

Observe the following precautions:

- Biodiesel blends may damage painted surfaces.
- Use B5 (biodiesel content of 5%) or lesser blends in cold weather.
- Monitor seals, hoses, gaskets in contact with fuel as they may degrade over time.
- Fuel filter plugging may occur for a time after you convert to biodiesel blends.
- For more information on biodiesel, contact your authorized Toro distributor.

Fuel Tank Capacity

43.5 L (11.5 US gallons)

Filling the Fuel Tank

Important: **The fuel tanks are connected, but the fuel does not transfer quickly from one tank to the other. It is important when filling that you park on a level surface. If you park on a hill, you may inadvertently overfill the tanks.**

Important: **Do not overfill the fuel tanks.**

Important: **Do not open the fuel tanks when parked on a hill. The fuel could spill out.**

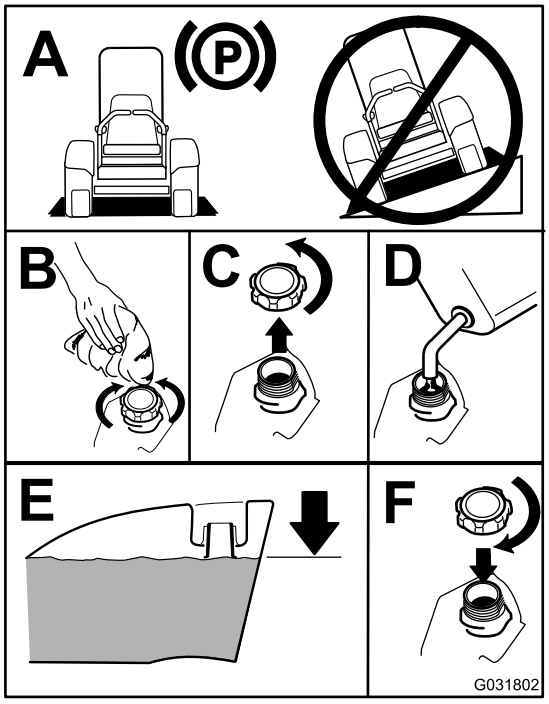

g031802

Figure 9

Note: If possible, fill the fuel tanks after each use. This minimizes buildup of condensation inside the fuel tank.

Checking the Engine-Oil Level

Before you start the engine and use the machine, check the oil level in the engine crankcase; refer to Checking the Engine-Oil Level (page 39).

Checking the Cooling System

Before you start the engine and use the machine, check the cooling system; refer to Checking the Cooling System (page 22).

Checking the Hydraulic System

Before you start the engine and use the machine, check the hydraulic system; refer to Checking the Hydraulic System (page 54).

Adjusting the Roll Bar

⚠ WARNING

To avoid injury or death from rollover, keep the roll bar in the raised locked position and use the seat belt.

Ensure that the seat is secured with the seat latch.

⚠ WARNING

There is no rollover protection when the roll bar is in the down position.

- **Do not operate the machine on uneven ground or on a hill side with the roll bar in the down position.**
- **Lower the roll bar only when absolutely necessary.**
- **Do not wear the seat belt when the roll bar is in the down position.**
- **Drive slowly and carefully.**
- **Raise the roll bar as soon as clearance permits.**
- **Check carefully for overhead clearances (i.e., branches, doorways, electrical wires) before driving under any objects and do not contact them.**

Important: **Always use the seat belt when the roll bar is in the raised and locked position. Do not use the seat belt when the roll bar is in the lowered position.**

Lowering the Roll Bar

Lower the roll bar as shown in Figure 11.

Note: Push the bar forward to relieve pressure on the pins.

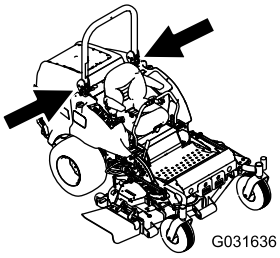

g031636

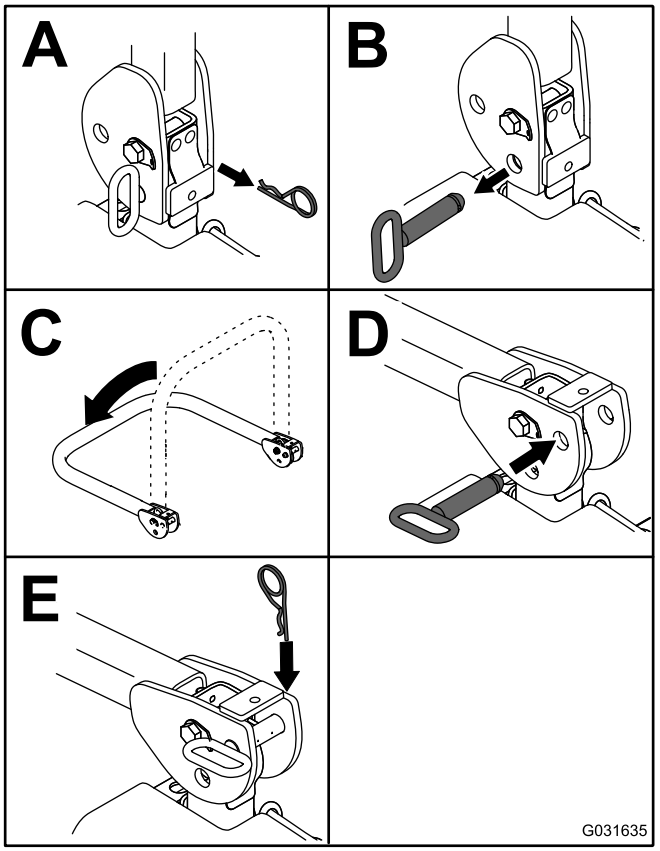

g031635

Figure 10

Note: Secure the roll bar so that it does not damage the hood.

Raising the Roll Bar

Raise the roll bar as shown in Figure 10.

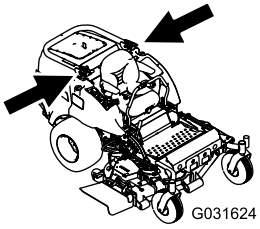

g031624

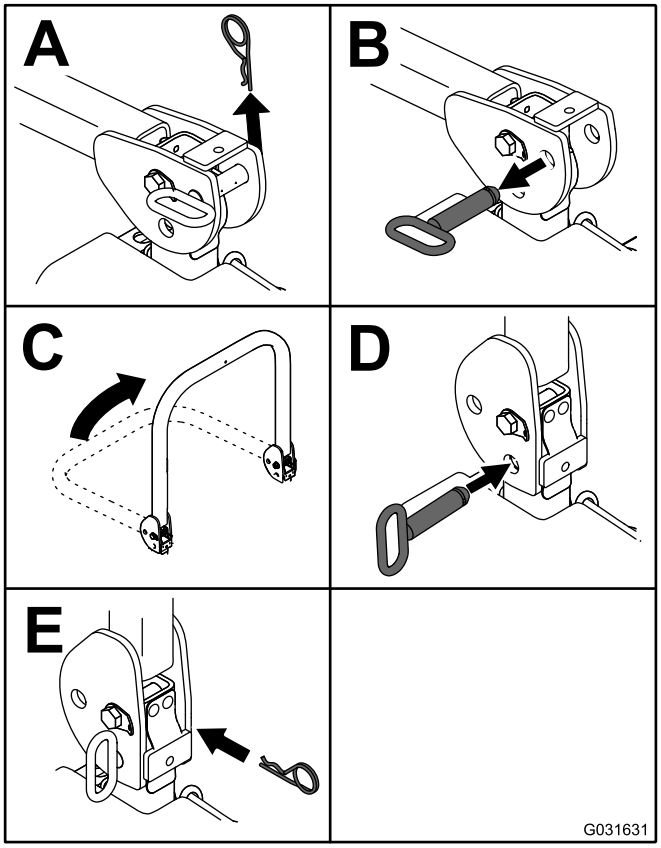

g031631

Figure 11

Important: **Always use the seat belt when the roll bar is in the raised and locked position. Do not use the seat belt when the roll bar is in the lowered position.**

Using the Safety-Interlock System

⚠ CAUTION

If the safety-interlock switches are disconnected or damaged, the machine could operate unexpectedly, causing personal injury.

- **Do not tamper with the interlock switches.**
- **Check the operation of the interlock switches daily and replace any damaged switches before operating the machine.**

Understanding the Safety-Interlock System

The safety-interlock system prevents the engine from starting unless:

- You are sitting on the seat or the parking brake is engaged.
- The power takeoff (PTO) is disengaged.
- The motion-control levers are in the NEUTRAL-LOCK position.
- The engine temperature is below the maximum operating temperature.

The safety-interlock system also shuts off the engine when you move the traction controls from the NEUTRAL-LOCK position with the parking brake engaged. If you rise from the seat when the PTO is engaged, there is a 1-second delay and then the engine shuts off.

Testing the Safety-Interlock System

Service Interval: Before each use or daily

Test the safety-interlock system before you use the machine each time. If the safety system does not operate as described below, have an Authorized Service Dealer repair the safety system immediately.

1. Sit on the seat, engage the parking brake, and move the PTO to the ON position. Try starting the engine; the engine should not crank.
2. Sit on the seat, engage the parking brake, and move the PTO to the OFF position. Move either motion-control lever out of the NEUTRAL-LOCK position. Try starting the engine; the engine should not crank. Repeat for other motion-control lever.
3. Sit on the seat, engage the parking brake, move the PTO switch to the OFF position, and move the motion-control levers to the NEUTRAL-LOCK

position. Start the engine. While the engine is running, release the parking brake, engage the PTO, and rise slightly from the seat; the engine should shut off within 2 seconds.

4. Without an operator on the seat, engage the parking brake, move the PTO switch to the OFF position, and move the motion-control levers to the NEUTRAL-LOCK position. Start the engine. While the engine is running, center either motion control; the engine should shut off within 2 seconds. Repeat for the other motion-control lever.
5. Without an operator on the seat, disengage the parking brake, move the PTO switch to the OFF position, and move the motion-control levers to the NEUTRAL-LOCK position. Try starting the engine; the engine should not crank.

Using the SCM to Diagnose System Problems

The machine is equipped with a standard control module (SCM) monitoring system that tracks the function of various key systems. The SCM is located under the right control panel. Access it through the side panel cover (Figure 12). To open the side panel cover, release the 2 latches and pull out on it.

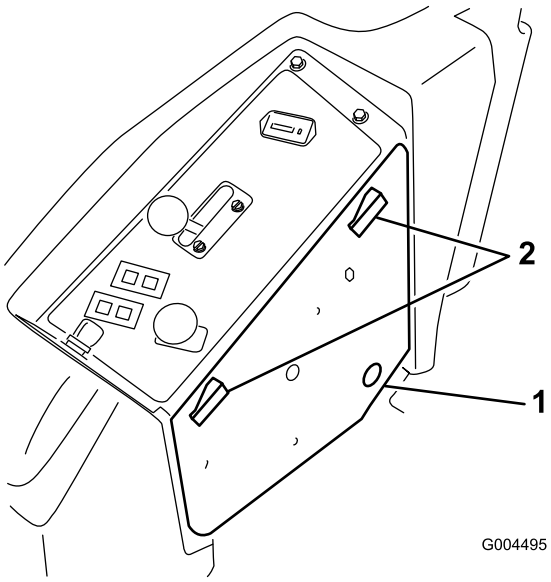

g004495

Figure 12

1. Side panel cover
2. Latches

On the face of the SCM are 11 LEDs that illuminate to indicate various system conditions. You can use 7 of these lights for system diagnosis. Refer to Figure 13 for a description of what each light means. For details on using the rest of the SCM functions, refer to the *Service Manual*, available through your authorized Toro distributor.

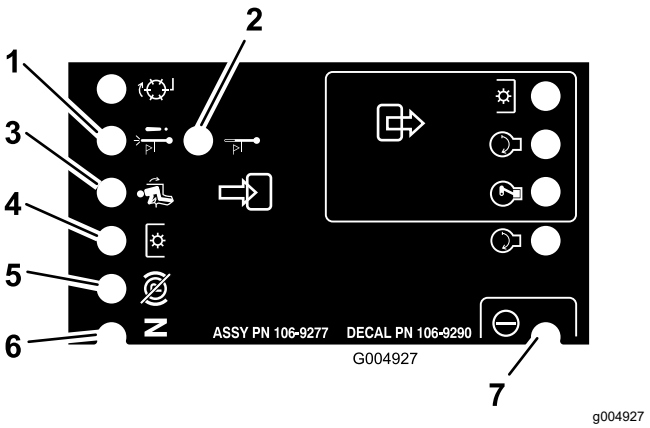

g004927

Figure 13

1. High temperature shutdown—the engine temperature has exceeded safe levels and the engine has been shut down. Check the cooling system.
2. High temperature warning—the engine temperature is approaching unsafe levels and the cutting unit has been shut down. Check the cooling system.
3. Operator is in the seat.
4. The PTO is on.
5. The parking brake is not engaged.
6. Controls are in neutral.
7. The SCM is receiving power and is operational.

Positioning the Seat

The seat moves forward and backward. Position the seat where you have the best control of the machine and are most comfortable.

To adjust, move the lever sideways to unlock the seat (Figure 14).

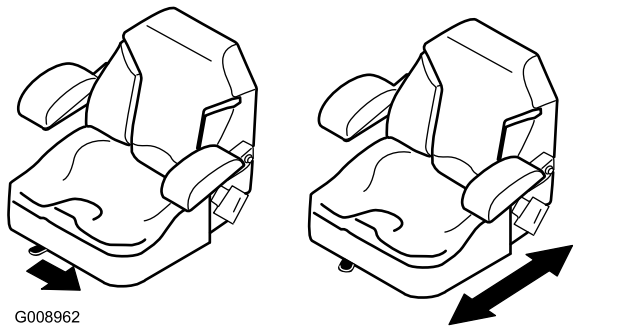

g008962

Figure 14

Changing the Seat Suspension

The seat is adjustable to provide a smooth and comfortable ride. Position the seat where you are most comfortable.

To adjust it, turn the knob in front either direction to provide the best comfort (Figure 15).

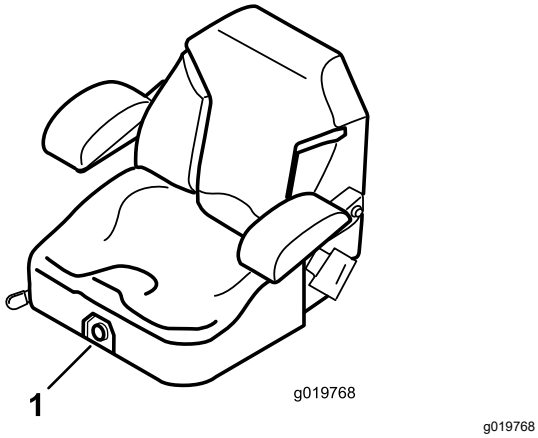

g019768

Figure 15

1. Seat-suspension knob

Unlatching the Seat

To access the hydraulic and other systems under the seat, unlatch the seat and swing it forward.

1. Use the seat position adjustment lever to slide the seat all the way forward.
2. Pull the seat latch forward and lift up to unlatch the seat (Figure 16).

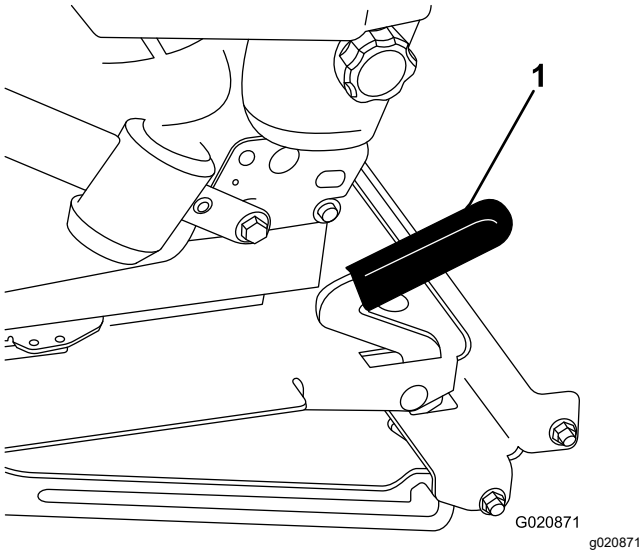

g020871

Figure 16

1. Seat latch

During Operation

During Operation Safety

General Safety

- The owner/operator can prevent and is responsible for accidents that may cause personal injury or property damage.
- Wear appropriate clothing, including eye protection; long pants; substantial, slip-resistant footwear; and hearing protection. Tie back long hair and do not wear loose clothing or loose jewelry.
- Do not operate the machine while ill, tired, or under the influence of alcohol or drugs.
- Use your full attention while operating the machine. Do not engage in any activity that causes distractions; otherwise, injury or property damage may occur.
- Before you start the engine, ensure that all drives are in neutral, the parking brake is engaged, and you are in the operating position.
- Do not carry passengers on the machine and keep bystanders and children out of the operating area.
- Operate the machine only in good visibility to avoid holes or hidden hazards.
- Avoid mowing on wet grass. Reduced traction could cause the machine to slide.
- Keep your hands and feet away from rotating parts. Keep clear of the discharge opening.
- Look behind and down before backing up to be sure of a clear path.
- Use care when approaching blind corners, shrubs, trees, or other objects that may obscure your vision.
- Stop the blades whenever you are not mowing.
- Stop the machine, remove the key, and wait for all moving parts to stop before inspecting the attachment after striking an object or if there is an abnormal vibration in the machine. Make all necessary repairs before resuming operation.
- Slow down and use caution when making turns and crossing roads and sidewalks with the machine. Always yield the right-of-way.
- Disengage the drive to the cutting unit, shut off the engine, remove the key, and wait for all moving parts to stop before adjusting the height of cut (unless you can adjust it from the operating position).

- Operate the engine only in well-ventilated areas. Exhaust gases contain carbon monoxide, which is lethal if inhaled.
- Never leave a running machine unattended.
- Before you leave the operator's position, do the following:
  - Park the machine on a level surface.
  - Disengage the power takeoff and lower the attachments.
  - Engage the parking brake.
  - Shut off the engine and remove the key (if equipped).
  - Wait for all movement to stop.
- Operate the machine only in good visibility and appropriate weather conditions. Do not operate the machine when there is the risk of lightning.
- Do not use the machine as a towing vehicle.
- Use accessories, attachments, and replacement parts approved by Toro only.

Rollover Protection System (ROPS) Safety

- Do not remove any of the ROPS components from the machine.
- Ensure that the seat belt is attached and that you can release it quickly in an emergency.
- Check carefully for overhead obstructions and do not contact them.
- Keep the ROPS in safe operating condition by thoroughly inspecting it periodically for damage and keeping all the mounting fasteners tight.
- Replace damaged ROPS components. Do not repair or alter them.
- Always use the seat belt with the roll bar in the raised position.
- The ROPS is an integral safety device. Keep a folding roll bar in the raised and locked position, and use the seat belt when operating the machine with the roll bar in the raised position.
- Lower a folding roll bar temporarily only when necessary. Do not wear the seat belt when the roll bar is folded down.
- Be aware that there is no rollover protection when a folded roll bar is in the down position.
- Check the area that you will be mowing and never fold down a folding roll bar in areas where there are slopes, drop-offs, or water.

Slope Safety

- Slopes are a major factor related to loss of control and rollover accidents, which can result in severe injury or death. You are responsible for safe slope operation. Operating the machine on any slope requires extra caution.
- Evaluate the site conditions to determine if the slope is safe for machine operation, including surveying the site. Always use common sense and good judgment when performing this survey.
- Review the slope instructions listed below for operating the machine on slopes and to determine whether you can operate the machine in the conditions on that day and at that site. Changes in the terrain can result in a change in slope operation for the machine.
- Avoid starting, stopping, or turning the machine on slopes. Avoid making sudden changes in speed or direction. Make turns slowly and gradually.
- Do not operate a machine under any conditions where traction, steering, or stability is in question.
- Remove or mark obstructions such as ditches, holes, ruts, bumps, rocks, or other hidden hazards. Tall grass can hide obstructions. Uneven terrain could overturn the machine.
- Be aware that operating the machine on wet grass, across slopes, or downhill may cause the machine to lose traction. Loss of traction to the drive wheels may result in sliding and a loss of braking and steering.
- Use extreme caution when operating the machine near drop-offs, ditches, embankments, water hazards, or other hazards. The machine could suddenly roll over if a wheel goes over the edge or the edge caves in. Establish a safety area between the machine and any hazard.
- Identify hazards at the base of the slope. If there are hazards, mow the slope with a pedestrian-controlled machine.
- If possible, keep the cutting unit(s) lowered to the ground while operating on slopes. Raising the cutting unit(s) while operating on slopes can cause the machine to become unstable.
- Use extreme caution with grass-collection systems or other attachments. These can change the stability of the machine and cause a loss of control.

Operating the Parking Brake

Always engage the parking brake when you stop the machine or leave it unattended.

Engaging the Parking Brake

⚠ WARNING

The parking brake may not hold the machine parked on a slope and could cause personal injury or property damage.

Do not park the machine on slopes unless the wheels are chocked or blocked.

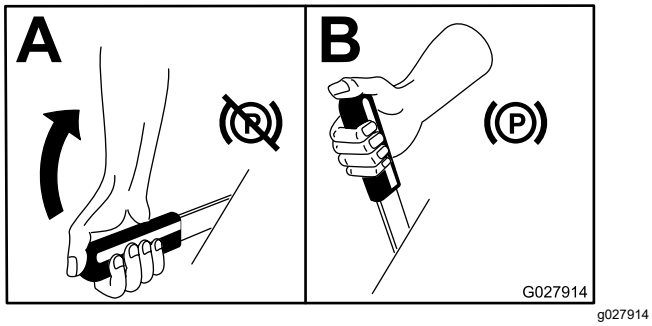

Figure 17

Releasing the Parking Brake

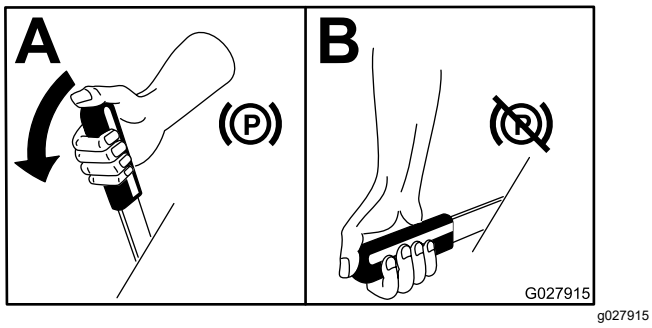

Figure 18

Starting the Engine

Note: The glow plug light illuminates for 6 seconds when you turn the ignition key to the RUN position. Turn the ignition to the START position after the light goes out.

Important: **Use starting cycles of no more than 15 seconds per minute to avoid overheating the starter motor.**

Important: **Operate the machine with the throttle lever in the SLOW position in both the forward and reverse directions for 1 to 2 minutes after changing the engine oil, overhauling either the engine, transmission, or wheel motor, and when you start the engine for the first time. Operate the lift lever and PTO lever to ensure that they operate properly. Shut the engine off, check fluid levels, and check for oil leaks, loose parts, and any other noticeable malfunctions.**

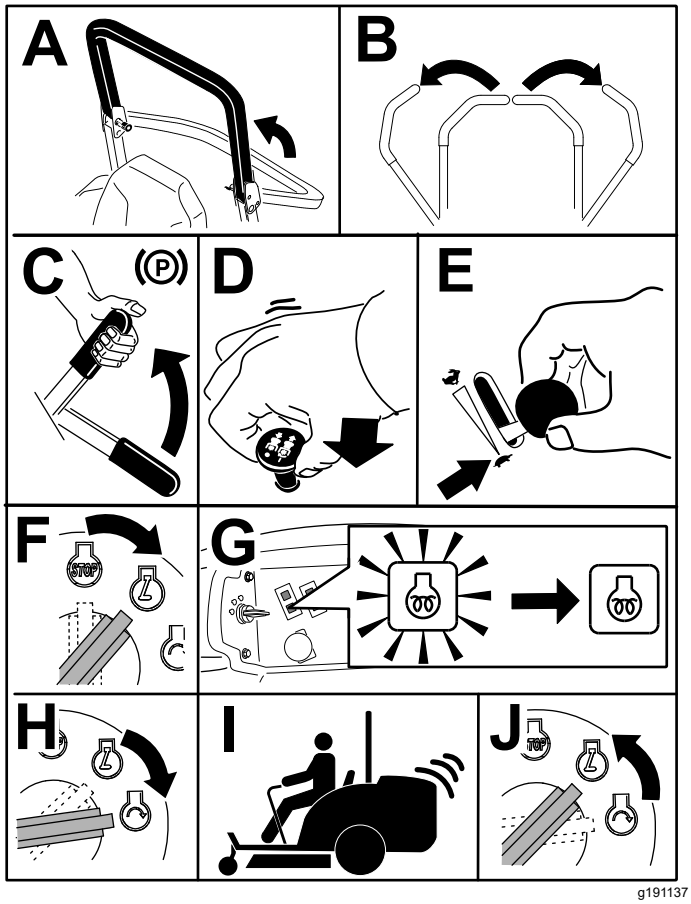

Figure 19

Note: Leave the throttle midway between the SLOW and FAST positions until the engine and hydraulic system warm up.

Driving the Machine

The throttle control regulates the engine speed as measured in rpm (revolutions per minute). Place the throttle control in the FAST position for best performance. Always operate in the FAST throttle position when running powered attachments.

⚠ CAUTION

The machine can turn very rapidly. You may lose control of it and cause personal injury or damage the machine.

- **Use caution when making turns.**
- **Slow the machine down before making sharp turns.**

1. Release the parking brake.

   Note: The engine shuts off if you move the motion-control levers out of the NEUTRAL-LOCK position with the parking brake engaged.

2. Move the levers to the center, unlocked position.
3. Drive the machine as follows:
   - To move straight forward, slowly push the motion-control levers forward (Figure 20).
   - To move straight rearward, slowly pull the motion-control levers rearward (Figure 20).
   - To turn, slow the machine by pulling back on both levers and then push forward on the lever on the opposite side from which you want to turn (Figure 20).
   - To stop, pull the motion-control levers to the NEUTRAL position.

   Note: The farther you move the motion-control levers in either direction, the faster the machine moves in that direction.

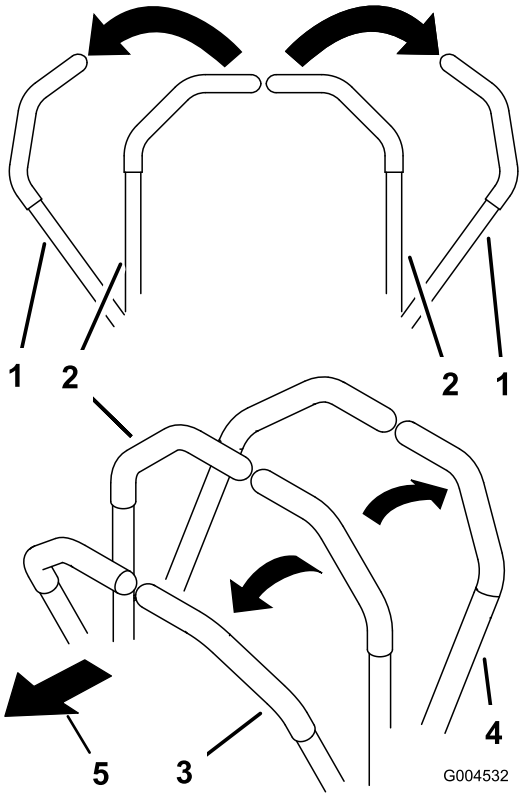

g004532

Figure 20

1. Motion-control lever—NEUTRAL-LOCK position
2. Center, unlocked position
3. Forward
4. Backward
5. Front of the machine

Shutting Off the Engine

⚠ CAUTION

Children or bystanders may be injured if they attempt to move or operate the tractor while it is unattended.

Always remove the ignition key and engage the parking brake when leaving the machine unattended, even if just for a few minutes.

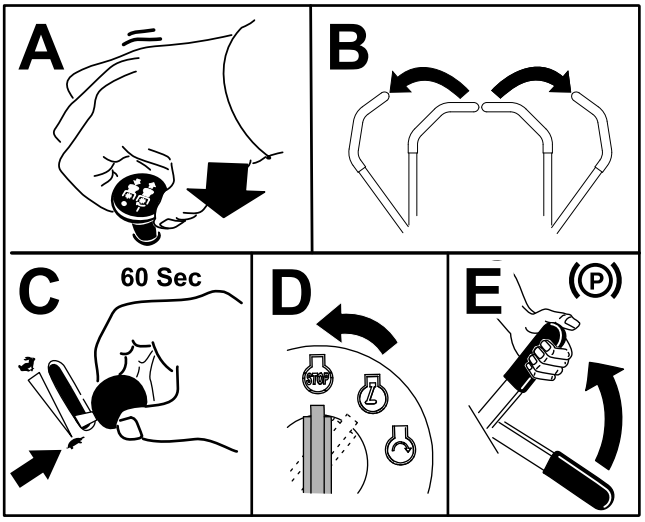

g244208

Figure 21

Operating the Mower

Using the Deck-Lift Switch

The deck-lift switch raises and lowers the cutting unit (Figure 22). The engine must be running for you to use this lever.

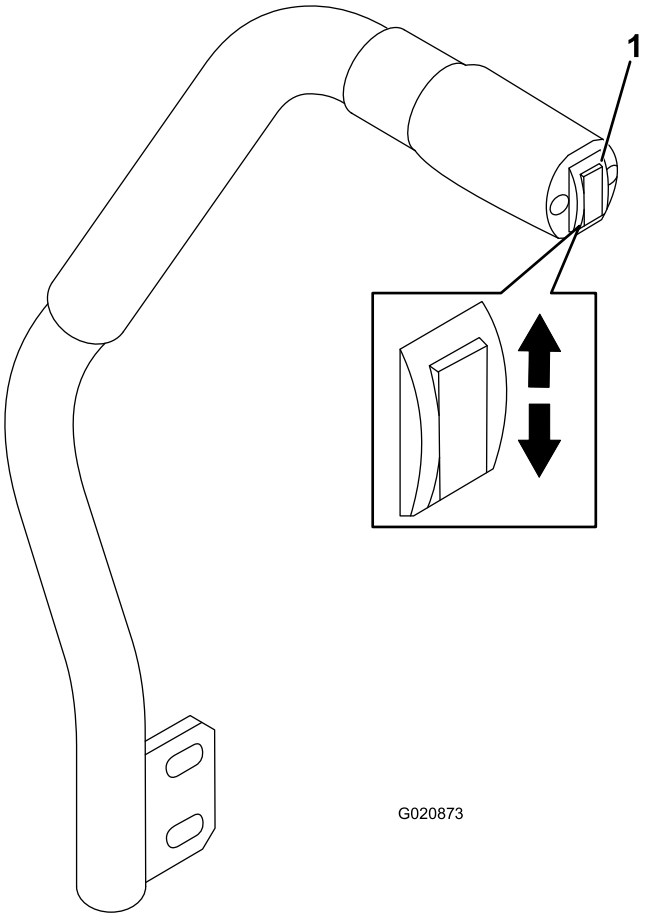

g020873

Figure 22

1. Deck-lift switch

- To lower the cutting unit, push the deck-lift switch down (Figure 22).

  Important: **When you lower the cutting unit, it sets in a float/idle position.**

- To raise the mover deck, push the deck-lift switch up (Figure 22).

Important: **Do not continue to hold the switch up or down after the mower has fully raised or lowered. Doing so damages the hydraulic system.**

Engaging the Power Takeoff (PTO)

The power-takeoff (PTO) switch starts and stops the mower blades and some powered attachments.

Note: If the engine is cold, allow the engine to warm up 5 to 10 minutes before engaging the PTO.

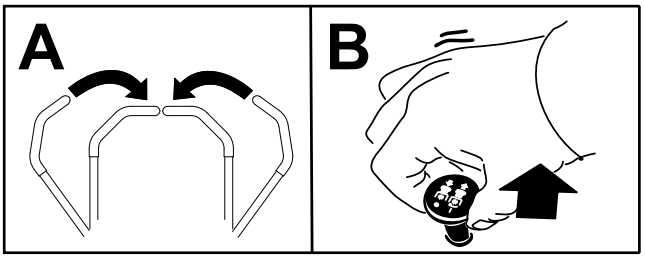

g243799

Figure 23

Disengaging the PTO

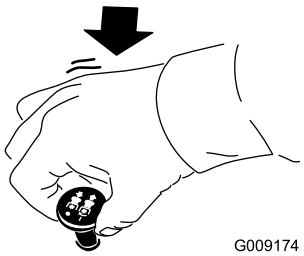

G009174

g009174

Figure 24

Adjusting the Height of Cut

You can adjust the height of cut from 2.5 to 15.8 cm (1 to 6 inches) in 6 mm (1/4 inch) increments by relocating the stop pin into different hole locations.

1. With the engine running, push the deck-lift switch up until the cutting unit is fully raised and **release the switch immediately** (Figure 22).
2. Rotate the stop pin until the roll pin in it lines up with the slots in the holes in the height-of-cut bracket and remove it (Figure 25).
3. Select a hole in the height-of-cut bracket corresponding to the height of cut desired, insert the pin, and rotate it down to lock it in place (Figure 25).

   Note: There are 4 rows of hole positions (Figure 25). The top row gives you the height of cut listed above the pin. The second row down gives you the height listed plus 6 mm (1/4 inch). The third row down gives you the height listed plus 12 mm (1/2 inch). The bottom row gives you the height listed plus 18 mm (3/4 inch). For the 15.8 cm (6 inch) position, there is only 1 hole, located in the second row. This does not add 6 mm (1/4 inch) to the 15.8 cm (6 inch) position.

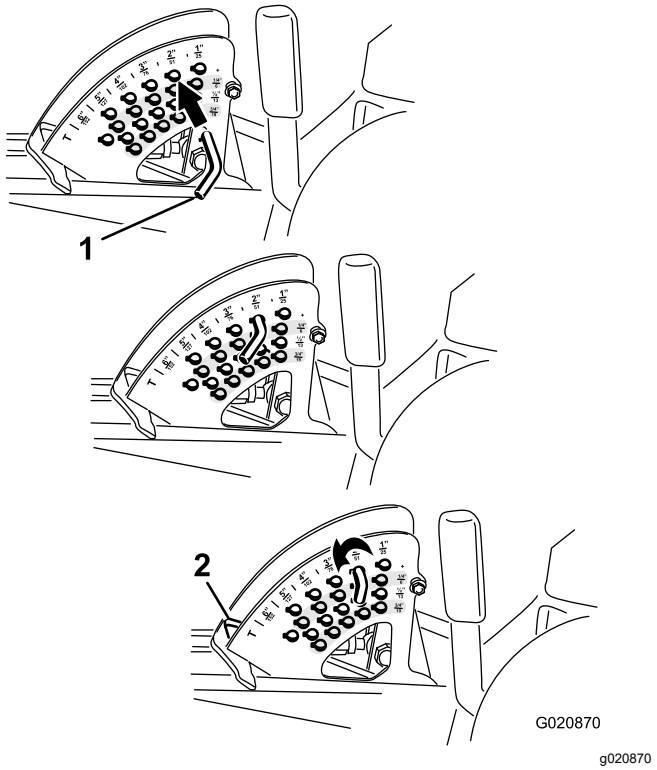

g020870

Figure 25

1. Stop pin
2. Height-of-cut stop

4. Adjust the anti-scalp rollers and skids as required.

Operating Tips

Fast Throttle Setting/Ground Speed

To maintain enough power for the machine and deck while mowing, operate the engine at the FAST throttle position and adjust your ground speed for conditions. Decrease the ground speed as the load on the cutting blades increase; increase the ground speed as the load on the blades decrease.

Alternating the Mowing Direction

Alternate your mowing direction to avoid making ruts in the turf, which can appear over time. This also helps to disperse clippings, which enhances decomposition and fertilization.

Cutting Speed

To improve cut quality, use a slower ground speed in certain conditions.

Avoiding a Low Cut

If the machine cutting width is wider than the machine that you previously used, raise the cutting height to ensure that uneven turf is not cut too short.

Select the Proper Height-of-Cut Setting to Suit Conditions

Remove approximately 25 mm (1 inch) or no more than 1/3 of the grass blade when cutting. In exceptionally lush and dense grass, you may need to slow down the forward speed and/or raise the height-of-cut to the next higher setting.

Important: **If you are cutting more than 1/3 of the grass blade, or are mowing in sparse long grass or dry conditions, use the flat sail of the blades to reduce air-borne chaff, debris, and strain on the deck-drive components.**

Cutting Long Grass

If you allow the grass to grow slightly longer than normal, or if the grass contains a high degree of moisture, raise the cutting height to a higher setting and cut the grass at this setting. Then cut the grass again using the lower, normal setting.

Keeping the Mower Clean

Clean clippings and dirt from the underside of the mower after each use. If grass and dirt build up inside the mower, cutting quality eventually becomes unsatisfactory.

To reduce the risk of fire hazard, keep the engine, muffler, battery compartment, parking brake, cutting units, and fuel storage compartment free of grass, leaves, or excessive grease. Clean up any spilled oil or fuel.

Maintaining the Blades

- Maintain sharp blades throughout the cutting season. Sharp blades create a clean cut without tearing or shredding the grass blades. Tearing and shredding causes grass to turn brown at the edges, which slows growth and increases the chance of disease.
- Check the blades daily for sharpness and for any wear or damage. Sharpen the blades as necessary.
- If a blade is damaged or worn, replace it immediately with a genuine Toro replacement blade. Refer to the cutting unit *Operator's Manual* for instructions to replace the blade.

After Operation

General Safety

- Shut off the engine, remove the key (if equipped), and wait for all movement to stop before you leave the operator's position, Allow the machine to cool before adjusting, servicing, cleaning, or storing it.
- Clean grass and debris from the cutting units, mufflers, and engine compartment to help prevent fires. Clean up oil or fuel spills.
- If the cutting units are in the transport position, use the positive mechanical lock (if available) before you leave the machine unattended.
- Allow the engine to cool before storing the machine in any enclosure.
- Remove the key and shut off the fuel (if equipped) before storing or hauling the machine.
- Never store the machine or fuel container where there is an open flame, spark, or pilot light, such as on a water heater or on other appliances.
- Maintain and clean the seat belt(s) as necessary

Pushing the Machine

In an emergency, you can move the machine a very short distance by actuating the bypass valves in the hydraulic pump and pushing the machine.

Important: **Always push the machine by hand and never a long distance. Never tow the machine, because damage to the hydraulic system may occur.**

Important: **The bypass valves must be open whenever you push or tow the machine. Close the valves once you have pushed or towed the machine to the desired location.**

1. Lift the seat; refer to Unlatching the Seat (page 25)
2. Locate the bypass valves (Figure 26) and rotate each bypass valve counterclockwise 1 turn.

   Note: This allows hydraulic fluid to bypass the pump, enabling the wheels to turn.

   Important: **Do not rotate the bypass valves more than 1 turn. This prevents valves from coming out of the body and causing fluid to run out.**

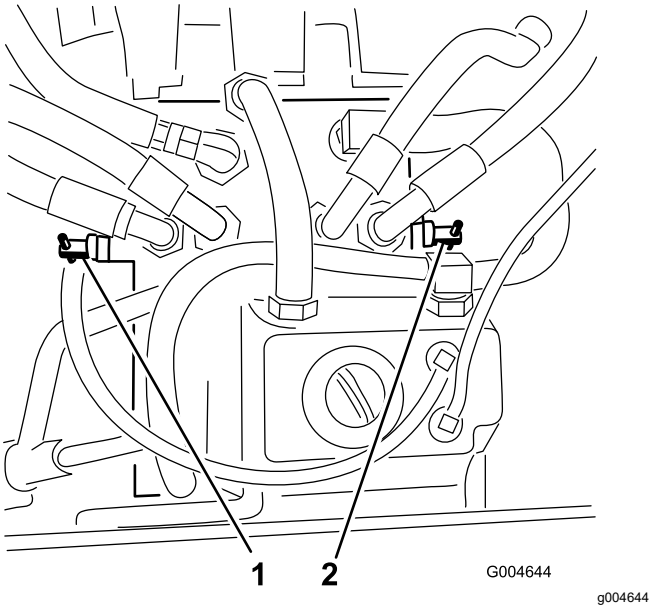

Figure 26

1. Right bypass valve
2. Left bypass valve

3. Ensure that the parking brake is disengaged and push the machine to the desired location.
4. Close the valves by rotating each valve 1 clockwise turn (Figure 26).

   Note: Do not overtighten the valves.
5. Torque the valves to approximately 8 N·m (71 in-lb).

   Important: **Ensure that the bypass valves are closed before you start the engine. Running the engine with open bypass valves causes the transmission to overheat.**

Hauling the Machine

Use a heavy-duty trailer or truck to haul the machine. Ensure that the trailer or truck has all the necessary brakes, lighting, and marking as required by law. Please carefully read all the safety instructions. Knowing this information could help you, your family, pets, or bystanders avoid injury.

⚠ WARNING

Driving on the street or roadway without turn signals, lights, reflective markings, or a slow-moving-vehicle emblem is dangerous and can lead to accidents causing personal injury.

Do not drive the machine on a public street or roadway.

1. If you are using a trailer, connect it to the towing vehicle, and connect the safety chains.
2. If applicable, connect the trailer brakes.
3. Load the machine onto the trailer or truck; refer to Loading the Machine (page 33).
4. Shut off the engine, remove the key, engage the parking brake, and close the fuel valve.
5. Use the tie-down loops on the machine to securely fasten it to the trailer or truck with straps, chains, cable, or ropes (Figure 27).

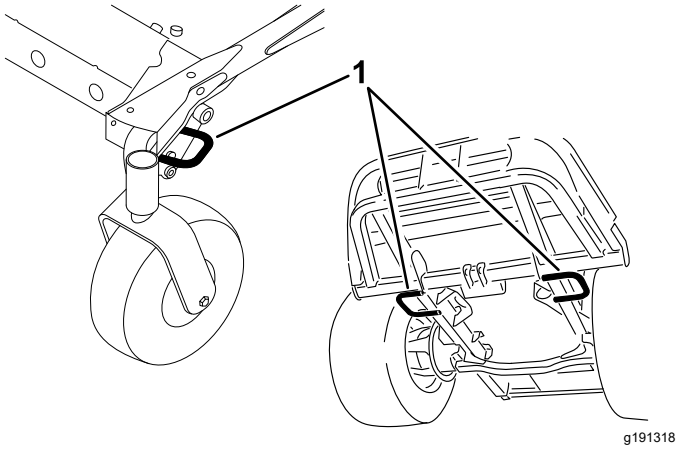

Figure 27

1. Traction unit tie-down loops

Loading the Machine

Use extreme caution when loading or unloading machines onto a trailer or a truck. Use a full-width ramp that is wider than the machine for this procedure. Drive the machine up ramps in reverse and drive it down ramps in a forward direction (Figure 28).

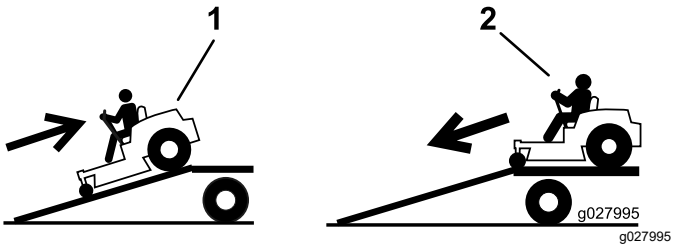

Figure 28

1. Drive the machine up the ramp in reverse.
2. Drive the machine forward down the ramp.

Important: **Do not use narrow individual ramps for each side of the machine.**

⚠ WARNING

Loading the machine onto a trailer or truck increases the possibility of tipover and could cause serious injury or death.

- **Use extreme caution when operating a machine on a ramp.**
- **When loading or unloading the machine, use the seat belt and ensure that the roll bar is in the raised position. Ensure that the roll bar can clear the top of an enclosed trailer.**
- **Use only a full-width ramp; do not use individual ramps for each side of the machine.**
- **Do not exceed a 15° angle between the ramp and the ground, or between the ramp and the trailer or truck.**
- **Ensure that the ramp length is at least 4 times as long as the height of the trailer or truck bed to the ground. This ensures that the ramp angle does not exceed 15° on flat ground.**
- **Drive the machine up ramps in reverse and drive it down ramps in a forward direction.**
- **While driving the machine on a ramp, avoid sudden acceleration or deceleration, as this could cause a loss of control or a tipover situation.**

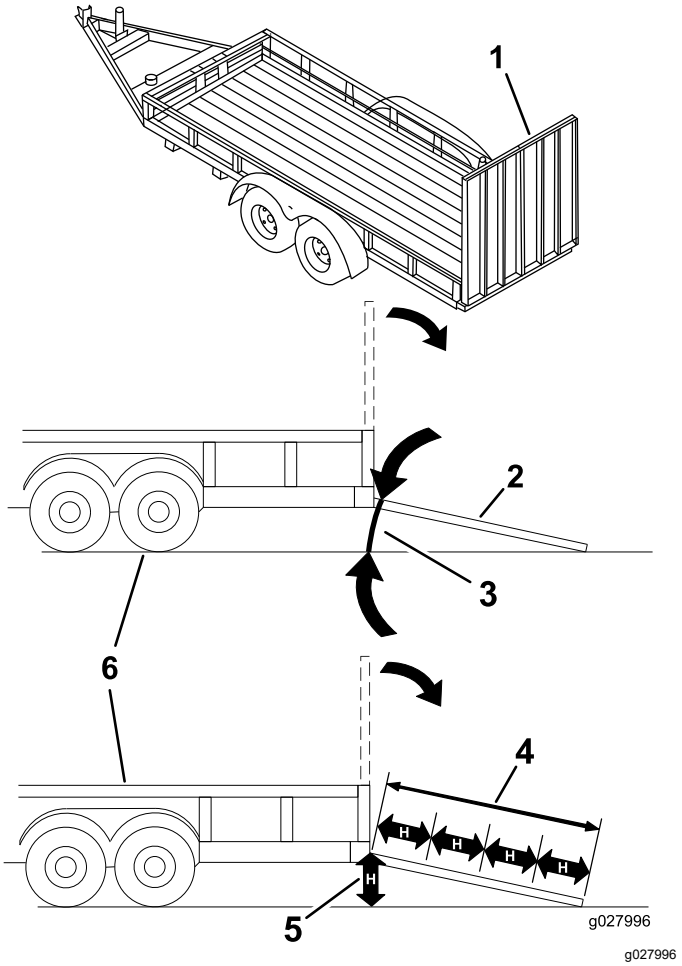

Figure 29

1. Full-width ramp in stowed position
2. Side view of full-width ramp in loading position
3. Not greater than 15°
4. Ramp is at least 4 times as long as the height of the trailer or truck bed to the ground
5. “H” indicates the height of the trailer or truck bed to the ground.
6. Trailer

Maintenance

Note: Determine the left and right sides of the machine from the normal operating position.

Maintenance Safety

- Before you leave the operator's position, do the following:
  - Park the machine on a level surface.
  - Disengage the power takeoff and lower the attachments.
  - Engage the parking brake.
  - Shut off the engine and remove the key (if equipped).
  - Wait for all movement to stop.
- Allow machine components to cool before performing maintenance.
- If the cutting units are in the transport position, use the positive mechanical lock (if equipped) before you leave the machine unattended.
- If possible, do not perform maintenance while the engine is running. Keep away from moving parts.
- Support the machine with jack stands whenever you work under the machine.
- Carefully release pressure from components with stored energy.
- Keep all parts of the machine in good working condition and all hardware tightened, especially blade-attachment hardware.
- Replace all worn or damaged decals.
- To ensure safe, optimal performance of the machine, use only genuine Toro replacement parts. Replacement parts made by other manufacturers could be dangerous, and such use could void the product warranty.

Recommended Maintenance Schedule(s)

Maintenance Service Interval	Maintenance Procedure
After the first 10 hours	• Torque the frame-mounting bolts. • Torque the wheel lug nuts.
After the first 50 hours	• Change the cutting-unit gearbox lubricant. • Change the engine oil and filter.
After the first 200 hours	• Change the hydraulic fluid and filter.
Before each use or daily	• Test the safety-interlock system. • Check the engine oil level. • Check the engine coolant level. • Clean the radiator with compressed air (more often in dirty and dusty conditions). • Check the hydraulic fluid level. • Clean the cutting unit and machine. • Clean the machine. • Clean and maintain the seatbelt.
Every 50 hours	• Grease the bearing and bushing grease fittings (more often in dirty or dusty conditions and after every washing). • Check battery cable connections. • Check the tire pressure.
Every 100 hours	• Check the alternator-belt tension.
Every 150 hours	• Check the lubricant in the cutting-unit gearbox. • Change the engine oil and filter.
Every 200 hours	• Inspect the cooling-system hoses and seals. Replace them if cracked or torn. • Torque the wheel lug nuts.

Maintenance Service Interval	Maintenance Procedure
Every 400 hours	• Change the cutting-unit gearbox lubricant. • Service the air-cleaner filter. —service the filter also when the air-cleaner indicator shows red; service the air-cleaner filter more frequently in extremely dusty or dirty conditions. • Service the air cleaner. • Replace the fuel-filter canister for the water separator. • Drain water or other contaminants from the water separator. • Inspect the fuel lines and connections.
Every 800 hours	• Drain and clean the fuel tank. • Change the hydraulic fluid and filter. • Inspect the engine-valve clearance. Refer to your engine owner's manual.
Every 1,500 hours	• Replace moving hoses.
Before storage	• Drain and clean the fuel tank.
Every 2 years	• Flush and replace the cooling-system fluid.

Important: **Refer to your engine owner's manual for additional maintenance procedures.**

Note: Download a free copy of the electrical or hydraulic schematic by visiting www.Toro.com and searching for your machine from the Manuals link on the home page.

Important: **The fasteners on the covers of this machine are designed to remain on the cover after removal. Loosen all the fasteners on each cover a few turns so that the cover is loose but still attached, then go back and loosen them until the cover comes free. This prevents you from accidentally stripping the bolts free of the retainers.**

Daily Maintenance Checklist

Duplicate this page for routine use.

Maintenance Check Item	For the week of:						
	Mon.	Tues.	Wed.	Thurs.	Fri.	Sat.	Sun.
Check the safety-interlock operation.							
Check the grass deflector in the down position (if applicable).							
Check the parking-brake operation.							
Check the fuel level.							
Check the hydraulic fluid level.							
Check the engine-oil level.							
Check the cooling-system fluid level.							
Check the drain water/fuel separator.							
Check the air-filter restriction indicator.[1]							
Check the radiator and screen for debris							
Check for unusual engine noises.[2]							
Check for unusual operating noises.							
Check the hydraulic hoses for damage							
Check for fluid leaks.							
Check the tire pressure.							
Check the instrument operation.							
Check the condition of the blades.							
Lubricate all grease fittings.[3]							
Clean the machine							
Touch up damaged paint.							

1. If the indicator shows red
2. Check glow plug and injector nozzles if you notice hard starting, excess smoke, or rough running.
3. Immediately after every washing, regardless of the interval listed.

Notation for areas of concern		
Inspection performed by:		
Item	Date	Information

⚠ CAUTION

If you leave the key in the ignition switch, someone could accidently start the engine and seriously injure you or other bystanders.

Remove the key from the ignition before you do any maintenance.

Lubrication

Greasing the Bearings and Bushings

Service Interval: Every 50 hours (more often in dirty or dusty conditions and after every washing).

The machine has grease fittings that you must lubricate regularly with No. 2 lithium grease. Lubricate more often in dirty or dusty conditions because dirt can get into the bearings and bushings and cause accelerated wear.

1. Wipe the grease fittings clean so that foreign matter cannot be forced into the bearing or bushing.
2. Pump grease into the fittings.
3. Wipe off excess grease.

Note: Improper wash-down procedures can negatively affect bearing life. Do not wash down the machine when it is still hot and avoid directing high-pressure or high-volume spray at the bearings or seals.

Servicing the Cutting-Unit Gearbox Lubricant

The gear box is designed to operate with SAE EP90W gear lube. Although the gearbox comes from the factory with lubricant, check the level of the lubricant in the cutting unit before operating it and as recommended in the Daily Maintenance Checklist (page 36).

Checking the Cutting-Unit Gearbox Lubricant

Service Interval: Every 150 hours

1. Position the machine and cutting unit on a level surface.
2. Lower the cutting unit to the 2.5 cm (1 inch) height of cut.
3. Disengage the PTO, move the motion-control levers to the NEUTRAL-LOCK position, and engage the parking brake.
4. Move the throttle lever to the SLOW position, shut off the engine, remove the key, and wait for all moving parts to stop before leaving the operating position.
5. Lift the footrest, exposing the top of the cutting unit.
6. Remove the dipstick/fill plug from the top of the gearbox and make sure that the lubricant is between the marks on the dipstick (Figure 30).

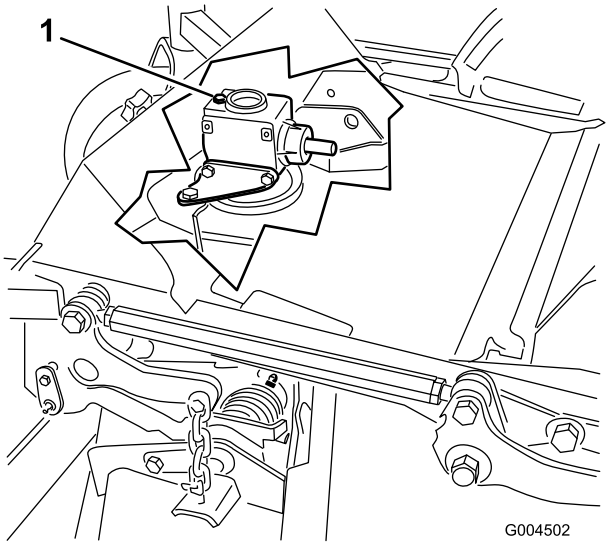

Figure 30

1. Fill plug and dipstick

7. If the lubricant level is low, add enough lubricant until the level is between the marks on the dipstick.

   Important: **Do not overfill the gearbox; overfilling the gearbox may damage it.**

Changing the Cutting-Unit Gearbox Lubricant

Service Interval: After the first 50 hours

Every 400 hours

1. Position the machine and cutting unit on a level surface.
2. Lower the cutting unit to the 2.5 cm (1 inch) height of cut.
3. Disengage the PTO, move the motion-control levers to the NEUTRAL-LOCK position, and engage the parking brake.
4. Move the throttle lever to the SLOW position, shut off the engine, remove the key, and wait for all moving parts to stop before leaving the operating position.
5. Lift the footrest, exposing the top of the cutting unit.
6. Remove the dipstick/fill plug from the top of the gearbox (Figure 30).
7. Place a funnel and drain pan under the drain plug located under the front of the gearbox and remove the plug, draining the lubricant into the pan.
8. Replace the drain plug.
9. Add enough lubricant, approximately 283 ml (12 fl oz), until the level is between the marks on the dipstick.

Important: **Do not overfill the gearbox; overfilling the gearbox may damage it.**

Engine Maintenance

Engine Safety

- Shut off the engine and remove the key before checking the oil or adding oil to the crankcase.
- Do not change the governor speed or overspeed the engine.

Checking the Air Cleaner

Service Interval: Every 400 hours —service the filter also when the air-cleaner indicator shows red; service the air-cleaner filter more frequently in extremely dusty or dirty conditions.

1. Check the air-cleaner body for damage, which could possibly cause an air leak. Replace a damaged air-cleaner body.
2. Check the air-intake system for leaks, damage, or loose hose clamps.
3. Service the air-cleaner filter (Figure 31).

   Important: **Do not over-service the air filter.**

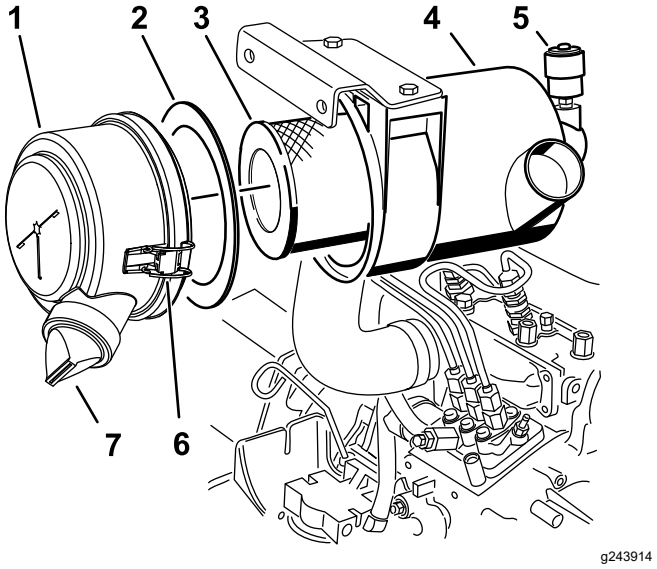

Figure 31

1. Air-cleaner cover
2. Gasket
3. Filter
4. Air-cleaner body
5. Air-cleaner indicator
6. Air-cleaner latch
7. Rubber outlet valve

4. Ensure that the cover is seated correctly and seals with the air-cleaner body.

Servicing the Air Cleaner

Service Interval: Every 400 hours

Note: If the foam gasket in the cover is damaged, replace it.

Important: **Avoid using high-pressure air, which could force dirt through the filter into the intake tract.**

Important: **Do not clean the used filter to avoid damage to the filter media.**

Important: **Do not use a damaged filter.**

Important: **Do not apply pressure to the flexible center of the filter.**

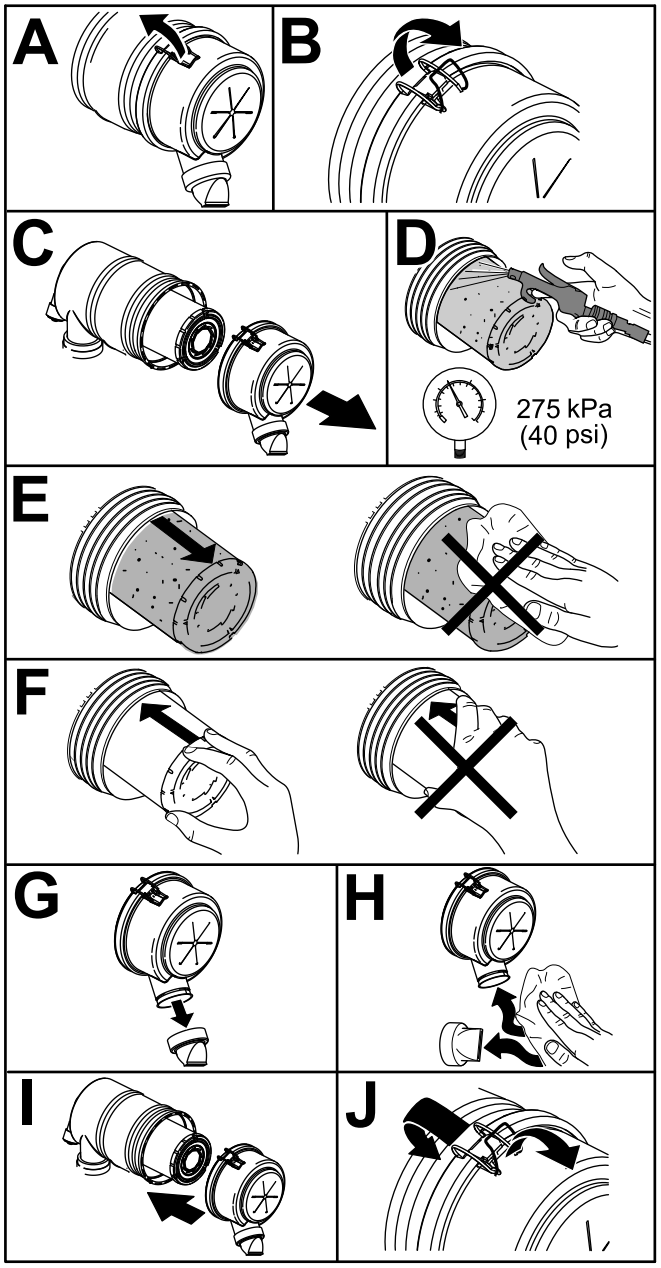

g243913

Figure 32

Servicing the Engine-Oil

Checking the Engine-Oil Level

Service Interval: Before each use or daily

The engine is shipped with oil in the crankcase; however, check the oil level before and after you first start the engine. Check the oil level before operating the machine each day or each time you use the machine.

The crankcase capacity is approximately 3.8 L(4 quarts) with the filter. Use high-quality engine oil that meets the following specifications:

- API Classification Level Required: CH-4, CI-4 or higher.
- Preferred oil: SAE 15W-40 (above 0°F (-17°C)
- Alternate oil: SAE 10W-30 or 5W-30 (all temperatures)

Note: Toro Premium Engine oil is available from your distributor in either 15W-40 or 10W-30 viscosity. See the parts catalog for part numbers.

1. Park the machine on a level surface, lower the cutting unit, move the throttle lever to the SLOW position, shut off the engine, and remove the key from the ignition switch.
2. Open the hood.
3. Remove the dipstick, wipe it clean, install the dipstick into the tube, and pull it out again.
4. Check the engine-oil level.

   If the oil is between the marks on the dipstick (F of Figure 33), the engine oil is at a sufficient level. If the oil is below the lower mark on the dipstick (B of Figure 33), add more oil until the oil level is between the marks on the dipstick.

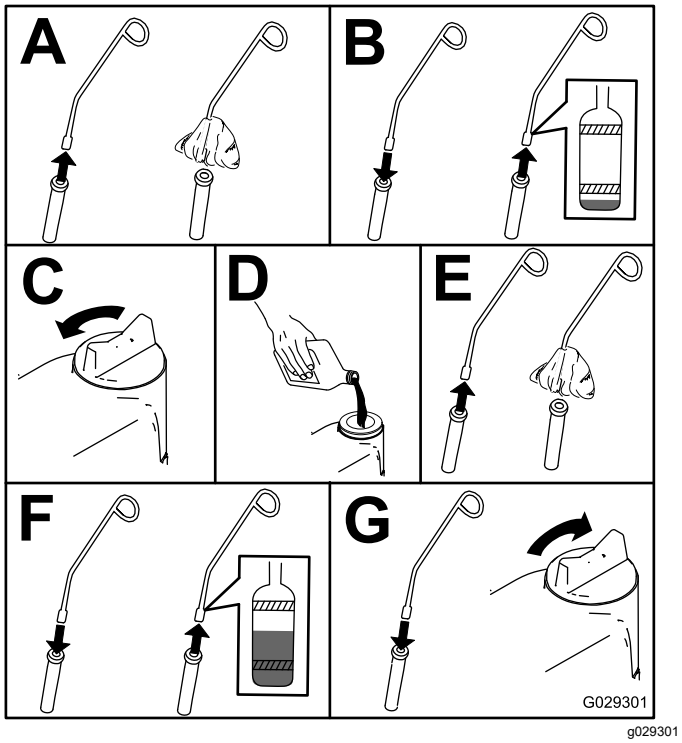

g029301

Figure 33

Changing the Engine Oil And Filter

Service Interval: After the first 50 hours

Every 150 hours

If possible, run the engine just before changing the oil because warm oil flows better and carries more contaminants than cold oil.

1. Position the machine on a level surface.
2. Open the hood.
3. Change the oil (Figure 34).

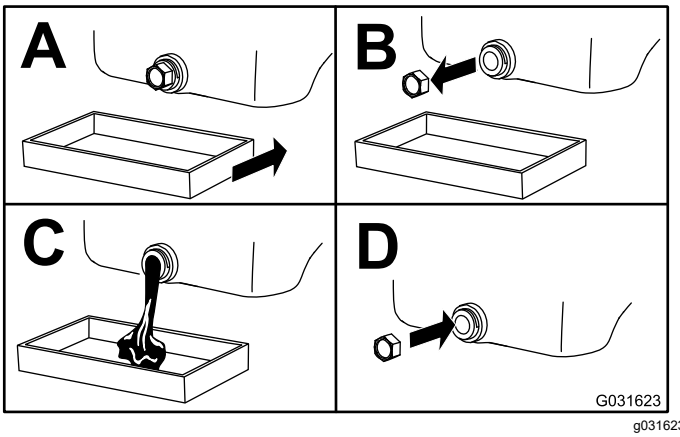

g031623

Figure 34

4. Replace the oil filter (Figure 35).

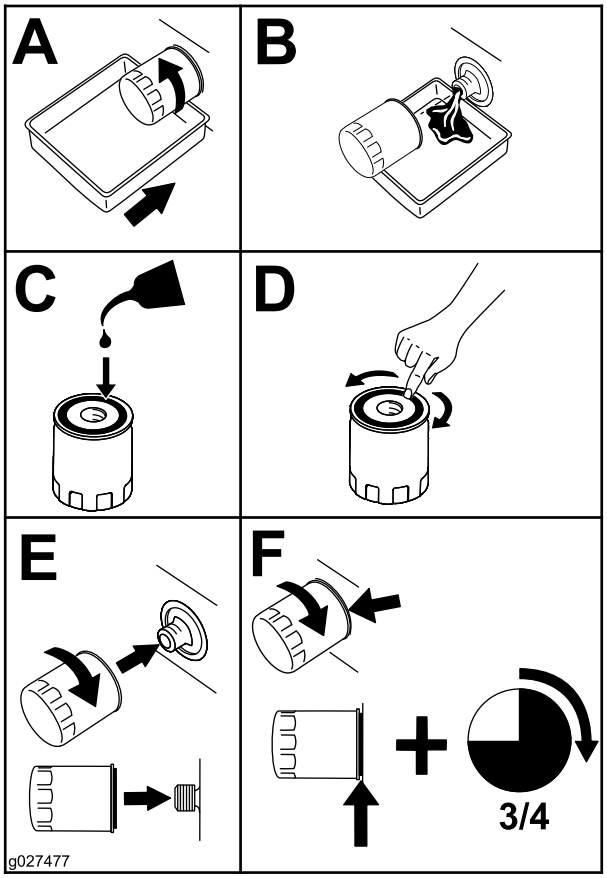

g027477

Figure 35

5. Fill the crankcase with oil; refer to Checking the Engine-Oil Level (page 39).

Fuel System Maintenance

⚠ DANGER

Under certain conditions, diesel fuel and fuel vapors are highly flammable and explosive. A fire or explosion from fuel can burn you and others and can cause property damage.

- **Use a funnel and fill the fuel tank outdoors, in an open area, when the engine is off and is cold. Wipe up any fuel that spills.**
- **Do not fill the fuel tank completely full. Add fuel to the fuel tank until the level is to the bottom of the filler neck.**
- **Never smoke when handling fuel, and stay away from an open flame or where fuel fumes may be ignited by a spark.**
- **Store fuel in a clean, safety-approved container and keep the cap in place.**

Servicing the Water Separator

Service Interval: Every 400 hours

Every 400 hours

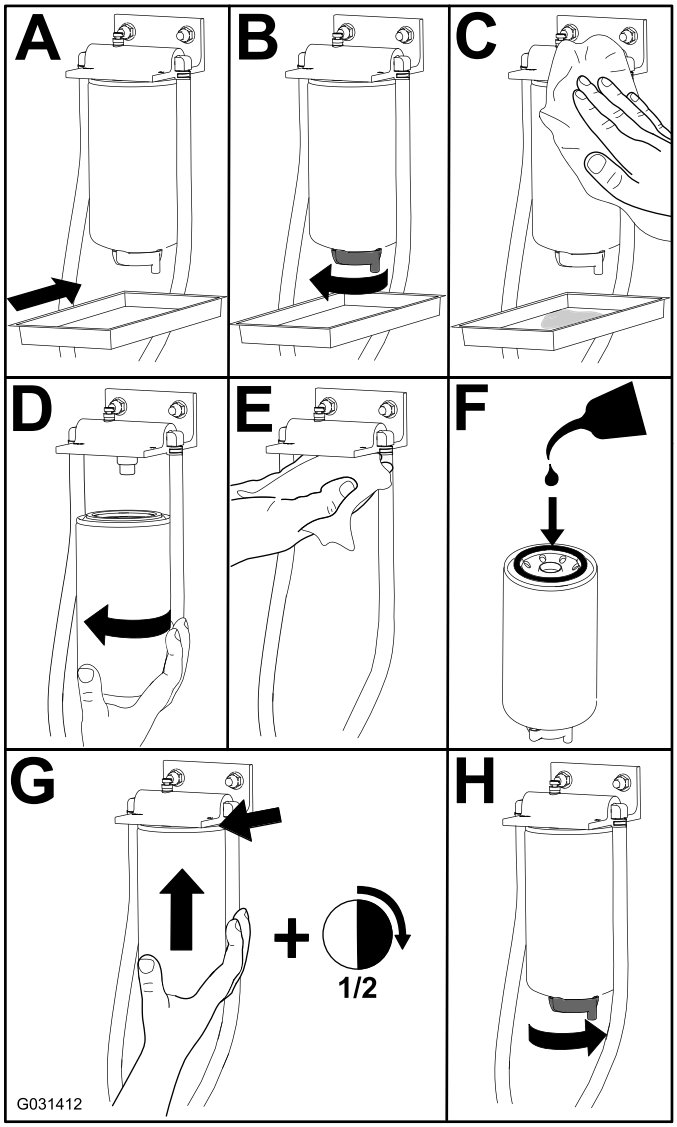

g031412

Figure 36

Draining the Fuel Tank

Service Interval: Every 800 hours—Drain and clean the fuel tank.

Before storage—Drain and clean the fuel tank.

In addition to the listed service interval, drain and clean the tank if the fuel system becomes contaminated or if you are storing the machine for an extended period. Use clean fuel to flush out the tank.

Inspecting the Fuel Lines and Connections

Service Interval: Every 400 hours/Yearly (whichever comes first)

Inspect the fuel lines for deterioration, damage, or loose connections.

Bleeding the Fuel System

1. Park the machine on a level surface. Ensure that the fuel tank is at least half full.
2. Unlatch and raise the hood.
3. Place a rag under the air-bleed screw on the fuel-injection pump and open it (Figure 37).

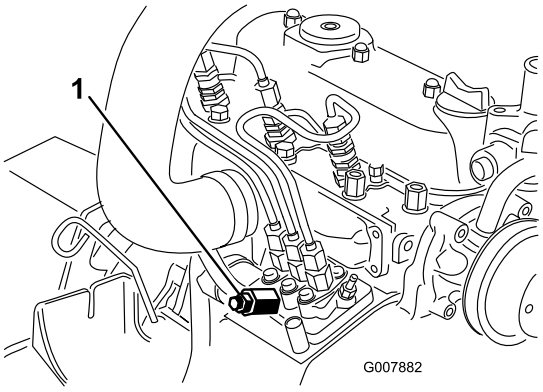

g007882

Figure 37

1. Fuel-injection-pump bleed screw

4. Turn the ignition key to the ON position.

   Note: The electric fuel pump begins operation, thereby forcing air out at the air-bleed screw.

   ⚠ CAUTION

   The engine may start during this procedure. Moving fans and belts in a running engine can severely injure you or bystanders.

   Keep hands, fingers, loose clothing/jewelry, and hair away from the engine fan and belt during this procedure.

5. Leave the key in the ON position until a solid stream of fuel flows out around the screw.
6. Tighten the screw and turn the key to the OFF position.

   Note: Normally, the engine should start after you bleed the fuel system. However, if the engine does not start, air may be trapped between injection pump and injectors; refer to Bleeding Air from the Injectors (page 42).

Bleeding Air from the Injectors

Note: Use this procedure only if you purged the fuel system through normal priming procedures and the engine does not start; refer to Bleeding the Fuel System (page 42).

1. Place a rag under the pipe connection coming from the injection pump to the No. 1 injector nozzle as illustrated in Figure 38.

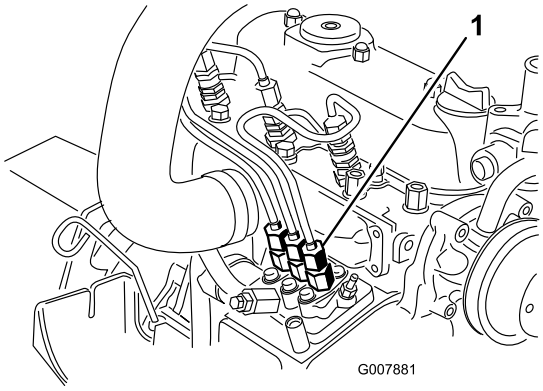

g007881

Figure 38

1. Pipe connection from the injection pump to the No. 1 injector nozzle

2. Move the throttle to the FAST position.
3. Turn the ignition key to the START position and watch the fuel flow around the connector.

   ⚠ CAUTION

   The engine may start during this procedure. Moving fans and belts in a running engine can severely injure you or bystanders.

   Keep hands, fingers, loose clothing/jewelry, and hair away from the engine fan and belt during this procedure.

4. Tighten the pipe connector securely when it attains a solid flow.
5. Turn the key to the OFF position.
6. Repeat this procedure for the remaining nozzles.

Electrical System Maintenance

Electrical System Safety

- Disconnect the battery before repairing the machine. Disconnect the negative terminal first and the positive last. Connect the positive terminal first and the negative last.
- Charge the battery in an open, well-ventilated area, away from sparks and flames. Unplug the charger before connecting or disconnecting the battery. Wear protective clothing and use insulated tools.

Servicing the Battery

Service Interval: Every 50 hours

Keep the top of the battery clean. If you store the machine in a location where temperatures are extremely high, the battery will run down more rapidly than if the machine is stored in a location where the temperature is cool.

Keep the top of the battery clean by washing it periodically with a brush dipped in ammonia or bicarbonate of soda solution. Flush the top surface with water after cleaning it. Do not remove the fill caps while cleaning the battery.

The battery cables must be tight on the terminals to provide good electrical contact.

If corrosion occurs at the terminals, disconnect the cables, negative (-) cable first, and scrape the clamps and terminals separately. Connect the cables, positive (+) cable first, and coat the terminals with petroleum jelly.

⚠ WARNING

Battery terminals or metal tools could short against metal machine components causing sparks. Sparks can cause the battery gasses to explode, resulting in personal injury.

- **When removing or installing the battery, do not allow the battery terminals to touch any metal parts of the machine.**
- **Do not allow metal tools to short between the battery terminals and metal parts of the machine.**

⚠ WARNING

Incorrect battery cable routing could damage the machine and cables causing sparks. Sparks can cause the battery gasses to explode, resulting in personal injury.

- **Always disconnect the negative (black) battery cable before disconnecting the positive (red) cable.**
- **Always connect the positive (red) battery cable before connecting the negative (black) cable.**

Storing the Battery

If you are storing the machine more than 30 days, remove the battery and charge it fully. Either store it on a shelf or on the machine. Do not connect the cables if you store it on the machine. Store the battery in a cool environment to prevent the battery from discharging rapidly. To prevent the battery from freezing, make sure it is fully charged. The specific gravity of a fully charged battery is 1.265 to 1.299.

Checking the Fuses

The fuses are located under the control panel. Access them through the side panel cover (Figure 39). To open the side panel cover, release the 2 latches and pull out on it.

If the machine stops or has other electrical system issues, check the fuses. Grasp each fuse in turn and remove them 1 at a time, checking if any are blown.

Important: **If you need to replace a fuse, always use the same type and amperage-rated fuse as the one you are replacing, otherwise you could damage the electrical system. Refer to the decal next to the fuses for a diagram of each fuse and its amperage (Figure 40).**

Note: If a fuse blows frequently, you may have a short in the electrical system and should have it serviced by a qualified service technician.

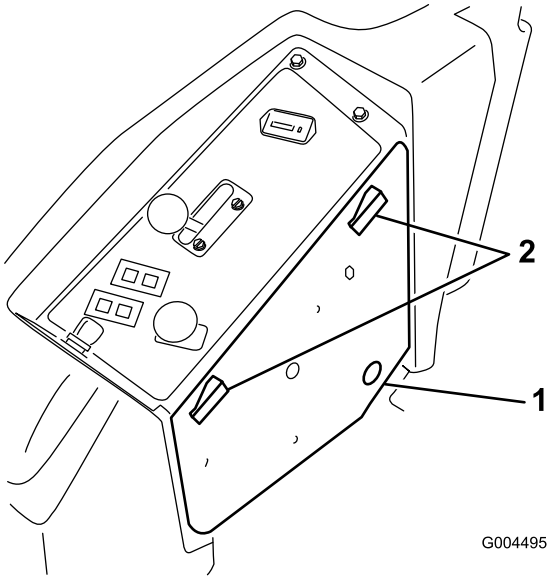

Figure 39

1. Side panel cover
2. Latch

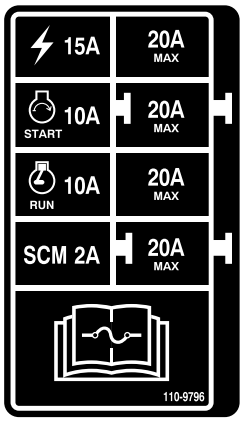

Figure 40

Drive System Maintenance

Checking the Tire Pressure

Service Interval: Every 50 hours

Check the pressure after every 50 operating hours or monthly, whichever occurs first (Figure 41).

Maintain the air pressure in the front and rear tires. The correct air pressure is 124 kPa (15 psi) in the rear tires and 103 kPa (25 psi) in the caster wheels. Uneven tire pressure can cause an uneven cut. Check the tires when they are cold to get the most accurate pressure reading.

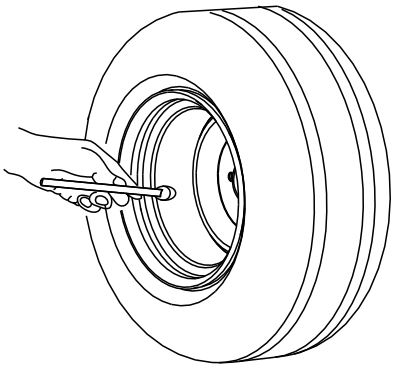

Figure 41

Replacing the Caster Wheels and Bearings

1. Obtain a new caster-wheel assembly, cone bearings, and bearing seals from your Authorized Toro Distributor.
2. Remove the locknut from the bolt (Figure 42).

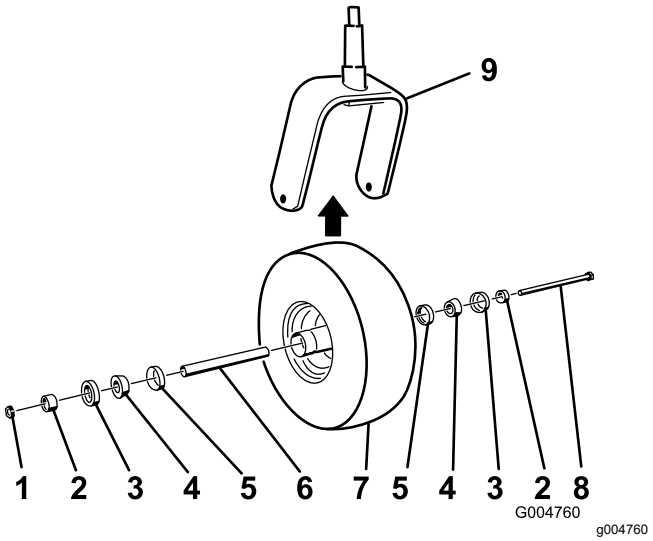

Figure 42

1. Locknut
2. Bearing spacer
3. Outer bearing seal
4. Cone bearing
5. Inner bearing seal
6. Spacer
7. Caster wheel
8. Axle bolt
9. Caster fork

3. Grasp the caster wheel and slide the bolt out of the fork or pivot arm.
4. Discard the old caster wheel and bearings.
5. Assemble the caster wheel by pushing the cone bearings and seals, packed with grease, into the wheel hub, positioned as shown in Figure 42.
6. Slide the spacer into the wheel hub through the bearings, captivating the spacer inside the wheel hub with 2 bearing spacers.

   Important: **Ensure that the seal lips are not folded inward.**
7. Install the caster-wheel assembly between the castor fork and secure it in place with the bolt and locknut.
8. Tighten the locknut until the wheel no longer spins freely, then back it off just until the wheel spins freely.
9. Attach a grease gun to the grease fitting on the caster wheel and fill it with No. 2 lithium grease.

Cooling System Maintenance

Cooling System Safety

- Swallowing engine coolant can cause poisoning; keep out of reach from children and pets.
- Discharge of hot, pressurized coolant or touching a hot radiator and surrounding parts can cause severe burns.
  - Always allow the engine to cool at least 15 minutes before removing the radiator cap.
  - Use a rag when opening the radiator cap, and open the cap slowly to allow steam to escape.
- Do not operate the machine without the covers in place.
- Keep your fingers, hands, and clothing clear of rotating fan and drive belt.

Coolant Specification

The coolant reservoir is filled at the factory with a 50/50 solution of water and ethylene glycol base extended-life coolant.

Important: **Use only commercially available coolants that meet the specifications listed in the Extended Life Coolant Standards Table.**

Do not use conventional (green) inorganic-acid technology (IAT) coolant in your machine. Do not mix conventional coolant with extended-life coolant.

Coolant Type Table

Ethylene-Glycol Coolant Type	Corrosion Inhibitor Type
Extended-life antifreeze	Organic-acid technology (OAT)
Important: **Do not rely on the color of the coolant to identify the difference between conventional (green) inorganic-acid technology (IAT) coolant and extended-life coolant.** **Coolant manufacturers may dye extended-life coolant in one of the following colors: red, pink, orange, yellow, blue, teal, violet, and green. Use coolant that meets the specifications in the Extended Life Coolant Standards Table.**	

Extended Life Coolant Standards

ATSM International	SAE International
D3306 and D4985	J1034, J814, and 1941

Important: **Coolant concentration should be a 50/50 mixture of coolant to water.**

- **Preferred:** When mixing coolant from a concentrate, mix it with distilled water.
- **Preferred option:** If distilled water is not available, use a pre-mix coolant instead of a concentrate.
- **Minimum requirement:** If distilled water and pre-mix coolant are not available, mix concentrated coolant with clean drinkable water.

Checking the Cooling System

Service Interval: Before each use or daily

The cooling system is filled with a 50/50 solution of water and permanent ethylene glycol anti freeze. The capacity of the cooling system is 7.5 L (6 US qt).

1. Check the level of the coolant in the expansion tank (Figure 43).

   Note: The coolant level should be between the marks on the side of the tank.

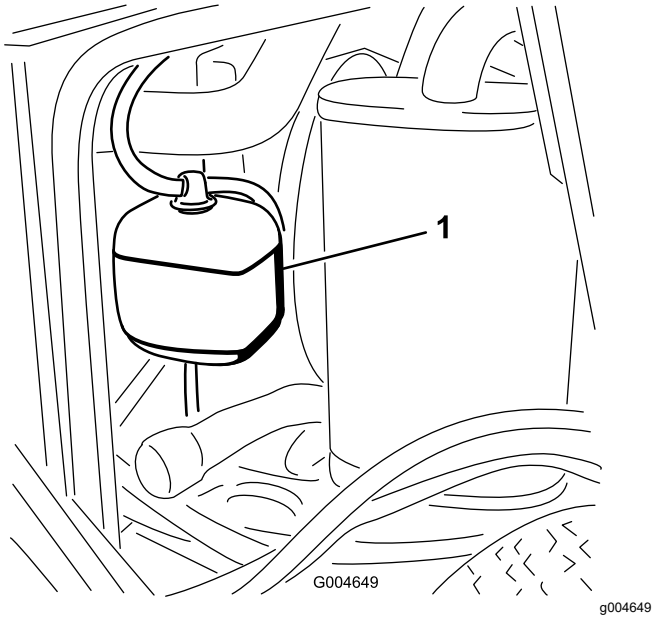

Figure 43

1. Expansion tank

2. If coolant level is low, remove the expansion-tank cap and replenish the system.

   Important: **Do not overfill.**

3. Install the expansion-tank cap.

Cleaning the Radiator

Service Interval: Before each use or daily

Every 1,500 hours—Replace moving hoses.

Every 200 hours—Inspect the cooling-system hoses and seals. Replace them if cracked or torn.

Every 2 years—Flush and replace the cooling-system fluid.

Clean the radiator to prevent the engine from overheating.

Note: If the cutting unit or engine shuts off due to overheating, check the radiator for excessive buildup of debris.

Clean the radiator as follows:

1. Open the hood.
2. Working from the fan side of the radiator, blow out debris with low pressure (345 kPa or 50 psi), compressed air. Repeat from the front of the radiator and the other fan side.

   Important: **Do not use water.**
3. After you thoroughly clean the radiator, clean out debris that may have collected in the channel at the radiator base.
4. Close the hood.

Brake Maintenance

Adjusting the Parking-Brake Interlock Switch

1. Stop the machine, move the motion-control levers to the NEUTRAL-LOCK position, engage the parking brake, and remove the ignition key.
2. Remove the bolts securing the front panel and remove the panel (Figure 44).

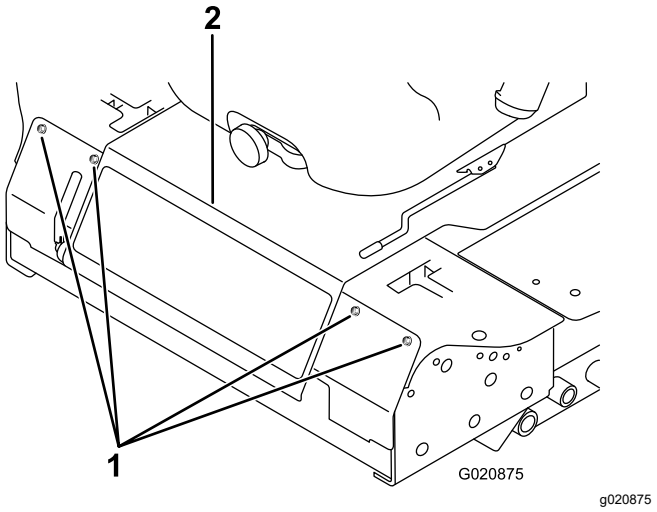

Figure 44

1. Bolt
2. Control panel

3. Loosen the 2 jam nuts securing the parking-brake interlock switch to the mounting bracket.

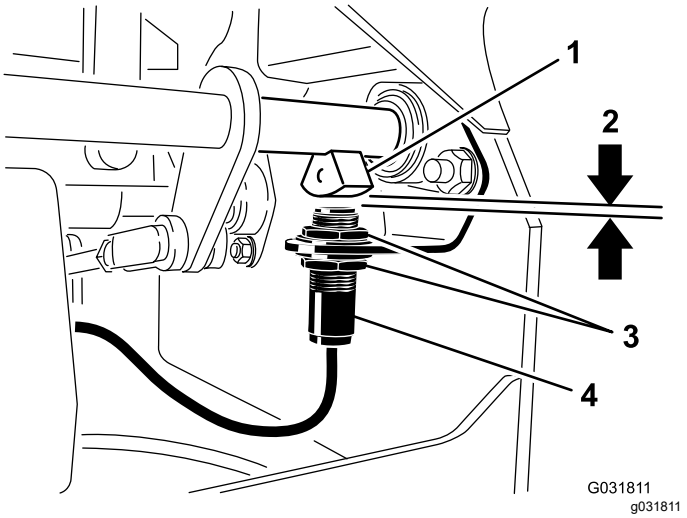

Figure 45

1. Brake-shaft sensor
2. 4 mm (5/32 inch)
3. Jam nut
4. Parking-brake interlock switch

4. Move the switch up or down on the bracket until the distance between the brake-shaft sensor and the switch plunger is 4 mm (5/32 inch) as shown in Figure 45.

   Note: Make sure that the brake-shaft sensor does not contact the switch plunger.

5. Secure the switch jam nuts.
6. Test the adjustment as follows:
   A. Ensure that the parking brake is engaged and you are not sitting on the seat, then start the engine.
   B. Move the control levers out of the NEUTRAL-LOCK position.

      Note: The engine should shut off. If not, check the adjustment that you made to the switch.
7. Install the front panel.

Belt Maintenance

Checking the Alternator-Belt Tension

Service Interval: Every 100 hours

1. Apply 44 N (10 lb) of force to the alternator belt, midway between the pulleys.
2. If the deflection is not 10 mm (3/8 inch), loosen the alternator mounting bolts (Figure 46).

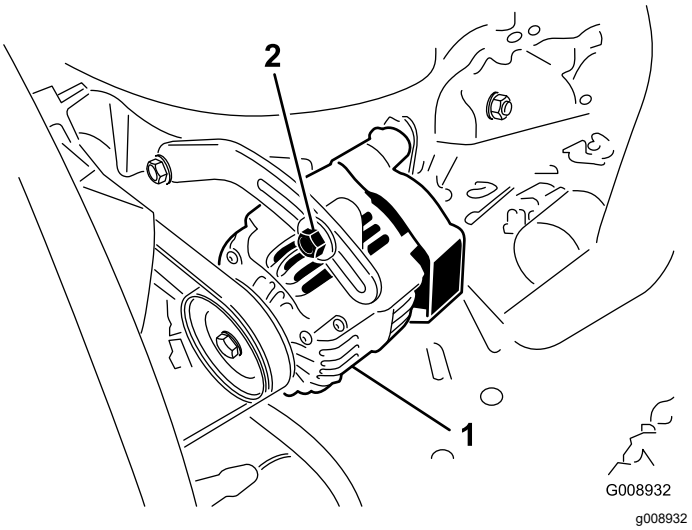

Figure 46

1. Mounting bolt
2. Alternator

3. Increase or decrease the alternator-belt tension.
4. Tighten the mounting bolts.
5. Check the deflection of the belt again to ensure that the tension is correct.

Adjusting the Control-Lever Neutral-Interlock Switch

1. Stop the machine, move the motion-control levers to the NEUTRAL-LOCK position, engage the parking brake, and remove the ignition key.
2. Remove the bolts securing the front panel and remove the panel (Figure 47).

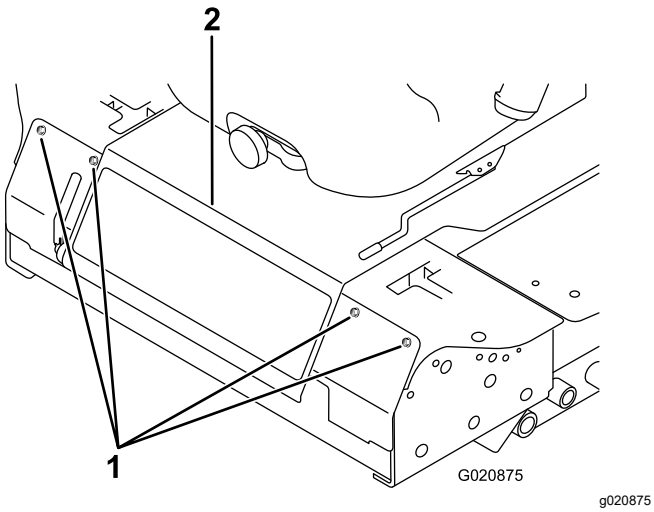

Figure 47

1. Bolt
2. Control panel

3. Loosen the 2 screws securing the interlock switch (Figure 48).

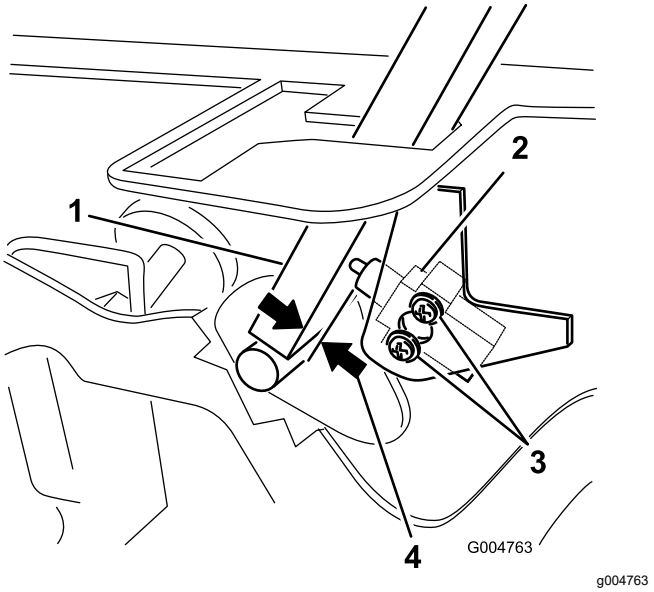

Figure 48

1. Control lever
2. Neutral-interlock switch
3. Screw
4. 0.4 to 1 mm (0.015 to 0.045 inch)

4. Holding the control lever against the frame, move the switch toward the lever until the distance between the lever and switch body is 0.4 to 1 mm (0.015 to 0.045 inch) as shown in Figure 48.
5. Secure the switch.
6. Repeat steps 3 to 5 for the other lever.
7. Install the front panel.

Adjusting the Control-Lever Neutral Return

If the motion-control levers do not align with the neutral slots when released from the REVERSE position, adjustment is required. Adjust each lever, spring, and rod separately.

1. Disengage the PTO, move the control lever to the NEUTRAL-LOCK position, and engage the parking brake.
2. Move the throttle lever to the SLOW position, shut off the engine, remove the key, and wait for all moving parts to stop before leaving the operating position.
3. Remove the bolts securing the front panel and remove the panel (Figure 49).

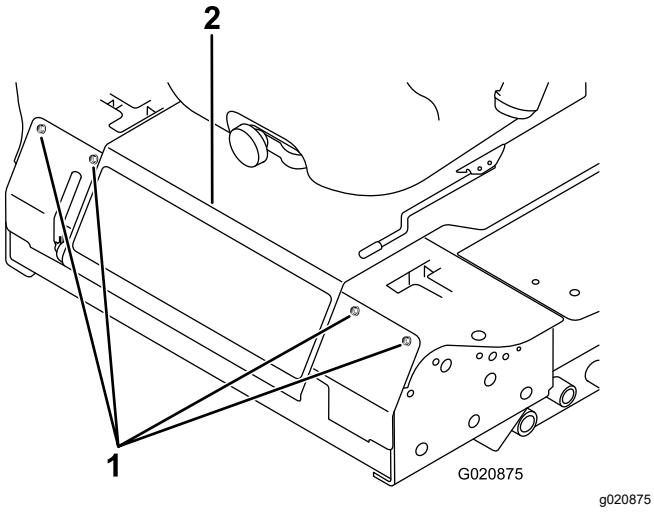

Figure 49

1. Bolt
2. Control panel

4. Move the control lever to the NEUTRAL position but **not locked** (Figure 51).
5. Pull the lever back until the clevis pin (on an arm above the pivot shaft) contacts the end of the slot (just beginning to put pressure on the spring) as shown in Figure 50.

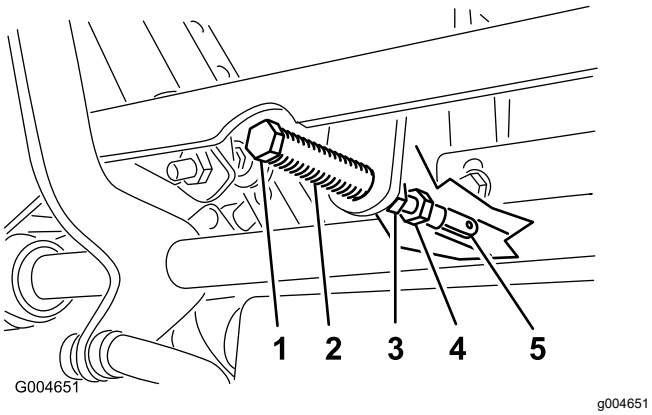

Figure 50

1. Clevis pin
2. Slot
3. Jam nut
4. Adjustment bolt
5. Yoke

6. Check where the control lever is relative to notch in the console (Figure 51).

   Note: The control lever should be centered, allowing lever to pivot outward to the NEUTRAL-LOCK position.

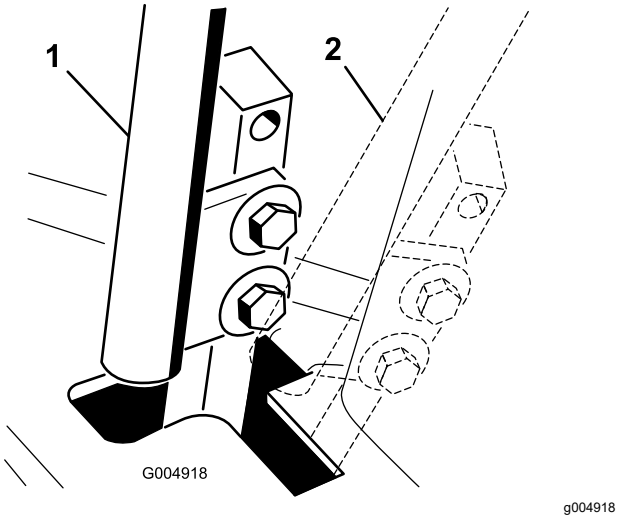

Figure 51

1. NEUTRAL position
2. NEUTRAL-LOCK position

7. If adjustment is needed, loosen the nut and jam nut against the yoke (Figure 50).
8. Applying slight rearward pressure on the motion-control lever, turn the head of the adjustment bolt in the appropriate direction until the control lever is centered in the NEUTRAL-LOCK position (Figure 50).

   Note: Rearward pressure on the lever keeps the pin at the end of the slot and allow the adjustment bolt to move the lever to the appropriate position.
9. Tighten the nut and jam nut (Figure 50).
10. Repeat steps 4 through 9 for the other control lever.
11. Install the front panel.

Adjusting the Traction Drive for Neutral

Make this adjustment with the drive wheels turning.

⚠ DANGER

Mechanical or hydraulic jacks may fail to support the machine and cause a serious injury.

- **Use jack stands when supporting the machine.**
- **Do not use hydraulic jacks.**

⚠ WARNING

The engine must be running to perform this adjustment. Contact with moving parts or hot surfaces may cause personal injury.

Keep hands, feet, face, clothing, and other body parts away from rotating parts, muffler, and other hot surfaces.

1. Raise the frame onto stable jack stands so that the drive wheels can rotate freely.
2. Slide the seat forward, unlatch it, and swing it up and forward.
3. Disconnect the electrical connector from the seat safety switch.
4. Temporarily install a jumper wire across the terminals in the wire harness connector.
5. Start the engine, ensure that the throttle lever is midway between the FAST and SLOW positions, and release the parking brake.

   Note: The motion-control levers must be in the NEUTRAL-LOCK position while you make any adjustments.
6. Adjust the pump rod length on one side by rotating the hex shaft, in the appropriate direction, until the corresponding wheel is still or slightly creeping in reverse (Figure 52).

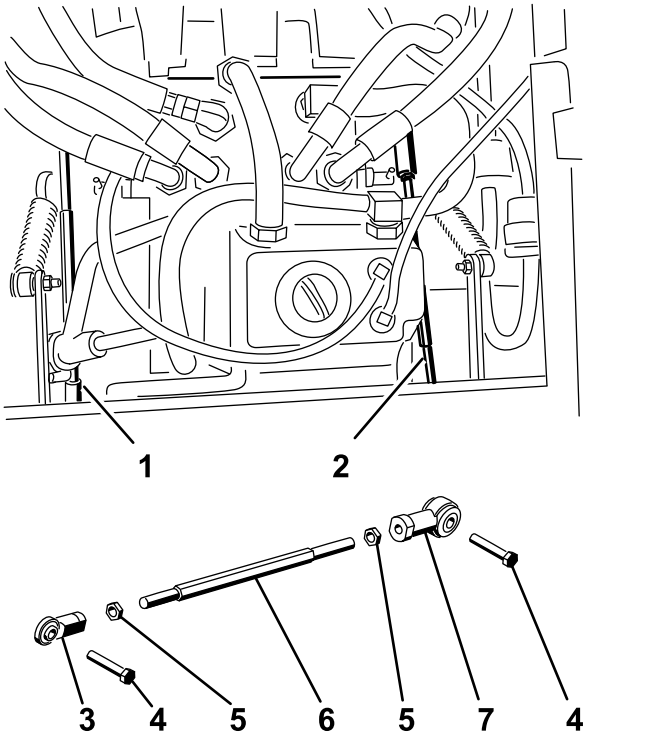

Figure 56
g004488

Figure 52

1. Right pump rod
2. Left pump rod
3. Ball joint
4. Bolt
5. Jam nut
6. Hex shaft
7. Ball joint

7. Move the motion-control lever forward and reverse, then back to neutral.

   Note: The wheel must stop turning or slightly creep in reverse.
8. Move the throttle lever to the FAST position.

   Note: Make sure that the wheel remains stopped or slightly creeps in reverse; adjust it if necessary.
9. Repeat steps 6 through 8 for the other side of the machine.
10. Tighten the jam nuts at the ball joints (Figure 50).
11. Move the throttle lever to the SLOW position and shut off the engine.
12. Remove the jumper wire from the wire harness connector and plug the connector into the seat switch.

⚠ WARNING

The electrical system does not perform proper safety shutoff with the jumper wire installed.

- **Remove the jumper wire from the wire harness connector and plug the connector into the seat switch when you complete adjustment.**
- **Never operate the machine with the jumper installed and the seat switch bypassed.**

13. Lower the seat into position.
14. Remove the jack stands.

Adjusting the Maximum Ground Speed

1. Disengage the PTO, move the motion-control levers to the NEUTRAL-LOCK position, and engage the parking brake.
2. Move the throttle lever to the SLOW position, shut off the engine, remove the key, and wait for all moving parts to stop before leaving the operating position.
3. Remove the bolts securing the front panel and remove the panel (Figure 53).

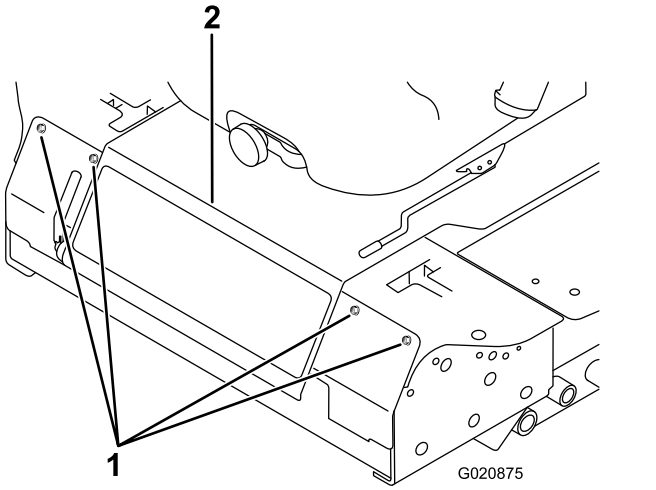

Figure 53

1. Bolt
2. Control panel

4. Loosen the jam nut on the stop bolt for a control lever (Figure 54).

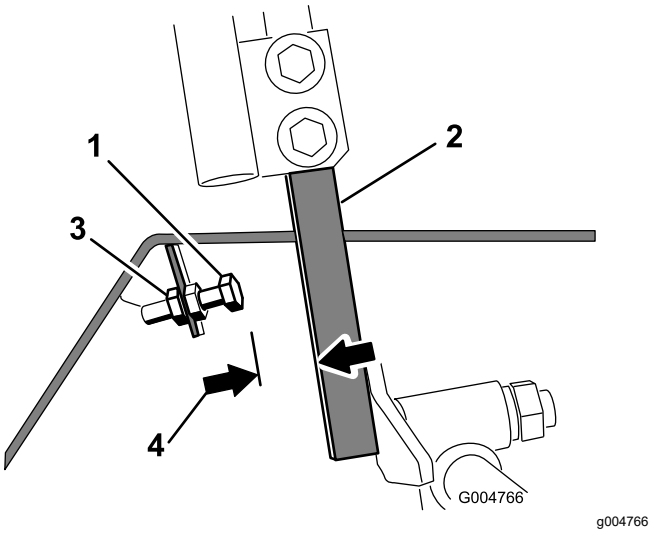

Figure 54

1. Stop bolt
2. Control lever
3. Jam nut
4. 1.5 mm (0.060 inch)

5. Thread the stop bolt all the way in (away from the control lever).
6. Push the control lever all the way forward until it stops and hold it there.
7. Thread the stop bolt out (toward the control lever) until there is a gap of 1.5 mm (0.060 inch) between the head of the stop bolt and the control lever.

   Note: If you want to reduce the maximum machine speed, back each stop bolt out an equal amount toward the control lever until you reach the desired maximum speed. You may need to test your adjustment several times.
8. Tighten the jam nut to secure the stop bolt in place.
9. Repeat steps 4 through 8 for the other control lever.
10. Install the front panel.
11. Ensure that the machine drives straight and does not turn when both control levers are pushed all the way forward.

    Note: If the machine turns, the stop bolts are not evenly set and you need to adjust them further.

Adjusting the Tracking

1. Disengage the PTO, move the motion-control levers to the NEUTRAL-LOCK position, and engage the parking brake.
2. Move the throttle lever to the SLOW position, shut off the engine, remove the key, and wait for all moving parts to stop before leaving the operating position.
3. Loosen the bolts securing the control levers (Figure 55).

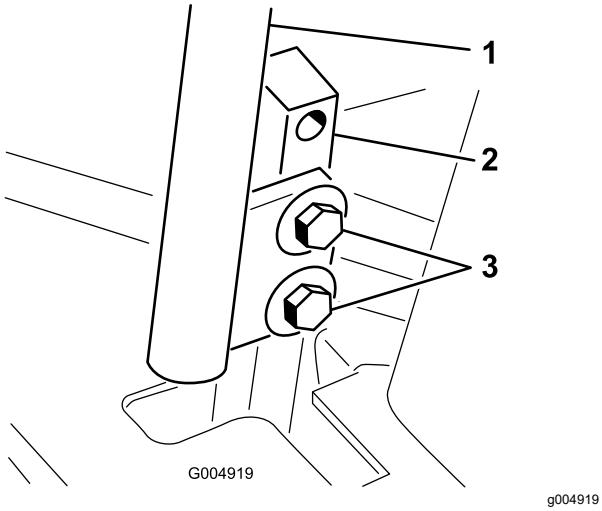

Figure 55

1. Control lever
2. Control-lever post
3. Bolts

4. Have someone push the control-lever posts (not the control levers) all the way forward into the maximum-speed position and hold them there.
5. Adjust the control levers so that they line up and tighten the bolts, securing the levers to the posts (Figure 56).

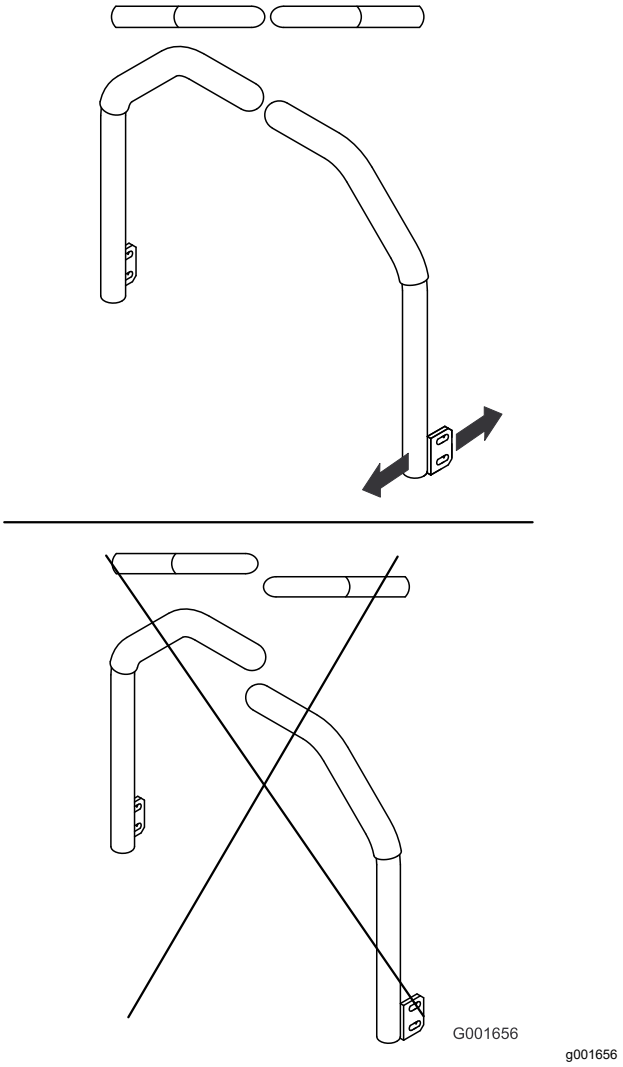

Figure 56

Hydraulic System Maintenance

Hydraulic System Safety

- Seek immediate medical attention if fluid is injected into skin. Injected fluid must be surgically removed within a few hours by a doctor.
- Ensure that all hydraulic-fluid hoses and lines are in good condition and all hydraulic connections and fittings are tight before applying pressure to the hydraulic system.
- Keep your body and hands away from pinhole leaks or nozzles that eject high-pressure hydraulic fluid.
- Use cardboard or paper to find hydraulic leaks.
- Safely relieve all pressure in the hydraulic system before performing any work on the hydraulic system.

Hydraulic Fluid Capacity

The reservoir is approximately 4.7 liters (5 quarts).

Hydraulic Fluid Specification

The reservoir is filled at the factory with high-quality tractor transmission/hydraulic fluid. The recommended replacement fluid is as follows:

Toro Premium Transmission/Hydraulic Tractor Fluid (Available in 19 L (5 gallon) pails or 208 L (55 gallon) drums. See the *Parts Catalog* or your Toro Distributor for part numbers).

Alternate fluids: If the Toro fluid is not available, Mobil® 424 hydraulic fluid may be used.

Note: Toro will not assume responsibility for damage caused by improper substitutions.

Many hydraulic fluids are almost colorless, making it difficult to spot leaks. A red dye additive for the hydraulic system oil is available in 20 ml (2/3 fl oz) bottles. One bottle is sufficient for 15 to 22 L (4 to 6 US gallons) of hydraulic fluid. Order Part No. 44-2500 from your authorized Toro distributor.

Checking the Hydraulic System

Service Interval: Before each use or daily

Check the level of the hydraulic fluid before you first start the engine and daily thereafter.

1. Position the machine on a level surface.
2. Move the motion-control levers to the NEUTRAL-LOCK position and start the engine.

   Note: Run the engine at the lowest possible rpm to purge the system of air.

   Important: **Do not engage the PTO.**
3. Raise the deck to extend the lift cylinders, shut off the engine, and remove the key.
4. Raise the seat to access the hydraulic fluid tank.
5. Remove the hydraulic fill cap from the filler neck (Figure 57).

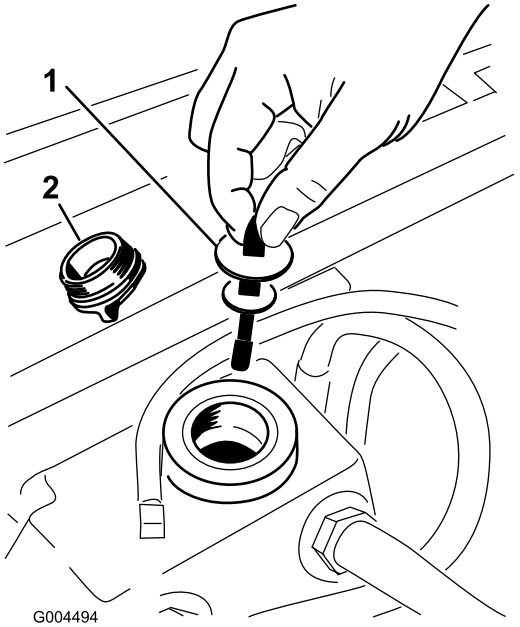

Figure 57

1. Dipstick
2. Fill cap

6. Remove the dipstick and wipe it with a clean rag (Figure 57).
7. Place the dipstick into the filler neck; then remove it and check the level of fluid (Figure 57).

   Note: If the level is not within the notched area of the dipstick, add enough high-quality hydraulic fluid to raise the level to within the notched area.

   Important: **Do not overfill.**
8. Replace the dipstick and thread the fill cap finger-tight onto the filler neck.
9. Check all hoses and fittings for leaks.

Changing the Hydraulic Fluid And Filter

Service Interval: After the first 200 hours

Every 800 hours

1. Disengage the PTO, move the motion-control levers to the NEUTRAL-LOCK position, and engage the parking brake.
2. Move the throttle lever to the SLOW position, shut off the engine, remove the key, and wait for all moving parts to stop before leaving the operating position.
3. Place a large pan under the hydraulic reservoir and transmission case and remove the plugs, draining all of the hydraulic fluid (Figure 58).

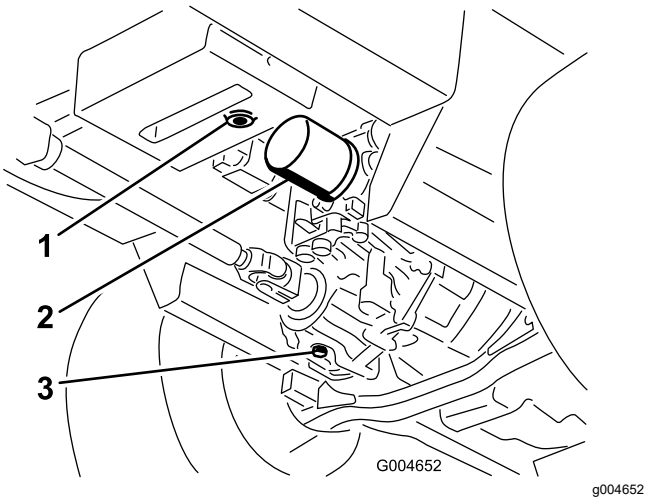

Figure 58

1. Hydraulic-reservoir drain plug
2. Filter
3. Transmission-case drain plug

4. Clean the area around the hydraulic fluid filter and remove the filter (Figure 58).
5. Immediately install a new hydraulic fluid filter.
6. Install the hydraulic-reservoir and transmission-case drain plugs.
7. Fill the reservoir to the proper level (approximately 5.7 L or 6 US qt); refer to Checking the Hydraulic System (page 54).
8. Start the engine and check for oil leaks. Allow the engine to run for about 5 minutes, then shut it off.
9. After 2 minutes, check the level of the hydraulic fluid; refer to Checking the Hydraulic System (page 54).

Cleaning

Cleaning Under the Cutting Unit

Service Interval: Before each use or daily

1. Disengage the PTO, move the motion-control levers to the NEUTRAL-LOCK position, and engage the parking brake.
2. Move the throttle lever to the SLOW position, shut off the engine, remove the key, and wait for all moving parts to stop before leaving the operating position.
3. Raise the cutting unit to the transport position.
4. Raise the front of the machine using jack stands.
5. Thoroughly clean the underside of the cutting unit with water.

Waste Disposal

Engine oil, batteries, hydraulic fluid, and engine coolant are pollutants. Dispose of these according to your state and local regulations.

Storage

Storage Safety

- Shut off the engine, remove the key (if equipped), and wait for all movement to stop before you leave the operator's position. Allow the machine to cool before adjusting, servicing, cleaning, or storing it.
- Do not store the machine or fuel container where there is an open flame, spark, or pilot light, such as on a water heater or other appliance.

Preparing the Machine for Storage

Important: **Do not use brackish or reclaimed water to clean the machine.**

1. Remove the key from the ignition switch and store it in a memorable place.
2. Thoroughly clean the machine, deck, and engine, paying special attention to these areas:
   - Radiator and radiator screen
   - Underneath the deck
   - Under the deck belt covers
   - Counterbalance springs
   - PTO-shaft assembly
   - All grease fittings and pivot points
   - Inside the control box
   - Beneath the seat plate and top of the transmission
3. Check and adjust front and rear tire pressure; refer to Checking the Tire Pressure (page 44).
4. Remove, sharpen, and balance the mower blades. Install the blades and torque the blade fasteners to 115 to 149 N·m (85 to 110 ft-lb).
5. Check all fasteners for looseness and tighten them as necessary. Torque the 6 bolts securing the mower deck frame to the traction unit (Figure 59) to 359 N·m (265 ft-lb).

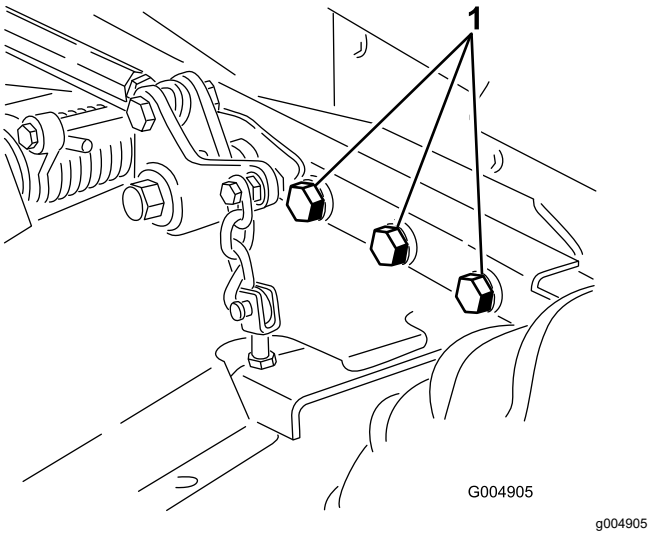

Figure 59

Right side not shown.

1. Bolts

6. Grease or oil all grease fittings, pivot points, and transmission-bypass-valve pins. Wipe off any excess lubricant.
7. Lightly sand and use touch up paint on painted areas that are scratched, chipped or rusted. Repair any dents in the metal body.
8. Service the battery and cables as follows:
   A. Remove the battery terminals from the battery posts.
   B. Clean the battery, terminals, and posts with a wire brush and baking soda solution.
   C. Coat the cable terminals and battery posts with Grafo 112X skin-over grease (Toro Part No. 505-47) or petroleum jelly to prevent corrosion.
   D. Slowly recharge the battery for 24 hours every 60 days to prevent lead sulfation of the battery.

Preparing the Engine

1. Drain the engine oil from the oil pan and install the drain plug.
2. Change the engine oil and filter; refer to Changing the Engine Oil And Filter (page 40).
3. Fill the engine with the designated quantity of engine oil; refer to Checking the Engine-Oil Level (page 39).
4. Start the engine and run it at idle speed for 2 minutes.
5. Drain the fuel from the fuel tank, fuel lines, pump, filter, and separator. Flush the fuel tank with clean diesel fuel and connect all fuel lines.
6. Thoroughly clean and service the air-cleaner assembly.
7. Seal the air-cleaner inlet and the exhaust outlet with weatherproof masking tape.
8. Check the oil-filler cap and fuel-tank cap to ensure that they are securely in place.

EEA/UK Privacy Notice

Toro's Use of Your Personal Information

The Toro Company ("Toro") respects your privacy. When you purchase our products, we may collect certain personal information about you, either directly from you or through your local Toro company or dealer. Toro uses this information to fulfil contractual obligations - such as to register your warranty, process your warranty claim or to contact you in the event of a product recall - and for legitimate business purposes - such as to gauge customer satisfaction, improve our products or provide you with product information which may be of interest. Toro may share your information with our subsidiaries, affiliates, dealers or other business partners in connection these activities. We may also disclose personal information when required by law or in connection with the sale, purchase or merger of a business. We will never sell your personal information to any other company for marketing purposes.

Retention of your Personal Information

Toro will keep your personal information as long as it is relevant for the above purposes and in accordance with legal requirements. For more information about applicable retention periods please contact legal@toro.com.

Toro's Commitment to Security

Your personal information may be processed in the US or another country which may have less strict data protection laws than your country of residence. Whenever we transfer your information outside of your country of residence, we will take legally required steps to ensure that appropriate safeguards are in place to protect your information and to make sure it is treated securely.

Access and Correction

You may have the right to correct or review your personal data, or object to or restrict the processing of your data. To do so, please contact us by email at legal@toro.com. If you have concerns about the way in which Toro has handled your information, we encourage you to raise this directly with us. Please note that European residents have the right to complain to your Data Protection Authority.

California Proposition 65 Warning Information

What is this warning?

You may see a product for sale that has a warning label like the following:



WARNING: Cancer and Reproductive Harm—www.p65Warnings.ca.gov.

What is Prop 65?

Prop 65 applies to any company operating in California, selling products in California, or manufacturing products that may be sold in or brought into California. It mandates that the Governor of California maintain and publish a list of chemicals known to cause cancer, birth defects, and/or other reproductive harm. The list, which is updated annually, includes hundreds of chemicals found in many everyday items. The purpose of Prop 65 is to inform the public about exposure to these chemicals.

Prop 65 does not ban the sale of products containing these chemicals but instead requires warnings on any product, product packaging, or literature with the product. Moreover, a Prop 65 warning does not mean that a product is in violation of any product safety standards or requirements. In fact, the California government has clarified that a Prop 65 warning "is not the same as a regulatory decision that a product is 'safe' or 'unsafe.'" Many of these chemicals have been used in everyday products for years without documented harm. For more information, go to https://oag.ca.gov/prop65/faqs-view-all.

A Prop 65 warning means that a company has either (1) evaluated the exposure and has concluded that it exceeds the "no significant risk level"; or (2) has chosen to provide a warning based on its understanding about the presence of a listed chemical without attempting to evaluate the exposure.

Does this law apply everywhere?

Prop 65 warnings are required under California law only. These warnings are seen throughout California in a wide range of settings, including but not limited to restaurants, grocery stores, hotels, schools, and hospitals, and on a wide variety of products. Additionally, some online and mail order retailers provide Prop 65 warnings on their websites or in catalogs.

How do the California warnings compare to federal limits?

Prop 65 standards are often more stringent than federal and international standards. There are various substances that require a Prop 65 warning at levels that are far lower than federal action limits. For example, the Prop 65 standard for warnings for lead is 0.5 µg/day, which is well below the federal and international standards.

Why don't all similar products carry the warning?

- Products sold in California require Prop 65 labelling while similar products sold elsewhere do not.
- A company involved in a Prop 65 lawsuit reaching a settlement may be required to use Prop 65 warnings for its products, but other companies making similar products may have no such requirement.
- The enforcement of Prop 65 is inconsistent.
- Companies may elect not to provide warnings because they conclude that they are not required to do so under Prop 65; a lack of warnings for a product does not mean that the product is free of listed chemicals at similar levels.

Why does Toro include this warning?

Toro has chosen to provide consumers with as much information as possible so that they can make informed decisions about the products they buy and use. Toro provides warnings in certain cases based on its knowledge of the presence of one or more listed chemicals without evaluating the level of exposure, as not all the listed chemicals provide exposure limit requirements. While the exposure from Toro products may be negligible or well within the "no significant risk" range, out of an abundance of caution, Toro has elected to provide the Prop 65 warnings. Moreover, if Toro does not provide these warnings, it could be sued by the State of California or by private parties seeking to enforce Prop 65 and subject to substantial penalties.

The Toro Warranty

Two-Year or 1,500 Hours Limited Warranty

Conditions and Products Covered

The Toro Company warrants your Toro Commercial product (“Product”) to be free from defects in materials or workmanship for 2 years or 1,500 operational hours*, whichever occurs first. This warranty is applicable to all products with the exception of Aerators (refer to separate warranty statements for these products). Where a warrantable condition exists, we will repair the Product at no cost to you including diagnostics, labor, parts, and transportation. This warranty begins on the date the Product is delivered to the original retail purchaser.
* Product equipped with an hour meter.

Instructions for Obtaining Warranty Service

You are responsible for notifying the Commercial Products Distributor or Authorized Commercial Products Dealer from whom you purchased the Product as soon as you believe a warrantable condition exists. If you need help locating a Commercial Products Distributor or Authorized Dealer, or if you have questions regarding your warranty rights or responsibilities, you may contact us at:

Toro Commercial Products Service Department
8111 Lyndale Avenue South
Bloomington, MN 55420-1196

952–888–8801 or 800–952–2740
E-mail: commercial.warranty@toro.com

Owner Responsibilities

As the product owner, you are responsible for required maintenance and adjustments stated in your *Operator's Manual*. Repairs for product issues caused by failure to perform required maintenance and adjustments are not covered under this warranty.

Items and Conditions Not Covered

Not all product failures or malfunctions that occur during the warranty period are defects in materials or workmanship. This warranty does not cover the following:

- Product failures which result from the use of non-Toro replacement parts, or from installation and use of add-on, or modified non-Toro branded accessories and products.
- Product failures which result from failure to perform recommended maintenance and/or adjustments.
- Product failures which result from operating the Product in an abusive, negligent, or reckless manner.
- Parts consumed through use that are not defective. Examples of parts which are consumed, or used up, during normal Product operation include, but are not limited to, brake pads and linings, clutch linings, blades, reels, rollers and bearings (sealed or greasable), bed knives, spark plugs, castor wheels and bearings, tires, filters, belts, and certain sprayer components such as diaphragms, nozzles, flow meters, and check valves.
- Failures caused by outside influence, including, but not limited to, weather, storage practices, contamination, use of unapproved fuels, coolants, lubricants, additives, fertilizers, water, or chemicals.
- Failure or performance issues due to the use of fuels (e.g. gasoline, diesel, or biodiesel) that do not conform to their respective industry standards.
- Normal noise, vibration, wear and tear, and deterioration. Normal “wear and tear” includes, but is not limited to, damage to seats due to wear or abrasion, worn painted surfaces, scratched decals or windows.

Parts

Parts scheduled for replacement as required maintenance are warranted for the period of time up to the scheduled replacement time for that part. Parts replaced under this warranty are covered for the duration of the original product warranty and become the property of Toro. Toro will make the final decision whether to repair any existing part or assembly or replace it. Toro may use remanufactured parts for warranty repairs.

Deep Cycle and Lithium-Ion Battery Warranty

Deep cycle and Lithium-Ion batteries have a specified total number of kilowatt-hours they can deliver during their lifetime. Operating, recharging, and maintenance techniques can extend or reduce total battery life. As the batteries in this product are consumed, the amount of useful work between charging intervals will slowly decrease until the battery is completely worn out. Replacement of worn out batteries, due to normal consumption, is the responsibility of the product owner. Note: (Lithium-Ion battery only): Refer to the battery warranty for additional information.

Lifetime Crankshaft Warranty (ProStripe 02657 Model Only)

The Prostripe which is fitted with a genuine Toro Friction Disc and Crank-Safe Blade Brake Clutch (integrated Blade Brake Clutch (BBC) + Friction Disc assembly) as original equipment and used by the original purchaser in accordance with recommended operating and maintenance procedures, are covered by a Lifetime Warranty against engine crankshaft bending. Machines fitted with friction washers, Blade Brake Clutch (BBC) units and other such devices are not covered by the Lifetime Crankshaft Warranty.

Maintenance is at Owner’s Expense

Engine tune-up, lubrication, cleaning and polishing, replacement of filters, coolant, and completing recommended maintenance are some of the normal services Toro products require that are at the owner’s expense.

General Conditions

Repair by an Authorized Toro Distributor or Dealer is your sole remedy under this warranty.

The Toro Company is not liable for indirect, incidental or consequential damages in connection with the use of the Toro Products covered by this warranty, including any cost or expense of providing substitute equipment or service during reasonable periods of malfunction or non-use pending completion of repairs under this warranty. Except for the Emissions warranty referenced below, if applicable, there is no other express warranty. All implied warranties of merchantability and fitness for use are limited to the duration of this express warranty.

Some states do not allow exclusions of incidental or consequential damages, or limitations on how long an implied warranty lasts, so the above exclusions and limitations may not apply to you. This warranty gives you specific legal rights, and you may also have other rights which vary from state to state.

Note Regarding Emissions Warranty

The Emissions Control System on your Product may be covered by a separate warranty meeting requirements established by the U.S. Environmental Protection Agency (EPA) and/or the California Air Resources Board (CARB). The hour limitations set forth above do not apply to the Emissions Control System Warranty. Refer to the Engine Emission Control Warranty Statement supplied with your product or contained in the engine manufacturer’s documentation.

Countries Other than the United States or Canada

Customers who have purchased Toro products exported from the United States or Canada should contact their Toro Distributor (Dealer) to obtain guarantee policies for your country, province, or state. If for any reason you are dissatisfied with your Distributor's service or have difficulty obtaining guarantee information, contact your Authorized Toro Service Center.