Form No. 3445-985 Rev A

TORO®

Count on it.

Parts Catalog

# Groundsmaster® 7210

## Series Traction Unit

**Model No. 30695—Serial No. 409300000 and Up**

Register at www.Toro.com.
Original Instructions (EN)

CE

*3445-985* A

# Ordering Replacement Parts

To order replacement parts, please supply the part number, the quantity, and the description of each part desired.

### Understanding Reference Numbers

Each identified part in an illustration has a reference number. The reference number for a part also appears in the parts list, along with other information about the part.

This catalog uses two special reference number formats, one to indicate parts in a service assembly and another to indicate the quantity of a given part in an illustration.

### Service Assembly Reference Numbers

Parts in service assemblies have reference numbers in the form a:b. The a represents the reference number of the entire service assembly and the b represents a sequential number unique to each part within the service assembly.

For example, a wheel assembly might be identified by reference number 6, the tire by 6:1, the valve by 6:2, and the wheel by 6:3. When you order the assembly identified by reference number 6, you receive all parts identified by reference numbers 6:1,6:2, and 6:3. However, you may also order any part individually. Reference numbers of this type appear in illustration and in parts lists.

### Reference Numbers Indicating Quantity

In an illustration, if a reference number indicates more than one part, the reference number has the form nX y. The n represents the quantity of the part, the X is the multiplication symbol, and the y represents the reference number.

For example, in an illustration, the reference number 2X 37 means that two of the parts identified by reference number 37 are indicated.

# Contents


Transmission Assembly . . . 6
Charge Pump Housing Assembly Transmission Assembly No. 131-5510 . . . 8
Center Section Assembly Transmission Assembly No. 131-5510 . . . 10
Gear Case and Clutch Assembly Transmission Assembly No. 131-5510 . . . 12
Driveshaft Assembly No. 110-3575 . . . 14
Hydraulic Gear Pump Assembly No. 112-9542 . . . 15
Rear Drive Assembly . . . 16
Hydraulic Motor Assembly No. 108-5155 . . . 17
Hydraulic Motor Assembly No. 108-5230 . . . 18
LH Brake Caliper Assembly No. 120-0013 . . . 19
RH Brake Caliper Assembly No. 120-0014 . . . 20
Brake Handle Assembly . . . 21
Traction Control Assembly . . . 22
Link Assembly No. 112-5099 . . . 23
RH Lever Assembly No. 125-2687 . . . 24
Control Panel Assembly . . . 25
Left-Hand and Right-Hand Fuel Tank Assembly . . . 26
LH Fuel Tank Assembly No. 131-5509 . . . 27
RH Fuel Tank Assembly No. 132-8116 . . . 28
Fuel System Assembly . . . 29
Seat and Seat Plate Assembly . . . 30
Seat Assembly No. 125-3107 . . . 31
Floorplate and Carrier Frame Assembly . . . 32
Carrier Frame Assembly No. 136-4466 . . . 33
Lift Valve and Cylinder Assembly . . . 34
Valve Assembly No. 131-1934 . . . 36
Hydraulic Cylinder Assembly No. 110-9834 . . . 38
Caster Wheel Assembly . . . 39
Caster Wheel Assembly No. 133-4723 . . . 40
Deck Lift Assembly . . . 41
Battery and Relay Assembly . . . 42
Main Wire Harness Assembly . . . 43
Engine Harness Assembly . . . 44
Hydraulic Reservoir Assembly . . . 45
Hydraulic Reservoir Assembly No. 110-8237 . . . 46
Hydraulic Hose Routing Assembly . . . 47
Air Cleaner Assembly . . . 48
Air Cleaner Assembly No. 136-4481 . . . 50
Frame and Upper-ROPS Assembly . . . 52
Engine Assembly . . . 53
Radiator Assembly . . . 54
Cooling Assembly No. 121-3330 . . . 56
Hood Assembly . . . 58
Cylinder Block Assembly . . . 60
Gear Housing Assembly . . . 62
Cylinder Head and Cover Assembly . . . 64
Suction Manifold Assembly . . . 66
Exhaust Manifold Assembly . . . 68
Diesel Particulate Filter Assembly . . . 70
Flywheel Housing and Oil Sump Assembly . . . 72
Camshaft and Driving Gear Assembly . . . 73
Crankshaft and Piston Assembly . . . 74
Cooling Water System Assembly . . . 76
Lubrication and Oil System Assembly . . . 78



**© 2021—The Toro® Company**


**8111 Lyndale Avenue South**
**Bloomington, MN 55420**





**Contact us at www.Toro.com.**
**Printed in the USA.**


**All Rights Reserved**

# Contents (continued)

Fuel System Assembly . . . . . 79
Fuel Injection Valve Assembly . . . . . 80
Fuel Line Assembly . . . . . 81
Starting Motor Assembly . . . . . 82
Generator Assembly . . . . . 84
Electronic Control Unit Assembly . . . . . 86
Electric Parts Assembly . . . . . 87
Gasket Set . . . . . 88
Attachments and Accessories . . . . . 89

# Transmission Assembly

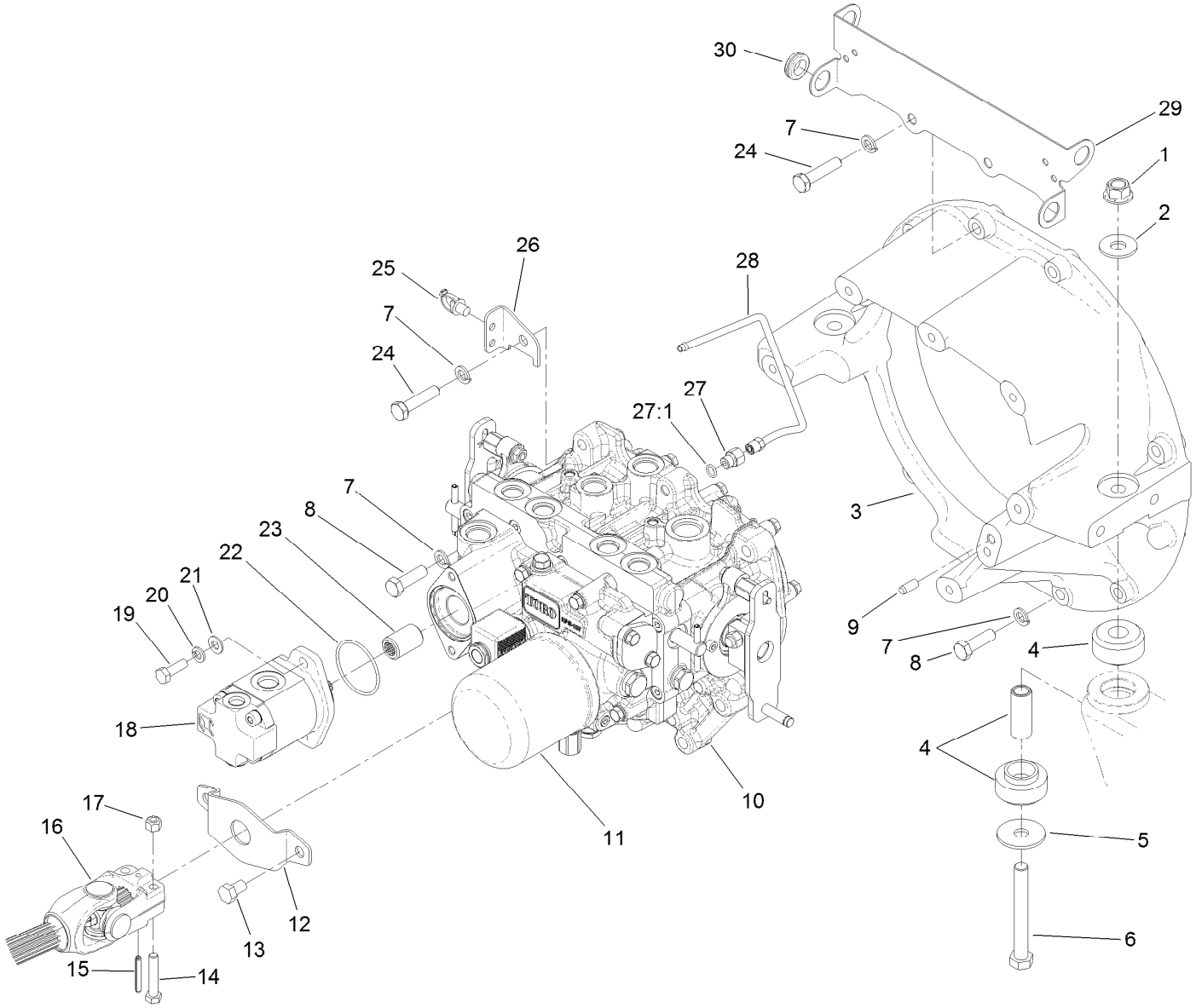

# Transmission Assembly (continued)

| Ref. | Part Number | Qty. | Description |
|---|---|---|---|
| 1 | 99-5107 | 2 | Nut-Lock |
| 2 | 3256-6 | 2 | Washer-Flat |
| 3 | 125-2836 | 1 | Housing-Flywheel |
| 4 | 120-9168 | 2 | Mount-Rubber |
| 5 | 86-1990 | 2 | Washer-Thrust |
| 6 | 325-17 | 2 | Screw-HH |
| 7 | 48-9590 | 16 | Washer-Lock |
| 8 | 33115-035 | 3 | Screw-HH |
| 9 | 87-1910 | 2 | Pin-Dowel |
| 10 | 131-5510 | 1 | Transmisson ASM |
| 11 | 108-5194 | 1 | Filter-Oil, HYD |
| 12 | 114-4088 | 1 | Shield-Seal |
| 13 | 33115-016 | 2 | Screw-HH |
| 14 | 322-9 | 4 | Screw-HH |
| 15 | 32121-34 | 2 | Pin-Roll |
| 16 | 110-3575 | 1 | Driveshaft ASM |

| Ref. | Part Number | Qty. | Description |
|---|---|---|---|
| 17 | 3296-29 | 4 | Nut-Lock, NI |
| 18 | 112-9542 | 1 | HYD Gear Pump ASM |
| 19 | 33114-025 | 2 | Screw-HH |
| 20 | 3253-4 | 2 | Washer-Lock |
| 21 | 3256-23 | 2 | Washer-Plain |
| 22 | 108-9919 | 1 | O-Ring |
| 23 | 108-9920 | 1 | Coupler-Spline |
| 24 | 33115-045 | 13 | Screw-HH |
| 25 | 32180-030 | 1 | Clip-Tie |
| 26 | 120-0239 | 1 | Support-Tube |
| 27 | 110-5536 | 1 | Fitting-HYD, Adapter |
| 27:1 | 237-78 | 1 | O-Ring |
| 28 | 110-5537 | 1 | Tube |
| 29 | 131-5526-0P | 1 | Bracket-Guide |
| 30 | 240-3 | 2 | Grommet-Rubber |

# Charge Pump Housing Assembly
# Transmission Assembly No. 131-5510

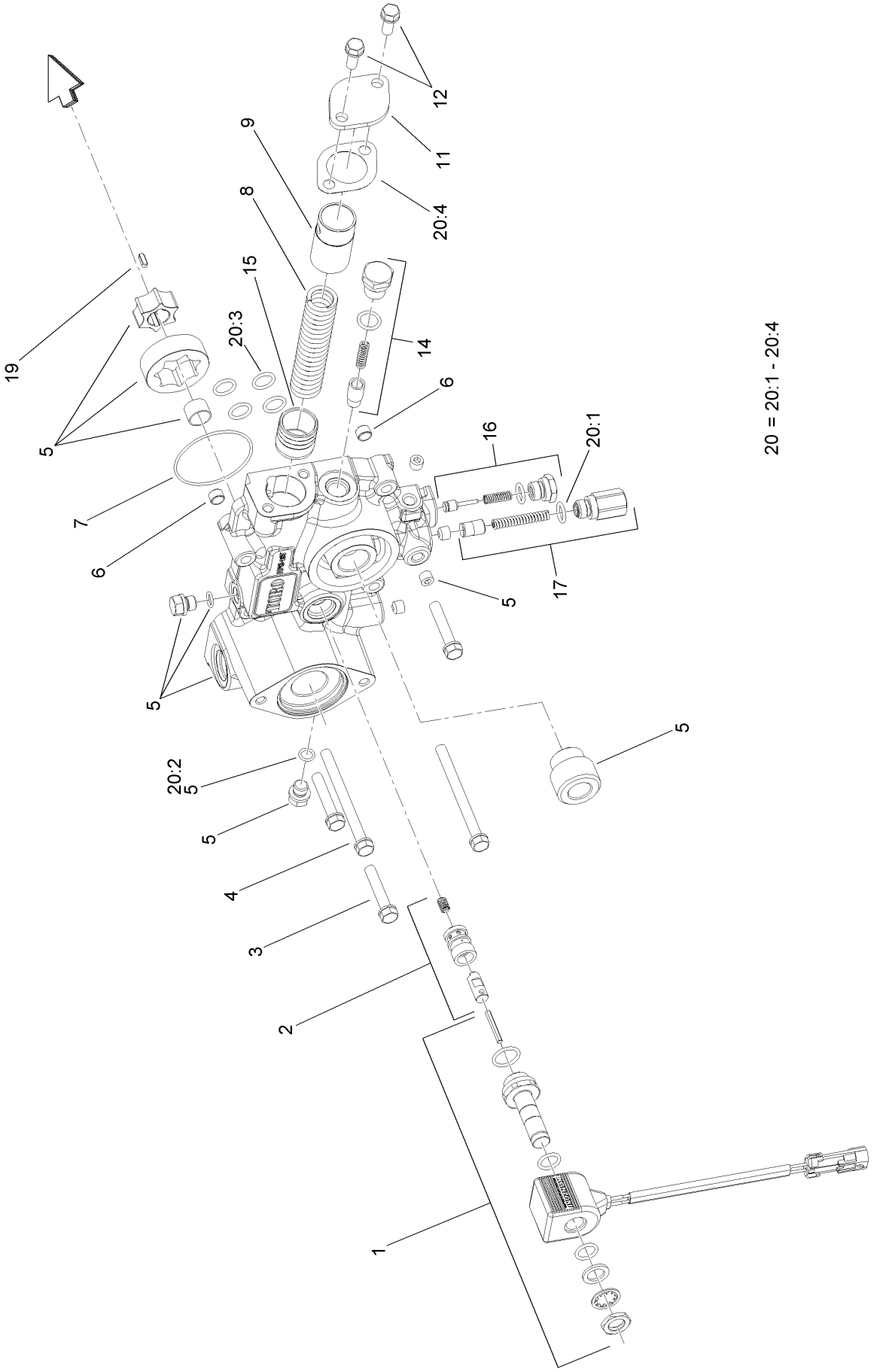


20 = 20:1 - 20:4

# Charge Pump Housing Assembly
# Transmission Assembly No. 131-5510 (continued)

| Ref. | Part Number | Qty. | Description |
|---|---|---|---|
| 1 | 107-0851 | 1 | Solenoid ASM |
| 2 | 107-0850 | 1 | Solenoid Valve ASM |
| 3 | 107-0863 | 3 | Bolt |
| 4 | 107-0864 | 2 | Bolt |
| 5 | 107-0840 | 1 | Pump Body ASM |
| 6 | 107-0848 | 2 | Pin |
| 7 | 107-0856 | 1 | O-Ring |
| 8 | 107-0845 | 1 | Spring |
| 9 | 107-0844 | 1 | Collar |
| 11 | 107-0846 | 1 | Cover |
| 12 | 93-0457 | 2 | Bolt And Washer ASM |

| Ref. | Part Number | Qty. | Description |
|---|---|---|---|
| 14 | 107-0843 | 1 | Filter Bypass Valve ASM |
| 15 | 107-0818 | 1 | Piston |
| 16 | 107-0842 | 1 | Charge Relief Valve ASM |
| 17 | 107-0841 | 1 | Pressure Valve ASM |
| 19 | 107-0865 | 1 | Key |
| 20 | 107-0855 | 1 | Charge Pump Seal Kit |
| 20:1 | 93-0418 | 2 | O-Ring |
| 20:2 | 107-0817 | 2 | O Ring-Plug |
| 20:3 | 104-3298 | 6 | Packing |
| 20:4 | 107-0847 | 1 | Gasket |

# Center Section Assembly
# Transmission Assembly No. 131-5510

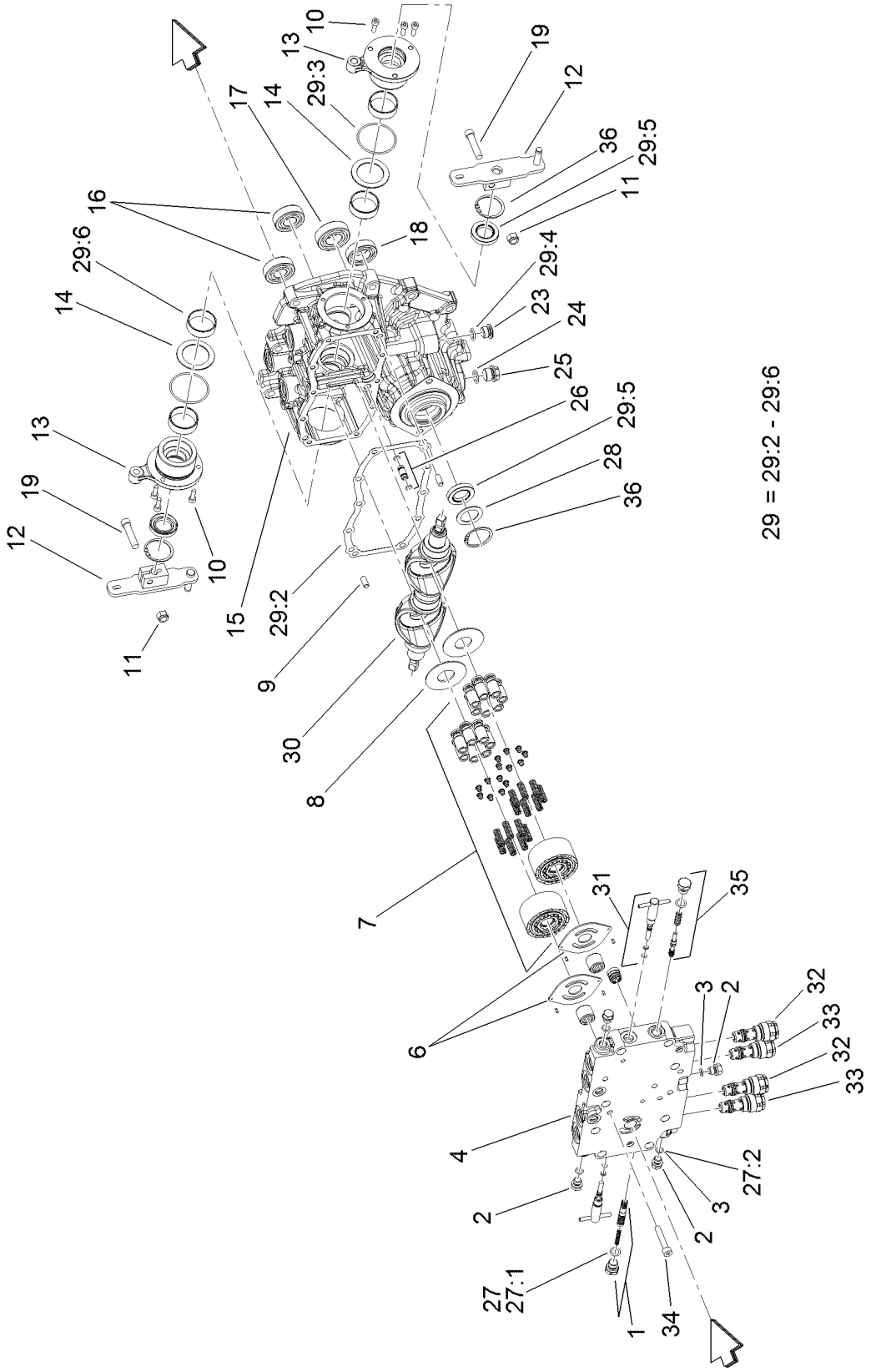

# Center Section Assembly
# Transmission Assembly No. 131-5510 (continued)

| Ref. | Part Number | Qty. | Description |
|---|---|---|---|
| 1 | 107-0807 | 1 | Valve-Flushing, RH |
| 2 | 107-0857 | 6 | Plug |
| 3 | 107-0817 | 6 | O Ring-Plug |
| 4 | 121-3377 | 1 | Center Case, Complete |
| 6 | 107-0805 | 2 | Plate-Valve |
| 7 | 107-0824 | 2 | Cylinder Block ASM |
| 8 | 107-0830 | 2 | Plate-Thrust |
| 9 | 92-0765 | 4 | Pin-Parallel |
| 10 | 107-0859 | 6 | Bolt |
| 11 | 120-6681 | 2 | U-Nut |
| 12 | 120-6680 | 2 | Arm-Control |
| 13 | 107-0832 | 2 | Side Cover ASM |
| 14 | 107-0829 | 2 | Washer |
| 15 | 120-5151 | 1 | Pump Housing ASM |
| 16 | 107-0826 | 2 | Bearing |
| 17 | 107-0821 | 1 | Bearing |
| 18 | 107-0838 | 1 | Bearing |
| 19 | 120-6682 | 2 | Bolt |
| 23 | 107-0861 | 1 | Plug-NPTF |
| 24 | 237-79 | 1 | O-Ring |
| 25 | 107-0867 | 1 | Plug |
| 26 | 107-0812 | 1 | Pipe |
| 27 | 107-0852 | 1 | Center Case Seal Kit |
| 27:1 | 93-0418 | 2 | O-Ring |
| 27:2 | 107-0817 | 6 | O Ring-Plug |
| 28 | 107-0813 | 1 | Spacer |
| 29 | 107-0853 | 1 | Pump Housing Seal Kit |
| 29:2 | 107-0810 | 1 | Gasket-Case, Center |
| 29:3 | 107-0817 | 2 | O Ring-Plug |
| 29:4 | 104-3298 | 1 | Packing |
| 29:5 | 107-0814 | 3 | Seal |
| 29:6 | 107-0825 | 4 | Ring-Seal |
| 30 | 120-6679 | 2 | Plate-Swash |
| 31 | 107-0808 | 2 | Valve-Bypass |
| 32 | 107-0804 | 2 | Valve-Rear |
| 33 | 107-0803 | 2 | Valve-Front |
| 34 | 107-0863 | 8 | Bolt |
| 35 | 107-0806 | 1 | Valve-Flushing, LH |
| 36 | 92-0757 | 2 | Ring-Snap |

# Gear Case and Clutch Assembly
# Transmission Assembly No. 131-5510

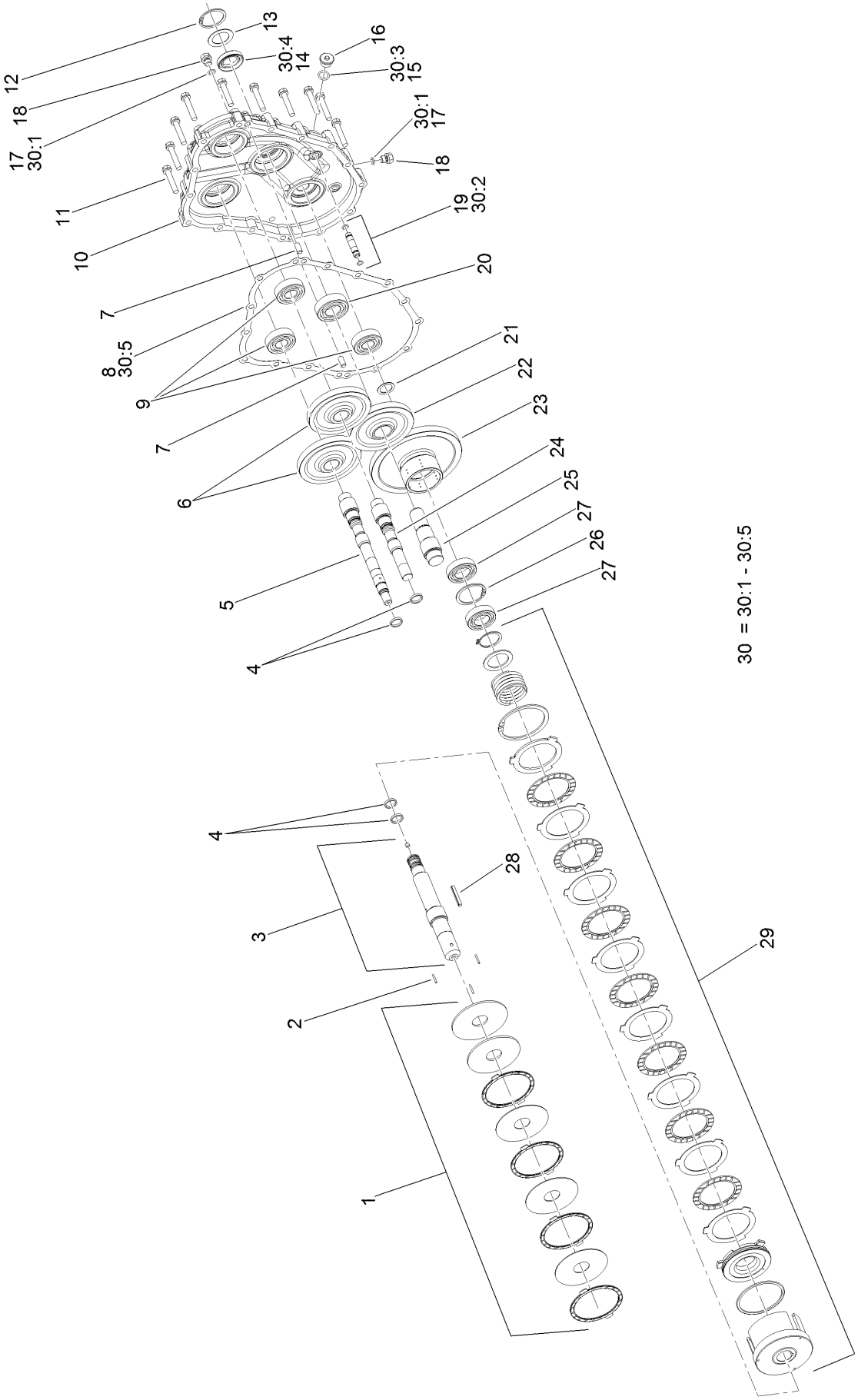

# Gear Case and Clutch Assembly
# Transmission Assembly No. 131-5510 (continued)

| Ref. | Part Number | Qty. | Description |
|---|---|---|---|
| 1 | 107-0839 | 1 | PTO Brake ASM |
| 2 | 107-0837 | 3 | Rod-Push |
| 3 | 107-0833 | 1 | PTO Shaft ASM |
| 4 | 107-0825 | 2 | Ring-Seal |
| 5 | 107-0827 | 1 | Shaft-Pump |
| 6 | 107-0823 | 2 | Gear-Pump |
| 7 | 92-0765 | 4 | Pin-Parallel |
| 8 | 107-0816 | 1 | Gasket-Housing, Gear |
| 9 | 107-0826 | 4 | Bearing |
| 10 | 120-5152 | 1 | Housing-Case, Gear |
| 11 | 107-0863 | 13 | Bolt |
| 12 | 92-0757 | 1 | Ring-Snap |
| 13 | 107-0813 | 1 | Spacer |
| 14 | 107-0814 | 1 | Seal |
| 15 | 104-3298 | 1 | Packing |
| 16 | 107-0861 | 1 | Plug-NPTF |
| 17 | 107-0817 | 6 | O Ring-Plug |
| 18 | 107-0857 | 6 | Plug |
| 19 | 107-0811 | 1 | Pipe |
| 20 | 107-0821 | 2 | Bearing |
| 21 | 107-0836 | 1 | Spacer |
| 22 | 107-0820 | 1 | Gear-Input |
| 23 | 107-0834 | 1 | Gear-PTO |
| 24 | 107-0822 | 1 | Shaft-Pump |
| 25 | 107-0819 | 1 | Shaft-Input |
| 26 | 92-0758 | 1 | Ring-Snap |
| 27 | 107-0838 | 3 | Bearing |
| 28 | 107-0866 | 1 | Key |
| 29 | 107-0835 | 1 | Clutch Cylinder ASM |
| 30 | 107-0854 | 1 | Gear Housing Seal Kit |
| 30:1 | 107-0817 | 2 | O Ring-Plug |
| 30:2 | | 2 | O-Ring ● |
| 30:3 | 104-3298 | 1 | Packing |
| 30:4 | 107-0814 | 1 | Seal |
| 30:5 | 107-0816 | 1 | Gasket-Housing, Gear |

● Not serviced separately

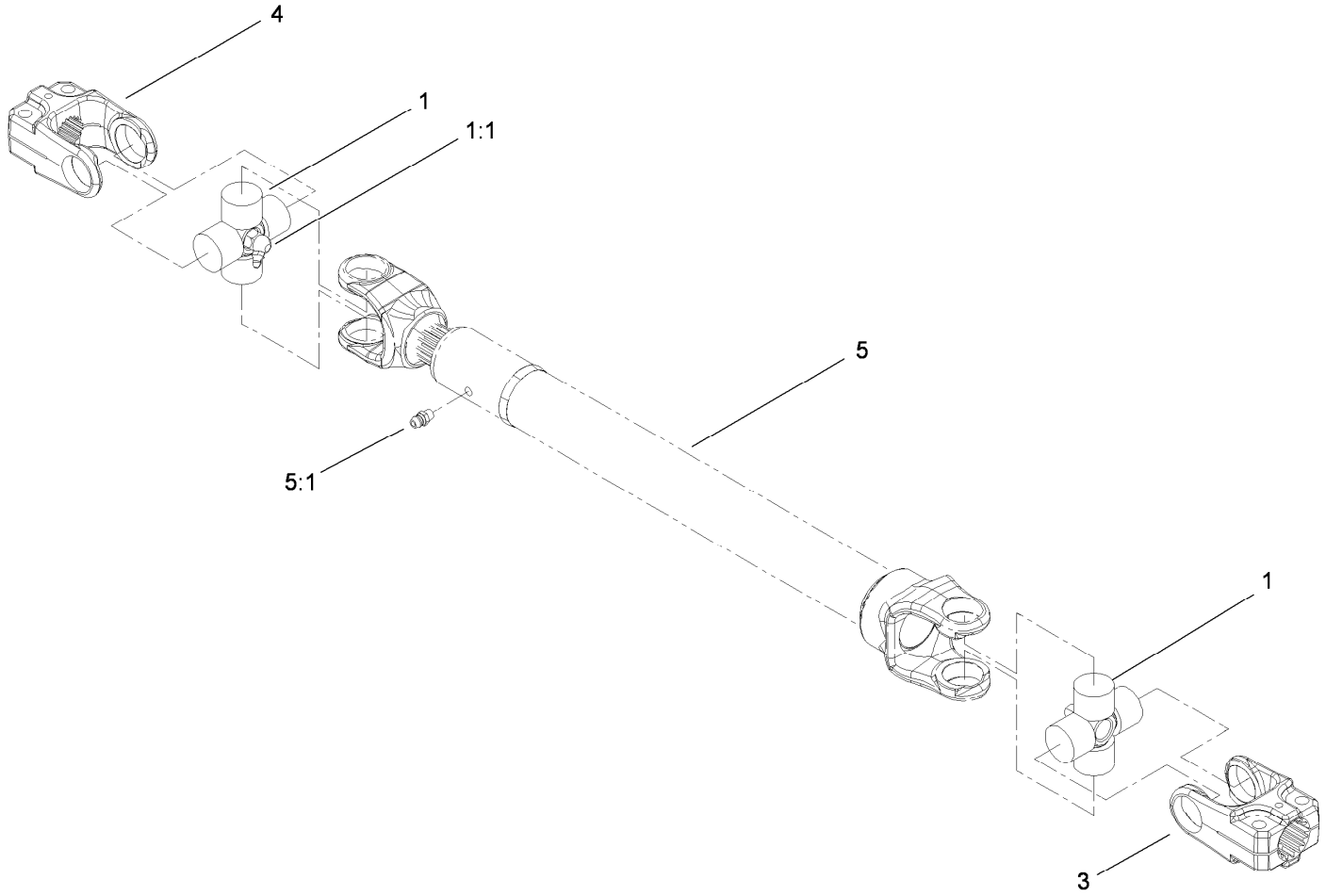


# Driveshaft Assembly No. 110-3575

| *Ref.* | *Part Number* | *Qty.* | *Description* |
|---|---|---|---|
| 1 | 112-1687 | 2 | Cross And Bearing Kit |
| 1:1 | 62-3820 | 1 | Fitting-Grease |
| 3 | 54-9040 | 1 | Yoke-End |
| 4 | 54-9090 | 1 | Yoke-End |
| 5 | | 1 | Tube-Yoke, Slip ● |
| 5:1 | 302-22 | 1 | Fitting-Grease |

● Not serviced separately

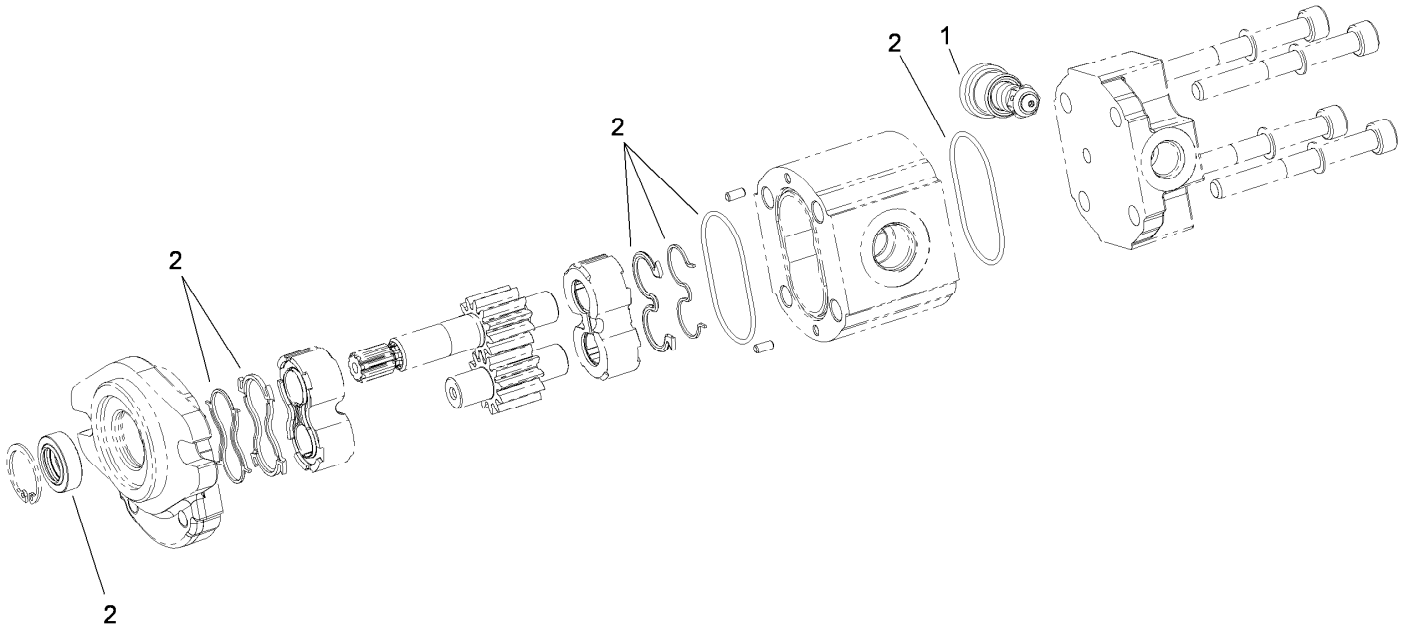


# Hydraulic Gear Pump Assembly No. 112-9542

| *Ref.* | *Part Number* | *Qty.* | *Description* |
|---|---|---|---|
| 1 | 112-0198 | 1 | Valve |
| 2 | 112-0199 | 1 | Seal Kit |

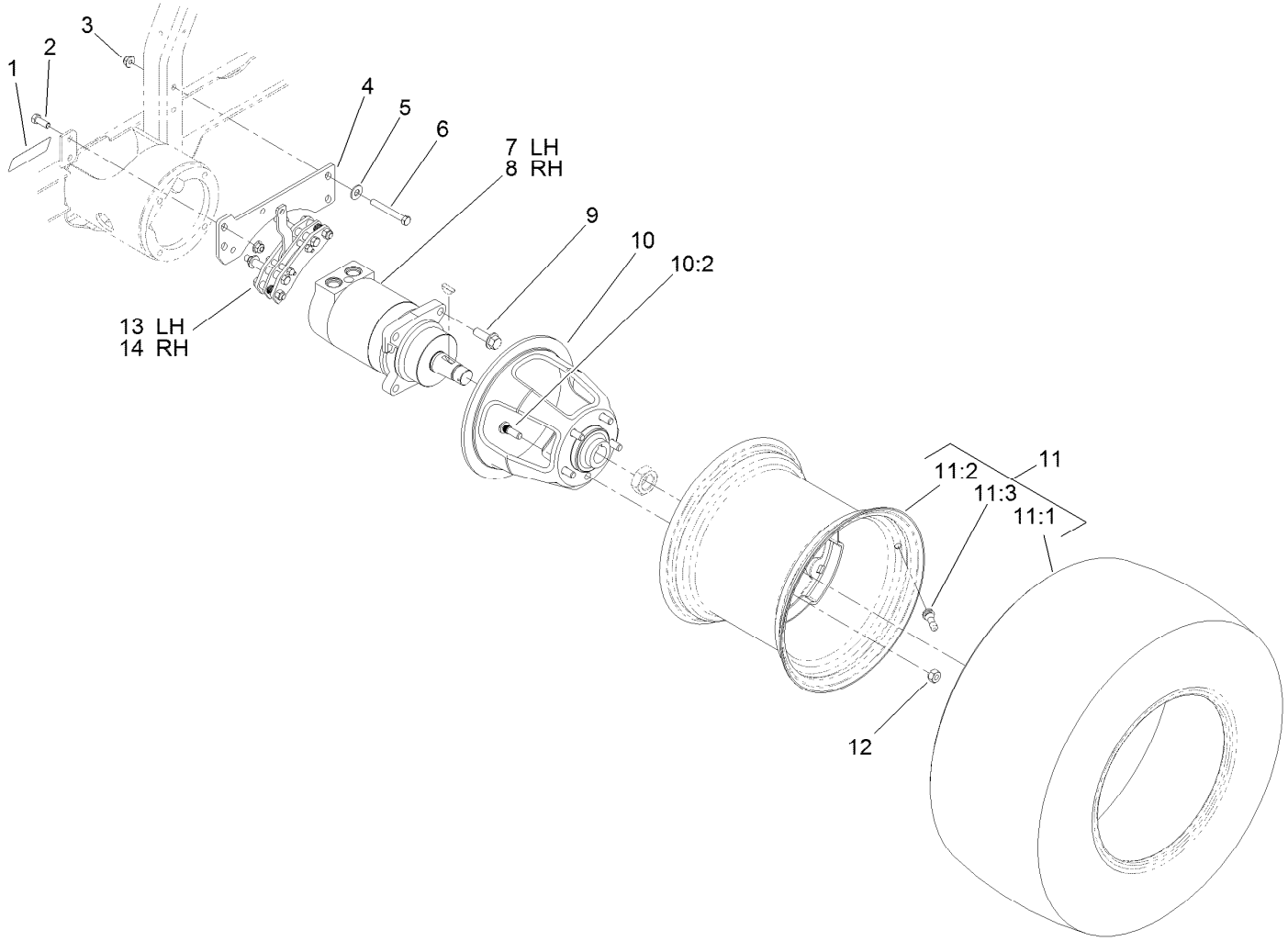


# Rear Drive Assembly

| Ref. | Part Number | Qty. | Description |
|---|---|---|---|
| 1 | 106-9206 | 2 | Decal-Torque, Wheel |
| 2 | 323-6 | 4 | Screw-HH |
| 3 | 104-8301 | 8 | Nut-HF, NI |
| 4 | 112-9550-0P | 2 | Bracket-Brake |
| 5 | 3256-4 | 4 | Washer-Flat |
| 6 | 323-14 | 4 | Screw-HH |
| 7 | 108-5155 | 1 | LH HYD Motor ASM |
| 8 | 108-5230 | 1 | RH HYD Motor ASM |
| 9 | 100-6116 | 8 | Screw-HHF |

| Ref. | Part Number | Qty. | Description |
|---|---|---|---|
| 10 | 110-5535 | 2 | Wheel Hub ASM |
| 10:2 | 87-8730 | 5 | Stud |
| 11 | 106-7864 | 2 | Tire And Wheel ASM |
| 11:1 | 106-7868 | 1 | Tire |
| 11:2 | 87-6750 | 1 | Wheel |
| 11:3 | 232-27 | 1 | Stem-Valve |
| 12 | 23-7270 | 10 | Nut-Lug |
| 13 | 120-0013 | 1 | LH Brake Caliper ASM |
| 14 | 120-0014 | 1 | RH Brake Caliper ASM |

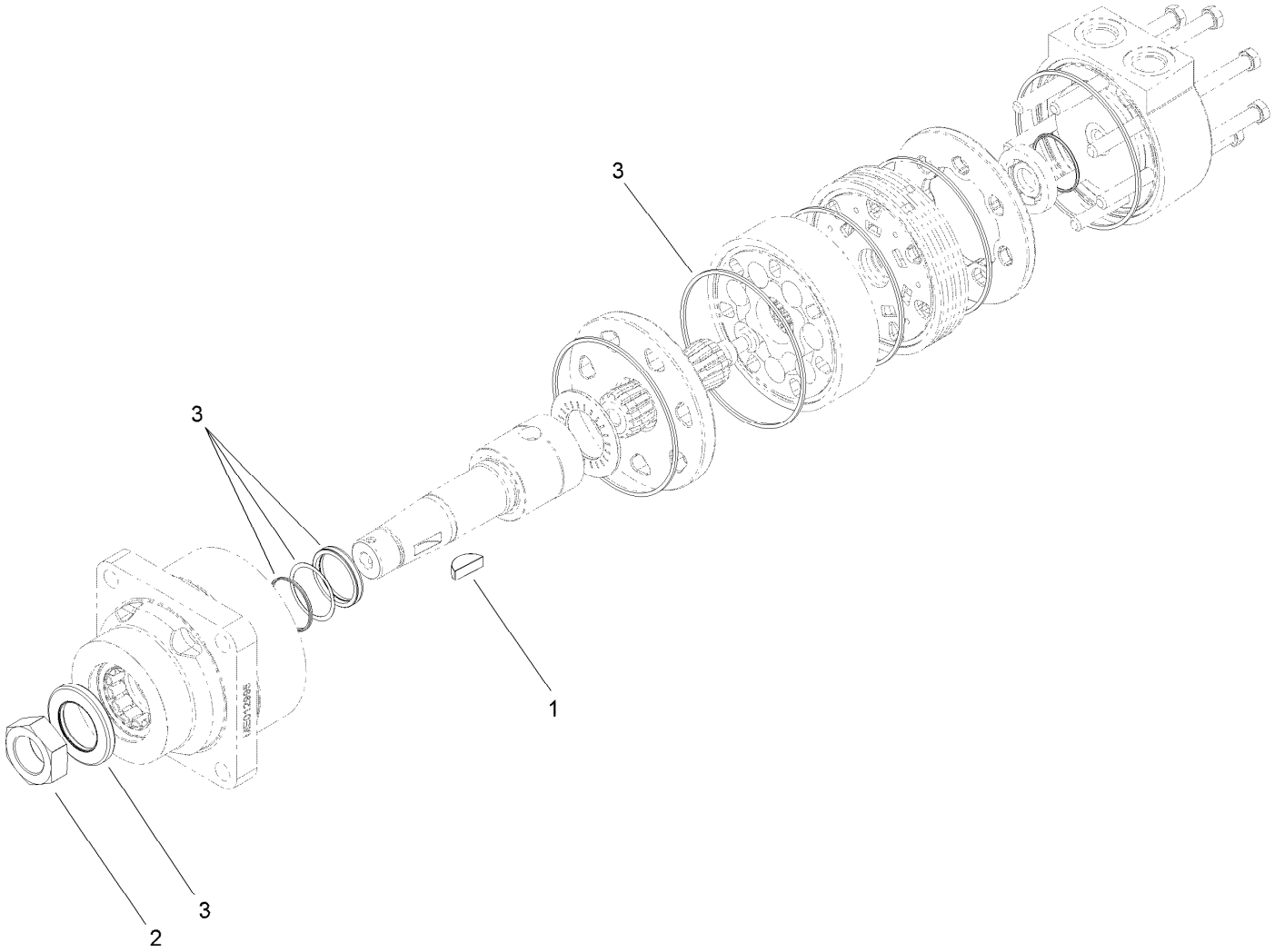


# Hydraulic Motor Assembly No. 108-5155

| *Ref.* | *Part Number* | *Qty.* | *Description* |
|---|---|---|---|
| 1 | 3257-42 | 1 | Key-Woodruff |
| 2 | 107-9319 | 1 | Nut-Hex |
| 3 | 112-8405 | 1 | Seal Kit |

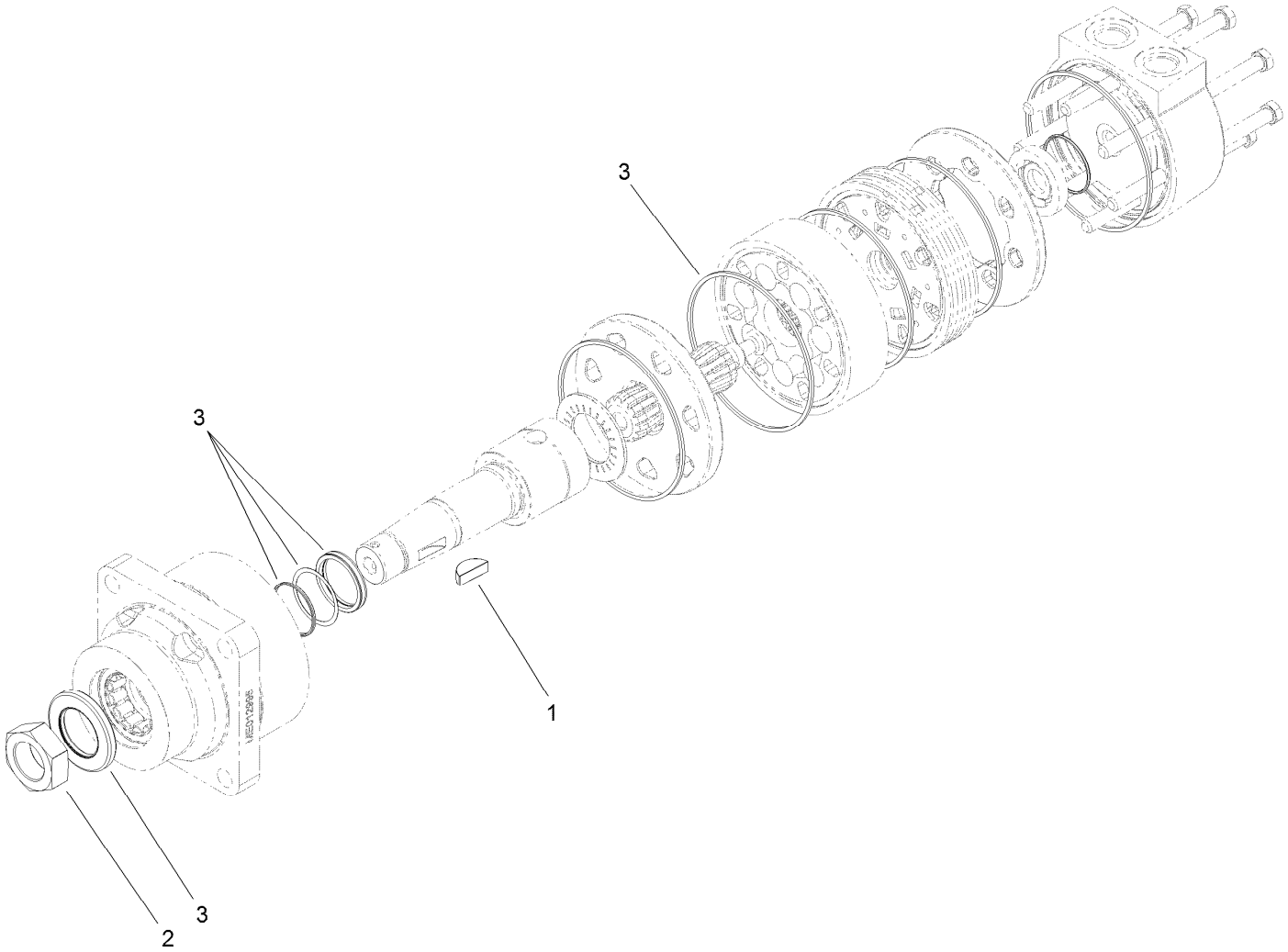


# Hydraulic Motor Assembly No. 108-5230

| *Ref.* | *Part Number* | *Qty.* | *Description* |
|---|---|---|---|
| 1 | 3257-42 | 1 | Key-Woodruff |
| 2 | 107-9319 | 1 | Nut-Hex |
| 3 | 112-8405 | 1 | Seal Kit |

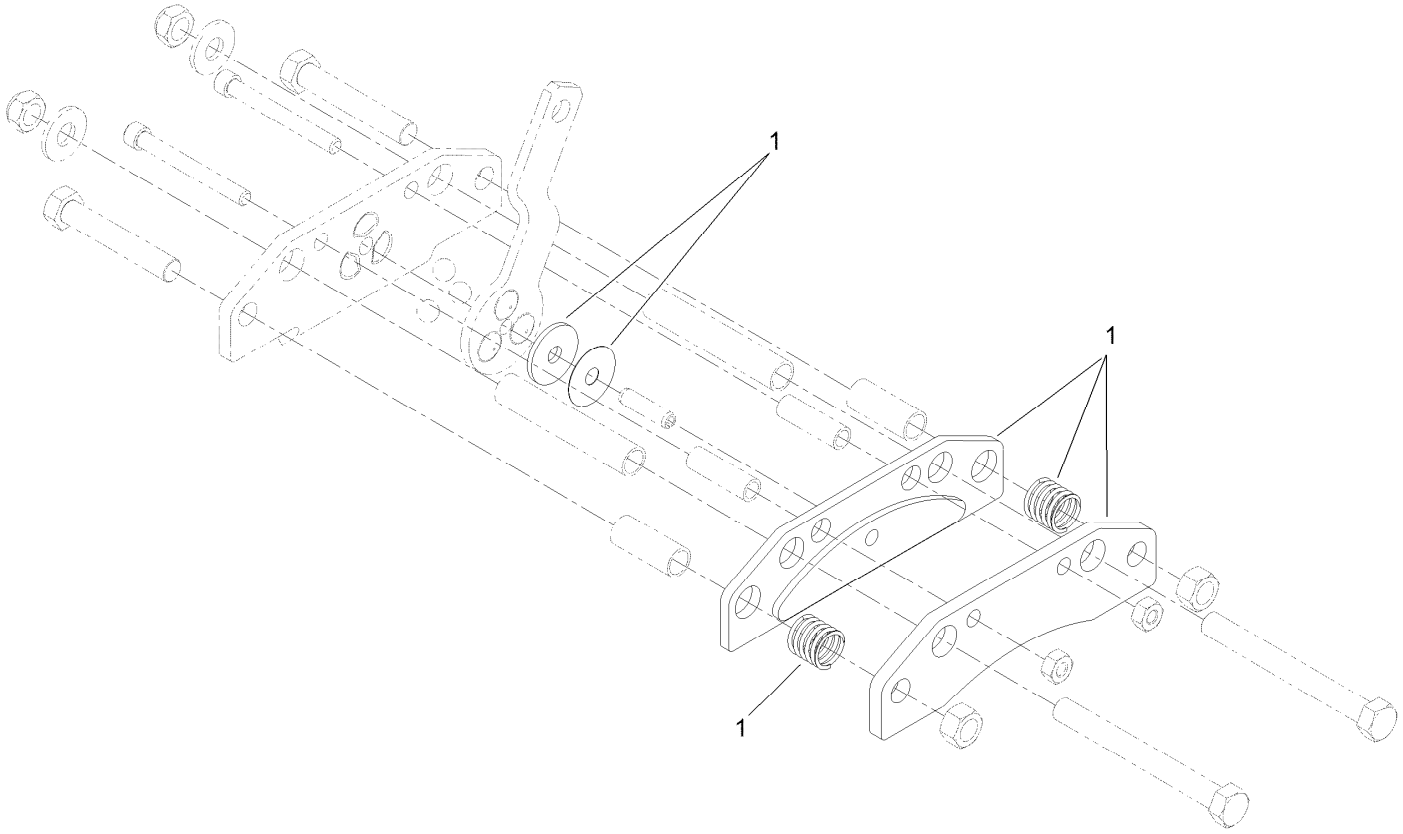


# LH Brake Caliper Assembly No. 120-0013

| *Ref.* | *Part Number* | *Qty.* | *Description* |
|---|---|---|---|
| 1 | 120-0015 | 1 | Replacement Brake Pad Service Kit |

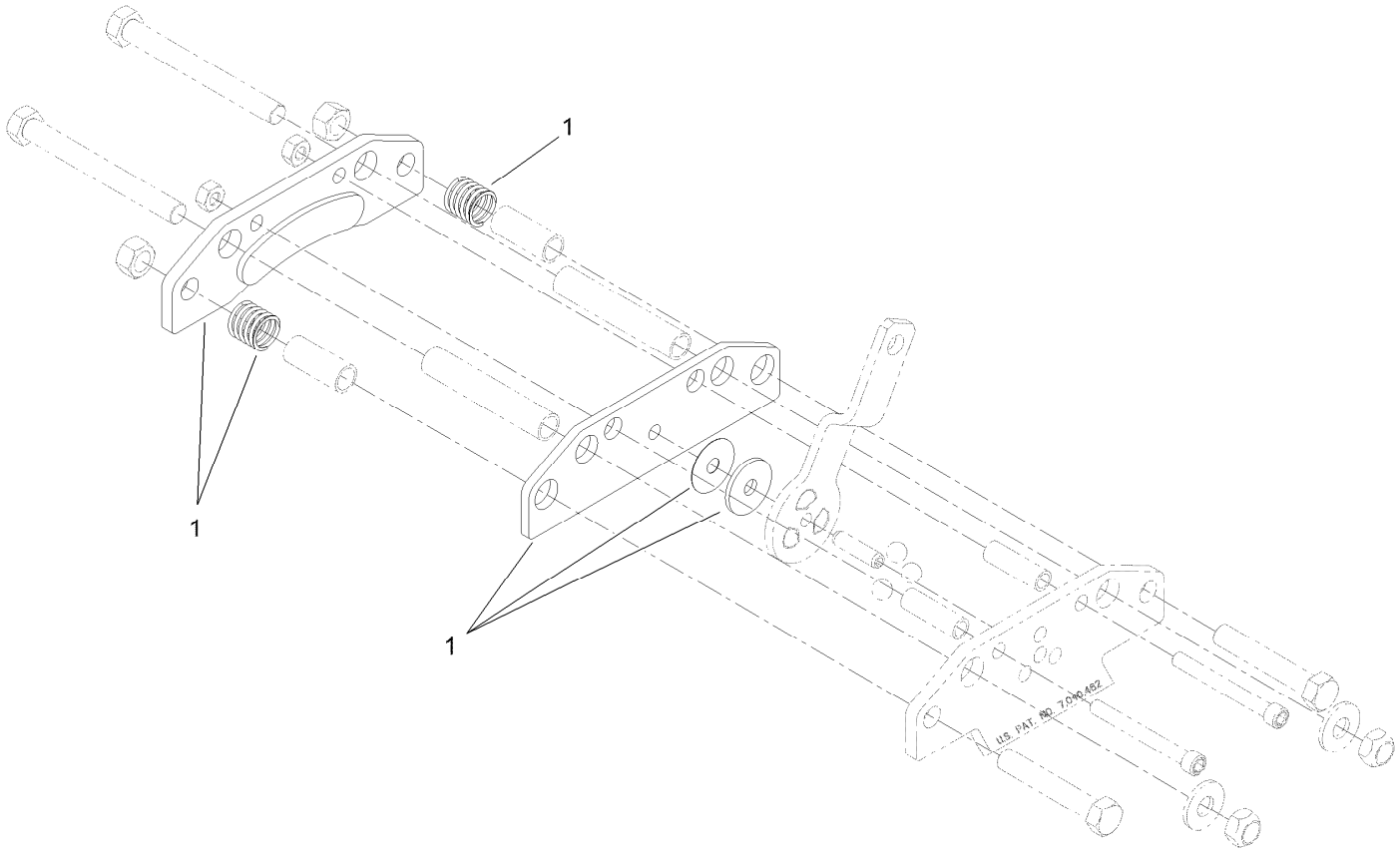


# RH Brake Caliper Assembly No. 120-0014

| *Ref.* | *Part Number* | *Qty.* | *Description* |
|---|---|---|---|
| 1 | 120-0015 | 1 | Replacement Brake Pad Service Kit |

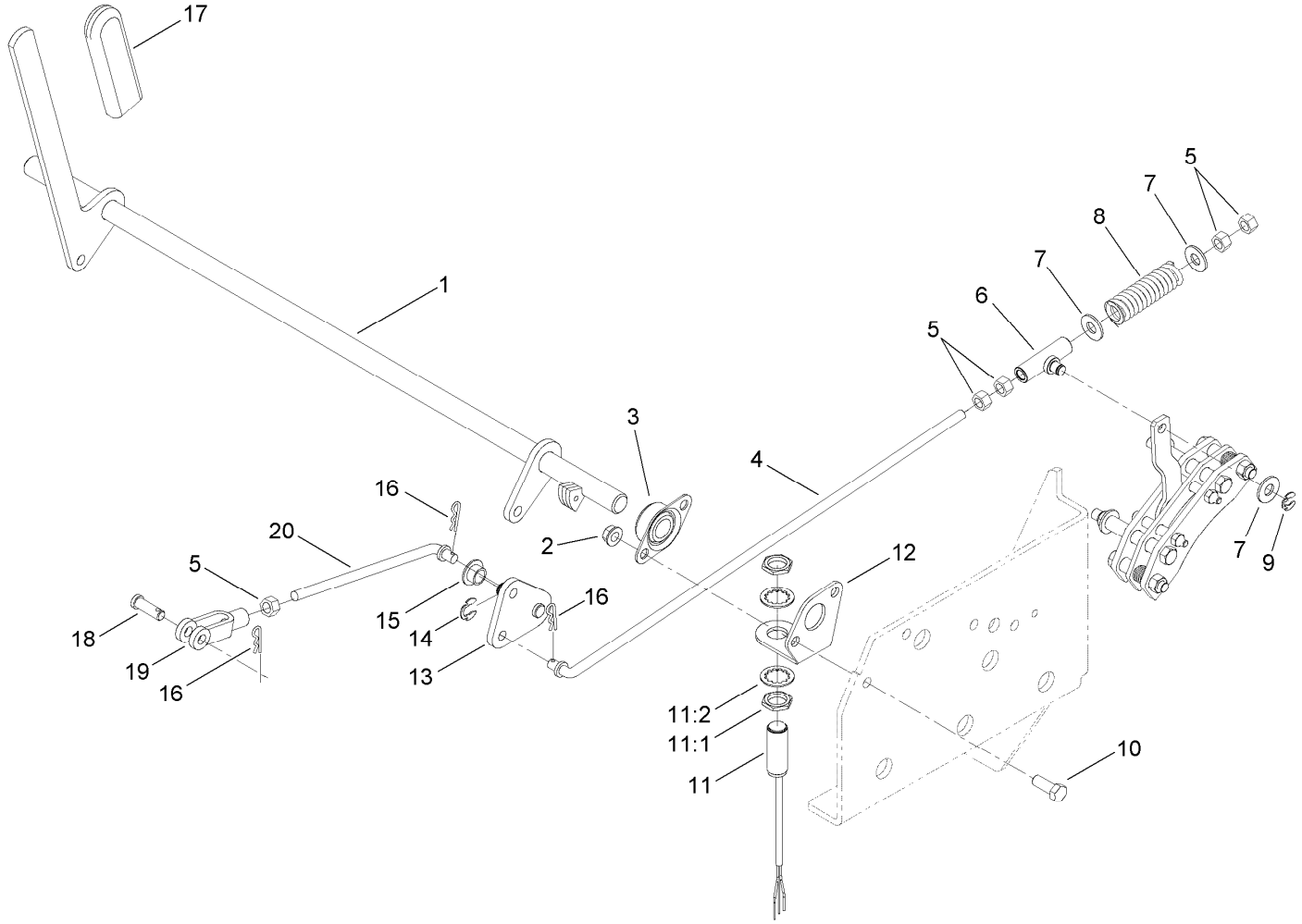


# Brake Handle Assembly

| Ref. | Part Number | Qty. | Description |
|---|---|---|---|
| 1 | 140-7064 | 1 | Handle-Brake |
| 2 | 3290-357 | 4 | Nut-HHF, Whiz |
| 3 | 1-633102 | 2 | Bearing-Flange, Side |
| 4 | 120-0009 | 2 | Rod-Brake |
| 5 | 3219-3 | 10 | Nut-Hex |
| 6 | 132-8128 | 2 | Swivel ASM |
| 7 | 3256-4 | 6 | Washer-Flat |
| 8 | 109-2230 | 2 | Spring-Compression |
| 9 | 32151-47 | 2 | Ring-Retaining |
| 10 | 323-6 | 4 | Screw-HH |
| 11 | 115-5300 | 1 | Proximity Switch ASM |

| Ref. | Part Number | Qty. | Description |
|---|---|---|---|
| 11:1 | 117-3207 | 2 | Nut-Hex |
| 11:2 | 117-3208 | 2 | Washer-Lock, Internal Tooth |
| 12 | 117-5572 | 1 | Bracket-Switch |
| 13 | 120-0022 | 2 | Pivot-Brake |
| 14 | 32151-68 | 2 | Ring-Retaining |
| 15 | 1-513140 | 4 | Bearing-Control |
| 16 | 3290-307 | 6 | Pin-Cotter |
| 17 | 1-633268 | 1 | Grip-Lever |
| 18 | 1-808285 | 2 | Pin-Clevis |
| 19 | 1-633131 | 2 | Yoke-Linkage, Brake |
| 20 | 120-0023 | 2 | Rod-Brake |

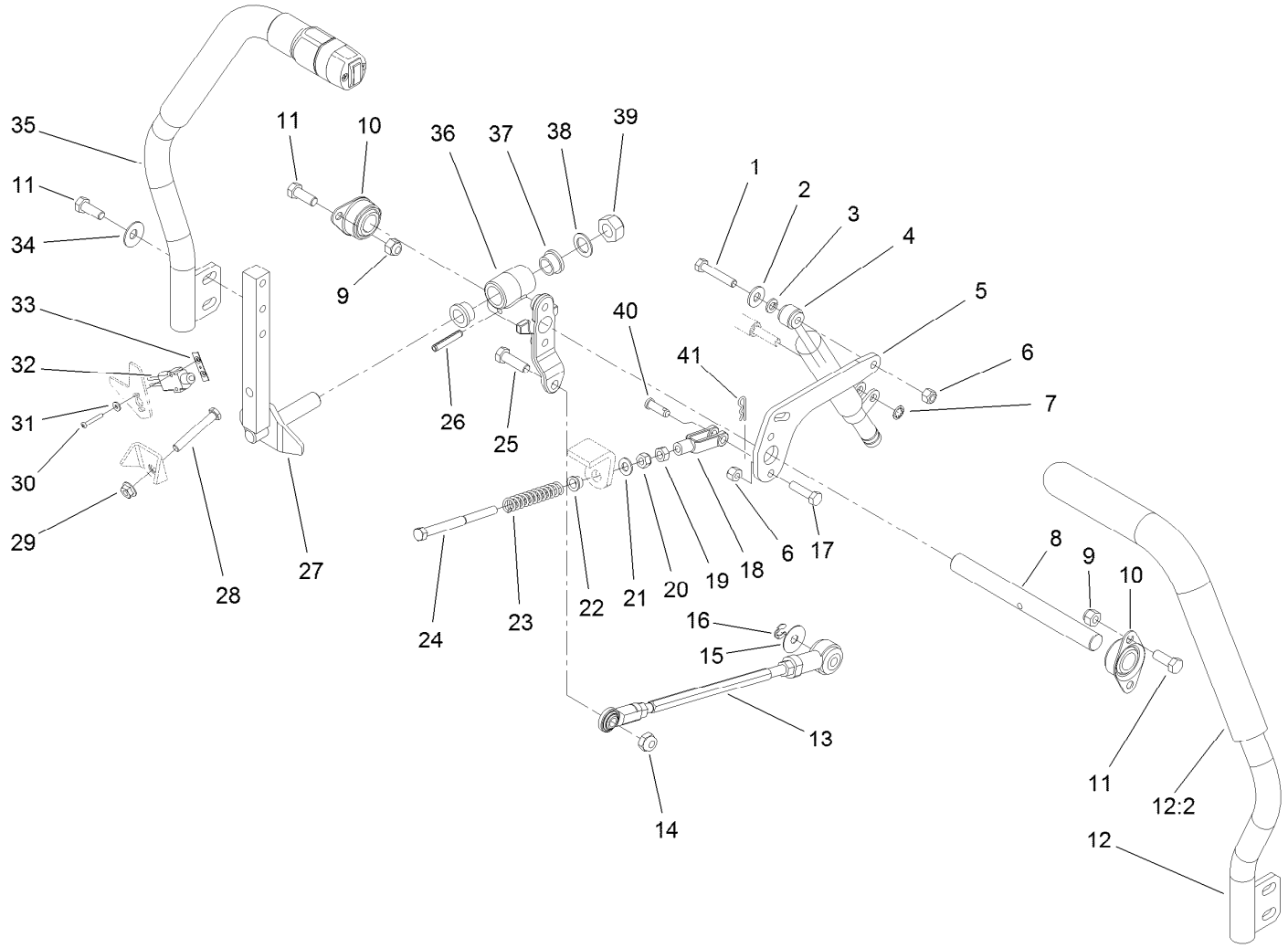


# Traction Control Assembly

| Ref. | Part Number | Qty. | Description |
|---|---|---|---|
| 1 | 322-9 | 2 | Screw-HH |
| 2 | 3256-3 | 2 | Washer-Flat |
| 3 | 3253-4 | 4 | Washer-Lock |
| 4 | 138-8207 | 2 | Damper |
| 5 | 108-9829-0P | 2 | Lever-Damper |
| 6 | 3296-29 | 6 | Nut-Lock, NI |
| 7 | 32151-72 | 2 | Ring-Retaining |
| 8 | 108-9830 | 2 | Shaft-Pivot |
| 9 | 3296-39 | 8 | Nut-Lock, NI |
| 10 | 1-633102 | 4 | Bearing-Flange, Side |
| 11 | 323-6 | 12 | Screw-HH |
| 12 | 125-2688 | 1 | LH Lever ASM |
| 12:2 | 125-2704 | 1 | Grip-Foam |
| 13 | 112-5099 | 2 | Link ASM |
| 14 | 3296-44 | 2 | Nut-Lock, NI |
| 15 | 105-6814 | 2 | Washer-Plain |
| 16 | 32151-47 | 2 | Ring-Retaining |
| 17 | 322-6 | 4 | Screw-HH |
| 18 | 1-303105 | 2 | Yoke-Adjustable |
| 19 | 3219-2 | 2 | Nut-Hex |
| 20 | 3296-4 | 2 | Nut-Lock |

| Ref. | Part Number | Qty. | Description |
|---|---|---|---|
| 21 | 3256-23 | 2 | Washer-Plain |
| 22 | 1-603735 | 2 | Bushing-Flanged |
| 23 | 1-603807 | 2 | Spring-Return, Neutral |
| 24 | 1-603737 | 2 | Bolt-Return, Neutral |
| 25 | 323-7 | 2 | Screw-HH |
| 26 | 32121-15 | 2 | Pin-Roll |
| 27 | 108-9833-03 | 2 | Lever |
| 28 | 9114524 | 2 | Bolt-TAP, HH |
| 29 | 32128-26 | 2 | Nut-Flange |
| 30 | 3250-35 | 4 | Screw-PPH |
| 31 | 3256-53 | 4 | Washer-Flat |
| 32 | 99-3410 | 2 | Switch |
| 33 | 108-9824 | 2 | Nut-Switch |
| 34 | 3290-461 | 4 | Washer-Spring |
| 35 | 125-2687 | 1 | RH Lever ASM |
| 36 | 108-9831 | 2 | Hub-Control |
| 37 | 105-3455 | 4 | Bushing |
| 38 | 105-3481 | 4 | Washer-Thrust |
| 39 | 32152-6 | 2 | Nut-Lock, Cone |
| 40 | 283-1 | 2 | Pin-Clevis |
| 41 | 3290-307 | 2 | Pin-Cotter |

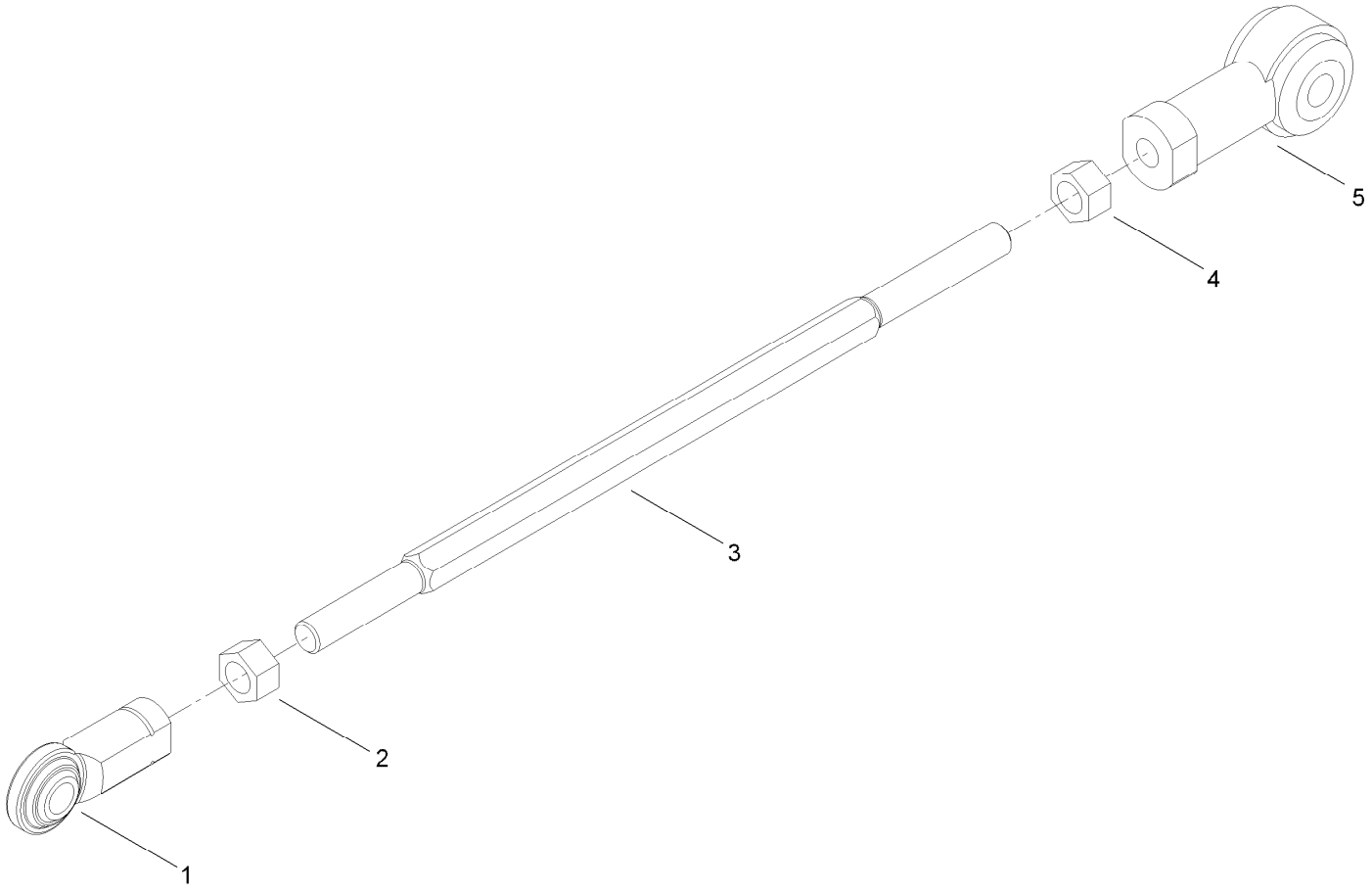


# Link Assembly No. 112-5099

| Ref. | Part Number | Qty. | Description |
|---|---|---|---|
| 1 | 103-1167 | 1 | Joint-Ball End, LH |
| 2 | 3219-20 | 1 | Nut-Hex, LH |
| 3 | 105-7239 | 1 | Rod-Threaded |
| 4 | 3219-3 | 1 | Nut-Hex |
| 5 | 105-7199 | 1 | End-Rod, Isolated |

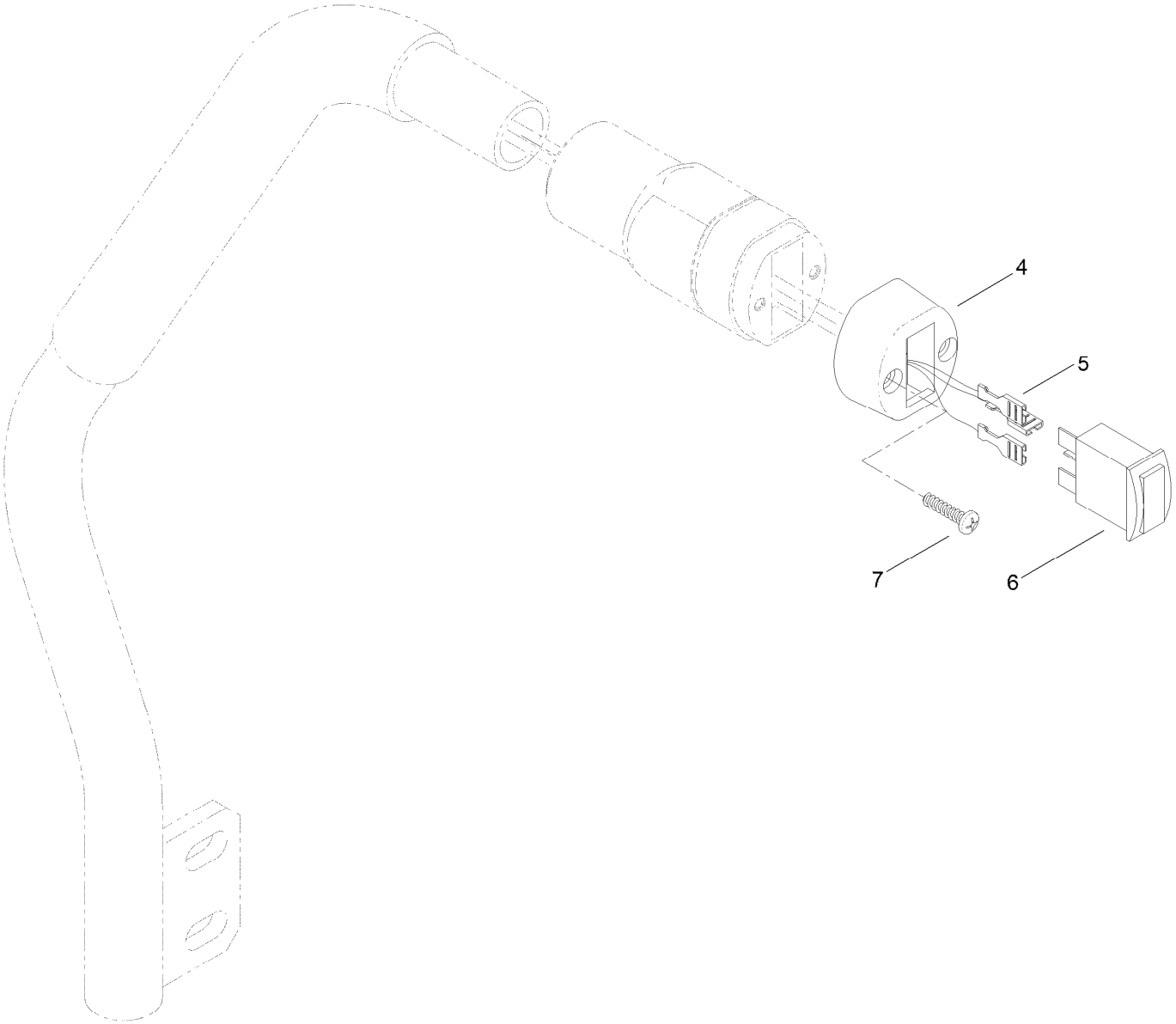


# RH Lever Assembly No. 125-2687

| *Ref.* | *Part Number* | *Qty.* | *Description* |
|---|---|---|---|
| 4 | 121-3399 | 1 | Cap-Switch |
| 5 | 119-4382 | 1 | Harness-Control Handle |
| 6 | 125-2702 | 1 | Switch, Spst (On)-Off-On |
| 7 | 94-4496 | 2 | Screw-PPH |

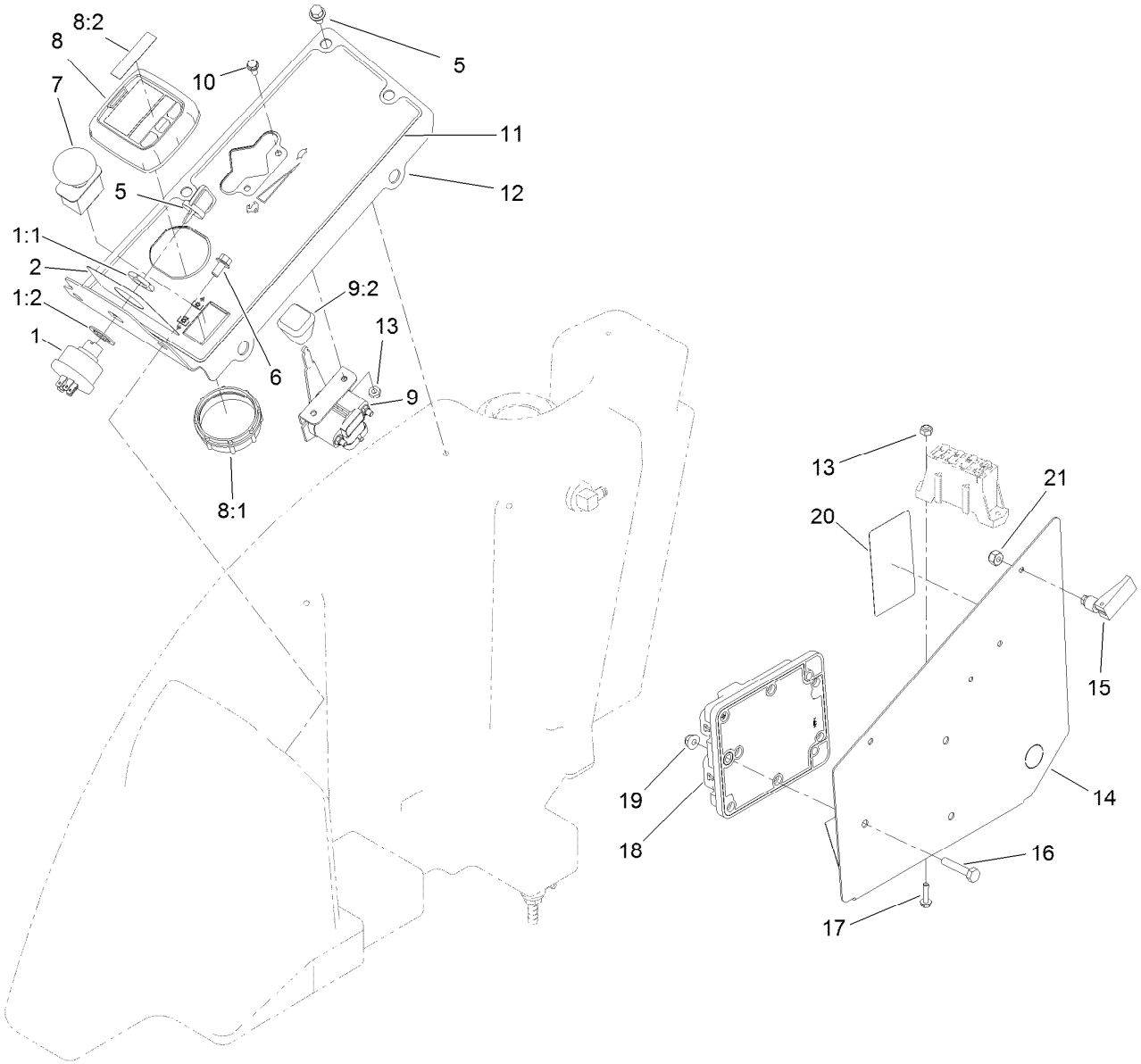


# Control Panel Assembly

| Ref. | Part Number | Qty. | Description |
|---|---|---|---|
| 1 | 104-2541 | 1 | Ignition Switch ASM |
| 1:1 | 218-461 | 1 | Nut-HH |
| 1:2 | 3254-5 | 1 | Washer-Lock |
| 2 | 110-8254 | 1 | Decal-Start, Control Panel |
| 5 | 63-8360 | 2 | Key-Ignition |
| 6 | 3234-13 | 5 | Screw-HHF |
| 7 | 93-9999 | 1 | Switch-PTO |
| 8 | 120-6310 | 1 | LCD Display ASM |
| 8:1 | 120-4630 | 1 | Nut-Display |
| 8:2 | 120-6311 | 1 | Decal-Display |
| 9 | 122-0111 | 1 | Throttle-Electronic |
| 9:2 | 66-0120 | 1 | Knob |

| Ref. | Part Number | Qty. | Description |
|---|---|---|---|
| 10 | 3290-321 | 2 | Screw-HWH |
| 11 | 121-3363 | 1 | Decal-Panel, Control |
| 12 | 121-3362-03 | 1 | Panel-Control |
| 13 | 3296-2 | 4 | Nut-Lock, NI |
| 14 | 138-8231-03 | 1 | Cover-Panel, Control |
| 15 | 74-5950 | 2 | Latch-Swell |
| 16 | 321-13 | 3 | Screw-HH |
| 17 | 32105-13 | 2 | Screw-HWH |
| 18 | 106-9277 | 1 | Module-Control, Standard |
| 19 | 104-7201 | 3 | Nut-HF |
| 20 | 110-9796 | 1 | Decal-Block, Fuse |
| 21 | 1-804254 | 2 | Nut-Lock, HH |

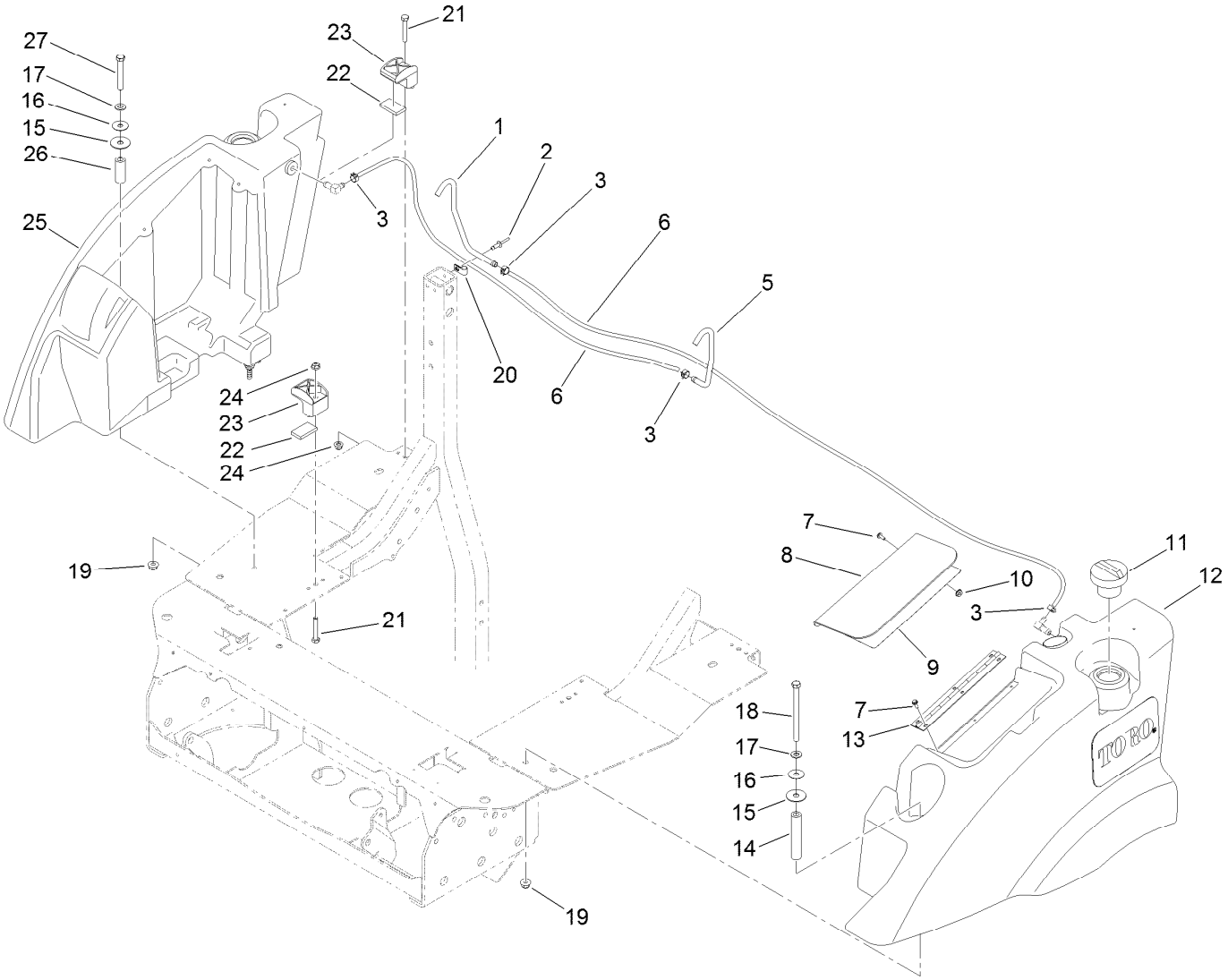


# Left-Hand and Right-Hand Fuel Tank Assembly

| Ref. | Part Number | Qty. | Description |
|---|---|---|---|
| 1 | 110-8260 | 1 | Tube-Vent, RH |
| 2 | 3290-412 | 2 | Rivet-Blind |
| 3 | 92-2379 | 4 | Clamp-Hose |
| 5 | 110-8261 | 1 | Tube-Vent, LH |
| 6 | 109-0309 | 2 | Hose-Fuel |
| 7 | 112-6349 | 6 | Screw-HWH |
| 8 | 110-5540-03 | 1 | Cover-Toolbox |
| 9 | 144-7258 | 1 | Decal-Service Instructions |
| 10 | 32149-8 | 3 | Nut-Keps |
| 11 | 125-9170 | 2 | Cap-Fuel, Diesel (Ultra Low Sulfur) |
| 12 | 131-5509 | 1 | LH Fuel Tank ASM |
| 13 | 108-2024 | 1 | Hinge |
| 14 | 110-5539 | 1 | Spacer |
| 15 | 95-1905 | 2 | Washer-Rubber |
| 16 | 105-6814 | 2 | Washer-Plain |
| 17 | 3256-24 | 2 | Washer-Flat |
| 18 | 323-39 | 1 | Screw-HH |
| 19 | 104-8301 | 2 | Nut-HF, NI |
| 20 | 2412-89 | 2 | Clamp-R |
| 21 | 322-10 | 4 | Screw-HH |
| 22 | 112-9561 | 4 | Pad-Foam |
| 23 | 107-4543 | 4 | Clamp |
| 24 | 104-8300 | 4 | Nut-HF, NI |
| 25 | 132-8116 | 1 | RH Fuel Tank ASM |
| 26 | 92-1239 | 1 | Spacer-Support |
| 27 | 323-13 | 1 | Screw-HH |

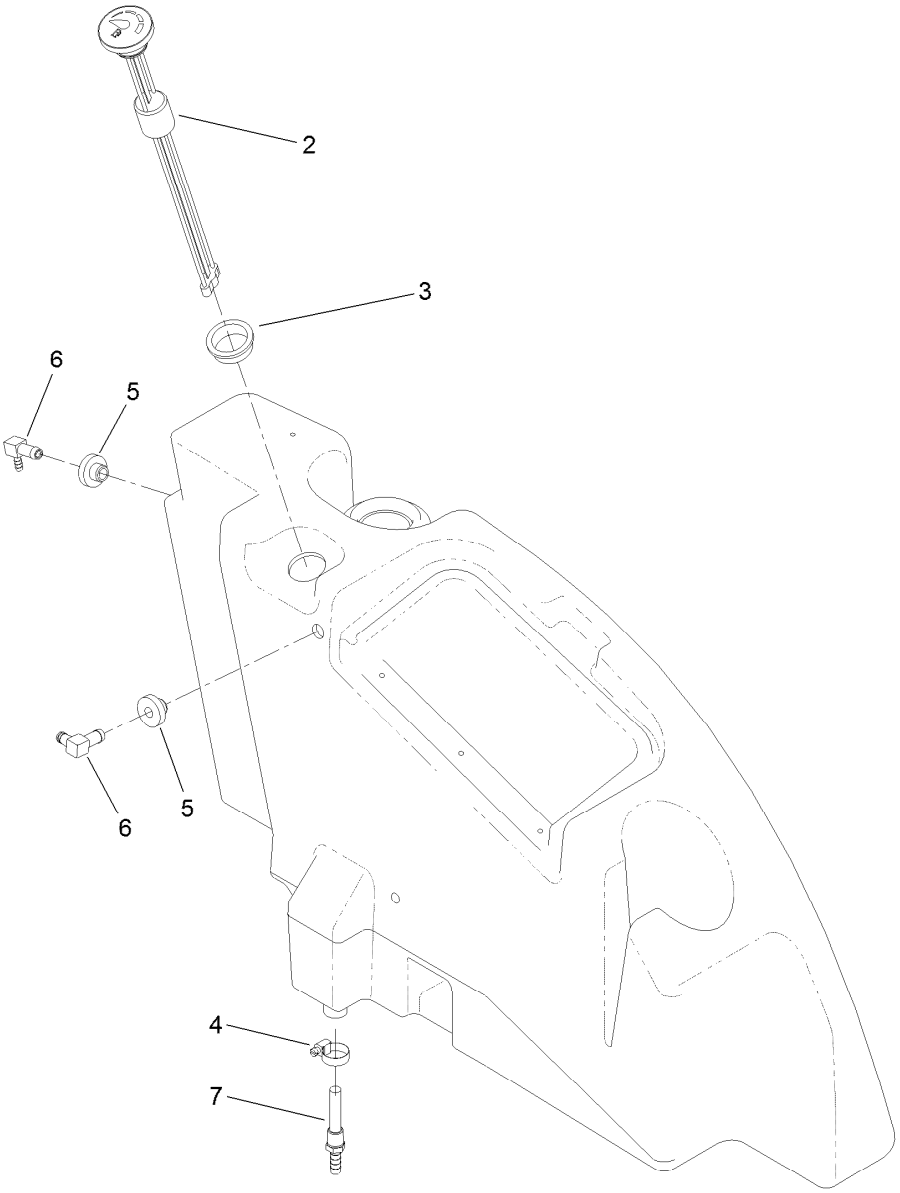


# LH Fuel Tank Assembly No. 131-5509

| *Ref.* | *Part Number* | *Qty.* | *Description* |
|---|---|---|---|
| 2 | 110-8262 | 1 | Gauge-Fuel |
| 3 | 95-8972 | 1 | Grommet |
| 4 | 2412-36 | 1 | Clamp-Hose |
| 5 | 46-6560 | 2 | Bushing |
| 6 | 1-643259 | 2 | Fitting-Elbow |
| 7 | 112-6374 | 1 | Fitting-Strainer |

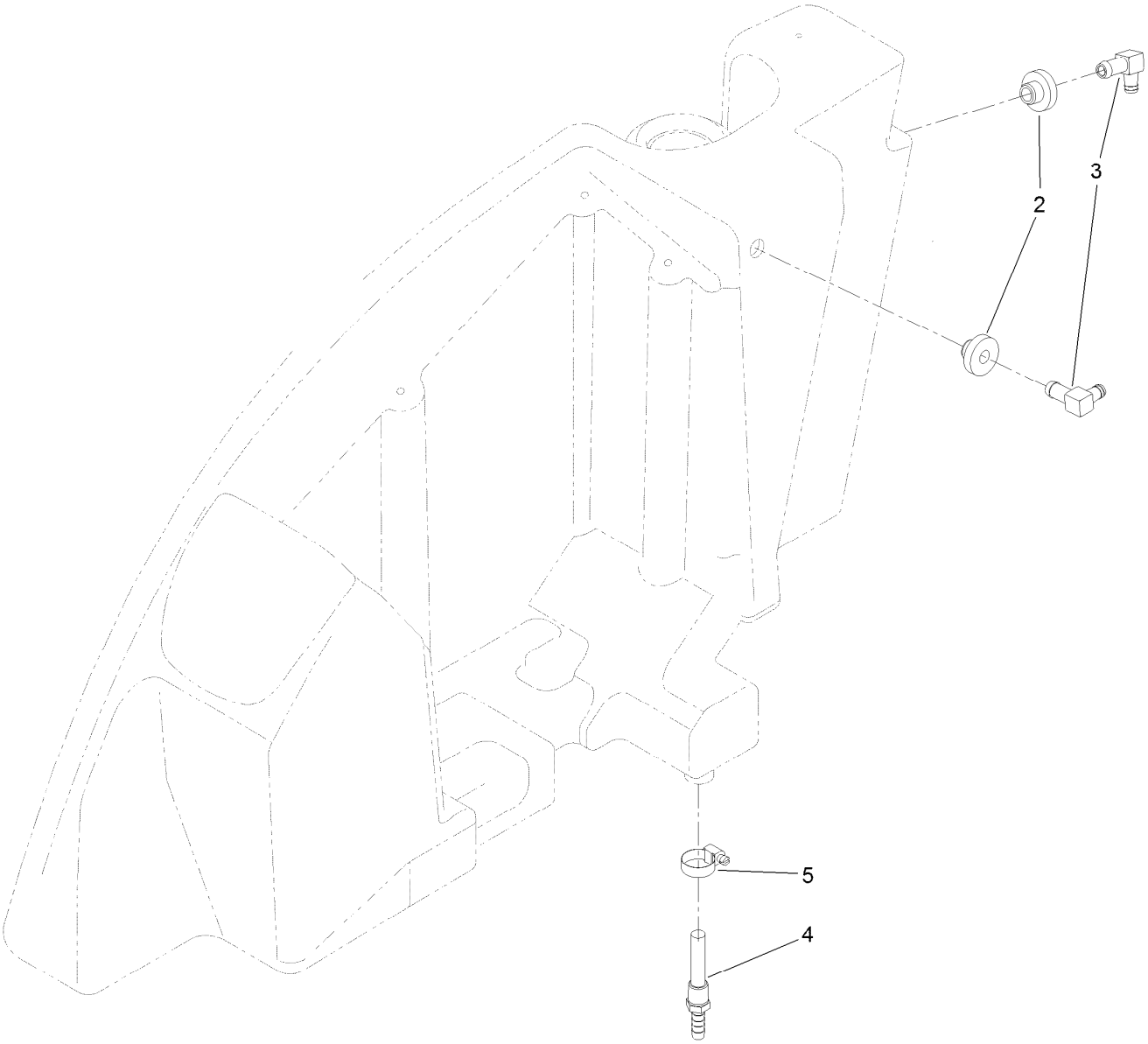


# RH Fuel Tank Assembly No. 132-8116

| *Ref.* | *Part Number* | *Qty.* | *Description* |
|---|---|---|---|
| 2 | 46-6560 | 2 | Bushing |
| 3 | 1-643259 | 2 | Fitting-Elbow |
| 4 | 112-6374 | 1 | Fitting-Strainer |
| 5 | 2412-36 | 1 | Clamp-Hose |

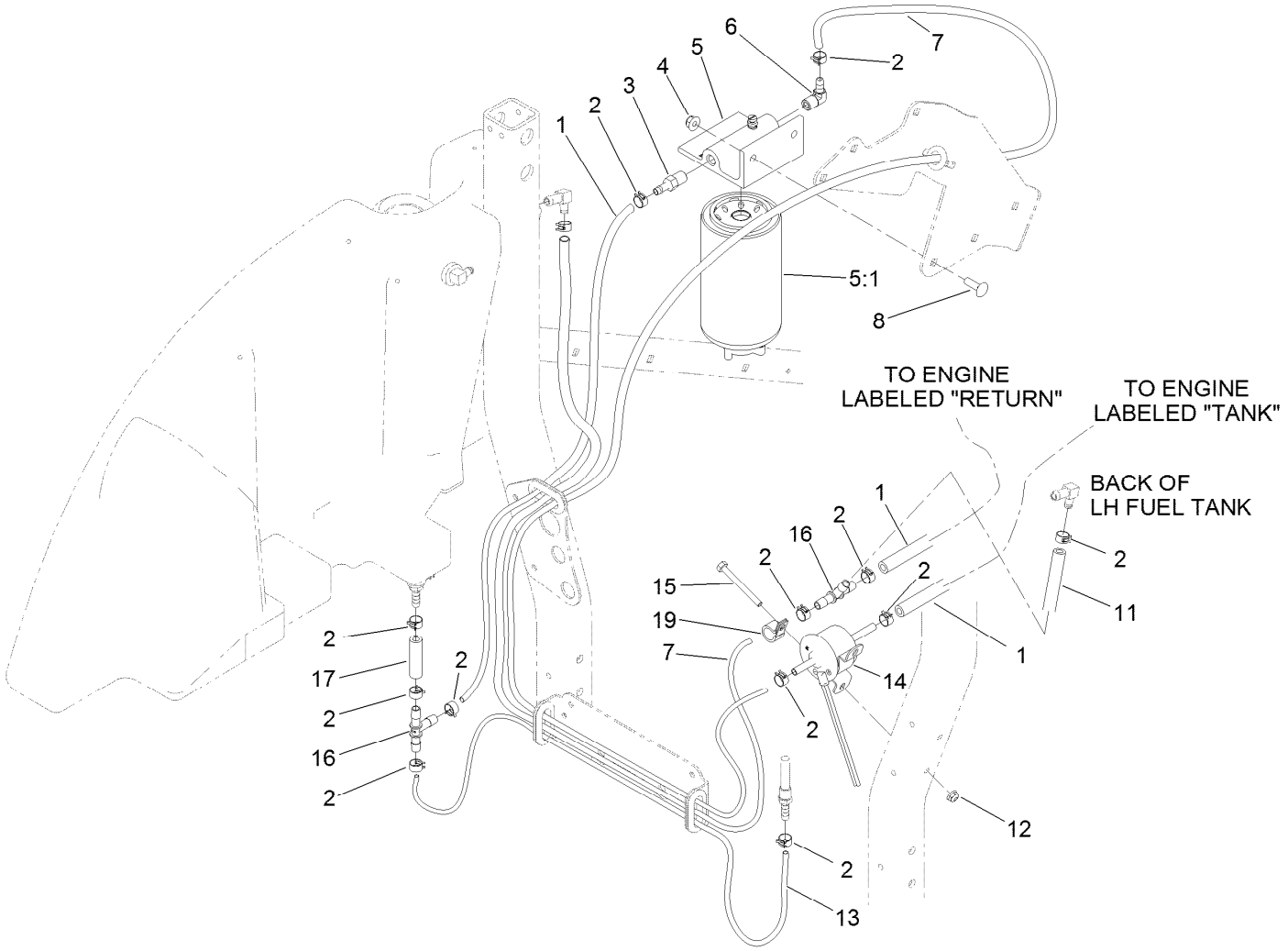


# Fuel System Assembly

| Ref. | Part Number | Qty. | Description |
|---|---|---|---|
| 1 | 110-6187 | 3 | Hose-Fuel |
| 2 | 92-2379 | 16 | Clamp-Hose |
| 3 | 353-783 | 1 | Fitting-STR |
| 4 | 104-8300 | 2 | Nut-HF, NI |
| 5 | 125-2914 | 1 | Filter-Separator |
| 5:1 | 125-2915 | 1 | Filter-Fuel/Water Separator |
| 6 | 353-781 | 1 | Fitting-HYD, 90 |
| 7 | 110-4108 | 2 | Hose-Fuel |
| 8 | 3230-22 | 2 | Screw-CARR |

| Ref. | Part Number | Qty. | Description |
|---|---|---|---|
| 11 | 109-0274 | 1 | Hose-Fuel |
| 12 | 104-7201 | 2 | Nut-HF |
| 13 | 110-3258 | 1 | Hose-Fuel |
| 14 | 121-5613 | 1 | Pump-Fuel, Electric |
| 15 | 321-15 | 2 | Screw-HH |
| 16 | 354-107 | 2 | Fitting-HYD, Tee |
| 17 | 127-6453 | 1 | Hose-Fuel |
| 19 | 2412-87 | 1 | Clamp-Cable |

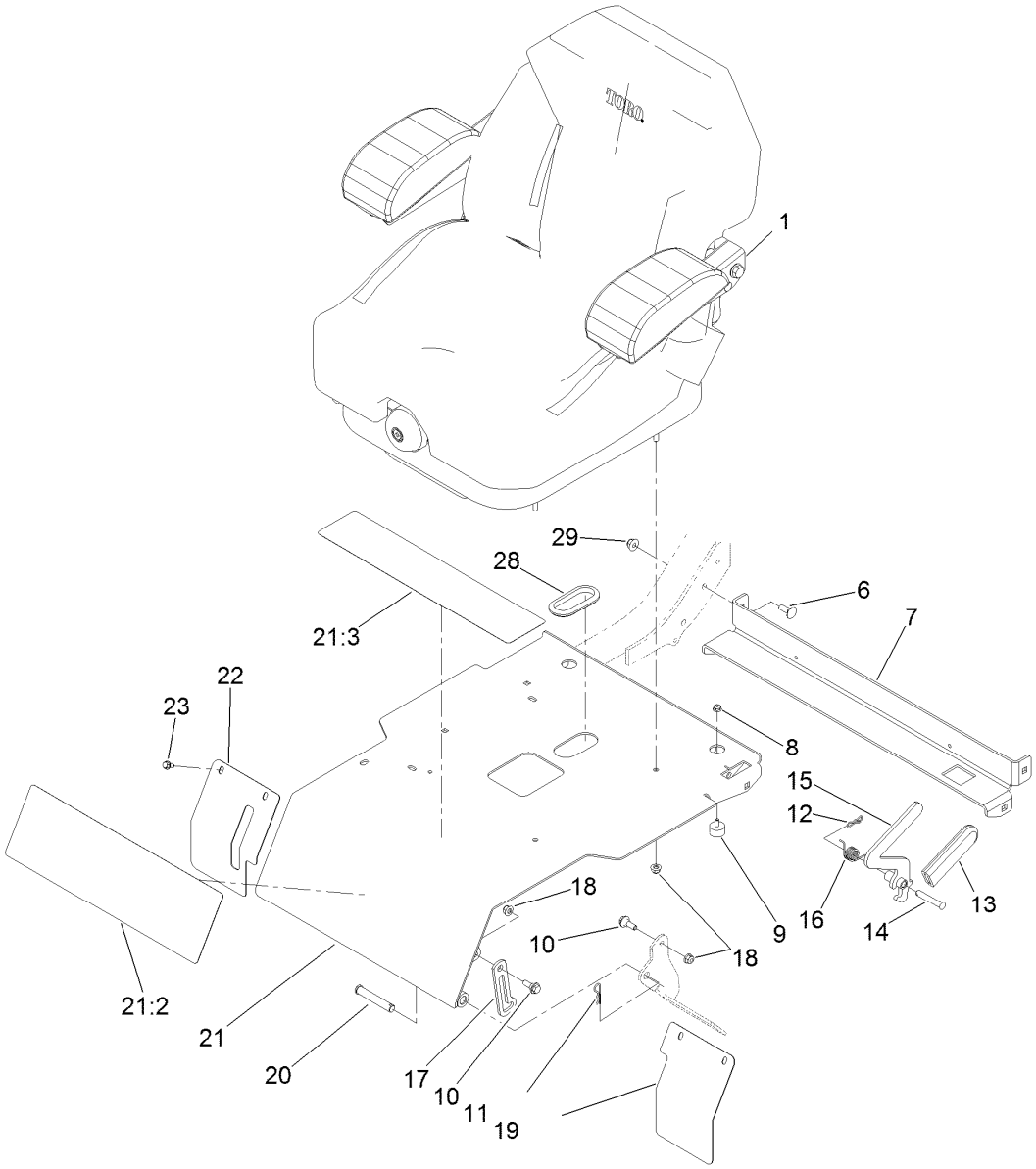


# Seat and Seat Plate Assembly

| Ref. | Part Number | Qty. | Description |
|---|---|---|---|
| 1 | 125-3107 | 1 | Suspension Seat ASM |
| 6 | 3231-2 | 4 | Bolt-CARR |
| 7 | 120-0095-03 | 1 | Support-Seat |
| 8 | 104-7201 | 2 | Nut-HF |
| 9 | 240-14 | 2 | Bumper-Rubber |
| 10 | 116-2670 | 2 | Screw-Shoulder |
| 11 | 3290-467 | 2 | Pin-Hair |
| 12 | 119-1415 | 1 | Pin-Cotter, Locking |
| 13 | 1-633268 | 1 | Grip-Lever |
| 14 | 138-8239 | 1 | Pin-Clevis |
| 15 | 140-7053 | 1 | Lever-Seat |
| 16 | 121-3386 | 1 | Spring-Torsion |

| Ref. | Part Number | Qty. | Description |
|---|---|---|---|
| 17 | 130-8754 | 1 | Prop-Seat |
| 18 | 104-8300 | 6 | Nut-HF, NI |
| 19 | 130-8767-03 | 1 | Cover-LH |
| 20 | 283-55 | 2 | Pin-Clevis |
| 21 | 130-8749 | 1 | Plate-Seat |
| 21:2 | 120-9195 | 1 | Decal-Safety |
| 21:3 | 120-9196 | 1 | Decal-Console, Top (CE) |
| 22 | 130-8768-03 | 1 | Cover-RH |
| 23 | 32144-10 | 4 | Screw-HWH |
| 28 | 237-164 | 1 | Grommet |
| 29 | 104-8301 | 4 | Nut-HF, NI |

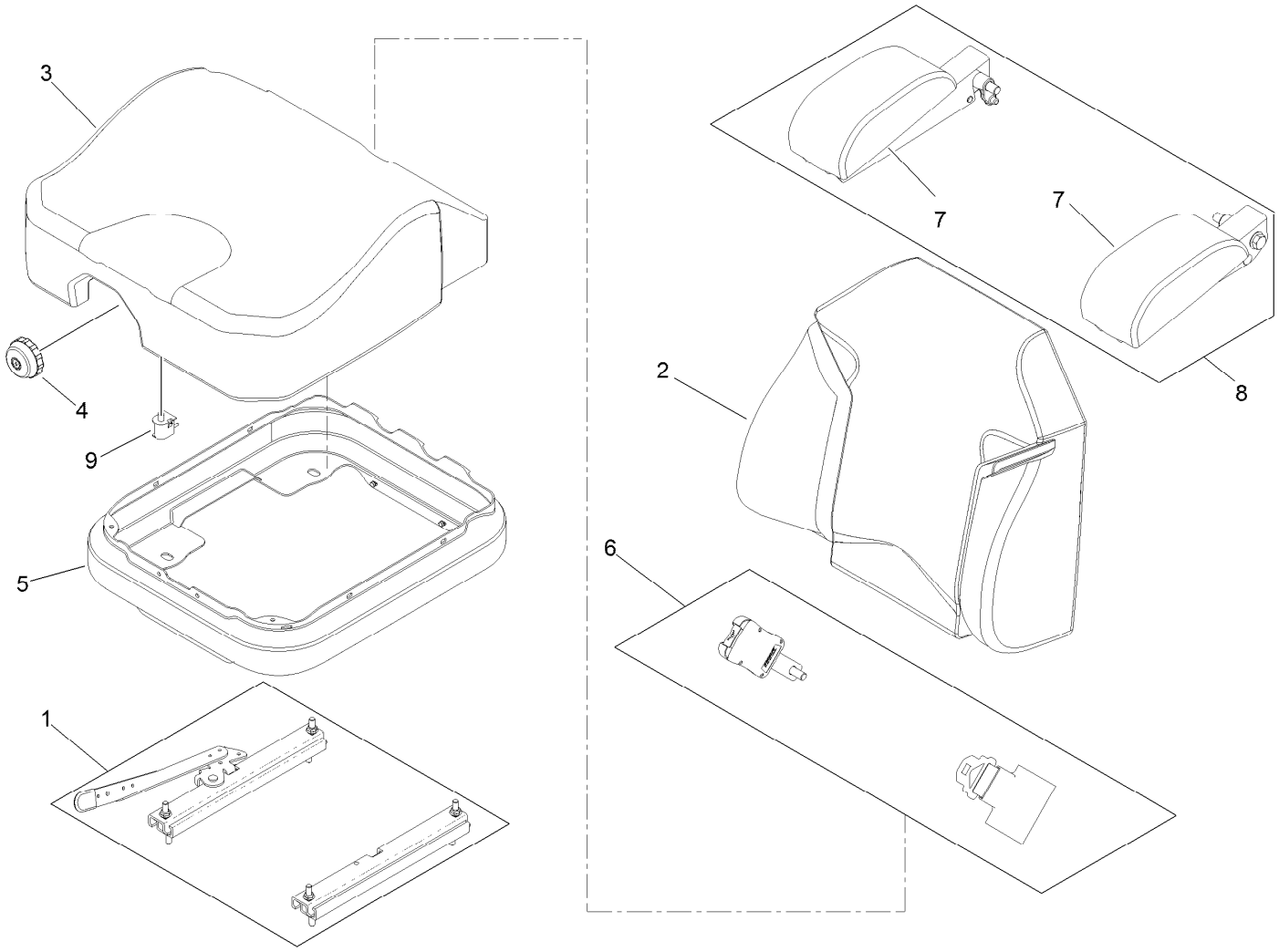


# Seat Assembly No. 125-3107

| *Ref.* | *Part Number* | *Qty.* | *Description* |
|---|---|---|---|
| 1 | 116-8910 | 1 | Seat Track Set |
| 2 | 125-3112 | 1 | Cover-Back |
| 3 | 125-3111 | 1 | Cover-Cushion |
| 4 | 116-8911 | 1 | Knob-Adjuster |
| 5 | 116-5659 | 1 | Cover-Suspension Bellows |
| 6 | 126-2061 | 1 | Seat Belt Service Kit |
| 7 | 109-9802 | 1 | Arm Rest Pad Set |
| 8 | 109-9803 | 1 | Arm Rest Set |
| 9 | 82-2190 | 1 | Switch-Bail |

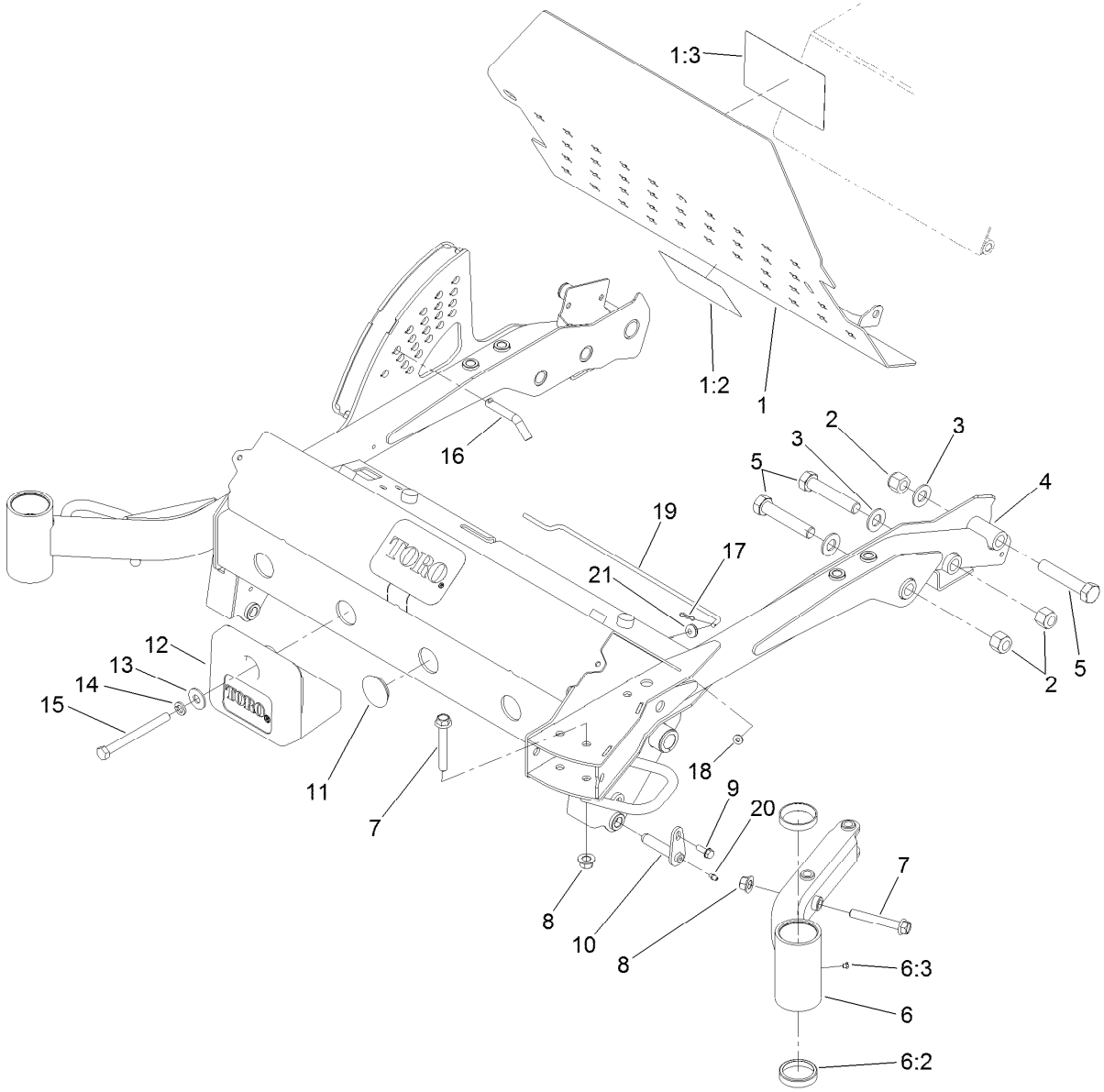


# Floorplate and Carrier Frame Assembly

| Ref. | Part Number | Qty. | Description |
|---|---|---|---|
| 1 | 120-9165 | 1 | Floorplate ASM |
| 1:2 | 112-1461 | 1 | Decal-Routing, Belt |
| 1:3 | 107-1866 | 1 | Decal-Danger, Slope |
| 2 | 3296-51 | 5 | Nut-Lock, NI |
| 3 | 92-5836 | 5 | Washer |
| 4 | 136-4466 | 1 | Carrier Frame ASM |
| 5 | 328-7 | 5 | Screw-HH |
| 6 | 121-3340 | 1 | Castor Arm ASM |
| 6:2 | 254-107 | 2 | Cup-Bearing, Tapered |
| 6:3 | 1-811010 | 1 | Plug |
| 7 | 114-8419 | 3 | Screw-HHF |
| 8 | 99-5107 | 3 | Nut-Lock |
| 9 | 32144-41 | 2 | Screw-Taptite |
| 10 | 112-1602 | 2 | Pin-Retainer |
| 11 | 121-3397 | 2 | Plug-Grommet |
| 12 | 125-2655-03 | 2 | Weight |
| 13 | 3256-6 | 2 | Washer-Flat |
| 14 | 3253-7 | 2 | Washer-Lock |
| 15 | 325-22 | 2 | Screw-HH |
| 16 | 112-9544 | 1 | Pin-HOC |
| 17 | 119-1414 | 1 | Pin-Cotter, Locking |
| 18 | 3256-22 | 1 | Washer-Flat |
| 19 | 110-9847 | 1 | Rod-Prop |
| 20 | 302-5 | 2 | Fitting-Grease |
| 21 | 237-141 | 1 | Grommet-Rubber |

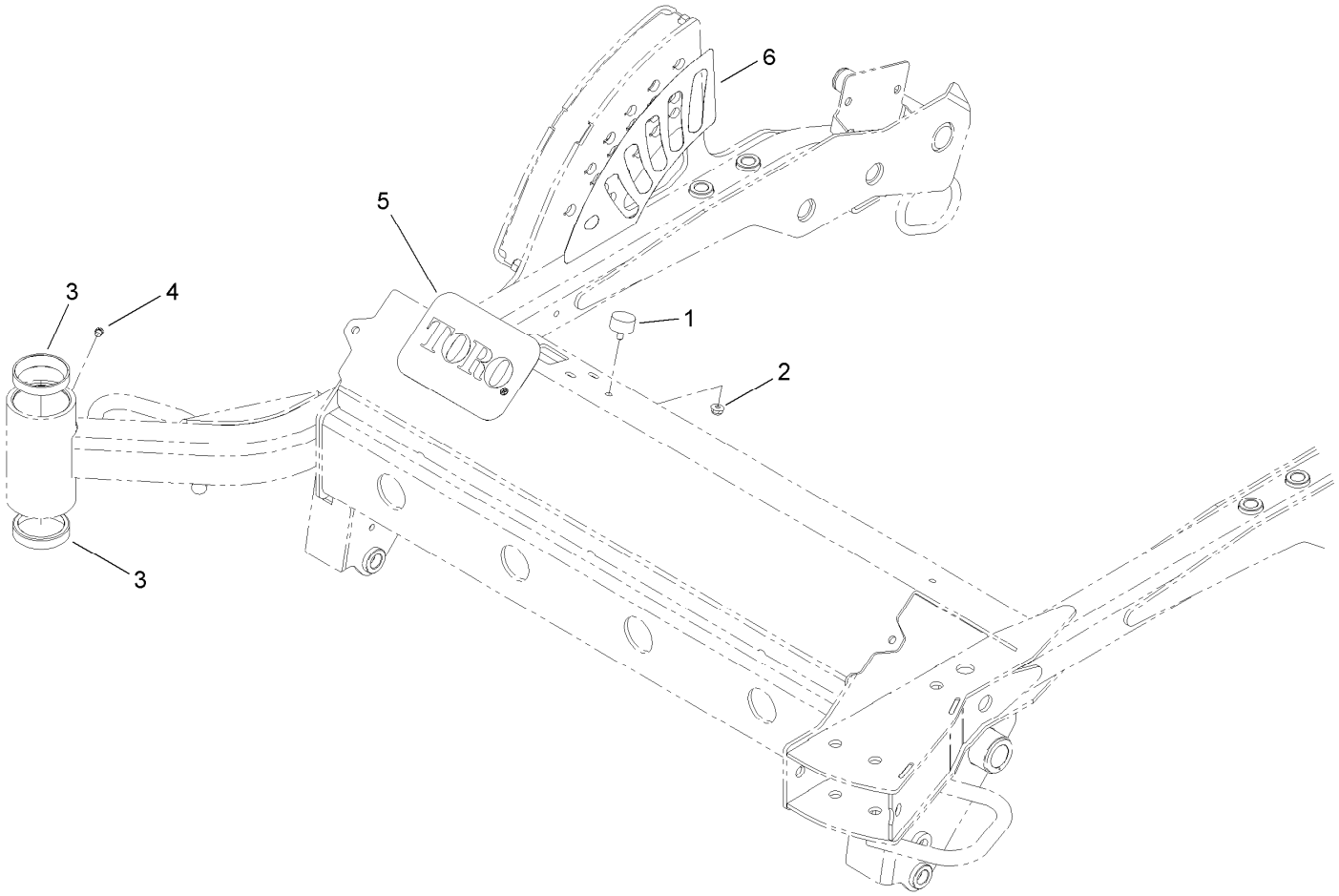


# Carrier Frame Assembly No. 136-4466

| *Ref.* | *Part Number* | *Qty.* | *Description* |
|---|---|---|---|
| 1 | 240-14 | 4 | Bumper-Rubber |
| 2 | 104-7201 | 4 | Nut-HF |
| 3 | 254-107 | 2 | Cup-Bearing, Tapered |
| 4 | 1-811010 | 1 | Plug |
| 5 | 99-4693 | 1 | Decal |
| 6 | 127-6519 | 1 | Decal-HOC |

# Lift Valve and Cylinder Assembly

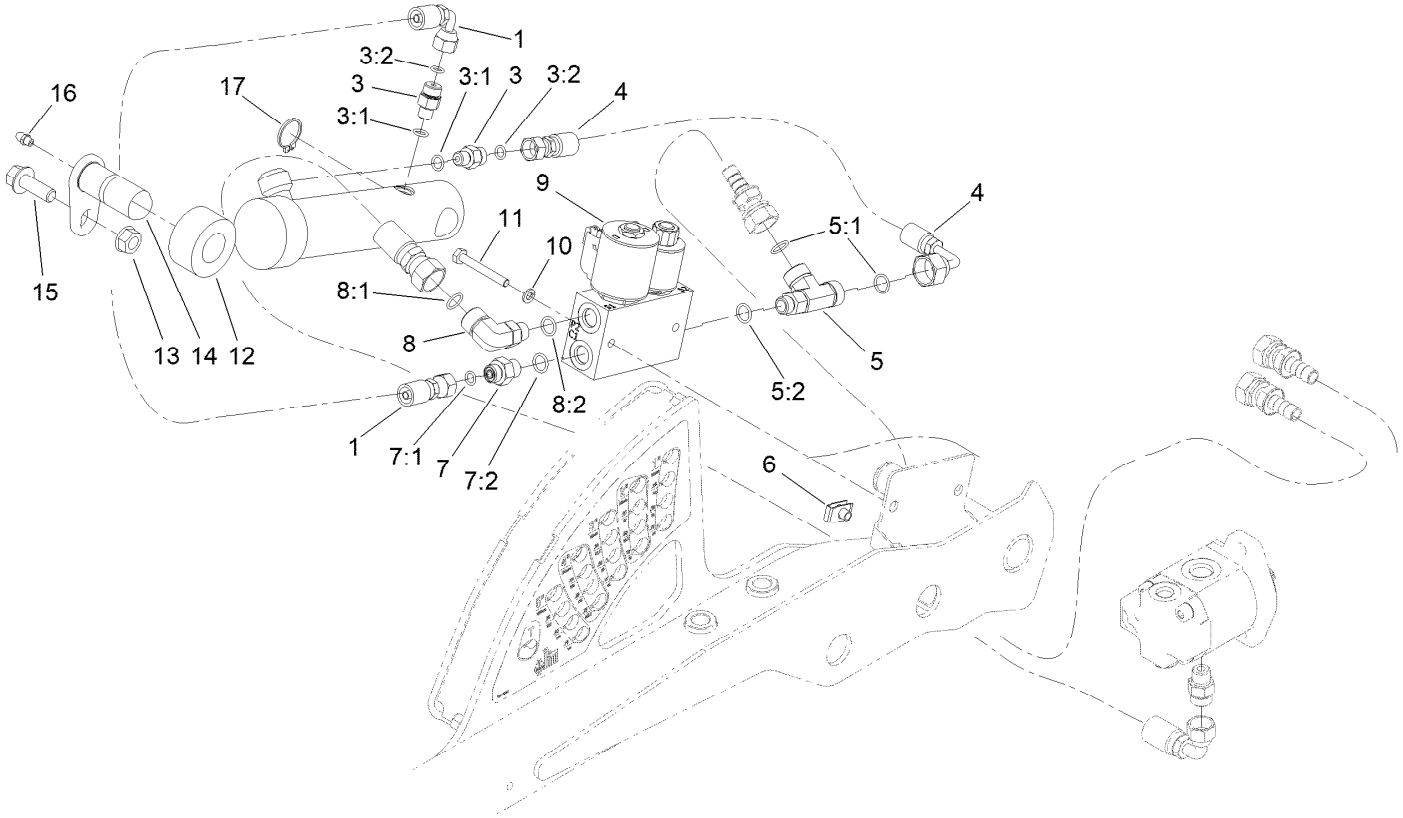

# Lift Valve and Cylinder Assembly (continued)

| Ref. | Part Number | Qty. | Description |
|---|---|---|---|
| 1 | 127-4908 | 1 | Hose-HYD |
| 3 | 340-92 | 2 | Fitting-Straight |
| 3:1 | 237-78 | 1 | O-Ring |
| 3:2 | 237-21 | 1 | O-Ring |
| 4 | 127-4909 | 1 | Hose-HYD |
| 5 | 110-0064 | 1 | Fitting-Tee |
| 5:1 | 237-30 | 2 | O-Ring |
| 5:2 | 237-42 | 1 | O-Ring |
| 6 | 107069 | 2 | Clip |
| 7 | 340-1 | 1 | Fitting-Straight |
| 7:1 | 237-21 | 1 | O-Ring |
| 7:2 | 237-42 | 1 | O-Ring |

| Ref. | Part Number | Qty. | Description |
|---|---|---|---|
| 8 | 340-99 | 1 | Fitting-HYD, 90 DEG |
| 8:1 | 237-30 | 1 | O-Ring |
| 8:2 | 237-42 | 1 | O-Ring |
| 9 | 131-1934 | 1 | Deck Lift Valve ASM |
| 10 | 3253-3 | 2 | Washer-Lock |
| 11 | 321-11 | 2 | Screw-HH |
| 12 | 110-9834 | 1 | HYD Cylinder ASM |
| 13 | 32128-37 | 1 | Nut-HF |
| 14 | 125-1910 | 1 | Pin-Pivot |
| 15 | 3234-15 | 1 | Screw-HHF |
| 16 | 302-5 | 1 | Fitting-Grease |
| 17 | 32151-36 | 1 | Ring-Retaining |

# Valve Assembly No. 131-1934

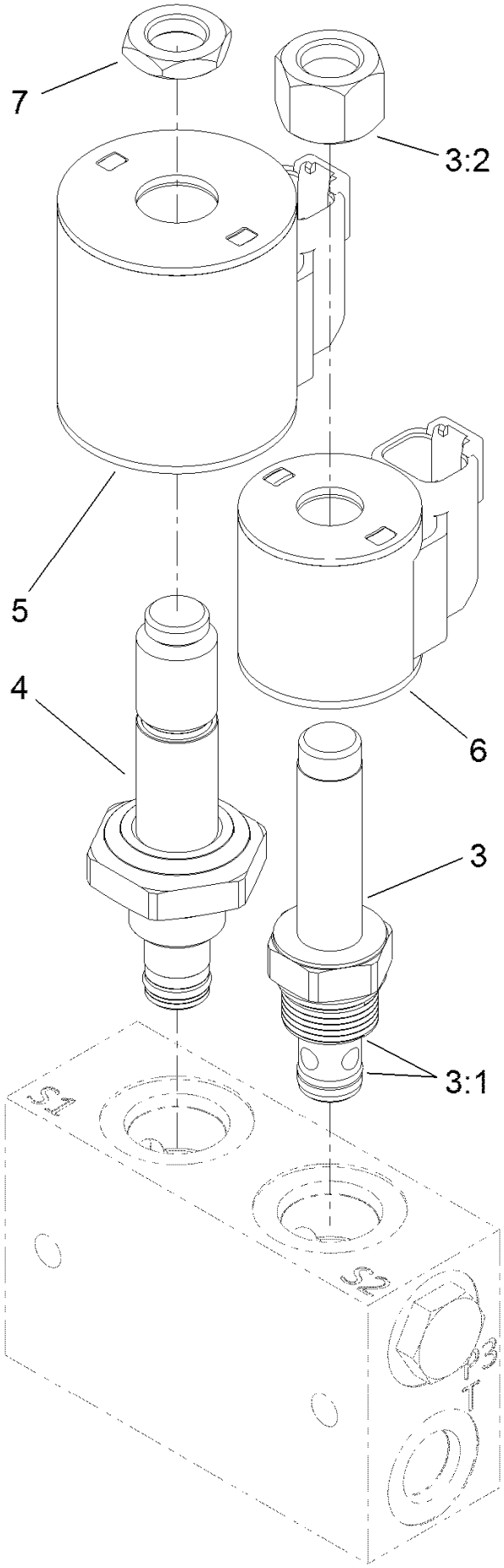

# Valve Assembly No. 131-1934 (continued)

| Ref. | Part Number | Qty. | Description |
|---|---|---|---|
| 3 | 107-7517 | 1 | Valve-Solenoid |
| 3:1 | 105-9156 | 1 | Seal Kit |
| 3:2 | 107-7812 | 1 | Nut-Solenoid |
| 4 | 131-1935 | 1 | Valve-Solenoid |
| 5 | 115-3021 | 1 | Coil-12V |
| 6 | 119-8036 | 1 | Coil |
| 7 | 110-2634 | 1 | Nut-Coil |

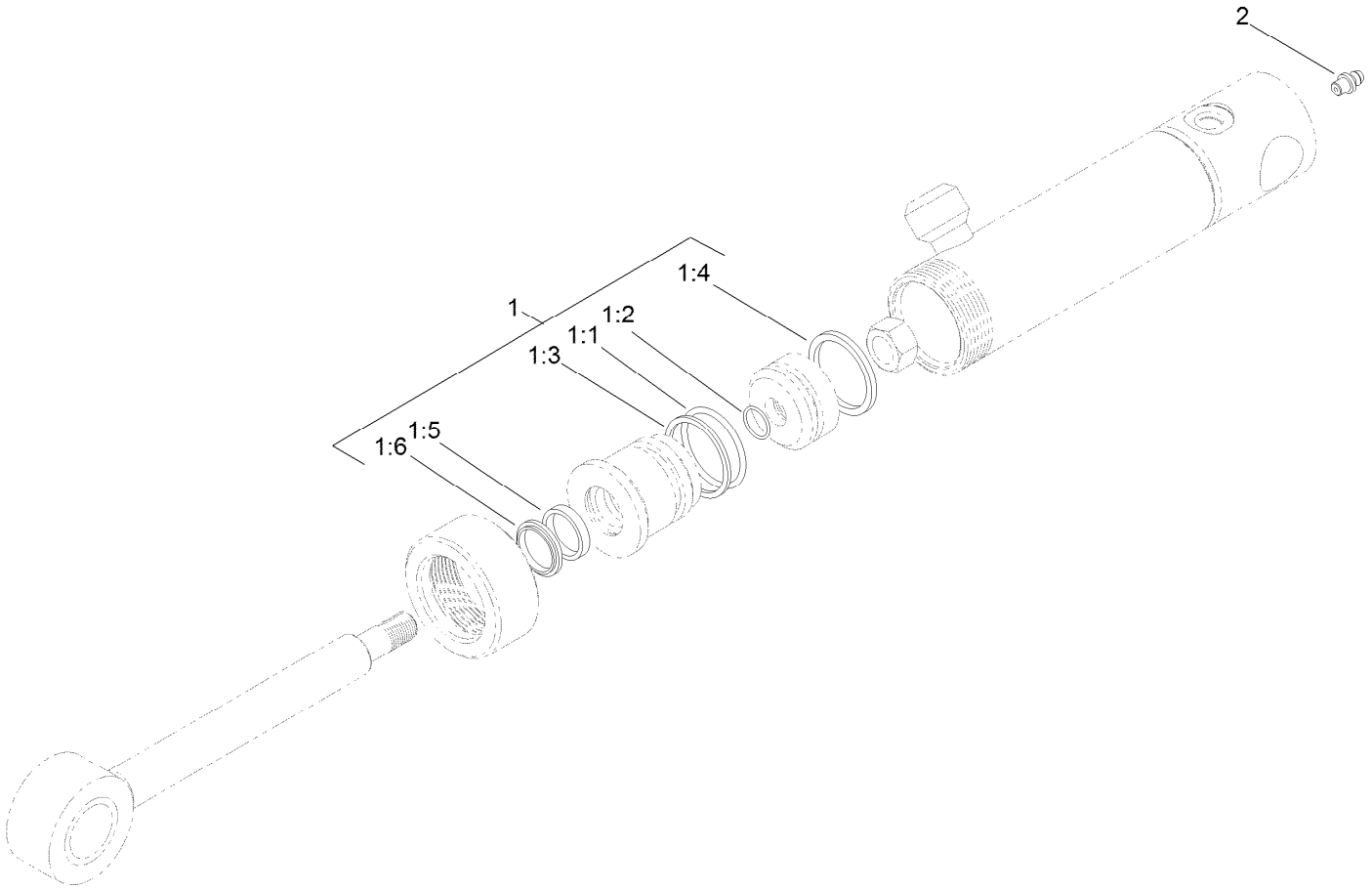


# Hydraulic Cylinder Assembly No. 110-9834

| *Ref.* | *Part Number* | *Qty.* | *Description* |
|---|---|---|---|
| 1 | 112-6353 | 1 | Seal Kit |
| 1:1 | | 1 | O-Ring ● |
| 1:2 | | 1 | O-Ring ● |
| 1:3 | | 1 | Backup ● |
| 1:4 | | 1 | Seal-Bp ● |
| 1:5 | | 1 | Seal-Rod ● |
| 1:6 | | 1 | Seal-Dust ● |
| 2 | 302-60 | 1 | Fitting-Grease |

● Not serviced separately

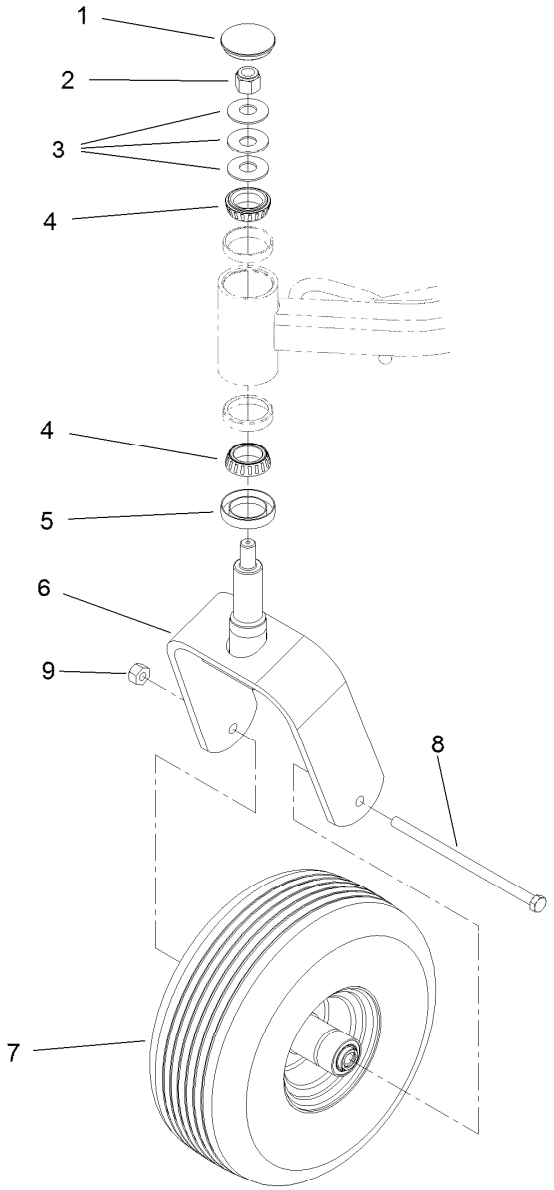


# Caster Wheel Assembly

| Ref. | Part Number | Qty. | Description |
|---|---|---|---|
| 1 | 108-9950 | 2 | Cap-Grease |
| 2 | 3296-51 | 2 | Nut-Lock, NI |
| 3 | 108-9957 | 6 | Washer-Belleville |
| 4 | 254-106 | 4 | Cone-Bearing, Tapered |
| 5 | 69-2980 | 2 | Seal |
| 6 | 108-9946-03 | 2 | Fork-Caster |
| 7 | 133-4723 | 2 | Caster Wheel ASM |
| 8 | 325-39 | 2 | Screw-HH |
| 9 | 3296-25 | 2 | Nut-Lock, NI |

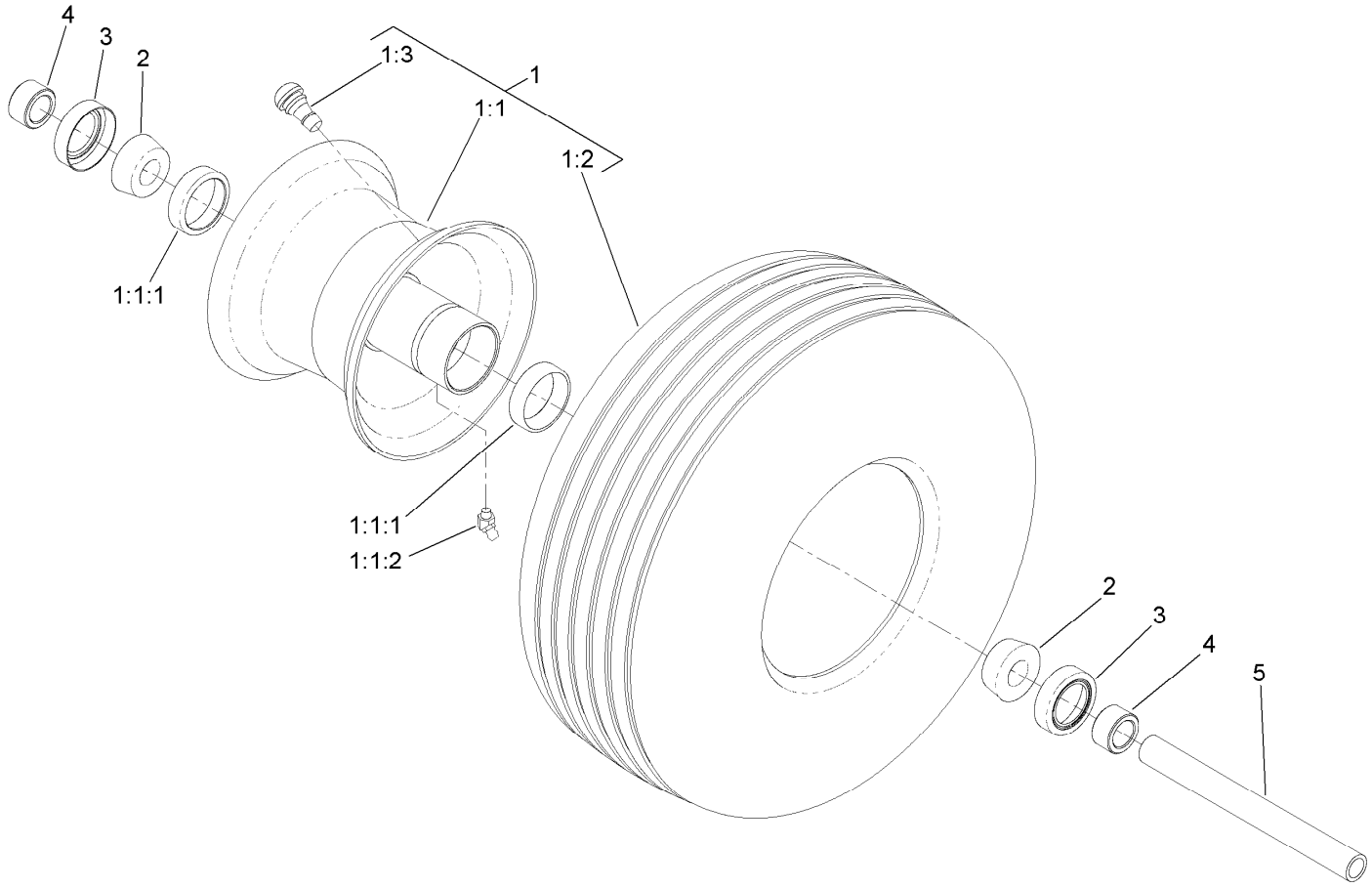


# Caster Wheel Assembly No. 133-4723

| *Ref.* | *Part Number* | *Qty.* | *Description* |
|---|---|---|---|
| 1 | 133-4730 | 1 | Tire And Wheel ASM |
| 1:1 | 133-4725 | 1 | Wheel |
| 1:1:1 | 1-633584 | 2 | Bearing-Cup |
| 1:1:2 | 302-11 | 1 | Fitting-Lube, 45 DEG |
| 1:2 | 133-4724 | 1 | Tire |
| 1:3 | 5108 | 1 | Valve |
| 2 | 1-633585 | 2 | Bearing-Cone, Taper |
| 3 | 1-633580 | 2 | Seal-Bearing |
| 4 | 1-633581 | 2 | Spacer-Bearing |
| 5 | 138-1933 | 1 | Spacer, Front Caster |

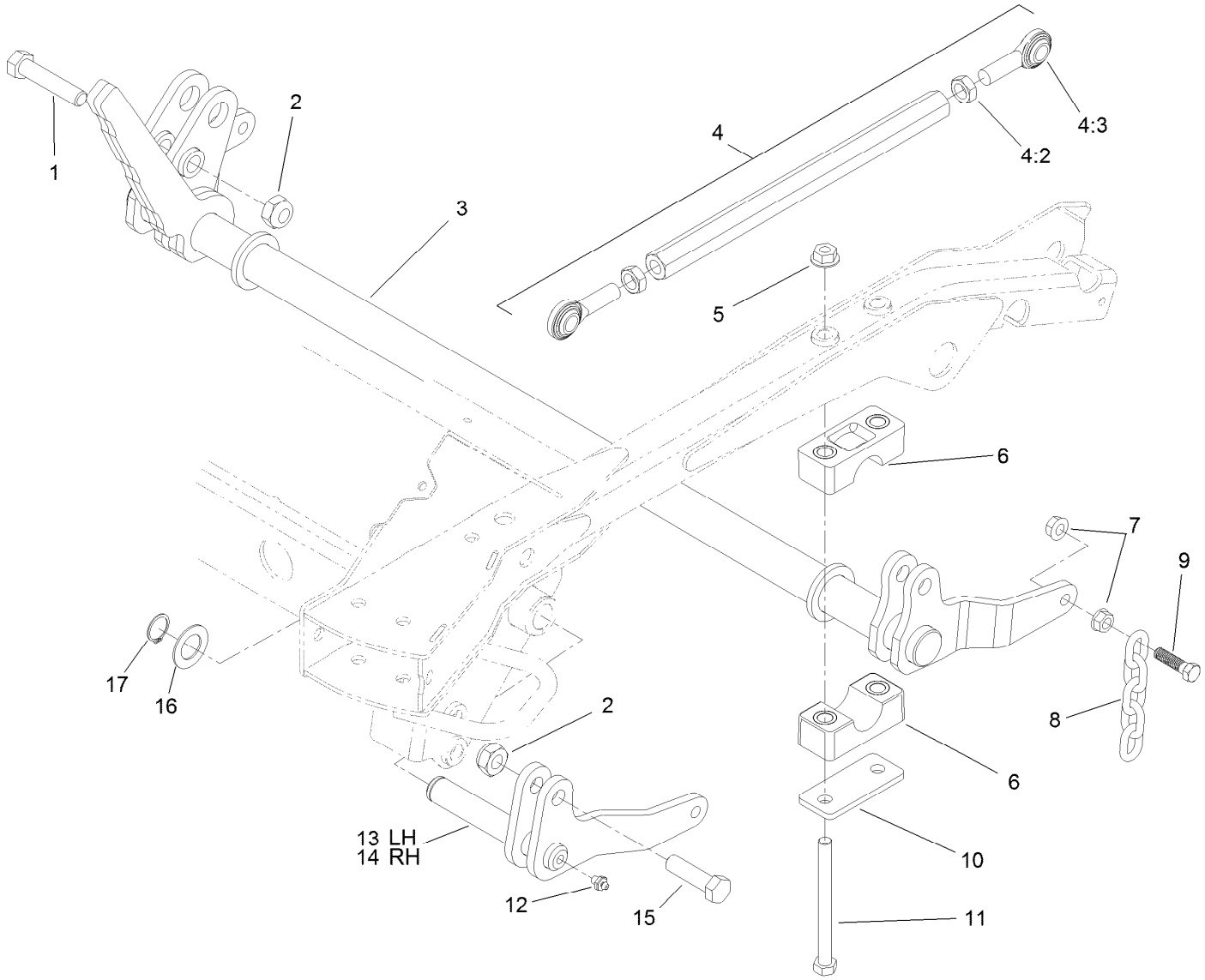


# Deck Lift Assembly

| Ref. | Part Number | Qty. | Description |
|---|---|---|---|
| 1 | 104-5895 | 1 | Screw-HH |
| 2 | 3296-61 | 4 | Nut-Lock |
| 3 | 117-9220-03 | 1 | Shaft-Lift |
| 4 | 114-4059 | 2 | Link ASM |
| 4:2 | 3220-6 | 2 | Nut-Jam |
| 4:3 | 1-633029 | 2 | Balljoint-Spherical |
| 5 | 32128-49 | 4 | Nut-HHF |
| 6 | 115-0491 | 4 | Cap-Bearing |
| 7 | 32128-37 | 8 | Nut-HF |
| 8 | 1-633447 | 4 | Chain-Lift, Deck |

| Ref. | Part Number | Qty. | Description |
|---|---|---|---|
| 9 | 103-1898 | 4 | Screw-HH |
| 10 | 117-2903 | 2 | Plate-Bearing |
| 11 | 325-22 | 4 | Screw-HH |
| 12 | 302-2 | 2 | Fitting-Grease |
| 13 | 110-9818-03 | 1 | Lift-LH |
| 14 | 110-9820-03 | 1 | Lift-RH |
| 15 | 327-22 | 3 | Screw-HH |
| 16 | 69-9010 | 2 | Washer |
| 17 | 32151-29 | 2 | Ring-Retaining |

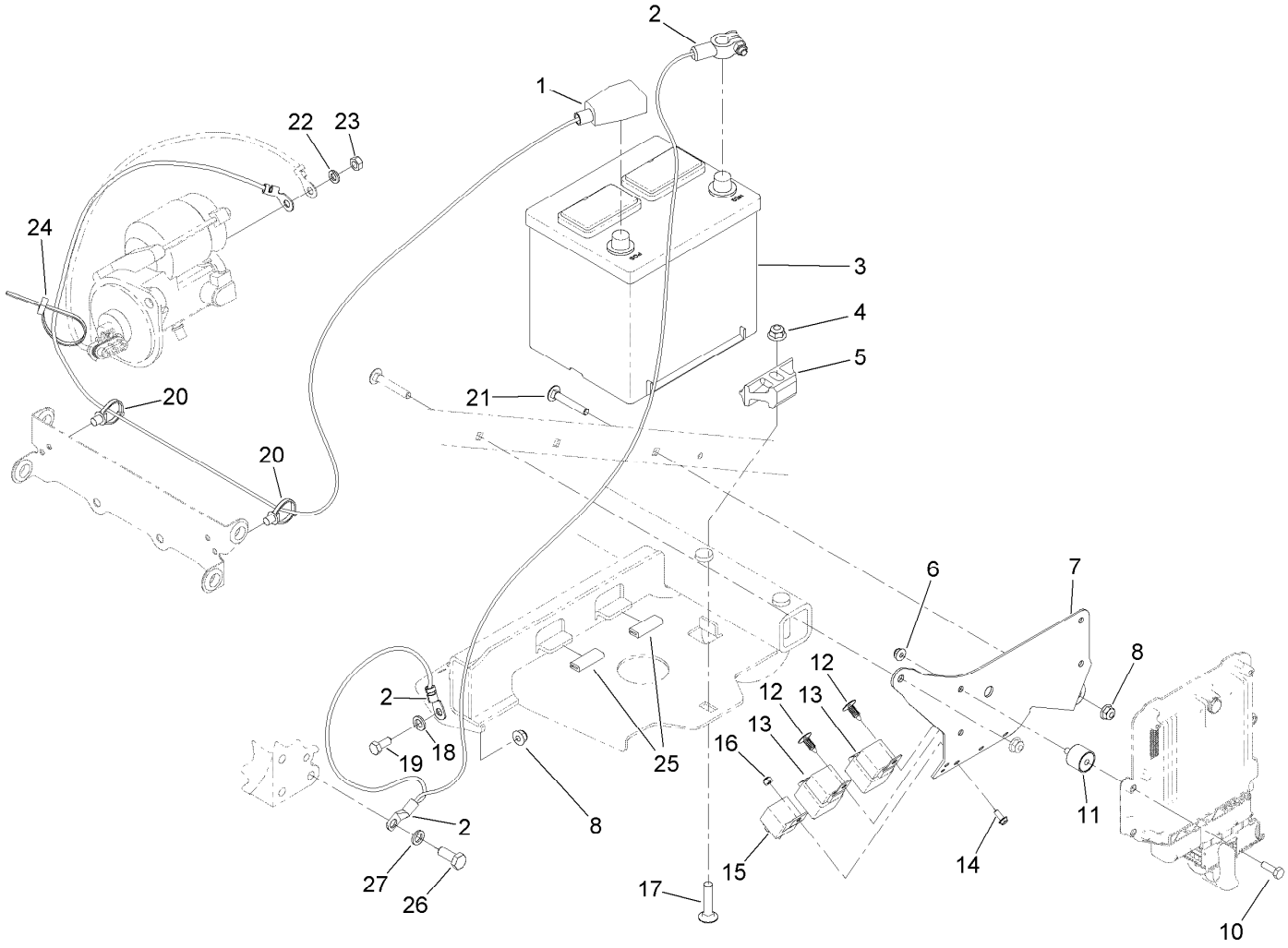


# Battery and Relay Assembly

| Ref. | Part Number | Qty. | Description |
|---|---|---|---|
| 1 | 108-6327 | 1 | Cable-Battery, Positive |
| 2 | 105-0040 | 1 | Cable-Battery, Negative |
| 3 | 106-5187 | 1 | Battery, 525 CCA W/O Electrolyte |
| 4 | 104-8301 | 1 | Nut-HF, NI |
| 5 | 138-6335 | 1 | Retainer-Battery |
| 6 | 104-7201 | 4 | Nut-HF |
| 7 | 120-9148-0P | 1 | Plate-Controller |
| 8 | 104-8300 | 2 | Nut-HF, NI |
| 10 | 321-5 | 4 | Screw-HH |
| 11 | 125-2674 | 4 | Mount-Cylindrical |
| 12 | 117-2382 | 2 | Plug-Plastic |
| 13 | 99-7430 | 2 | Relay-Mini |
| 14 | 3290-321 | 1 | Screw-HWH |
| 15 | 99-7435 | 1 | Relay |
| 16 | 3296-2 | 1 | Nut-Lock, NI |
| 17 | 3231-5 | 1 | Screw-CARR |
| 18 | 120-9683 | 1 | Washer-Plain |
| 19 | 322-3 | 1 | Screw-HH |
| 20 | 32180-030 | 2 | Clip-Tie |
| 21 | 3230-6 | 1 | Bolt-CARR |
| 22 | 3253-4 | 1 | Washer-Lock |
| 23 | 33014-00 | 1 | Nut-Hex |
| 24 | 3290-378 | 1 | Tie-Cable |
| 25 | 131-5508 | 2 | Trim-Battery Hold Down |
| 26 | 33115-025 | 1 | Screw-HH |
| 27 | 33095-00 | 1 | Washer-Flat |

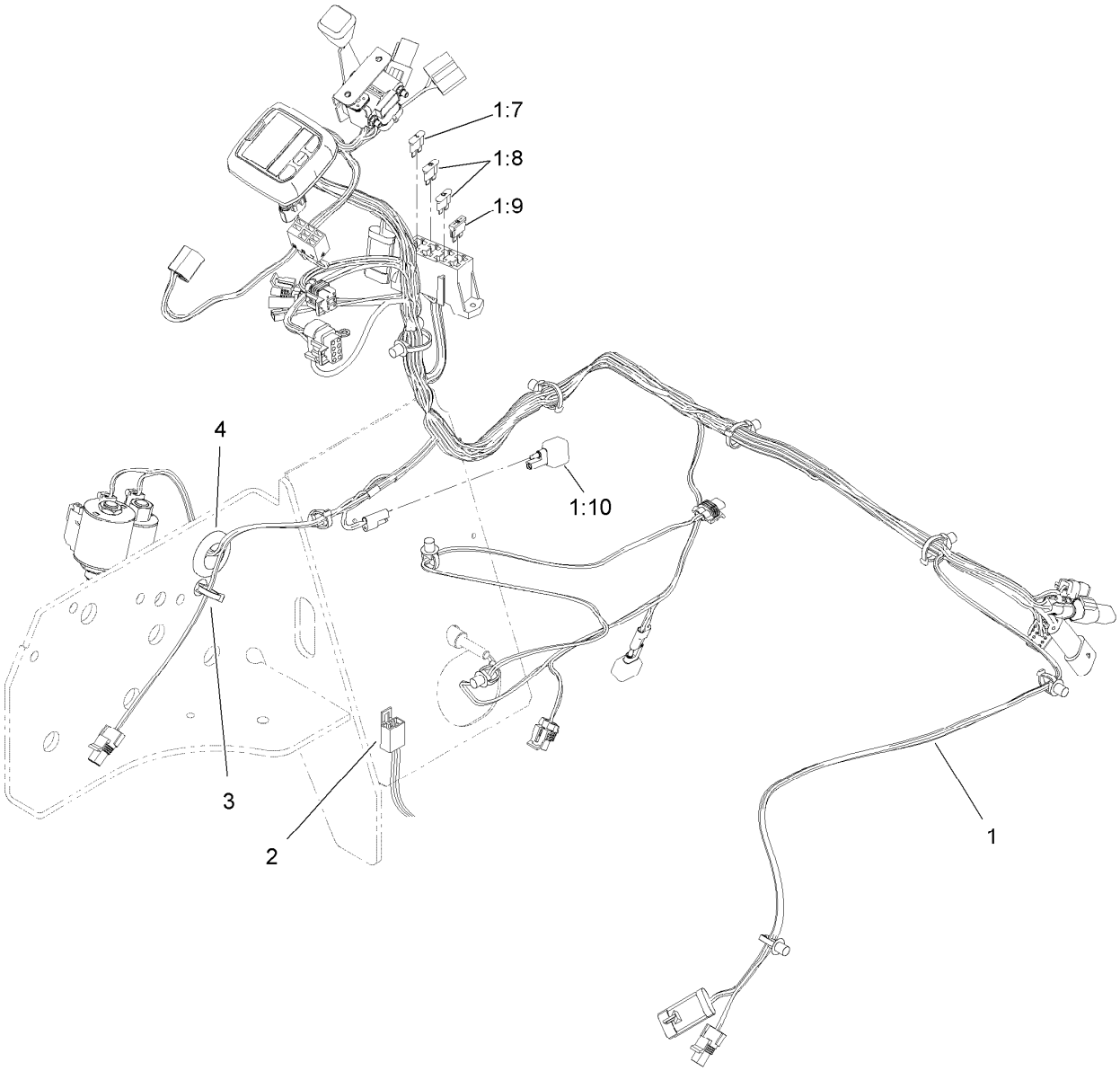


# Main Wire Harness Assembly

| *Ref.* | *Part Number* | *Qty.* | *Description* |
|---|---|---|---|
| 1 | 122-1412 | 1 | Harness-Wire |
| 1:7 | 94-6710 | 1 | Fuse-2 Amp |
| 1:8 | 218-578 | 2 | Fuse-Blade, 10 Amp |
| 1:9 | 109355 | 1 | Fuse-Blade, 15 Amp |
| 1:10 | 100-4918 | 2 | Diode |
| 2 | 108-8657 | 1 | Harness-Wire, Seat |
| 3 | 3290-378 | 3 | Tie-Cable |
| 4 | 237-165 | 1 | Grommet |

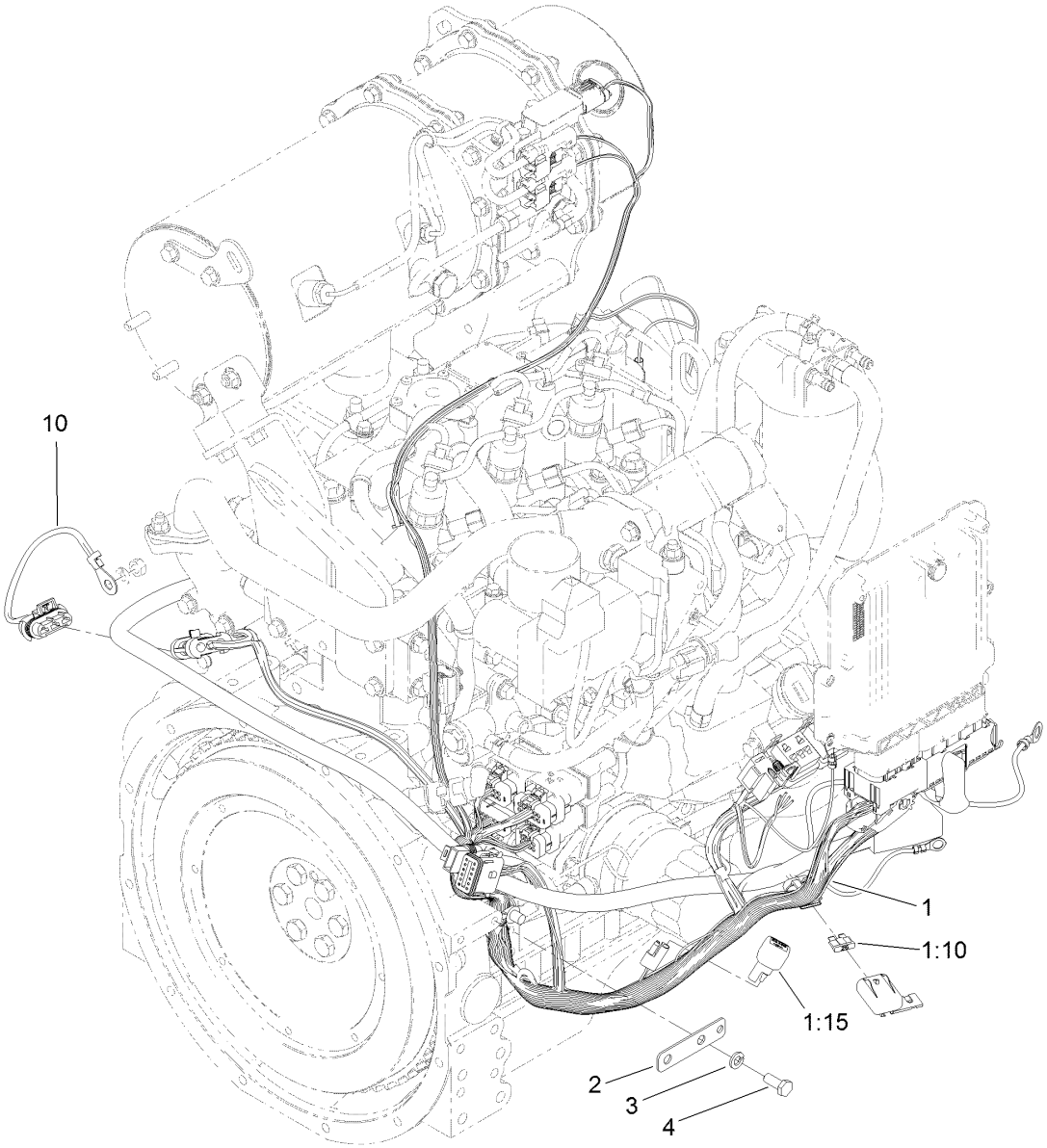


# Engine Harness Assembly

| Ref. | Part Number | Qty. | Description |
|---|---|---|---|
| 1 | 119-4371 | 1 | Harness-Wire, Yanmar |
| 1:10 | 109102 | 1 | Fuse-Blade, 25 Amp |
| 1:15 | 100-4918 | 3 | Diode |
| 2 | 121-5636 | 1 | Tab-Harness |
| 3 | 3253-4 | 2 | Washer-Lock |
| 4 | 33114-020 | 2 | Screw-HH |
| 10 | 99-3441 | 1 | Harness-Wire, Fusible Link |

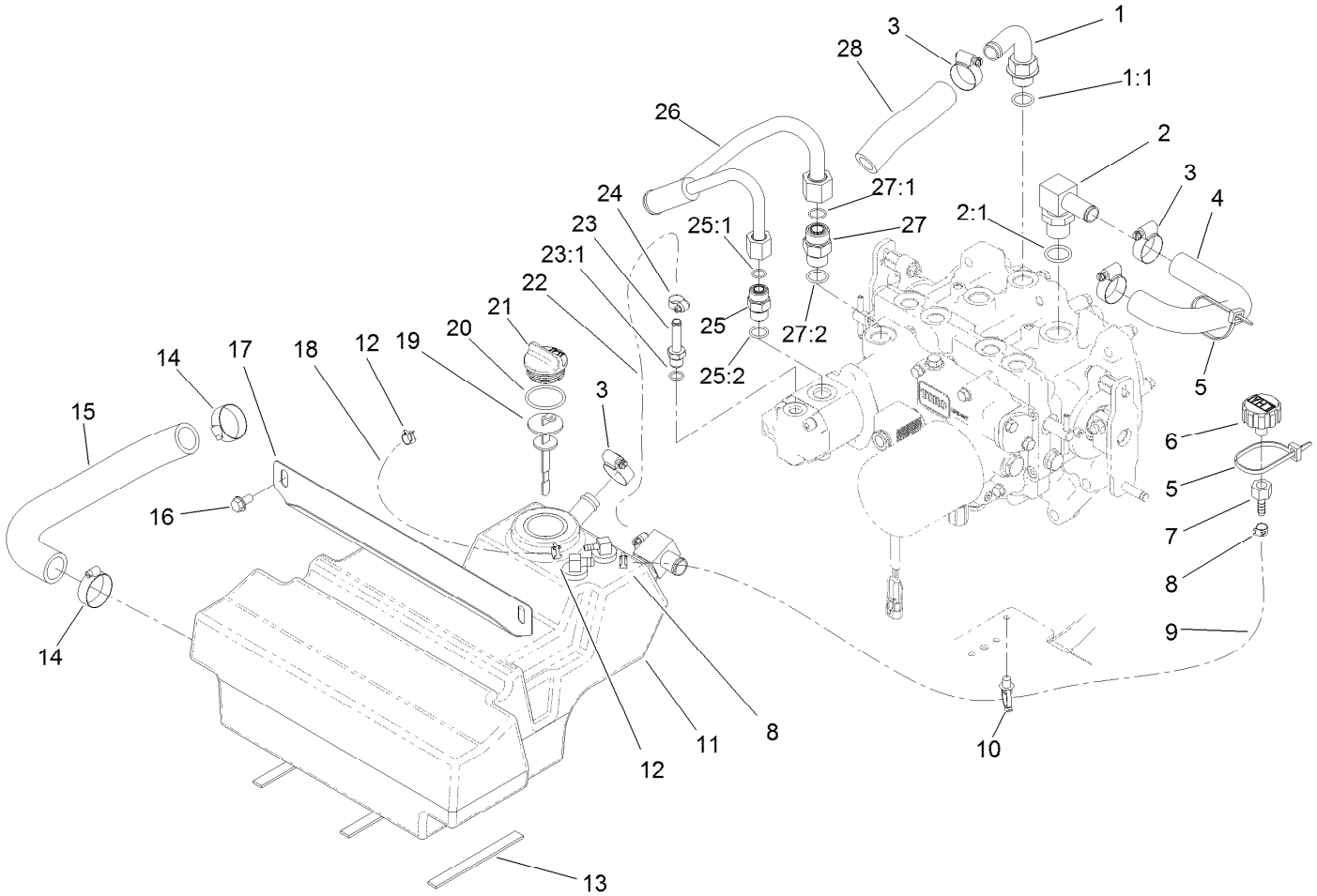


# Hydraulic Reservoir Assembly

| Ref. | Part Number | Qty. | Description |
|---|---|---|---|
| 1 | 110-5522 | 1 | Fitting-Elbow, 90 |
| 1:1 | 237-80 | 1 | O-Ring |
| 2 | 353-987 | 1 | Fitting-Elbow, 90 |
| 2:1 | 237-81 | 1 | O-Ring |
| 3 | 2412-129 | 4 | Clamp-Hose |
| 4 | 110-5524 | 1 | Hose-Return |
| 5 | 3290-379 | 2 | Tie-Cable |
| 6 | 68-6150 | 1 | Breather |
| 7 | 354-95 | 1 | Fitting-Straight |
| 8 | 92-2379 | 2 | Clamp-Hose |
| 9 | 110-9662 | 1 | Hose-Fuel |
| 10 | 32180-030 | 1 | Clip-Tie |
| 11 | 110-8237 | 1 | HYD Reservoir ASM |
| 12 | 2412-98 | 2 | Clamp-Hose |
| 13 | 120-0017 | 3 | Strip-Foam |
| 14 | 2412-34 | 2 | Clamp-Hose |
| 15 | 110-5526 | 1 | Hose-Suction |
| 16 | 32144-14 | 2 | Screw-HWHTF |

| Ref. | Part Number | Qty. | Description |
|---|---|---|---|
| 17 | 110-5529-0P | 1 | Support-Reservoir |
| 18 | 109-0299 | 1 | Hose-Fuel |
| 19 | 112-6365 | 1 | Dipstick |
| 20 | 94-8166 | 1 | O-Ring |
| 21 | 93-7498 | 1 | Plug-Plastic |
| 22 | 94-5625 | 1 | Hose |
| 23 | 353-979 | 1 | Fitting-STR |
| 23:1 | 237-42 | 1 | O-Ring |
| 24 | 2412-108 | 2 | Clamp-Worm |
| 25 | 340-4 | 1 | Fitting-Straight |
| 25:1 | 237-30 | 1 | O-Ring |
| 25:2 | 237-79 | 1 | O-Ring |
| 26 | 110-5532 | 1 | Tube |
| 27 | 340-7 | 1 | Fitting-Straight |
| 27:1 | 237-65 | 1 | O-Ring |
| 27:2 | 237-80 | 1 | O-Ring |
| 28 | 112-1680 | 1 | Hose-HYD |

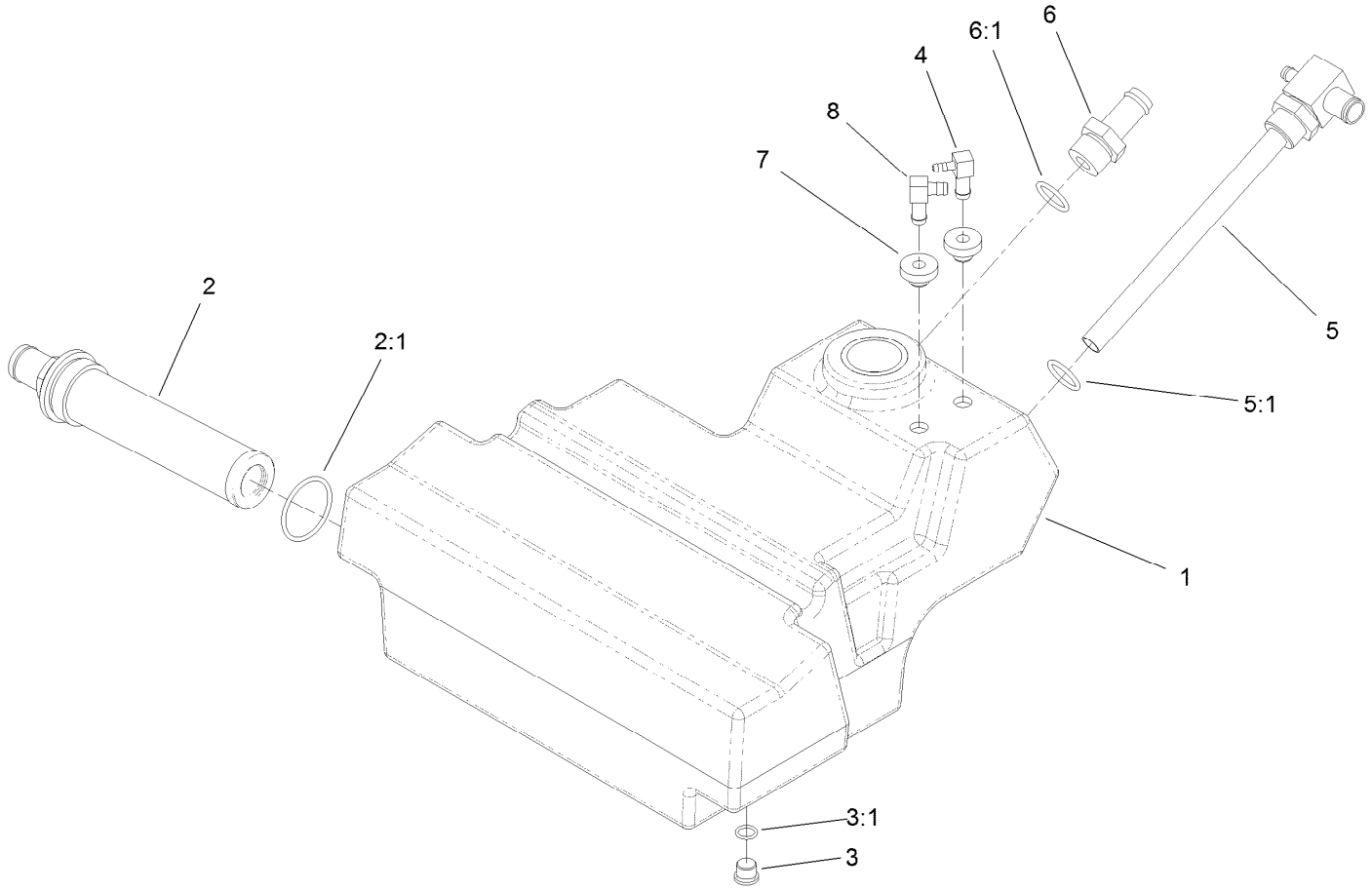


# Hydraulic Reservoir Assembly No. 110-8237

| *Ref.* | *Part Number* | *Qty.* | *Description* |
|---|---|---|---|
| 1 | 138-8249 | 1 | Reservoir-Hydraulic |
| 2 | 104-7546 | 1 | Tank Strainer ASM |
| 2:1 | 340-136 | 1 | O-Ring |
| 3 | 353-989 | 1 | Plug-Hex, Hollow |
| 3:1 | 237-42 | 1 | O-Ring |
| 4 | 104-5228 | 1 | Fitting-Elbow, 90 DEG |
| 5 | 108-9894 | 1 | Fitting-Elbow, Special |
| 5:1 | 237-81 | 1 | O-Ring |
| 6 | 354-73 | 1 | Fitting |
| 6:1 | 237-81 | 1 | O-Ring |
| 7 | 46-6560 | 2 | Bushing |
| 8 | 46-6550 | 1 | Fitting-Elbow, 90 DEG |

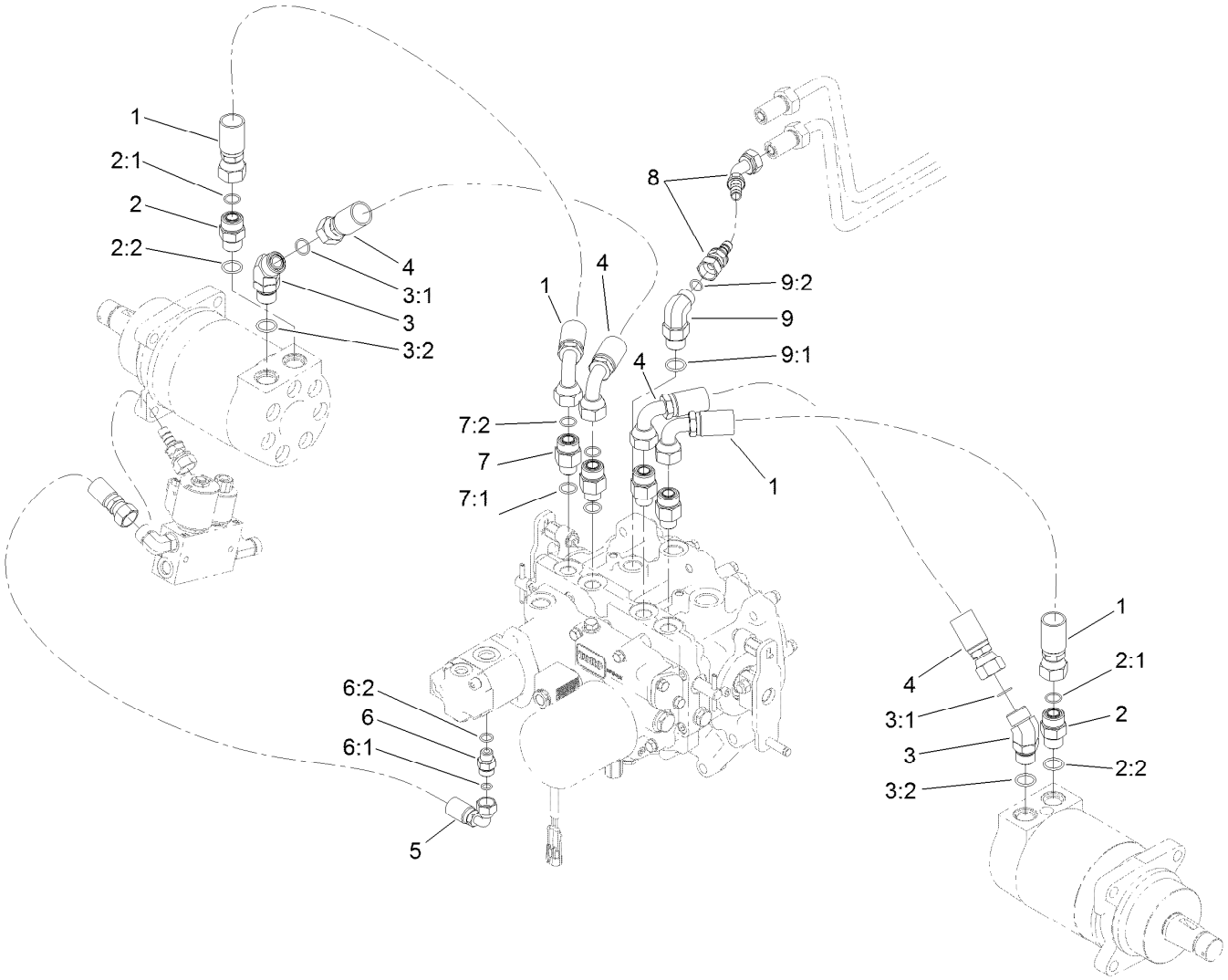


# Hydraulic Hose Routing Assembly

| Ref. | Part Number | Qty. | Description |
|---|---|---|---|
| 1 | 112-1683 | 2 | Hose |
| 2 | 340-7 | 2 | Fitting-Straight |
| 2:1 | 237-65 | 1 | O-Ring |
| 2:2 | 237-80 | 1 | O-Ring |
| 3 | 340-14 | 2 | Fitting-HYD, 45 DEG |
| 3:1 | 237-65 | 1 | O-Ring |
| 3:2 | 237-80 | 1 | O-Ring |
| 4 | 110-5518 | 2 | Hose |
| 5 | 127-4910 | 1 | Hose-HYD |
| 6 | 340-2 | 1 | Fitting-Straight |

| Ref. | Part Number | Qty. | Description |
|---|---|---|---|
| 6:1 | 237-22 | 1 | O-Ring |
| 6:2 | 237-42 | 1 | O-Ring |
| 7 | 340-155 | 4 | Fitting-Straight |
| 7:1 | 237-79 | 1 | O-Ring |
| 7:2 | 237-151 | 1 | O-Ring |
| 8 | 121-3372 | 1 | Hose-HYD |
| 9 | 340-105 | 1 | Fitting-Elbow, 90 DEG |
| 9:1 | 237-80 | 1 | O-Ring |
| 9:2 | 237-30 | 1 | O-Ring |

# Air Cleaner Assembly

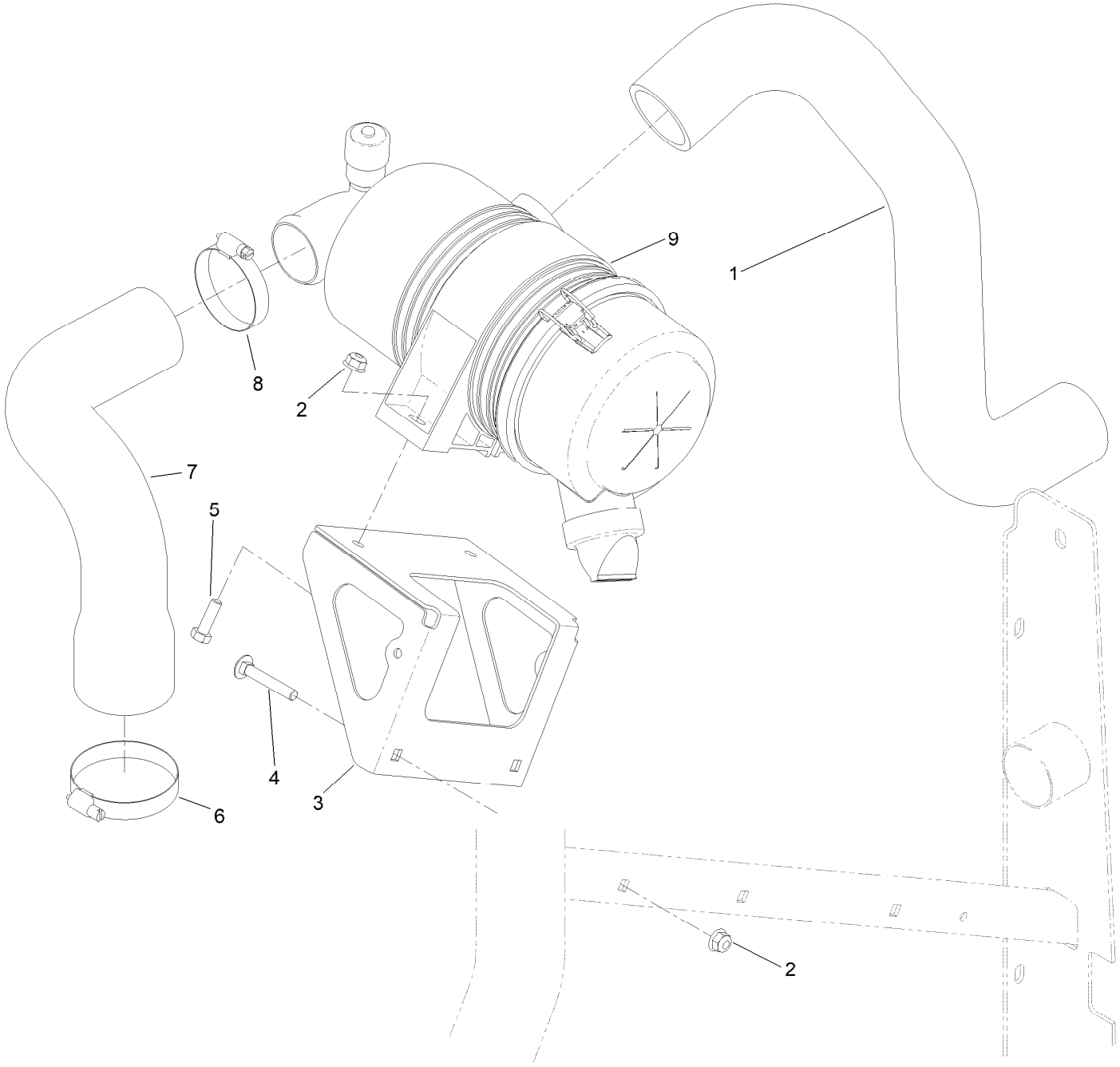

# Air Cleaner Assembly (continued)

| Ref. | Part Number | Qty. | Description |
|---|---|---|---|
| 1 | 120-9177 | 1 | Hose-Air |
| 2 | 104-8300 | 4 | Nut-HF, NI |
| 3 | 120-9198-0P | 1 | Bracket-Air Cleaner |
| 4 | 3230-6 | 2 | Bolt-CARR |
| 5 | 322-5 | 2 | Screw-HH |
| 6 | 2412-125 | 1 | Clamp-Hose |
| 7 | 120-9199 | 1 | Hose-Air |
| 8 | 2412-130 | 1 | Clamp-Hose |
| 9 | 136-4481 | 1 | Air Cleaner ASM |

# Air Cleaner Assembly No. 136-4481

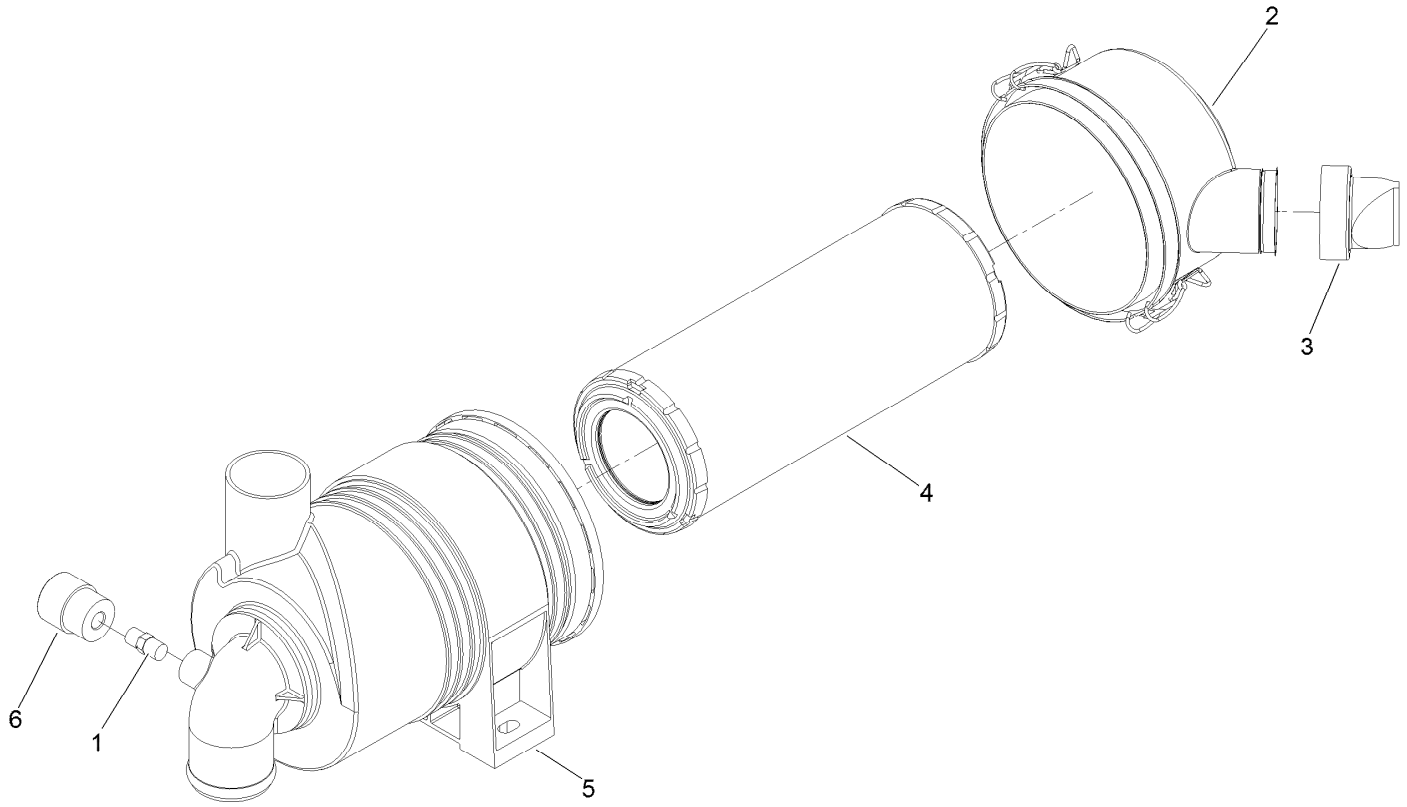

# Air Cleaner Assembly No. 136-4481 (continued)

| Ref. | Part Number | Qty. | Description |
|---|---|---|---|
| 1 | 94-1416 | 1 | Adapter-Indicator |
| 2 | 98-9771 | 1 | Cover ASM |
| 3 | 94-1414 | 1 | Valve-Vacuator |
| 4 | 108-3810 | 1 | Filter-Air |
| 5 | 98-4525 | 1 | Bracket-Cleaner, Air |
| 6 | 93-9164 | 1 | Indicator-Mini |

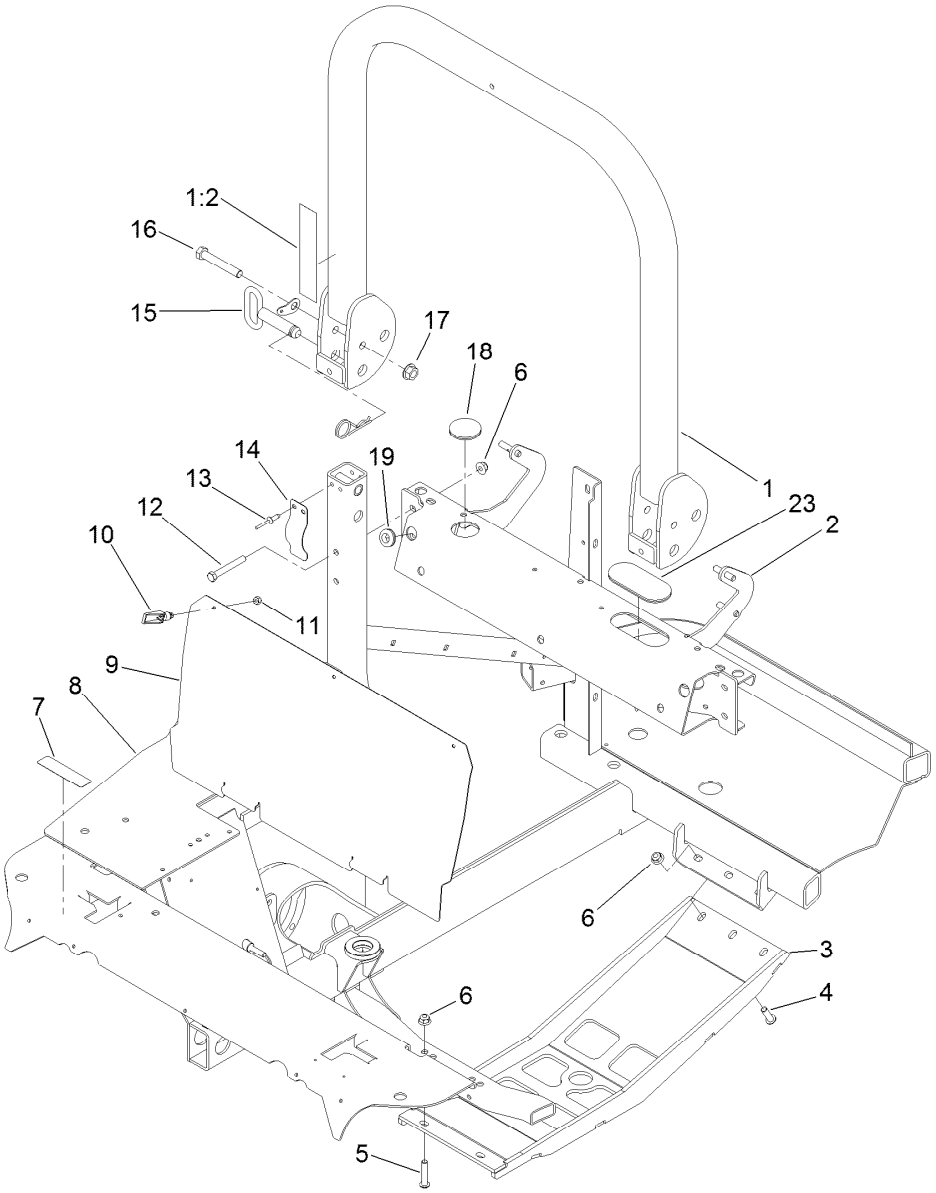


# Frame and Upper-ROPS Assembly

| Ref. | Part Number | Qty. | Description |
|---|---|---|---|
| 1 | 110-9770 | 1 | Upper ROPS ASM |
| 1:2 | 107-3069 | 1 | Decal-Warning |
| 2 | 132-8155 | 1 | Crossmember ASM |
| 3 | 125-2660-03 | 1 | Skid |
| 4 | 3274-63 | 3 | Screw-HSBH |
| 5 | 3274-107 | 2 | Screw-HSBH |
| 6 | 104-8301 | 9 | Nut-HF, NI |
| 7 | 133-8062 | 1 | Decal-Arrestor, Spark |
| 8 | 120-0060-03 | 1 | Frame-Rear |
| 9 | 121-3381-03 | 1 | Panel-Rear |
| 10 | 74-5950 | 3 | Latch-Swell |

| Ref. | Part Number | Qty. | Description |
|---|---|---|---|
| 11 | 1-804254 | 3 | Nut-Lock, HH |
| 12 | 323-13 | 4 | Screw-HH |
| 13 | 3290-412 | 4 | Rivet-Blind |
| 14 | 110-5696 | 2 | Spring-Leaf |
| 15 | 103-4553 | 2 | Pin-Fold, ROPS |
| 16 | 112-7264 | 2 | Screw-HH |
| 17 | 32128-23 | 2 | Nut-HF |
| 18 | 105-5761 | 1 | Grommet |
| 19 | 237-124 | 2 | Grommet |
| 23 | 130-6086 | 1 | Grommet |

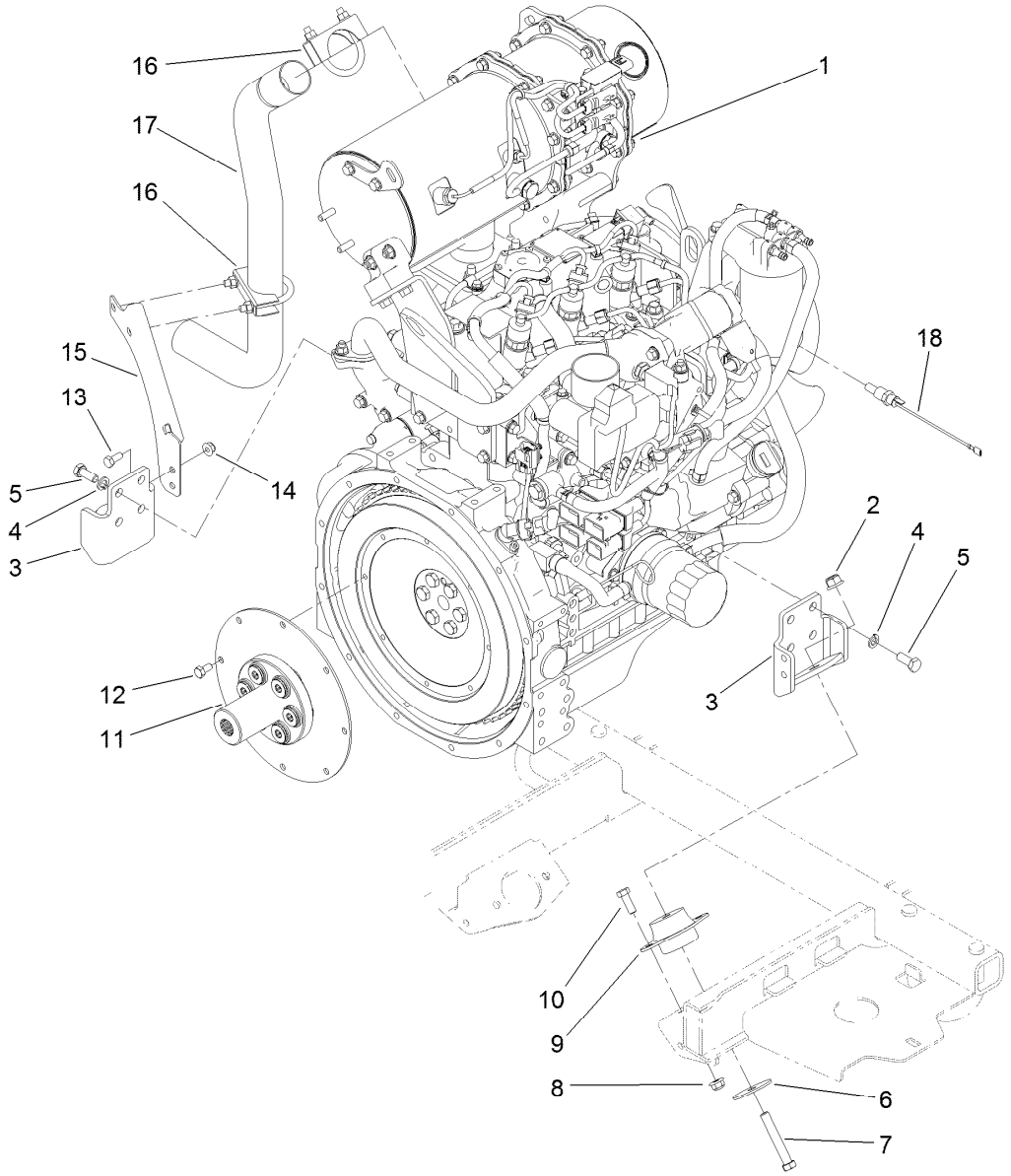


# Engine Assembly

| Ref. | Part Number | Qty. | Description |
|---|---|---|---|
| 1 | 138-6919 | 1 | Engine-Yanmar |
| 2 | 114-8417 | 2 | Nut-HF, NI |
| 3 | 120-9180-03 | 2 | Mount-Motor, Upper |
| 4 | 48-9590 | 8 | Washer-Lock |
| 5 | 33115-025 | 8 | Screw-HH |
| 6 | 87-5100 | 2 | Washer-Snubbing |
| 7 | 324-11 | 2 | Screw-HH |
| 8 | 104-8301 | 4 | Nut-HF, NI |
| 9 | 130-2486 | 2 | Mount |

| Ref. | Part Number | Qty. | Description |
|---|---|---|---|
| 10 | 323-6 | 4 | Screw-HH |
| 11 | 120-9131 | 1 | Coupling-Flywheel |
| 12 | 99-5132 | 8 | Bolt |
| 13 | 104-8300 | 2 | Nut-HF, NI |
| 14 | 322-3 | 2 | Screw-HH |
| 15 | 127-6450-0P | 1 | Support-Exhaust |
| 16 | 18-2130 | 2 | Clamp |
| 17 | 120-9137 | 1 | Tube-Exhaust |
| 18 | 112-6347 | 1 | Switch-Temp, Dual |

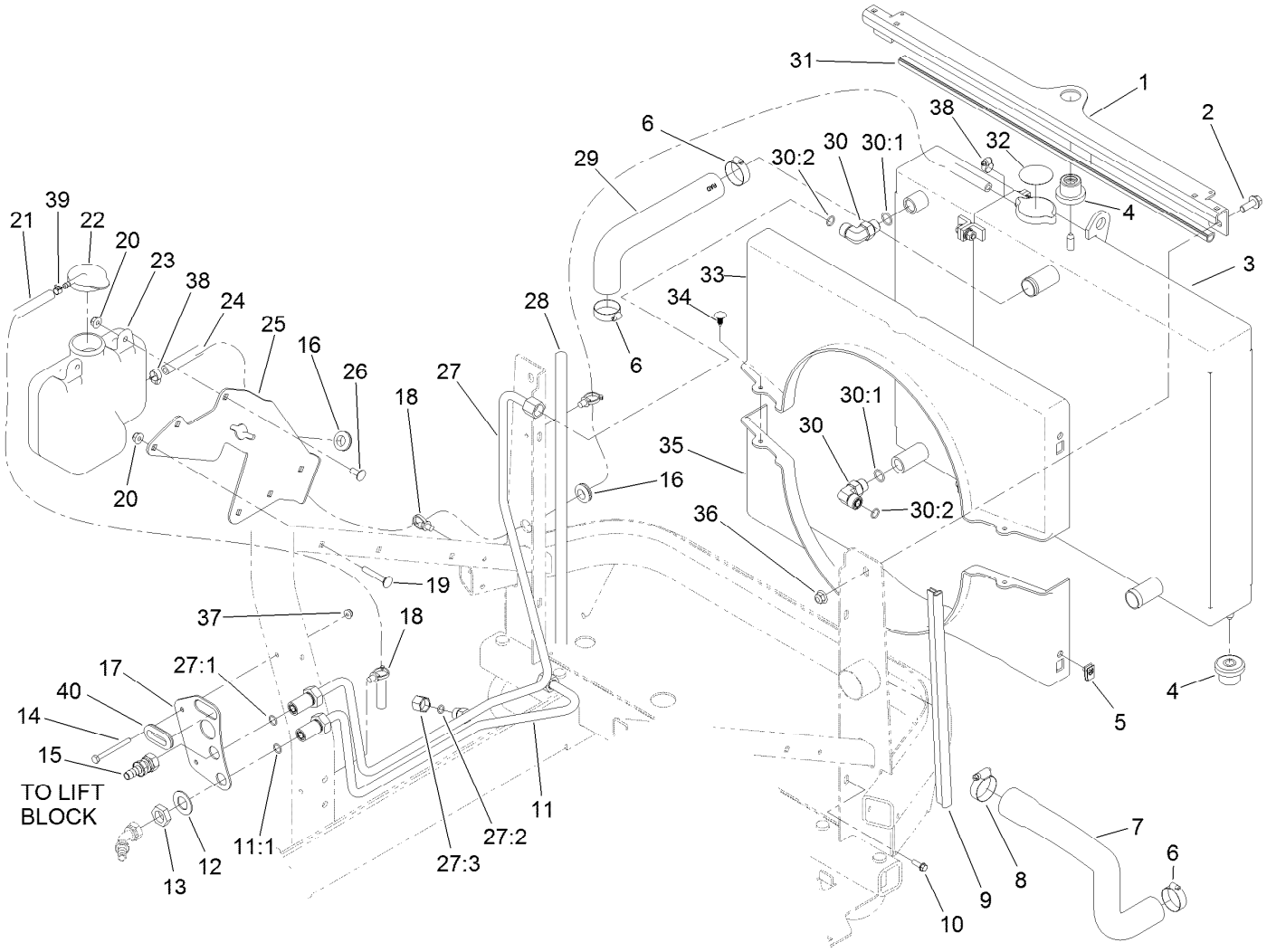


# Radiator Assembly

| Ref. | Part Number | Qty. | Description |
|---|---|---|---|
| 1 | 120-0068-03 | 1 | Bracket-Cooling, Top |
| 2 | 3234-42 | 2 | Screw-HHF |
| 3 | 121-3330 | 1 | Cooling ASM |
| 4 | 119-1422 | 3 | Mount-Isolator |
| 5 | 107069 | 4 | Clip |
| 6 | 2412-34 | 3 | Clamp-Hose |
| 7 | 121-3322 | 1 | Hose-Radiator, Lower |
| 8 | 2412-3 | 1 | Clamp-Hose |
| 9 | 120-9146 | 2 | Seal-Bulb |
| 10 | 32105-15 | 4 | Screw-HWH |
| 11 | 121-3324 | 1 | HYD Tube ASM |
| 11:1 | 237-30 | 1 | O-Ring |
| 12 | 69-8930 | 2 | Washer |
| 13 | 340-127 | 2 | Nut-Bulkhead |
| 14 | 321-14 | 2 | Screw-HH |
| 15 | 121-3373 | 1 | Hose-HYD |
| 16 | 237-124 | 2 | Grommet |
| 17 | 131-5527 | 1 | Bracket-Bulkhead |
| 18 | 32180-030 | 3 | Clip-Tie |
| 19 | 3230-6 | 2 | Bolt-CARR |
| 20 | 104-8300 | 4 | Nut-HF, NI |

| Ref. | Part Number | Qty. | Description |
|---|---|---|---|
| 21 | 110-8255 | 1 | Hose-Fuel |
| 22 | 1-643164 | 1 | Cap-Tank, Overflow |
| 23 | 125-2651 | 1 | Bottle-Overflow |
| 24 | 110-3258 | 1 | Hose-Fuel |
| 25 | 125-2656-0P | 1 | Bracket-Bottle |
| 26 | 3230-23 | 2 | Bolt-CARR |
| 27 | 121-3323 | 1 | HYD Tube ASM |
| 27:1 | 237-30 | 1 | O-Ring |
| 27:2 | 237-22 | 1 | O-Ring |
| 27:3 | 340-117 | 1 | Cap |
| 28 | 119-1426 | 2 | Seal-Bulb |
| 29 | 121-3321 | 1 | Hose-Radiator, Upper |
| 30 | 340-98 | 2 | Fitting-Elbow, 90 DEG |
| 30:1 | 237-79 | 1 | O-Ring |
| 30:2 | 237-30 | 1 | O-Ring |
| 31 | 119-1427 | 2 | Seal-Bulb |
| 32 | 117-3276 | 1 | Decal-Danger |
| 33 | 121-3312 | 1 | Shroud-Top |
| 34 | 117-2382 | 2 | Plug-Plastic |
| 35 | 121-3311 | 1 | Shroud-Bottom |
| 36 | 104-8301 | 2 | Nut-HF, NI |

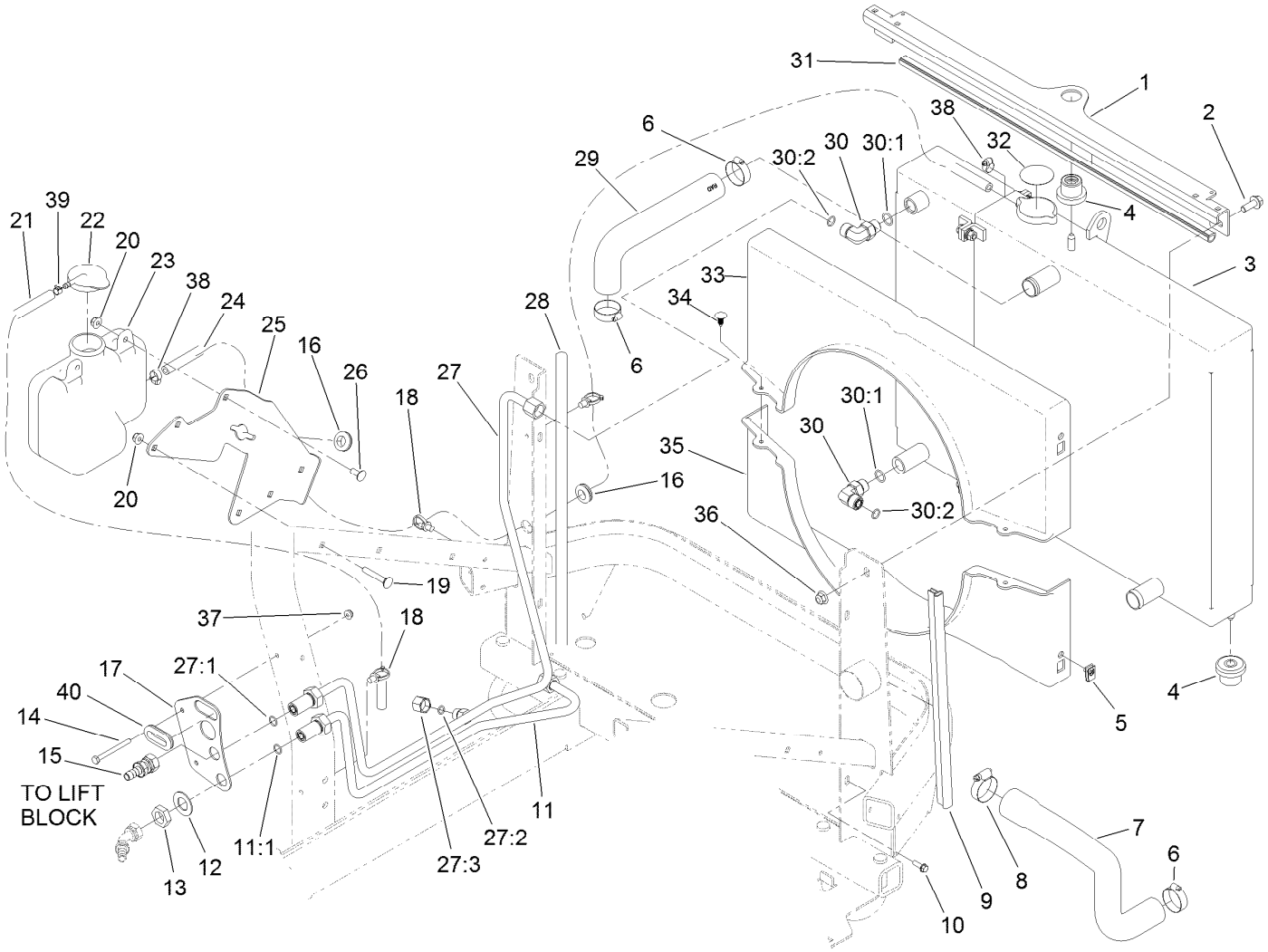


# Radiator Assembly (continued)

| Ref. | Part Number | Qty. | Description |
|---|---|---|---|
| 37 | 104-7201 | 2 | Nut-HF |
| 38 | 2412-108 | 1 | Clamp-Worm |
| 39 | 2412-80 | 1 | Clamp-Hose |
| 40 | 240-3 | 1 | Grommet-Rubber |

# Cooling Assembly No. 121-3330

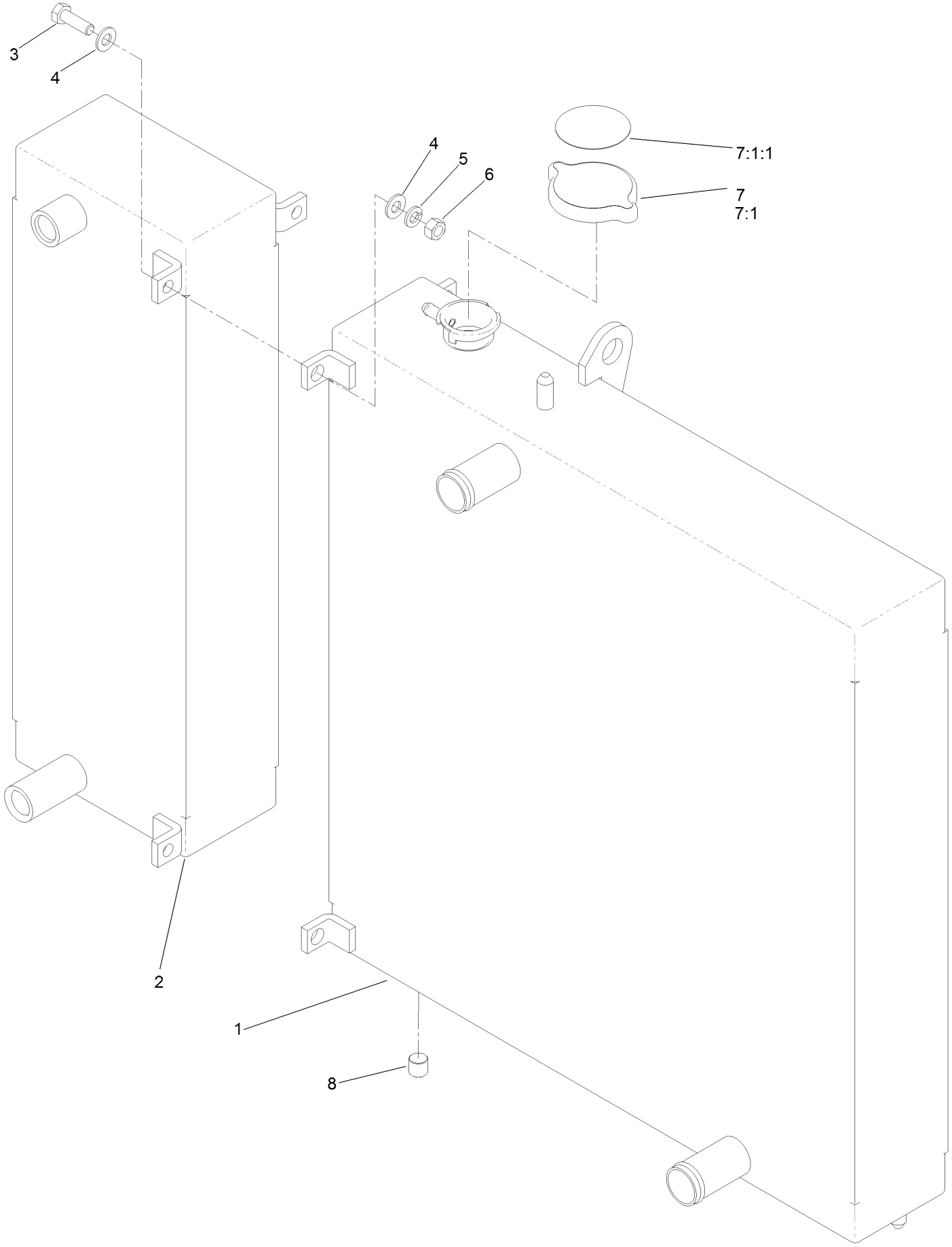

# Cooling Assembly No. 121-3330 (continued)

| Ref. | Part Number | Qty. | Description |
|---|---|---|---|
| 1 | 121-3328 | 1 | Radiator |
| 2 | 121-3329 | 1 | Oil Cooler |
| 3 | 322-5 | 3 | Screw-HH |
| 4 | 3256-23 | 6 | Washer-Plain |
| 5 | 3253-4 | 3 | Washer-Lock |
| 6 | 3217-6 | 3 | Nut-Hex |
| 7 | 119-1430 | 1 | Radiator Cap ASM |
| 7:1 | | 1 | Cap-Radiator ● |
| 7:1:1 | 117-3276 | 1 | Decal-Danger |
| 8 | 99-8551 | 1 | Plug-Pipe |

● Not serviced separately

# Hood Assembly

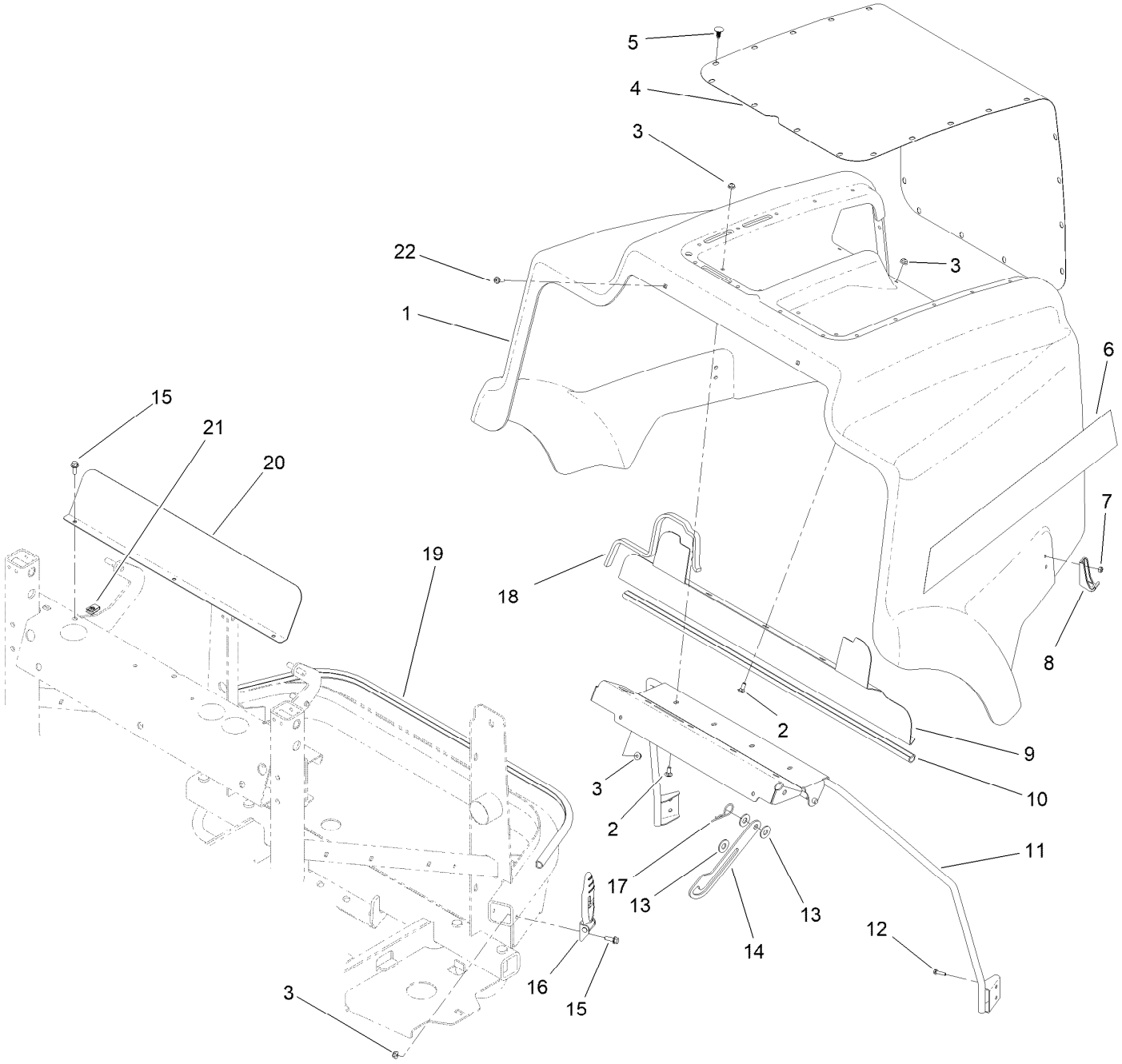

# Hood Assembly (continued)

| Ref. | Part Number | Qty. | Description |
|---|---|---|---|
| 1 | 125-2709 | 1 | Hood |
| 2 | 3229-11 | 7 | Screw-CARR |
| 3 | 104-7201 | 11 | Nut-HF |
| 4 | 120-9134-03 | 1 | Screen-Intake |
| 5 | 117-2382 | 26 | Plug-Plastic |
| 6 | 110-5545 | 2 | Decal-Hood |
| 7 | 3296-2 | 4 | Nut-Lock, NI |
| 8 | 103-2897 | 2 | Latch-Catch |
| 9 | 120-9121-03 | 1 | Plate-Seal |
| 10 | 120-9147 | 1 | Seal-Bulb |
| 11 | 120-9126-0P | 1 | Support-Hood |
| 12 | 3274-39 | 4 | Screw-HSBH |
| 13 | 3256-4 | 3 | Washer-Flat |
| 14 | 120-9129 | 1 | Prop-Hood |
| 15 | 3234-4 | 5 | Screw-HHF |
| 16 | 103-2898 | 2 | Latch-Rubber |
| 17 | 3290-255 | 3 | Pin-Cotter, Hair |
| 18 | 121-3335 | 2 | Seal-Foam |
| 19 | 120-9161 | 1 | Seal-Bulb |
| 20 | 120-9139-03 | 1 | Shield-Air |
| 21 | 107069 | 3 | Clip |
| 22 | 92-3911 | 2 | Screw-HSBH |

# Cylinder Block Assembly

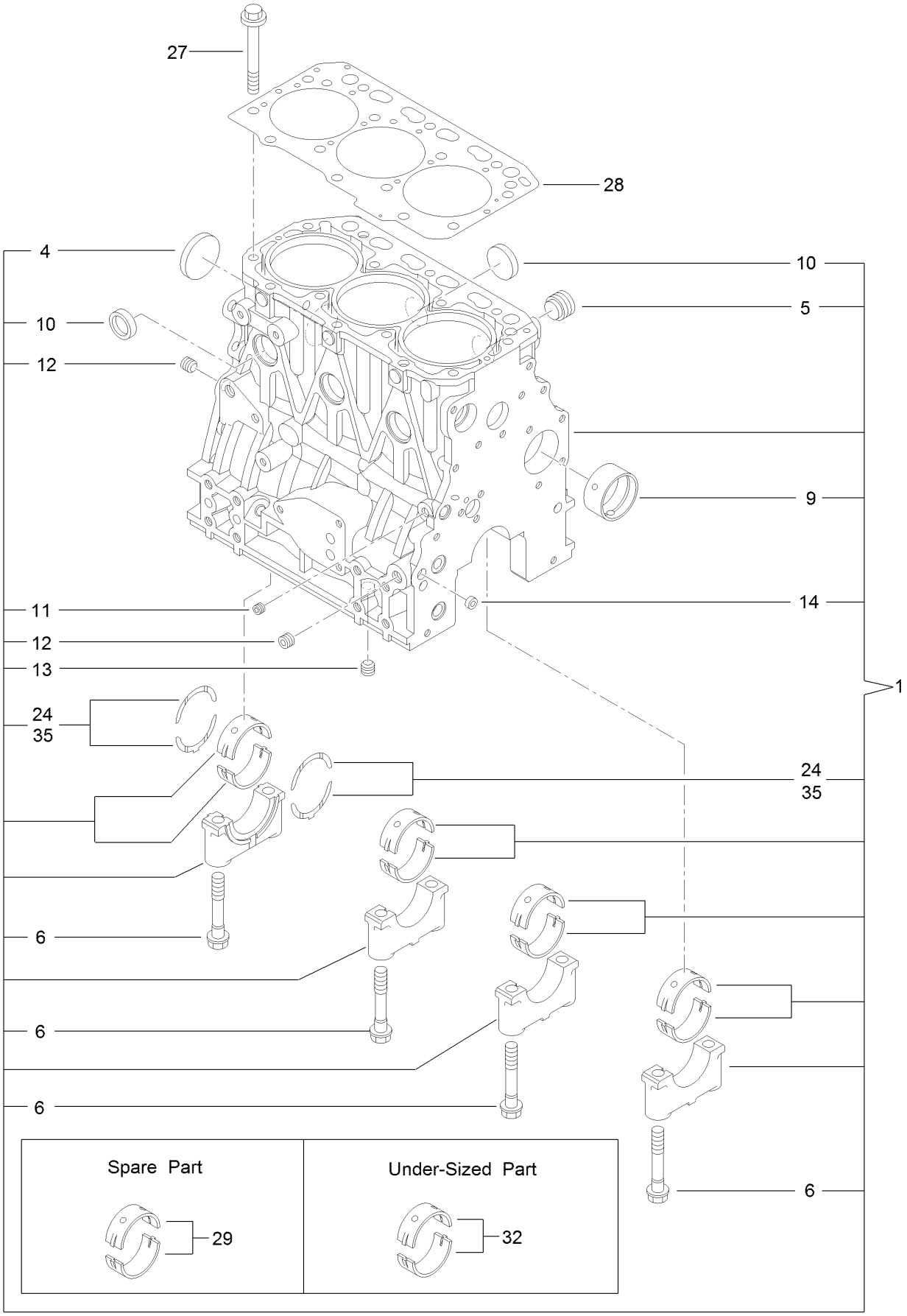

# Cylinder Block Assembly (continued)

| Ref. | Part Number | Qty. | Description |
|---|---|---|---|
| 1 | 127-4717 | 1 | Cylinder Block ASM |
| 4 | 125-6980 | 1 | Plug |
| 5 | 125-7170 | 1 | Plug |
| 6 | 125-7007 | 8 | Bolt |
| 9 | 125-7108 | 1 | Bushing |
| 10 | 125-7239 | 6 | Plug |
| 11 | 125-6969 | 1 | Plug |
| 12 | 125-6973 | 2 | Plug |
| 13 | 125-6973 | 1 | Plug |
| 14 | 125-7237 | 1 | Plug |
| 24 | 125-7010 | 2 | Metal-Thrust |
| 27 | 125-7006 | 14 | Bolt |
| 28 | 127-4716 | 1 | Head Gasket ASM |
| 29 | 125-6981 | 4 | Metal-Main |
| 32 | 125-7009 | 4 | Metal-Main (0.25) |
| 35 | 125-7011 | 1 | Metal-Thrust (0.25) |

# Gear Housing Assembly

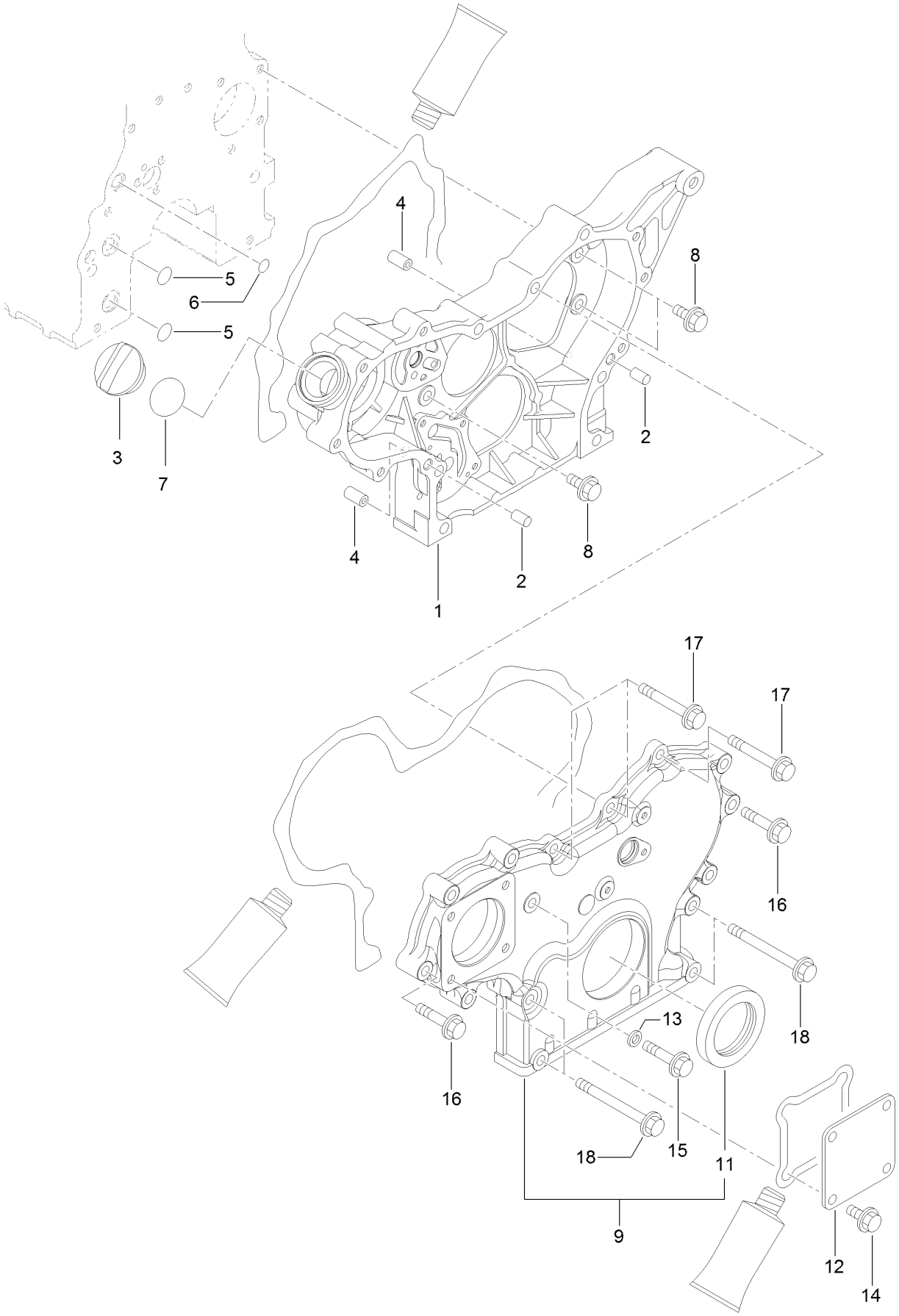

# Gear Housing Assembly (continued)

| Ref. | Part Number | Qty. | Description |
|---|---|---|---|
| 1 | 127-3023 | 1 | Case-Gear |
| 2 | 125-6995 | 2 | Pin |
| 3 | 125-6972 | 1 | Cover-Filler |
| 4 | 125-7107 | 2 | Pipe |
| 5 | 125-6909 | 2 | O-Ring |
| 6 | 127-2973 | 1 | O-Ring |
| 7 | 125-7197 | 1 | O-Ring |
| 8 | 100-6928 | 3 | Bolt |
| 9 | 127-3024 | 1 | Gearcase Cover ASM |
| 11 | 125-6944 | 1 | Seal-Oil |
| 12 | 125-6977 | 1 | Cover |
| 13 | 125-7174 | 1 | Washer-Seal |
| 14 | 100-6928 | 4 | Bolt |
| 15 | 125-7217 | 1 | Bolt |
| 16 | 125-7218 | 7 | Bolt |
| 17 | 125-7222 | 3 | Bolt |
| 18 | 125-7224 | 4 | Bolt |

# Cylinder Head and Cover Assembly

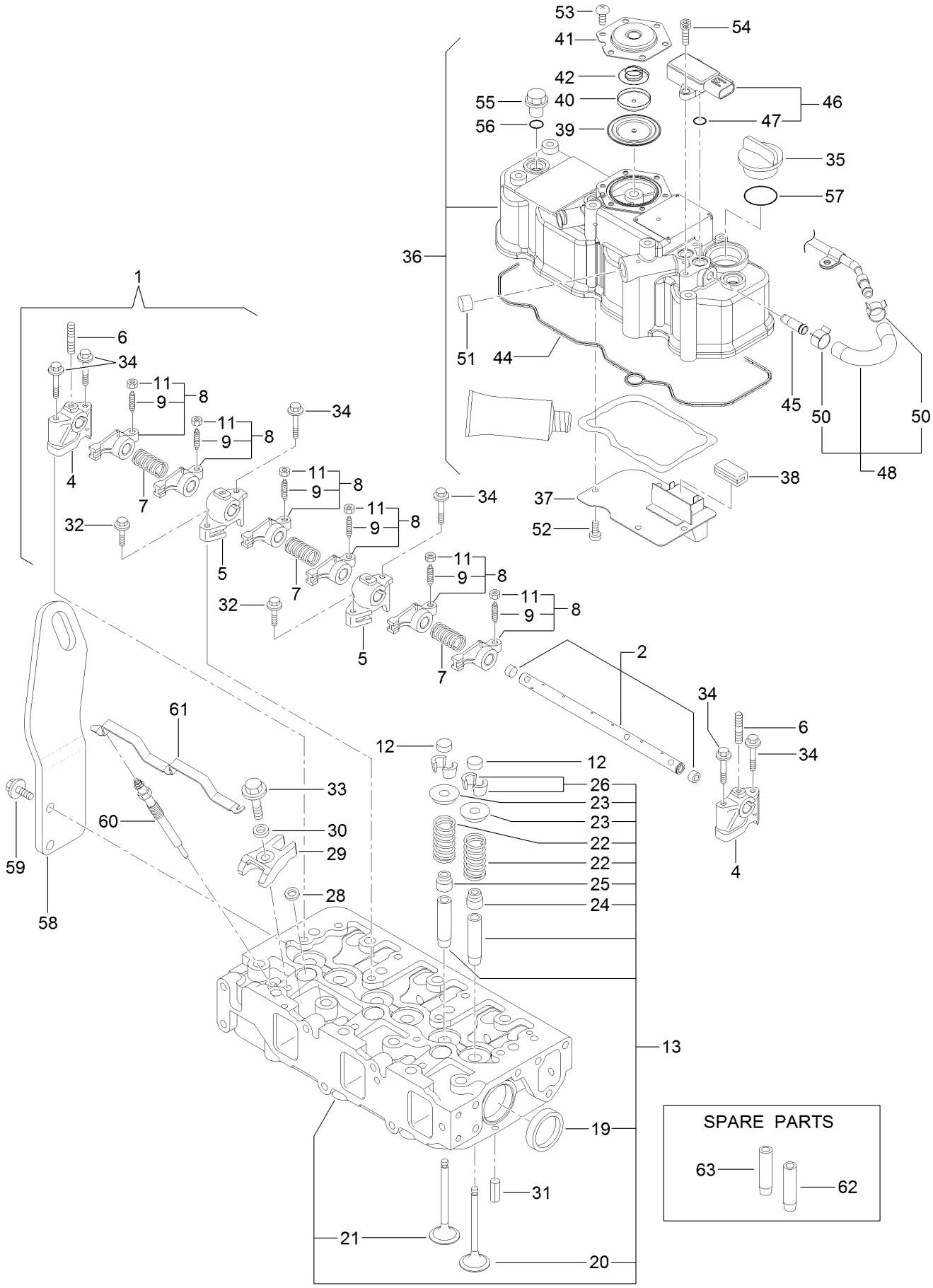

# Cylinder Head and Cover Assembly (continued)

| Ref. | Part Number | Qty. | Description |
|---|---|---|---|
| 1 | 127-3757 | 1 | Shaft ASM |
| 2 | 127-3758 | 1 | Shaft |
| 4 | 127-2974 | 2 | Support |
| 5 | 127-2975 | 2 | Support |
| 6 | 127-3759 | 3 | Stud |
| 7 | 127-2995 | 3 | Spring |
| 8 | 127-2989 | 6 | Arm-Rocker |
| 9 | 125-7013 | 6 | Screw-Adjust, Valve |
| 11 | 125-7014 | 6 | Nut |
| 12 | 127-2996 | 6 | Cap-Valve |
| 13 | 127-4720 | 1 | Cylinder Head ASM |
| 19 | 125-7240 | 2 | Plug |
| 20 | 127-2990 | 3 | Valve |
| 21 | 127-4710 | 3 | Valve |
| 22 | 127-3012 | 6 | Spring |
| 23 | 127-3013 | 6 | Retainer-Spring |
| 24 | 127-2986 | 3 | Seal-Stem, Valve |
| 25 | 127-3027 | 3 | Seal-Stem, Valve |
| 26 | 127-3186 | 6 | Pin-Cotter |
| 28 | 127-3021 | 3 | Gasket-Injector |
| 29 | 127-3028 | 3 | Retainer-Injector |
| 30 | 127-2980 | 3 | Washer-Injector |
| 31 | 125-7184 | 2 | Pin-Spring |
| 32 | 125-7215 | 2 | Bolt |
| 33 | 125-7217 | 3 | Bolt |
| 34 | 125-7220 | 6 | Bolt |
| 35 | 125-6972 | 1 | Cover-Filler |

| Ref. | Part Number | Qty. | Description |
|---|---|---|---|
| 36 | 127-4719 | 1 | Cylinder Head Cover ASM |
| 37 | 127-2988 | 1 | Plate |
| 38 | 125-7012 | 1 | Baffle |
| 39 | 125-6959 | 1 | Diaphragm |
| 40 | 125-6960 | 1 | Plate |
| 41 | 125-6961 | 1 | Plate-Breather |
| 42 | 125-6962 | 1 | Spring-Diaphragm |
| 44 | 127-3856 | 1 | Gasket-Valve Cover |
| 45 | 127-3026 | 1 | Joint |
| 46 | 127-3029 | 1 | Sensor-Pressure |
| 47 | 127-3032 | 2 | O Ring-Sensor, Pressure |
| 48 | 127-3040 | 1 | Hose ASM |
| 50 | 127-3041 | 2 | Clip-Hose |
| 51 | 125-6913 | 1 | Plug |
| 52 | 125-7186 | 4 | Screw |
| 53 | 125-7186 | 6 | Screw |
| 54 | 127-3184 | 2 | Bolt |
| 55 | 125-6974 | 3 | Knob |
| 56 | 93-0418 | 3 | O-Ring |
| 57 | 125-7197 | 1 | O-Ring |
| 58 | 127-4718 | 1 | Lifter-Engine |
| 59 | 100-6928 | 2 | Bolt |
| 60 | 127-2991 | 3 | Plug-Glow |
| 61 | 127-3768 | 1 | Connector-Plug, Glow |
| 62 | 127-2979 | 3 | Guide |
| 63 | 127-2997 | 3 | Guide-Valve |

# Suction Manifold Assembly

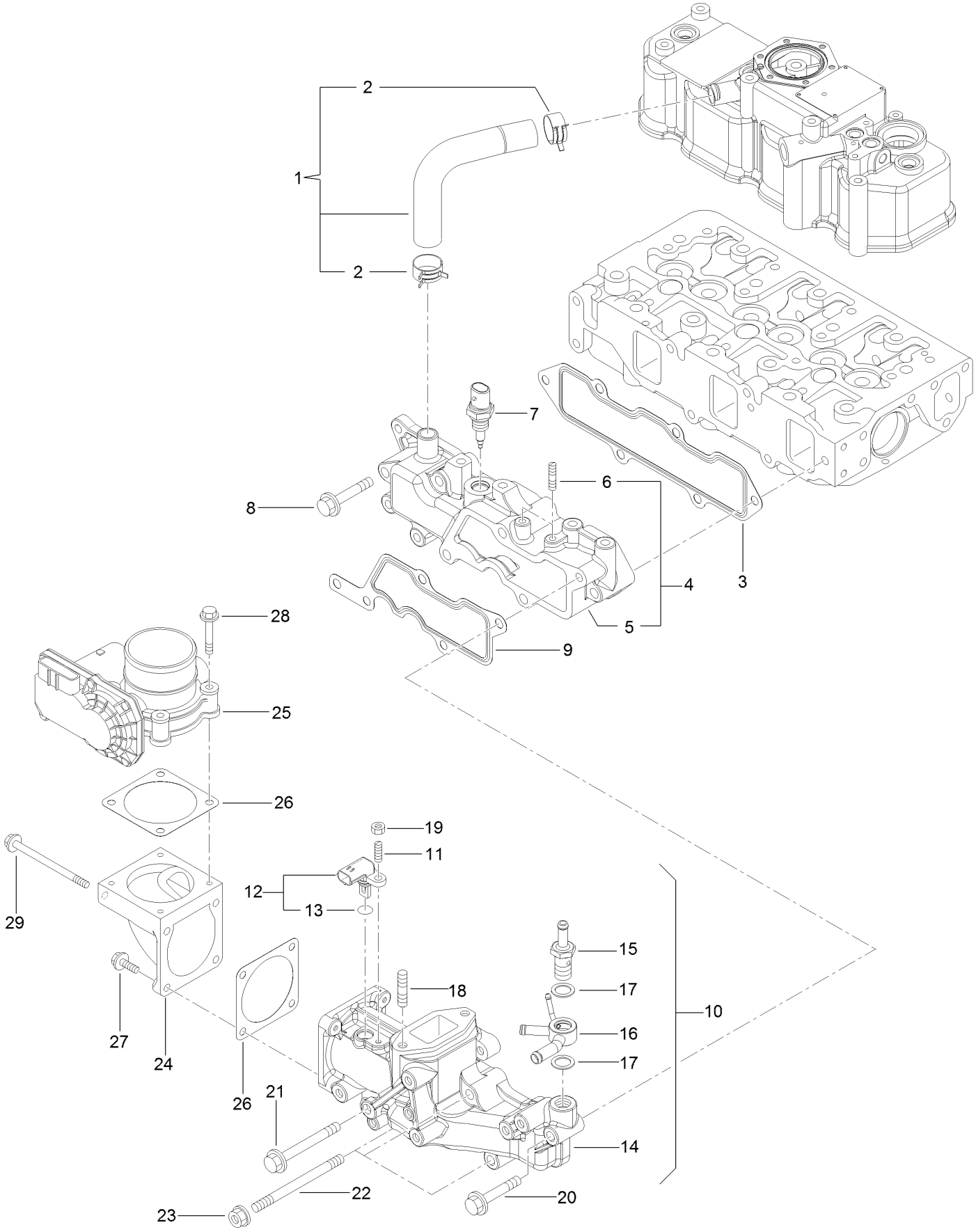

# Suction Manifold Assembly (continued)

| Ref. | Part Number | Qty. | Description |
|---|---|---|---|
| 1 | 127-4704 | 1 | Pipe |
| 2 | 125-7040 | 2 | Clip-Hose |
| 3 | 127-3857 | 1 | Gasket-Manifold, Intake |
| 4 | 127-4722 | 1 | Intake Manifold ASM |
| 5 | 127-4721 | 1 | Manifold-Intake |
| 6 | 127-3180 | 2 | Stud |
| 7 | 127-3031 | 1 | Sensor-Temp, Air |
| 8 | 125-7220 | 3 | Bolt |
| 9 | 127-3034 | 1 | Gasket-Collector |
| 10 | 127-4725 | 1 | Intake Collector ASM |
| 11 | 127-4701 | 1 | Stud |
| 12 | 127-3030 | 1 | Sensor-Temp, Air |
| 13 | 127-3033 | 1 | O-Ring |
| 14 | 127-4724 | 1 | Collector-Intake |
| 15 | 127-3080 | 1 | Joint-Hose |
| 16 | 127-3081 | 1 | Joint-Hose |
| 17 | 127-3166 | 2 | Washer-Seal |
| 18 | 127-4774 | 2 | Stud |
| 19 | 127-4775 | 1 | Nut |
| 20 | 125-7220 | 1 | Bolt |
| 21 | 127-3178 | 1 | Bolt |
| 22 | 127-3182 | 3 | Stud |
| 23 | 125-7229 | 3 | Nut |
| 24 | 127-3035 | 1 | Bend-Inlet |
| 25 | 127-3036 | 1 | Body-Throttle |
| 26 | 127-3037 | 2 | Gasket-Throttle |
| 27 | 125-7209 | 2 | Bolt |
| 28 | 125-7211 | 4 | Bolt |
| 29 | 127-3177 | 2 | Bolt |

# Exhaust Manifold Assembly

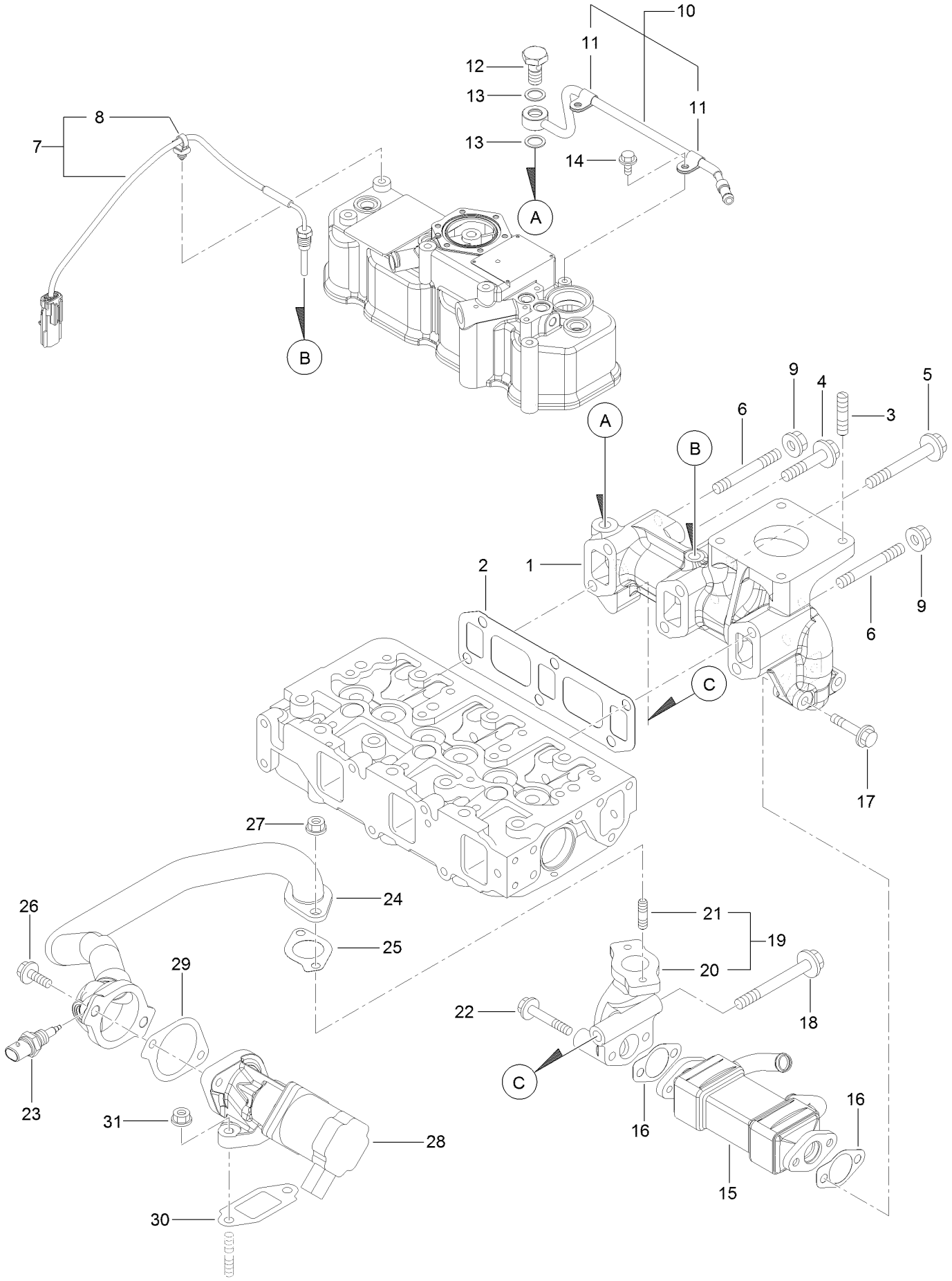

# Exhaust Manifold Assembly (continued)

| Ref. | Part Number | Qty. | Description |
|---|---|---|---|
| 1 | 127-4726 | 1 | Manifold-Exhaust |
| 2 | 127-3775 | 1 | Gasket-Manifold, Exhaust |
| 3 | 127-2984 | 4 | Stud |
| 4 | 127-3094 | 1 | Bolt |
| 5 | 127-3044 | 3 | Bolt-M10 |
| 6 | 127-4756 | 2 | Stud |
| 7 | 127-4729 | 1 | Sensor-Temp, Exhaust |
| 8 | 127-3087 | 1 | Band-Clip |
| 9 | 125-7230 | 2 | Nut |
| 10 | 127-3038 | 1 | Exhaust Pipe ASM |
| 11 | 127-3173 | 2 | Clamp |
| 12 | 127-3039 | 1 | Bolt-Joint, Pipe |
| 13 | 127-3174 | 2 | Gasket |
| 14 | 125-7206 | 2 | Bolt |
| 15 | 127-3042 | 1 | Cooler-E G R |
| 16 | 127-3043 | 2 | Gasket-Cooler, E G R |
| 17 | 127-2976 | 2 | Bolt |
| 18 | 127-3022 | 1 | Bolt-Flange |
| 19 | 127-3048 | 1 | E G R Pipe ASM |
| 20 | 127-3049 | 1 | Pipe-Out, E G R |
| 21 | 125-7043 | 2 | Stud |
| 22 | 125-7220 | 2 | Bolt |
| 23 | 127-3047 | 1 | Sensor-Gas Temp, E G R |
| 24 | 127-3780 | 1 | E G R Pipe ASM |
| 25 | 127-3016 | 1 | Gasket |
| 26 | 125-7215 | 2 | Bolt |
| 27 | 125-7229 | 2 | Nut |
| 28 | 127-3781 | 1 | Valve-E G R |
| 29 | 127-3050 | 1 | Gasket-Intake Valve, E G R |
| 30 | 127-3051 | 1 | Gasket-Out Valve, E G R |
| 31 | 125-7229 | 2 | Nut |

# Diesel Particulate Filter Assembly

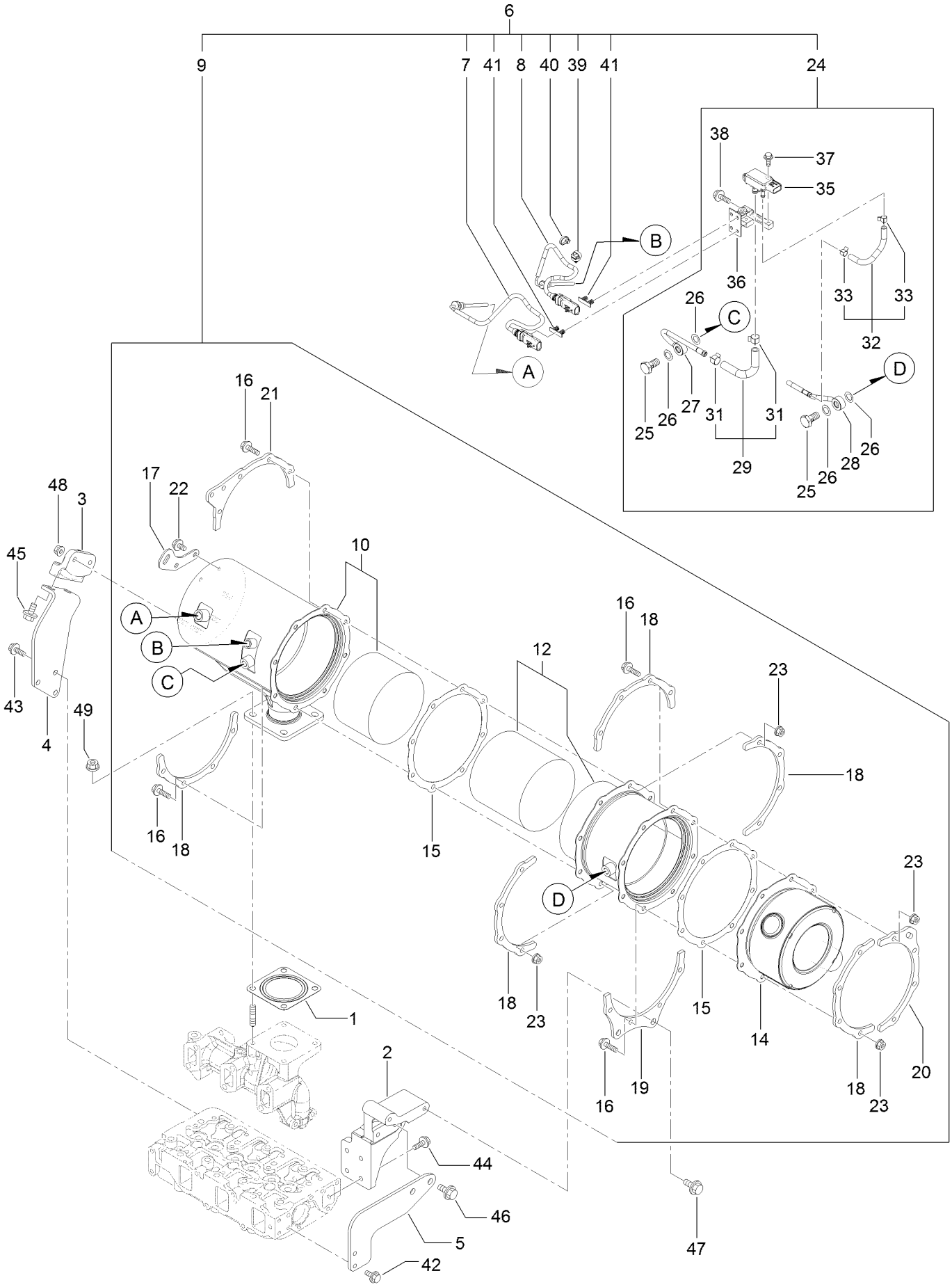

# Diesel Particulate Filter Assembly (continued)

| Ref. | Part Number | Qty. | Description |
|---|---|---|---|
| 1 | 127-2987 | 1 | Gasket-Silencer |
| 2 | 127-4738 | 1 | Stay-D P F |
| 3 | 127-4739 | 1 | Stay-D P F |
| 4 | 127-4740 | 1 | Stay-D P F |
| 5 | 127-4741 | 1 | Stay-D P F |
| 6 | 127-4760 | 1 | D P F Unit |
| 7 | 127-4764 | 1 | Sensor-Temp, Exhaust |
| 8 | 127-4765 | 1 | Sensor-Temp, Exhaust |
| 9 | 127-4759 | 1 | D P F ASM |
| 10 | 127-4732 | 1 | Case-D O C |
| 12 | 127-4734 | 1 | Case-Filter, Soot |
| 14 | 127-3786 | 1 | Silencer-D P F |
| 15 | 127-3859 | 2 | Gasket-D P F |
| 16 | 127-3055 | 16 | Bolt |
| 17 | 127-3788 | 1 | Lifter-D P F |
| 18 | 127-3789 | 5 | Stiffener-D P F, A |
| 19 | 127-4735 | 1 | Stiffener-D P F, B |
| 20 | 127-3792 | 1 | Stiffener-D P F, C |
| 21 | 127-4736 | 1 | Stiffener-D P F, C |
| 22 | 125-7213 | 2 | Bolt |
| 23 | 125-7229 | 16 | Nut |
| 24 | 127-4743 | 1 | Pressure Sensor Unit |
| 25 | 127-3039 | 2 | Bolt-Joint, Pipe |
| 26 | 127-3056 | 4 | Gasket-Sensor |
| 27 | 127-4744 | 1 | Sensor Pipe ASM |
| 28 | 127-4745 | 1 | Sensor Pipe ASM |
| 29 | 127-4747 | 1 | Exhaust Hose ASM |
| 31 | 127-3057 | 2 | Clip-Hose |
| 32 | 127-4748 | 1 | Exhaust Hose ASM |
| 33 | 127-3058 | 2 | Clip-Hose |
| 35 | 127-3060 | 1 | Sensor-Pressure |
| 36 | 127-4750 | 1 | Bracket-Sensor |
| 37 | 125-7208 | 2 | Bolt |
| 38 | 125-7595 | 2 | Bolt |
| 39 | 127-3087 | 1 | Band-Clip |
| 40 | 127-3124 | 1 | Band |
| 41 | 127-3088 | 2 | Clip-Connnector |
| 42 | 100-6928 | 2 | Bolt |
| 43 | 100-6928 | 3 | Bolt |
| 44 | 125-7594 | 4 | Bolt |
| 45 | 127-4773 | 2 | Bolt |
| 46 | 127-4773 | 2 | Bolt |
| 47 | 127-4773 | 2 | Bolt |
| 48 | 125-7229 | 2 | Nut |
| 49 | 125-7230 | 4 | Nut |

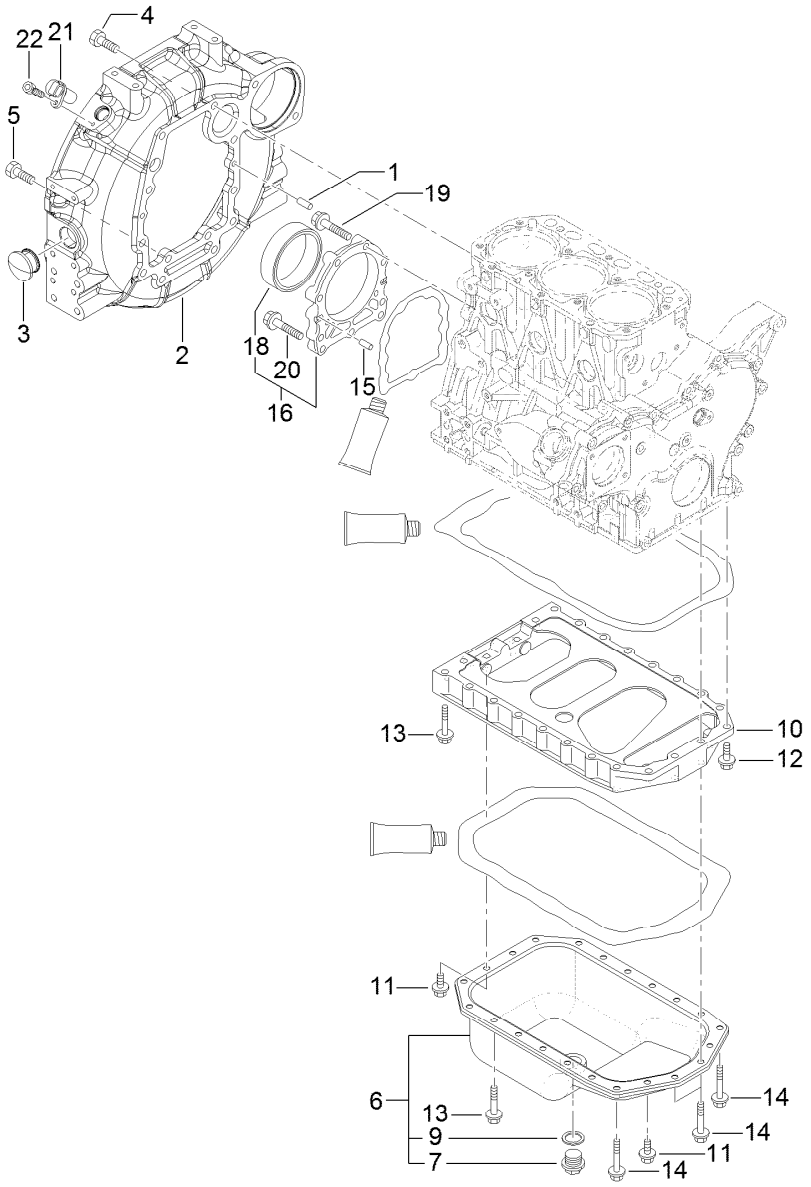


# Flywheel Housing and Oil Sump Assembly

| Ref. | Part Number | Qty. | Description |
|---|---|---|---|
| 1 | 125-6995 | 2 | Pin |
| 2 | 127-4758 | 1 | Housing-Flywheel |
| 3 | 125-6910 | 1 | Cap |
| 4 | 125-7226 | 6 | Bolt |
| 5 | 125-7227 | 4 | Bolt |
| 6 | 127-4711 | 1 | Oil Pan ASM |
| 7 | 125-6912 | 1 | Plug-Drain |
| 9 | 125-7177 | 1 | Washer-Seal |
| 10 | 127-3756 | 1 | Spacer |
| 11 | 100-6928 | 4 | Bolt |

| Ref. | Part Number | Qty. | Description |
|---|---|---|---|
| 12 | 125-7215 | 2 | Bolt |
| 13 | 125-7219 | 16 | Bolt |
| 14 | 125-7220 | 4 | Bolt |
| 15 | 125-6995 | 2 | Pin |
| 16 | 125-6996 | 1 | Case ASM |
| 18 | 125-7106 | 1 | Seal-Oil |
| 19 | 125-7045 | 6 | Bolt |
| 20 | 125-7217 | 3 | Bolt |
| 21 | 127-3062 | 1 | Sensor-Rev, Flywheel |
| 22 | 127-3184 | 1 | Bolt |

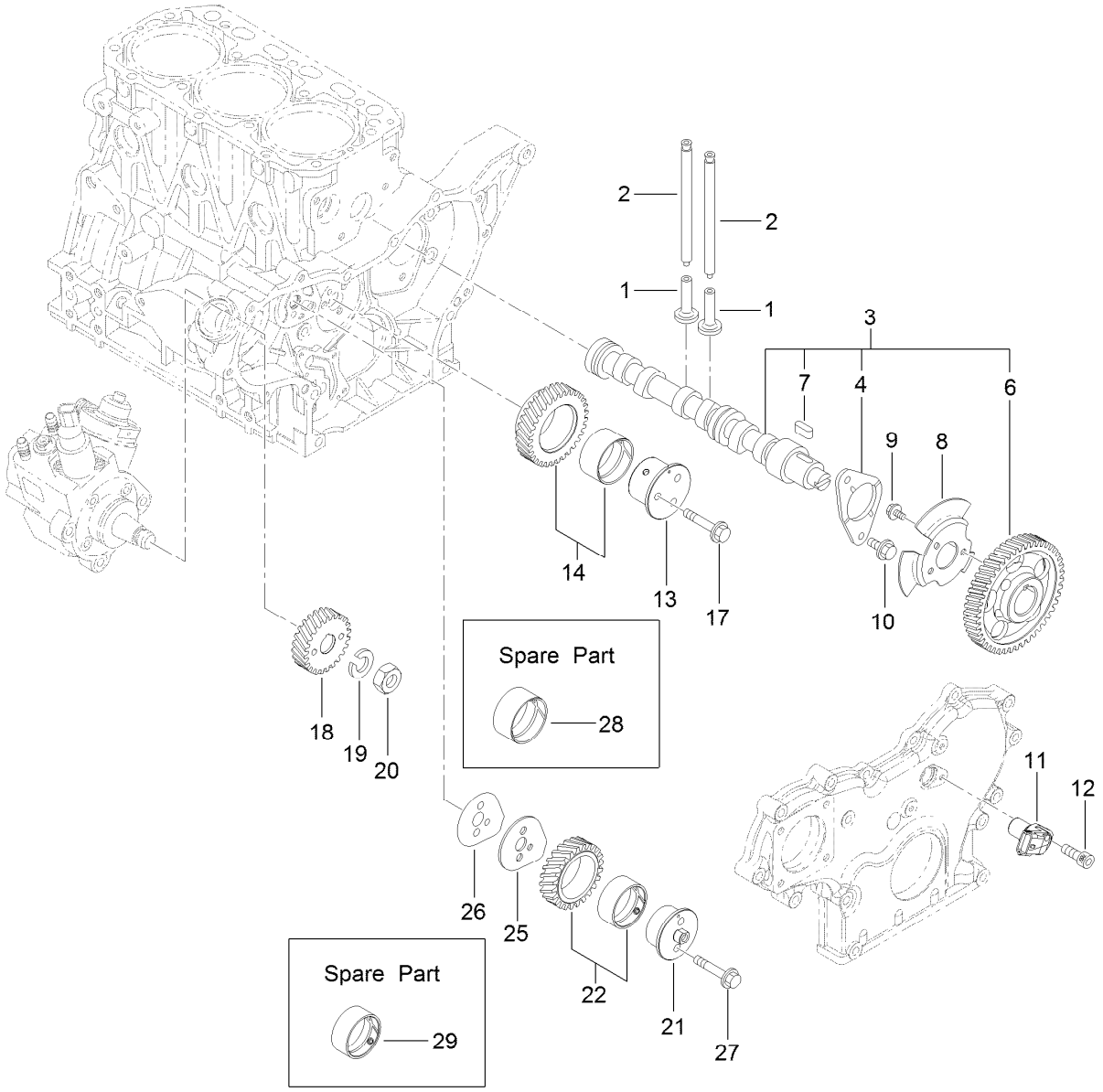


# Camshaft and Driving Gear Assembly

| Ref. | Part Number | Qty. | Description |
|---|---|---|---|
| 1 | 125-7016 | 6 | Tappet |
| 2 | 125-7017 | 6 | Rod-Push |
| 3 | 127-3797 | 1 | Camshaft ASM |
| 4 | 125-7008 | 1 | Metal-Thrust |
| 6 | 127-3052 | 1 | Gear-Camshaft |
| 7 | 125-7185 | 1 | Key |
| 8 | 127-3053 | 1 | Pulser-Camshaft |
| 9 | 125-7205 | 3 | Bolt |
| 10 | 125-7213 | 2 | Bolt |
| 11 | 127-3054 | 1 | Sensor-Rev, Gear |
| 12 | 127-3184 | 1 | Bolt |
| 13 | 127-3063 | 1 | Shaft-Idle, Gear A |

| Ref. | Part Number | Qty. | Description |
|---|---|---|---|
| 14 | 127-3066 | 1 | Idle Gear A ASM |
| 17 | 125-7219 | 3 | Bolt |
| 18 | 127-3070 | 1 | Gear-Pump, Supply |
| 19 | 127-3167 | 1 | Washer-Spring |
| 20 | 127-3185 | 1 | Nut-Lock |
| 21 | 127-3064 | 1 | Shaft-Idle, Gear B |
| 22 | 127-3067 | 1 | Idle Gear B ASM |
| 25 | 127-3068 | 1 | Plate-Idle, Shaft |
| 26 | 127-3069 | 1 | Gasket-Idle, Shaft B |
| 27 | 125-7218 | 2 | Bolt |
| 28 | 125-6927 | 1 | Bushing |
| 29 | 127-3065 | 1 | Bushing |

# Crankshaft and Piston Assembly

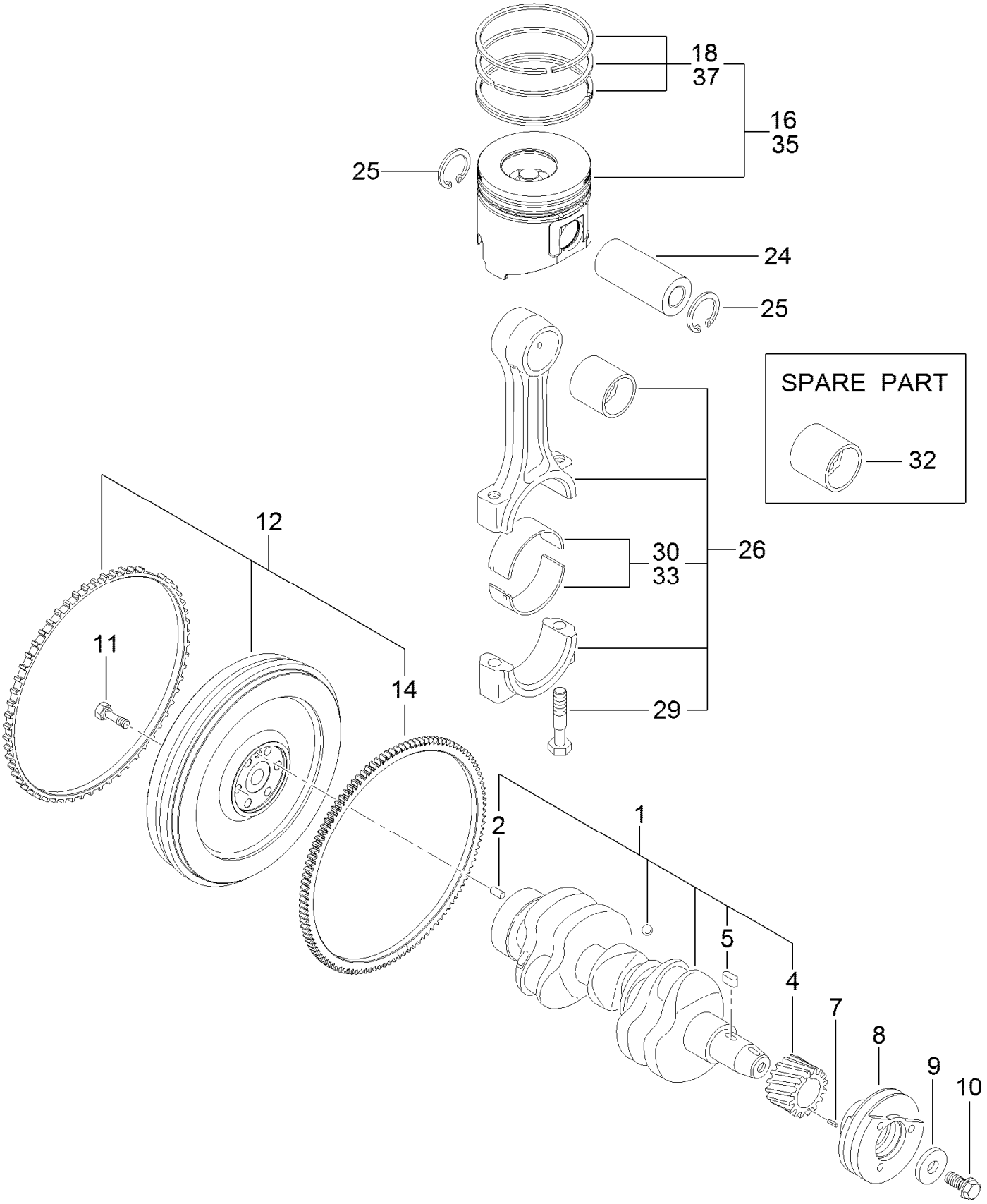

# Crankshaft and Piston Assembly (continued)

| Ref. | Part Number | Qty. | Description |
|---|---|---|---|
| 1 | 127-3800 | 1 | Crankshaft ASM |
| 2 | 125-6995 | 1 | Pin |
| 4 | 125-6937 | 1 | Gear |
| 5 | 125-7185 | 1 | Key |
| 7 | 125-7182 | 1 | Pin-Spring |
| 8 | 127-3801 | 1 | Pulley-V |
| 9 | 125-7109 | 1 | Washer |
| 10 | 125-6956 | 1 | Bolt |
| 11 | 125-6951 | 6 | Bolt |
| 12 | 127-4761 | 1 | Flywheel ASM |
| 14 | 127-4703 | 1 | Gear |

| Ref. | Part Number | Qty. | Description |
|---|---|---|---|
| 16 | 127-4766 | 3 | Piston ASM |
| 18 | 127-4751 | 3 | Piston Ring ASM |
| 24 | 125-7030 | 3 | Pin |
| 25 | 125-7180 | 6 | Ring |
| 26 | 125-7242 | 3 | Connecting Rod ASM |
| 29 | 125-6955 | 6 | Bolt |
| 30 | 125-7018 | 3 | Pin-Crank |
| 32 | 125-6997 | 3 | Pin-Piston |
| 33 | 125-7019 | 3 | Pin-Crank (.25) |
| 35 | 127-4767 | 3 | Piston ASM (0.25 O S) |
| 37 | 127-4752 | 3 | Ring Set (0.25 O S) |

# Cooling Water System Assembly

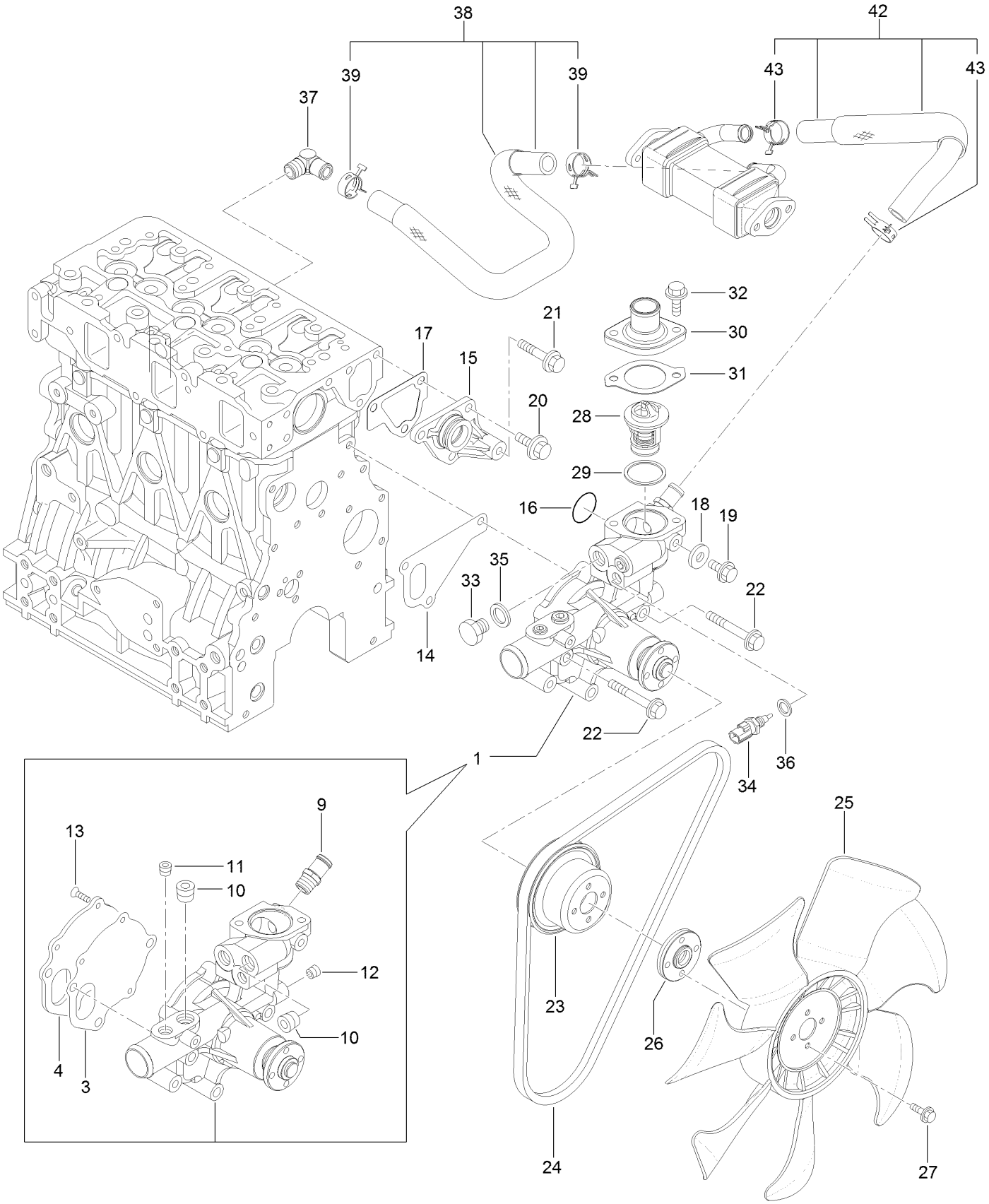

# Cooling Water System Assembly (continued)

| Ref. | Part Number | Qty. | Description |
|---|---|---|---|
| 1 | 127-3071 | 1 | Water Pump ASM |
| 3 | 125-6998 | 1 | Gasket |
| 4 | 125-6999 | 1 | Plate |
| 9 | 127-3017 | 1 | Joint |
| 10 | 125-7123 | 2 | Plug |
| 11 | 127-3175 | 1 | Plug |
| 12 | 125-7195 | 1 | Plug |
| 13 | 125-7234 | 3 | Screw |
| 14 | 125-7047 | 1 | Gasket |
| 15 | 125-6986 | 1 | Joint |
| 16 | 125-7048 | 1 | O-Ring |
| 17 | 125-6978 | 1 | Gasket |
| 18 | 125-7192 | 1 | Gasket |
| 19 | 93-0362 | 1 | Bolt |
| 20 | 100-6928 | 3 | Bolt |
| 21 | 125-7219 | 1 | Bolt |
| 22 | 125-7222 | 3 | Bolt |
| 23 | 127-4712 | 1 | V-Pulley |

| Ref. | Part Number | Qty. | Description |
|---|---|---|---|
| 24 | 127-4771 | 1 | V-Belt |
| 25 | 127-4702 | 1 | Fan |
| 26 | 127-3810 | 1 | Spacer |
| 27 | 125-7209 | 4 | Bolt |
| 28 | 125-7029 | 1 | Thermostat |
| 29 | 125-7026 | 1 | Gasket |
| 30 | 125-7034 | 1 | Cover |
| 31 | 125-7110 | 1 | Gasket |
| 32 | 125-7594 | 2 | Bolt |
| 33 | 125-6953 | 1 | Plug |
| 34 | 125-7124 | 1 | Sensor-Thermostat, CW |
| 35 | 125-6979 | 1 | Gasket |
| 36 | 125-7176 | 1 | Washer-Seal |
| 37 | 127-4705 | 1 | Elbow |
| 38 | 127-4757 | 1 | E G R-C Pipe ASM |
| 39 | 127-3020 | 2 | Clip-Hose |
| 42 | 127-3811 | 1 | CW Pipe ASM |
| 43 | 127-3020 | 2 | Clip-Hose |

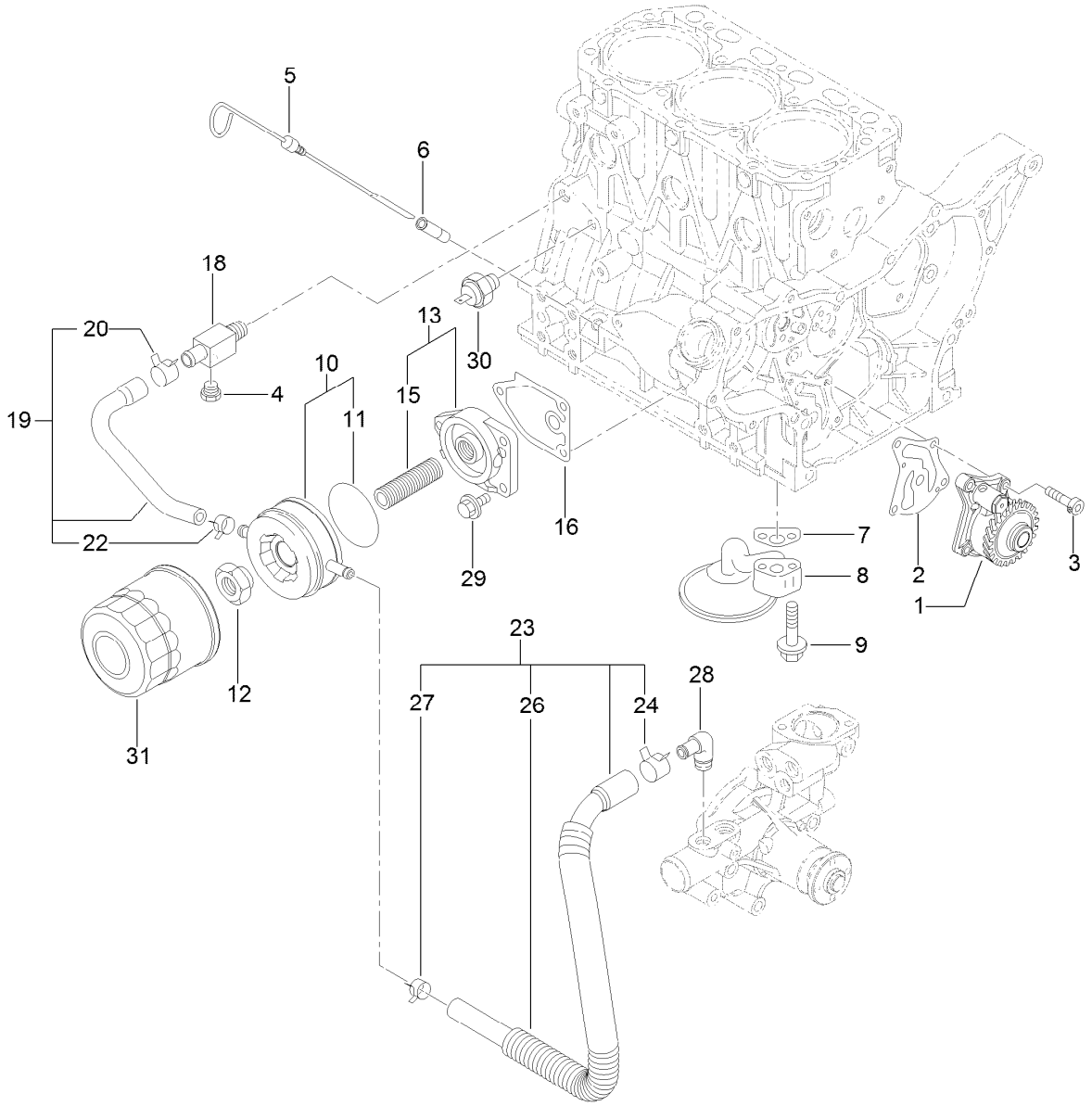


# Lubrication and Oil System Assembly

| Ref. | Part Number | Qty. | Description |
|---|---|---|---|
| 1 | 127-4753 | 1 | Oil Pump ASM |
| 2 | 127-3004 | 1 | Gasket |
| 3 | 125-7232 | 4 | Bolt |
| 4 | 125-7171 | 1 | Plug-Drain |
| 5 | 125-6987 | 1 | Dipstick |
| 6 | 125-6954 | 1 | Guide-Dipstick |
| 7 | 125-7022 | 1 | Gasket |
| 8 | 127-3803 | 1 | Pipe ASM |
| 9 | 125-7217 | 2 | Bolt |
| 10 | 125-7074 | 1 | Cooler ASM |
| 11 | 125-7075 | 1 | O-Ring |
| 12 | 125-7041 | 1 | Nut-Cooler, Oil |
| 13 | 125-6989 | 1 | Bracket ASM |
| 15 | 125-7042 | 1 | Stud |

| Ref. | Part Number | Qty. | Description |
|---|---|---|---|
| 16 | 125-7024 | 1 | Gasket |
| 18 | 125-6990 | 1 | Joint |
| 19 | 125-7078 | 1 | Pipe ASM |
| 20 | 125-7162 | 1 | Clip |
| 22 | 125-7191 | 1 | Clamp-Hose |
| 23 | 127-3804 | 1 | Pipe ASM |
| 24 | 125-7162 | 1 | Clip |
| 26 | 127-3805 | 1 | Tube |
| 27 | 125-7191 | 1 | Clamp-Hose |
| 28 | 125-7001 | 1 | Elbow |
| 29 | 125-7595 | 3 | Bolt |
| 30 | 125-6918 | 1 | Switch-Oil |
| 31 | 125-7025 | 1 | Filter-Engine, Oil |

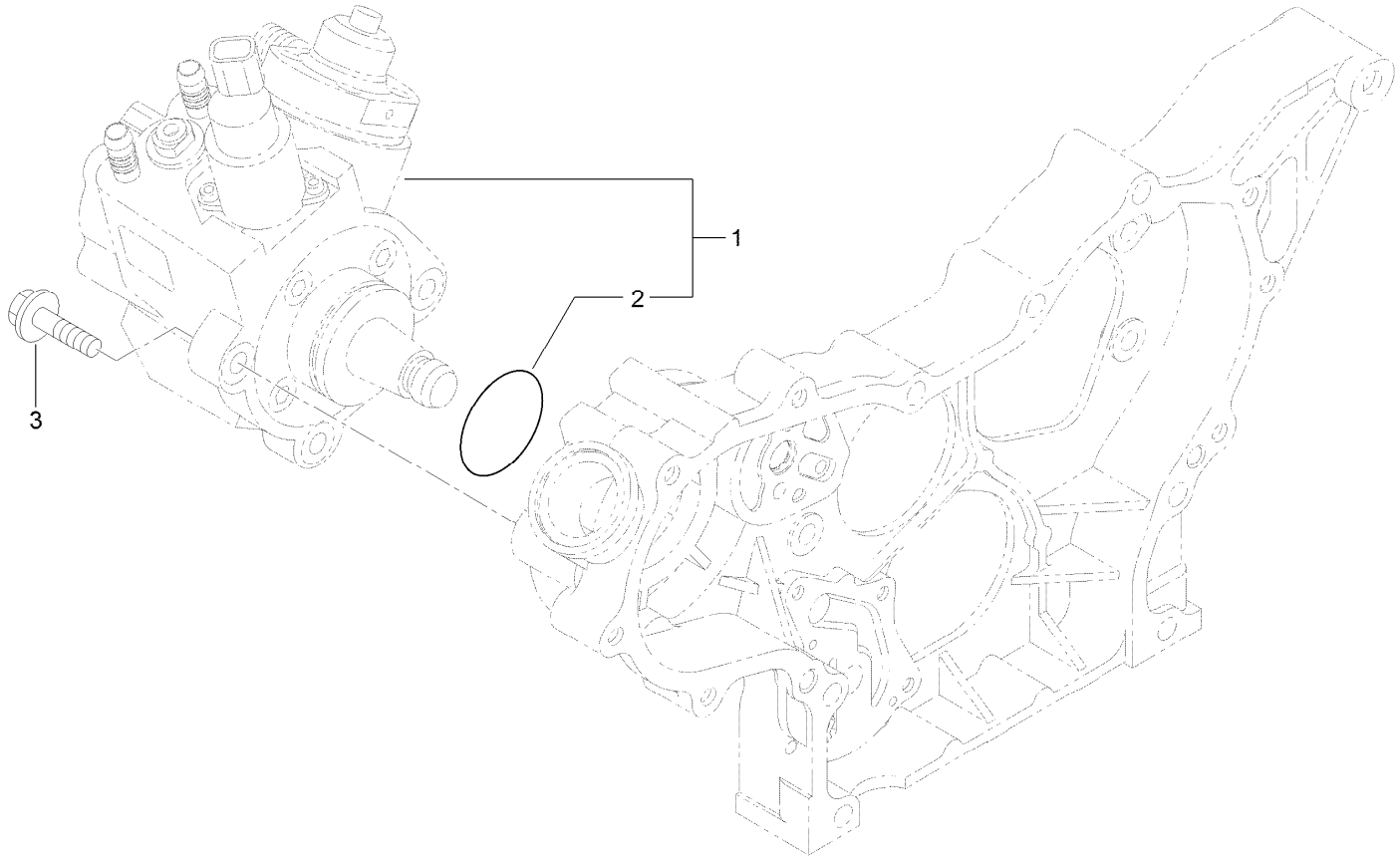


# Fuel System Assembly

| *Ref.* | *Part Number* | *Qty.* | *Description* |
|---|---|---|---|
| 1 | 127-3073 | 1 | Fuel Pump ASM |
| 2 | 127-3074 | 1 | O-Ring |
| 3 | 125-7216 | 3 | Bolt |

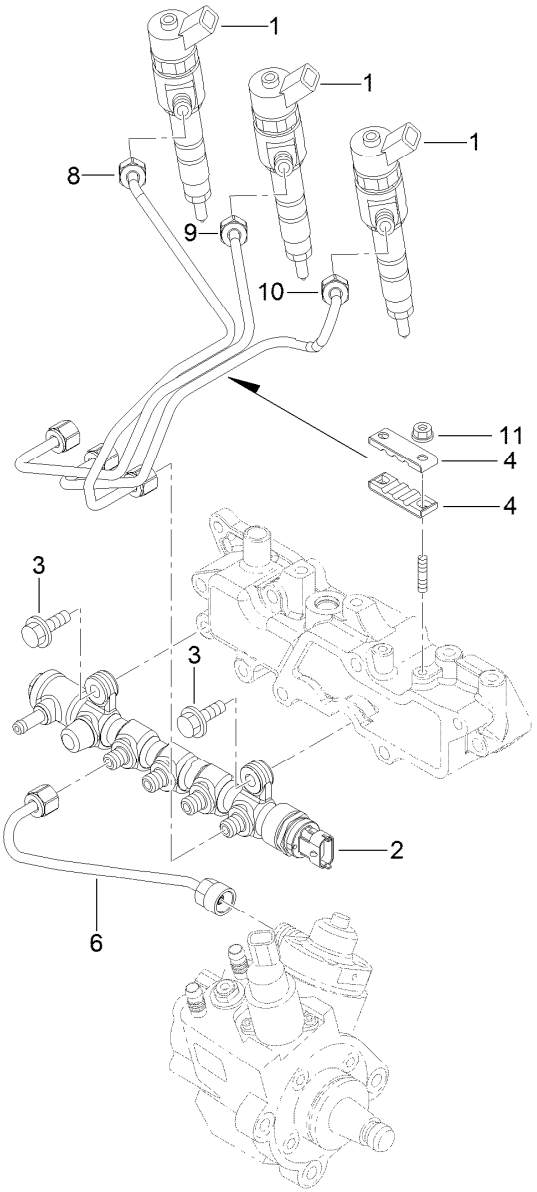


# Fuel Injection Valve Assembly

| *Ref.* | *Part Number* | *Qty.* | *Description* |
|---|---|---|---|
| 1 | 127-4754 | 3 | Injector ASM |
| 2 | 127-3812 | 1 | Rail ASM |
| 3 | 125-7215 | 2 | Bolt |
| 4 | 127-3813 | 2 | Retainer |
| 6 | 127-3082 | 1 | Rail In Pipe ASM |
| 8 | 127-3814 | 1 | Injection Pipe ASM |
| 9 | 127-3083 | 1 | Injection Pipe ASM |
| 10 | 127-3084 | 1 | Injection Pipe ASM |
| 11 | 125-7231 | 2 | Nut |

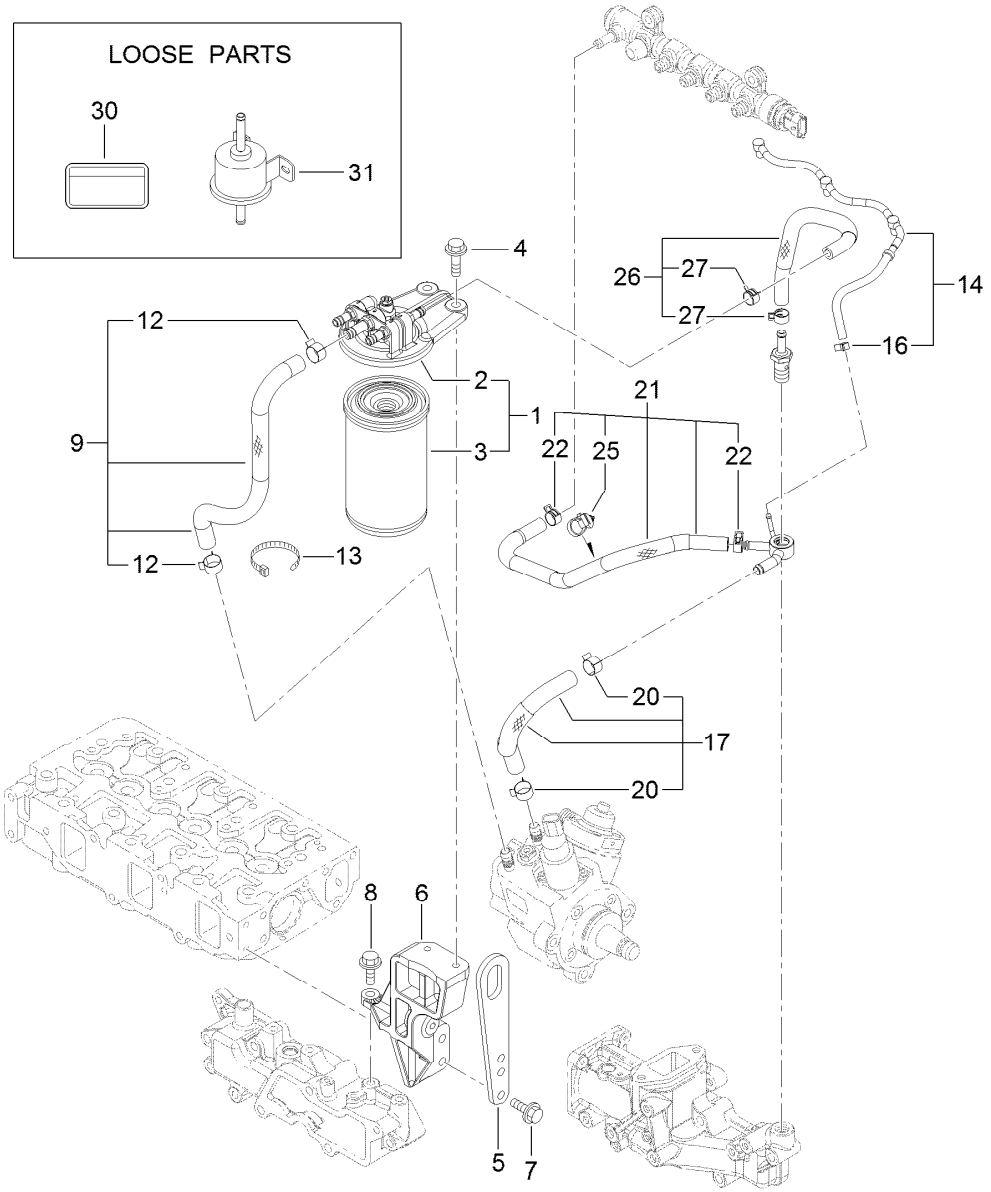


# Fuel Line Assembly

| Ref. | Part Number | Qty. | Description |
|---|---|---|---|
| 1 | 127-3075 | 1 | Fuel/Oil Filter ASM |
| 2 | 127-3076 | 1 | Fuel/Oil Filter Bracket ASM |
| 3 | 125-8752 | 1 | Filter-Fuel/Oil |
| 4 | 125-7216 | 2 | Bolt |
| 5 | 125-7111 | 1 | Lifter |
| 6 | 127-3815 | 1 | Filter Bracket ASM |
| 7 | 125-7215 | 2 | Bolt |
| 8 | 125-7215 | 1 | Bolt |
| 9 | 127-3077 | 1 | Fuel Pipe ASM |
| 12 | 125-7191 | 2 | Clamp-Hose |
| 13 | 127-2981 | 1 | Band |

| Ref. | Part Number | Qty. | Description |
|---|---|---|---|
| 14 | 127-3816 | 1 | Fuel/Oil Return Pipe ASM |
| 16 | 127-3172 | 1 | Clamp-Hose |
| 17 | 127-3078 | 1 | Fuel Pipe ASM |
| 20 | 125-7191 | 2 | Clamp-Hose |
| 21 | 127-3817 | 1 | Fuel Pipe ASM |
| 22 | 127-2950 | 2 | Clip-Hose |
| 25 | 127-3087 | 1 | Band-Clip |
| 26 | 127-3079 | 1 | Fuel Pipe ASM |
| 27 | 127-2950 | 2 | Clip-Hose |
| 30 | 125-6900 | 1 | Label-Caution, Fuel Oil |
| 31 | 127-3008 | 1 | Fuel Feed Pump ASM |

# Starting Motor Assembly

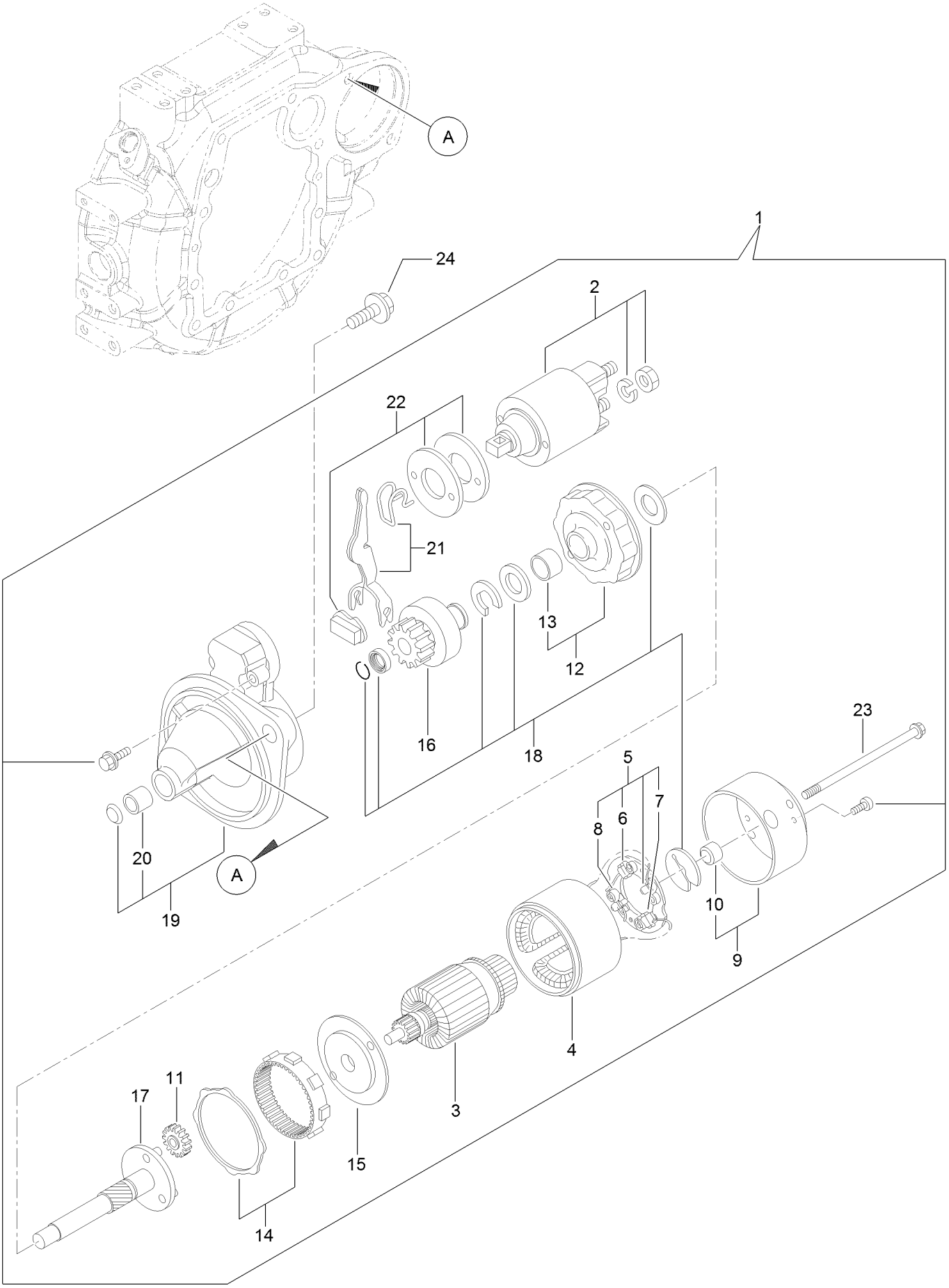

# Starting Motor Assembly (continued)

| Ref. | Part Number | Qty. | Description |
|---|---|---|---|
| 1 | 127-3818 | 1 | Starter ASM |
| 2 | 127-3819 | 1 | Switch ASM |
| 3 | 127-3820 | 1 | Armature ASM |
| 4 | 127-3821 | 1 | Yoke ASM |
| 5 | 127-3822 | 1 | Brush Holder ASM |
| 6 | 127-3823 | 2 | Brush |
| 7 | 127-3824 | 1 | Brush Set |
| 8 | 127-3825 | 4 | Spring |
| 9 | 127-3826 | 1 | Cover ASM |
| 10 | 127-3827 | 1 | Metal |
| 11 | 127-3828 | 3 | Gear |
| 12 | 127-3829 | 1 | Bracket |
| 13 | 127-3830 | 1 | Bracket |
| 14 | 127-3831 | 1 | Gear |
| 15 | 127-3832 | 1 | Bracket |
| 16 | 127-3833 | 1 | Pinion ASM |
| 17 | 127-3834 | 1 | Shaft |
| 18 | 127-3835 | 1 | Washer Set |
| 19 | 127-3836 | 1 | Case ASM |
| 20 | 127-3837 | 1 | Metal-Starter |
| 21 | 127-3838 | 1 | Lever Set |
| 22 | 127-3839 | 1 | Dust Cover ASM |
| 23 | 127-3840 | 2 | Bolt-Through |
| 24 | 125-7225 | 2 | Bolt |

# Generator Assembly

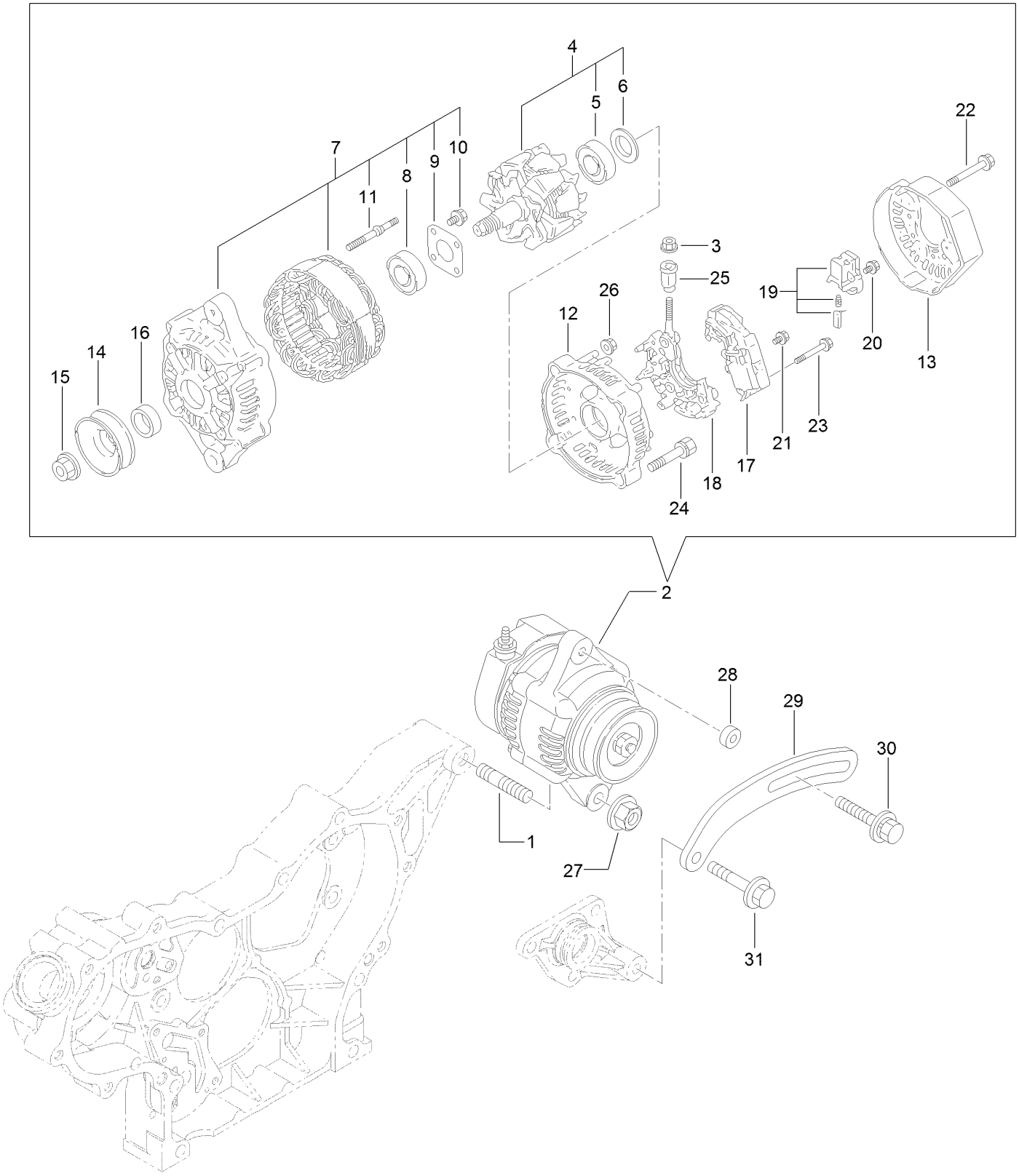

# Generator Assembly (continued)

| Ref. | Part Number | Qty. | Description |
|---|---|---|---|
| 1 | 127-3011 | 1 | Stud |
| 2 | 127-3841 | 1 | Generator |
| 3 | 127-3190 | 1 | Nut |
| 4 | 127-3843 | 1 | Rotor ASM |
| 5 | 127-2983 | 1 | Bearing-Ball |
| 6 | 127-2962 | 1 | Cover |
| 7 | 127-3844 | 1 | Frame ASM |
| 8 | 127-2958 | 1 | Bearing-Ball |
| 9 | 127-2959 | 1 | Plate-Retainer |
| 10 | 127-2960 | 4 | Screw |
| 11 | 127-2961 | 2 | Stud |
| 12 | 127-3845 | 1 | Frame |
| 13 | 127-3846 | 1 | Cover |
| 14 | 127-2954 | 1 | Pulley |
| 15 | 127-2955 | 1 | Nut |
| 16 | 127-2957 | 1 | Collar |
| 17 | 127-3847 | 1 | Regulator ASM |
| 18 | 127-3848 | 1 | Holder |
| 19 | 127-2993 | 1 | Holder |
| 20 | 127-2965 | 6 | Screw |
| 21 | 127-2966 | 1 | Screw |
| 22 | 127-2967 | 3 | Bolt |
| 23 | 127-2968 | 2 | Screw |
| 24 | 127-2969 | 2 | Bolt |
| 25 | 127-2970 | 1 | Bushing-Insulation |
| 26 | 127-2971 | 2 | Nut |
| 27 | 125-7230 | 1 | Nut |
| 28 | 125-6947 | 1 | Spacer |
| 29 | 127-2977 | 1 | Adjuster |
| 30 | 125-7134 | 1 | Bolt |
| 31 | 125-7219 | 1 | Bolt |

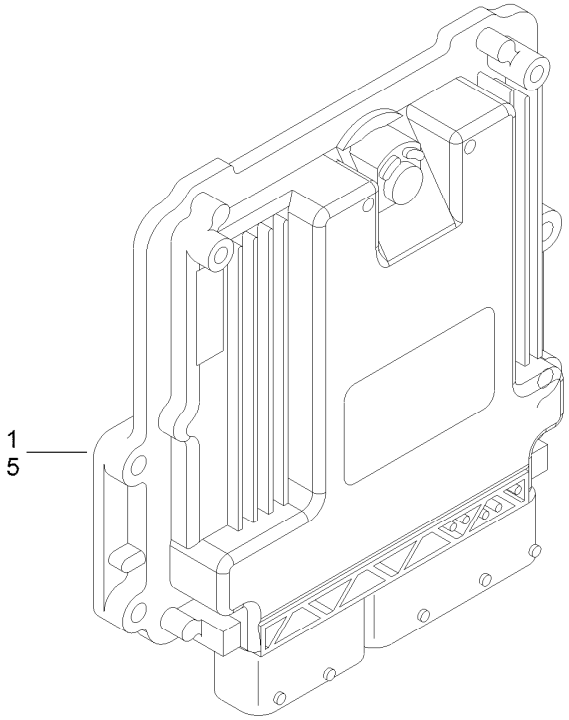


# Electronic Control Unit Assembly

| *Ref.* | *Part Number* | *Qty.* | *Description* |
|---|---|---|---|
| 1 | 127-4763 | 1 | E C U ASM |
| 5 | 127-3085 | 1 | E C U ASM |

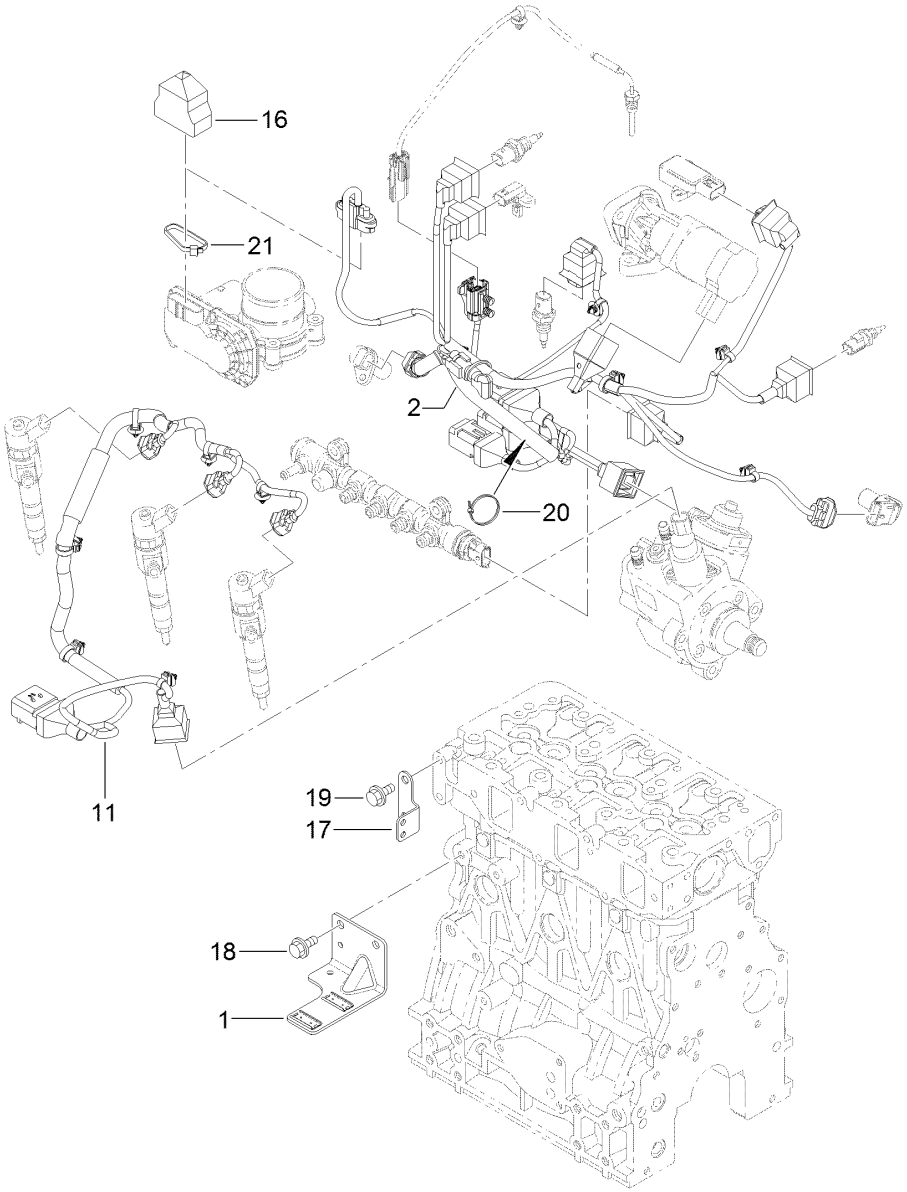


# Electric Parts Assembly

| *Ref.* | *Part Number* | *Qty.* | *Description* |
|---|---|---|---|
| 1 | 127-3086 | 1 | Bracket-Connector |
| 2 | 127-4755 | 1 | Harness |
| 11 | 127-3851 | 1 | Harness |
| 16 | 127-3089 | 1 | Boot-Type, Cap |
| 17 | 127-3090 | 1 | Bracket-Harness |
| 18 | 93-0362 | 2 | Bolt |
| 19 | 93-0362 | 2 | Bolt |
| 20 | 127-3187 | 1 | Band |
| 21 | 127-3188 | 1 | Band |

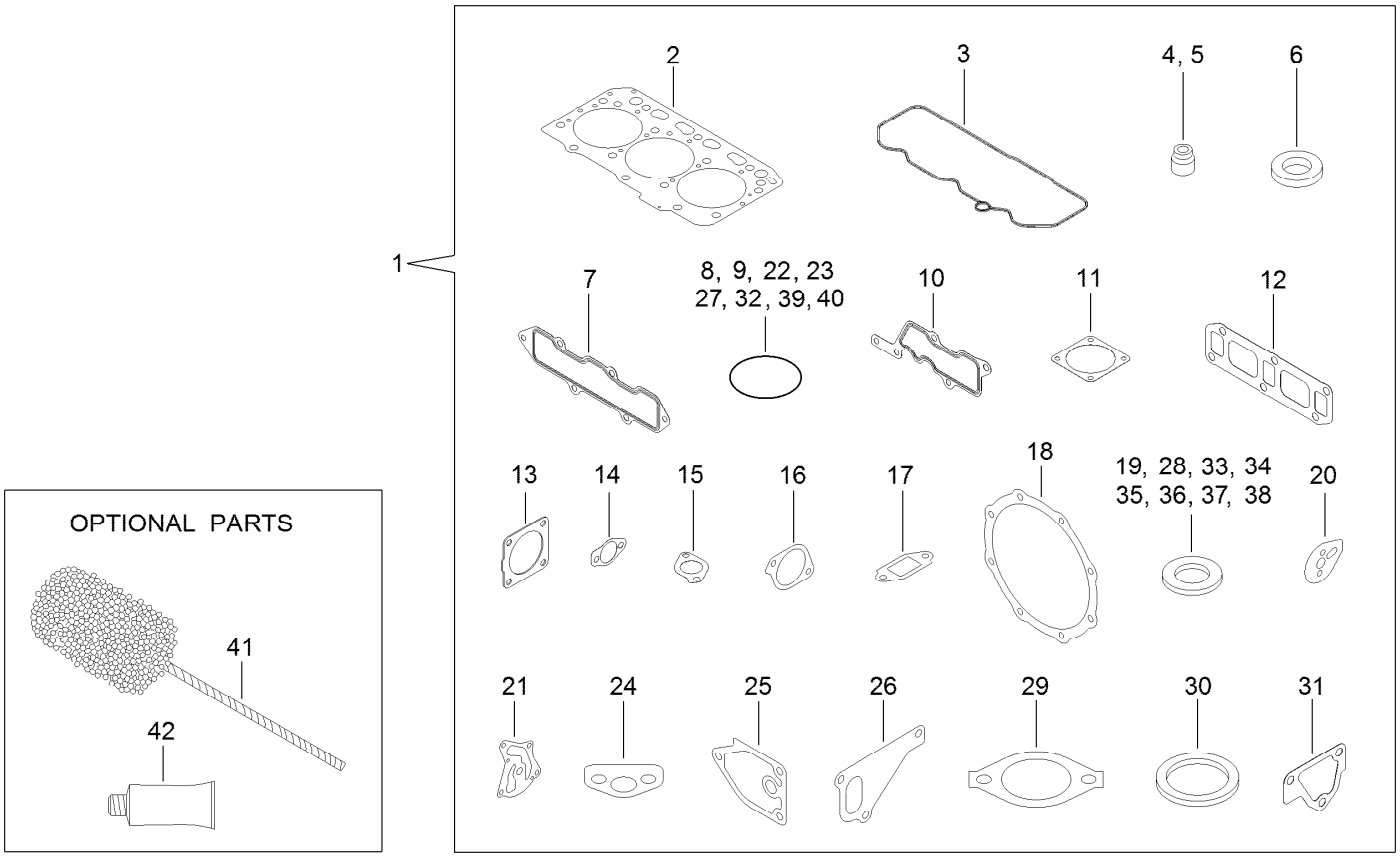


# Gasket Set

| Ref. | Part Number | Qty. | Description |
|---|---|---|---|
| 1 | 127-4776 | 1 | Gasket Kit |
| 2 | 127-4716 | 1 | Head Gasket ASM |
| 3 | 127-3856 | 1 | Gasket-Valve Cover |
| 4 | 127-2986 | 3 | Seal-Stem, Valve |
| 5 | 127-3027 | 3 | Seal-Stem, Valve |
| 6 | 127-3021 | 3 | Gasket-Injector |
| 7 | 127-3857 | 1 | Gasket-Manifold, Intake |
| 8 | 127-3032 | 2 | O Ring-Sensor, Pressure |
| 9 | 127-3033 | 1 | O-Ring |
| 10 | 127-3034 | 1 | Gasket-Collector |
| 11 | 127-3037 | 2 | Gasket-Throttle |
| 12 | 127-3775 | 1 | Gasket-Manifold, Exhaust |
| 13 | 127-2987 | 1 | Gasket-Silencer |
| 14 | 127-3043 | 2 | Gasket-Cooler, E G R |
| 15 | 127-3016 | 1 | Gasket |
| 16 | 127-3050 | 1 | Gasket-Intake Valve, E G R |
| 17 | 127-3051 | 1 | Gasket-Out Valve, E G R |
| 18 | 127-3859 | 2 | Gasket-D P F |
| 19 | 127-3056 | 4 | Gasket-Sensor |
| 20 | 127-3069 | 1 | Gasket-Idle, Shaft B |
| 21 | 127-3004 | 1 | Gasket |

| Ref. | Part Number | Qty. | Description |
|---|---|---|---|
| 22 | 125-6909 | 2 | O-Ring |
| 23 | 127-2973 | 1 | O-Ring |
| 24 | 125-7022 | 1 | Gasket |
| 25 | 125-7024 | 1 | Gasket |
| 26 | 125-7047 | 1 | Gasket |
| 27 | 125-7048 | 1 | O-Ring |
| 28 | 125-6979 | 1 | Gasket |
| 29 | 125-7110 | 1 | Gasket |
| 30 | 125-7026 | 1 | Gasket |
| 31 | 125-6978 | 1 | Gasket |
| 32 | 127-3074 | 1 | O-Ring |
| 33 | 125-7174 | 1 | Washer-Seal |
| 34 | 125-7176 | 1 | Washer-Seal |
| 35 | 127-3166 | 2 | Washer-Seal |
| 36 | 125-7177 | 1 | Washer-Seal |
| 37 | 125-7192 | 1 | Gasket |
| 38 | 127-3174 | 2 | Gasket |
| 39 | 93-0418 | 3 | O-Ring |
| 40 | 125-7197 | 2 | O-Ring |
| 41 | 127-3000 | 1 | Hone |
| 42 | 125-7248 | 1 | Gasket-Liquid |

# Attachments and Accessories

## For 30695 Groundsmaster 7210 Series Traction Unit

| Product Name | Model/Part |
|---|---|
| Auxiliary Hydraulic Power Kit | 30380 |
| Auxiliary Power Unit | 30382 |
| Blade Crate (Snowplow), ATV Poly S | STB13567B |
| Tooth Rake | 08751 |
| Finish Grader | 08754 |
| Drag Mat Carrier System | 08756 |
| Steel Drag Mat | 08757 |
| Coco Drag Mat | 08758 |
| Premium Transmission/Hydraulic Tractor Fluid (55 Gallon Drum) | 108-1183 |
| Premium Transmission/Hydraulic Tractor Fluid (5 Gallon Pail) | 108-1184 |
| Green Diesel Cap | 107-2172 |
| Yellow Hydraulic Cap | 107-1576 |
| 5in Air Cleaner Safety Element | 114-4057 |
| Overflow Tank Kit | 117-5570 |
| Brake Service Kit | 120-0015 |
| Jack-Stand Kit | 30483 |
| Fender Kit | 117-9170 |
| Premium Engine Oil 15w40 (5 Gallon Pail) | 121-6395 |
| Polar Trac Cab | 30474 |
| Premium Engine Oil 15w40 (55 Gallon Drum) | 121-6394 |
| V-Plow Mounting Kit | 30378 |
| Polar Trac Kit | 30675 |
| 48in V-Plow | 30750 |
| Plow Side Kit | MSC14175 |
| Dark Metallic Gray Aerosol Paint | 361-12 |
| New Red Paint - Gallon | 361-11 |
| Air Dry Red Paint - Qt | 5340 |
| 42-Pound Weight | 114-4096 |
| MVP Filter Kit | 30261 |
| Gasket-Cover, Housing | 30810 |
| Hitch Kit | 130-8718 |
| Wheel and Tire ASM | 110-6406 |
| Weight Mount Bracket Kit | 114-4090 |
| Weight Bracket Kit | 125-2670 |
| Universal Sunshade | 30349 |
| Tire-Lug | 103-6771 |
| Slow Moving Vehicle Kit | 114-4050 |
| North American Road Light Kit | 30374 |
| Recycler Kit, 60in Side Discharge Deck | 30348 |
| CE Kit, Grass Collection System | 117-9249 |
| 60in Side Discharge Mower | 30456 |
| Baffle, Blower Housing | 30658 |
| Semi-Gloss Black Spray Paint | 361-9 |
| Blade-Belt Kit | 105-7270 |
| 62in Rear Discharge Completion Kit | 30463 |
| 62in Guardian Recycler Completion Kit | 30306 |

# Attachments and Accessories (continued)

62in Rotary Mower ..... 30457
62in CE Mower Cover Kit ..... 30683
Blade-Belt Kit, 72in Guardian Only ..... 105-7271
72in Rear Discharge Completion Kit ..... 30466
72in Guardian Recycler Completion Kit ..... 30304
72in Guardian Fine Recycler Completion Kit ..... 30346
72in Base Deck ..... 30353
72in Guardian and Rear Discharge CE Mower Cover Kit ..... 30685
Leaf Mulching Kit ..... 108-5273
Recycler Kit, 72in Side Discharge Deck ..... 30347
Striping Kit ..... 105-7273
72in Side Discharge Deck ..... 30481
72in Side Discharge Mower (CE) ..... 30354
CE Kit, 72in Side Deck With French Guards ..... 30679
100in Rear Discharge Deck ..... 31101
Adapter Kit for 100in Rear Discharge Deck ..... 31104
Leaf Mulching Kit for 100in Rear Discharge Deck ..... 31105
100in CE Mower Cover Kit ..... 30687

**Notes:**

TORO®

Count on it.