Form No. 3326-129

TORO®

CCR 2450 GTS®
CCR 3650 GTS®

Snowthrower

Model No. 38535—220000001 and Up
Model No. 38536—220000001 and Up
Model No. 38537—220000001 and Up
Model No. 38538—220000001 and Up

Operator's Manual

CE

International English (GB)

This spark ignition system complies with Canadian ICES-002.

Ce système d'allumage par étincelle de véhicule est conforme à la norme NMB-002 du Canada.

Contents

	Page
Introduction	2
Safety	3
Safe Operating Practices	3
Toro Snowthrower Safety	4
Sound Pressure Level	4
Sound Power Level	4
Vibration Level	4
Safety and Instruction Decals	5
Assembly	7
Loose Parts	7
Installing the Wheels	8
Installing the Handle	8
Installing the Discharge Chute	9
Installing the Chute Crank	10
Before Starting	11
Mixing Gasoline and Oil	11
Filling the Fuel Tank	12
Operation	12
Operating Controls	12
Starting the Engine	12
Stopping the Engine	13
Starting the Rotor Blades	13
Stopping the Rotor Blades	13
Adjusting the Discharge Chute	13
Snowthrowing Tips	14
Maintenance	15
Recommended Maintenance Schedule	15
Adjusting the Control Cable	16
Replacing the Rotor Blades	17
Replacing the Scraper	19
Replacing the Spark Plug	19
Replacing the Drive Belt	20
Emptying the Fuel Tank	20
Storage	21
Preparing the Fuel System	21
Preparing the Engine	21
Preparing the Snowthrower	21
Folding the Handle	21
Troubleshooting	22

Introduction

Read this manual carefully to learn how to operate and maintain your product properly. The information in this manual can help you and others avoid injury and product damage. Although Toro designs and produces safe products, you are responsible for operating the product properly and safely.

Whenever you need service, genuine Toro parts, or additional information, contact an Authorized Service Dealer or Toro Customer Service and have the model and serial numbers of your product ready. Figure 1 illustrates the location of the model and serial numbers on the product.

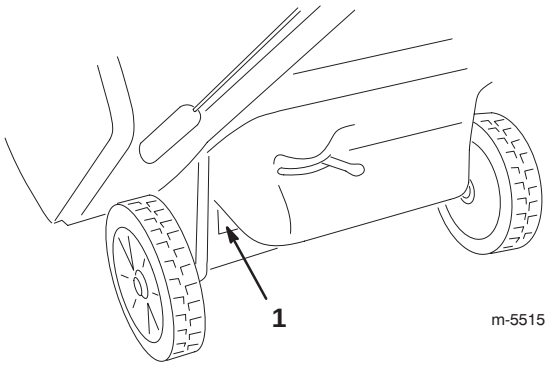

Figure 1

1. Location of the model and serial numbers

Write the product model and serial numbers in the space below:

Model No. _____

Serial No. _____

This manual identifies potential hazards and has special safety messages that help you and others avoid personal injury and even death. ***Danger***, ***Warning***, and ***Caution*** are signal words used to identify the level of hazard. However, regardless of the hazard, be extremely careful.

Danger signals an extreme hazard that *will* cause serious injury or death if you do not follow the recommended precautions.

Warning signals a hazard that *may* cause serious injury or death if you do not follow the recommended precautions.

Caution signals a hazard that may cause minor or moderate injury if you do not follow the recommended precautions.

© 2001 by The Toro Company
8111 Lyndale Avenue South
Bloomington, MN 55420-1196

All Rights Reserved

Printed in the USA

This manual uses 2 other words to highlight information. **Important** calls attention to special mechanical information and **Note:** emphasizes general information worthy of special attention.

Safety

Models 38537 and 38538 meet or exceed the ISO standard 8437 in effect at the time of production.

To ensure maximum safety and best performance, and to gain knowledge of the product, it is essential that you and any other operator of the snowthrower read and understand the contents of this manual before the engine is ever started.

⚠ This is the safety alert symbol. It is used to alert you to potential personal injury hazards. Obey all safety messages that follow this symbol to avoid possible injury or death.

Improperly using or maintaining this snowthrower could result in injury or death. To reduce this potential, comply with the following safety instructions.

Safe Operating Practices

The following instructions have been adapted from the ANSI/OPEI B71.3–1995 standard and the ISO 8437:1989 standard.

Training

- Read the operator's manual carefully. Be thoroughly familiar with the controls and the proper use of the equipment. Know how to stop the unit and disengage the controls quickly.
- Never allow children to operate the snowthrower. Never allow adults to operate the snowthrower without proper instruction.
- Keep the area of operation clear of all persons (particularly small children) and pets.
- Exercise caution to avoid slipping or falling.

Preparation

- Thoroughly inspect the area where you will use the snowthrower. Remove all doormats, sleds, boards, wires, and other foreign objects.
- Release the control bar to disengage the rotor blades before starting the engine.
- Do not operate the snowthrower without wearing adequate winter garments. Wear footwear that will improve your footing on slippery surfaces.
- Handle fuel with care; it is highly flammable.
  - Use an approved fuel container.
  - Never add fuel to a running or hot engine.
  - Fill the fuel tank outdoors with extreme care. Never fill the fuel tank indoors.
  - Replace the fuel tank cap securely and wipe up any spilled fuel.
- Use only the power cord supplied with the snowthrower and a receptacle appropriate for use with the power cord for electric-start motors.
- Never attempt to make any adjustments while the engine is running, except where specifically recommended by Toro.
- Let the engine and the snowthrower adjust to the outdoor temperature before starting to clear snow.
- Operating any powered machine can result in foreign objects being thrown into the eyes. Always wear safety glasses or eye shields while operating, adjusting, or repairing the snowthrower.

Operation

- Do not put hands or feet near or under rotating parts. Keep clear of the discharge opening at all times.
- Exercise extreme caution when crossing gravel drives, walks, or roads. Stay alert for hidden hazards or traffic.
- Do not attempt to clear snow from a crushed-rock or gravel surface. This product is intended for use only on paved surfaces.
- After striking a foreign object, stop the engine, remove the ignition key, thoroughly inspect the snowthrower for any damage, and repair the damage before operating the snowthrower.
- If the unit should start to vibrate abnormally, stop the engine and check immediately for the cause. Vibration is generally a warning of trouble.
- Stop the engine whenever you leave the operating position, before unclogging the discharge chute, and when making any repairs, adjustments, or inspections.
- When cleaning, repairing, or inspecting, make certain that the rotor blades and all moving parts have stopped.
- Do not run the engine indoors, except when starting it and for moving the snowthrower in or out of the building. Open the outside doors; exhaust fumes are dangerous.
- Do not clear snow across the face of slopes. Exercise extreme caution when changing direction on slopes. Do not attempt to clear steep slopes.

- Never operate the snowthrower without proper guards, plates, or other safety protective devices in place.
- Never operate the snowthrower near glass enclosures, automobiles, window wells, and drop-offs without properly adjusting the snow discharge angle. Keep children and pets away.
- Do not overload the machine capacity by attempting to clear snow at too fast a rate.
- Look behind and use care when backing up with the snowthrower.
- Never direct the discharge at bystanders or allow anyone in front of the unit.
- Never operate the snowthrower without good visibility or light. Always be sure of your footing, and keep a firm hold on the handle. Walk; never run.

Maintenance and Storage

- Check all fasteners at frequent intervals for proper tightness to be sure that the equipment is in safe working condition.
- Never store the machine with fuel in the fuel tank inside a building where ignition sources are present, such as hot water and space heaters and clothes dryers. Allow the engine to cool before storing in any enclosure.
- Always refer to this operator's manual for important details if the snowthrower is to be stored for an extended period.
- Maintain or replace safety and instruction labels when necessary.

Toro Snowthrower Safety

The following list contains safety information specific to Toro products or other safety information that you must know.

- *Rotating rotor blades can injure fingers or hands.* Stay behind the handles and away from the discharge opening while operating the snowthrower. *Keep your face, hands, feet, and any other part of your body or clothing away from moving or rotating parts.*
- Before adjusting, cleaning, repairing, and inspecting the snowthrower, and before unclogging the discharge chute, *stop the engine, remove the key, and wait for all moving parts to stop*.
- Use a stick, *not your hands*, to remove obstructions from the discharge chute.
- *Before* leaving the operating position, stop the engine, remove the key, and wait for all moving parts to stop.
- Do not wear loose-fitting clothing that could get caught in moving parts.
- If a shield, safety device, or decal is damaged, illegible, or lost, repair or replace it before beginning operation. Also, tighten any loose fasteners.
- *Do not* smoke while handling gasoline.
- *Do not* use the snowthrower on a roof.
- Do not touch the engine while it is running or soon after it has stopped because the engine may be hot enough to cause a burn.
- Perform only those maintenance instructions described in this manual. Before performing any maintenance, service, or adjustment, stop the engine and remove the key. If major repairs are ever needed, contact your Authorized Service Dealer.
- Do not change the governor settings on the engine.
- When storing the snowthrower for more than 30 days, drain the fuel from the fuel tank to prevent a potential hazard. Store fuel in an approved fuel container. Remove the key from the ignition switch before storing the snowthrower.
- To ensure the best performance and safety, purchase only genuine Toro replacement parts and accessories.

Sound Pressure Level

This unit has a sound pressure at the operator's ear of 91 dB(A), based on measurements of identical machines per Directive 84/538/EEC.

Sound Power Level

This unit has a sound power level of 104 LwA, based on measurements of identical machines per Directive 84/538/EEC.

Vibration Level

This unit has a maximum hand-arm vibration level of 15.5 m/s^2, based on measurements of identical machines per EN 1033.

Safety and Instruction Decals

Safety decals and instructions are easily visible to the operator and are located near any area of potential danger. Replace any decal that is damaged or lost.

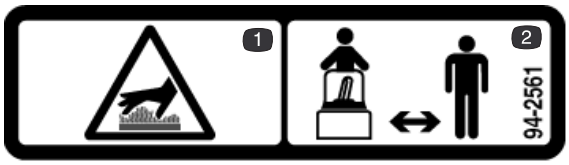

94-2561

1. Hot surface; do not touch
2. Stay a safe distance from the machine

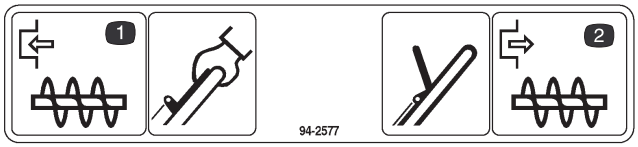

94-2577

1. Squeeze the control bar to engage the rotor blades
2. Release the control bar to release the rotor blades

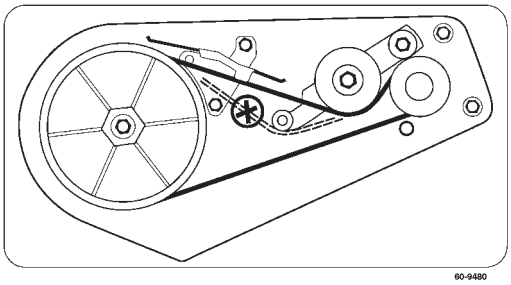

60-9480

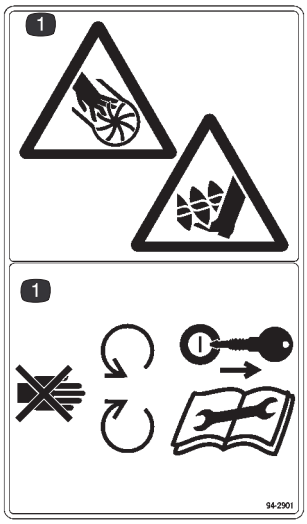

94-2901

1. Cutting/dismemberment in impeller hazard—stay away from moving parts, stop the engine, and remove the key before performing maintenance



104-9742

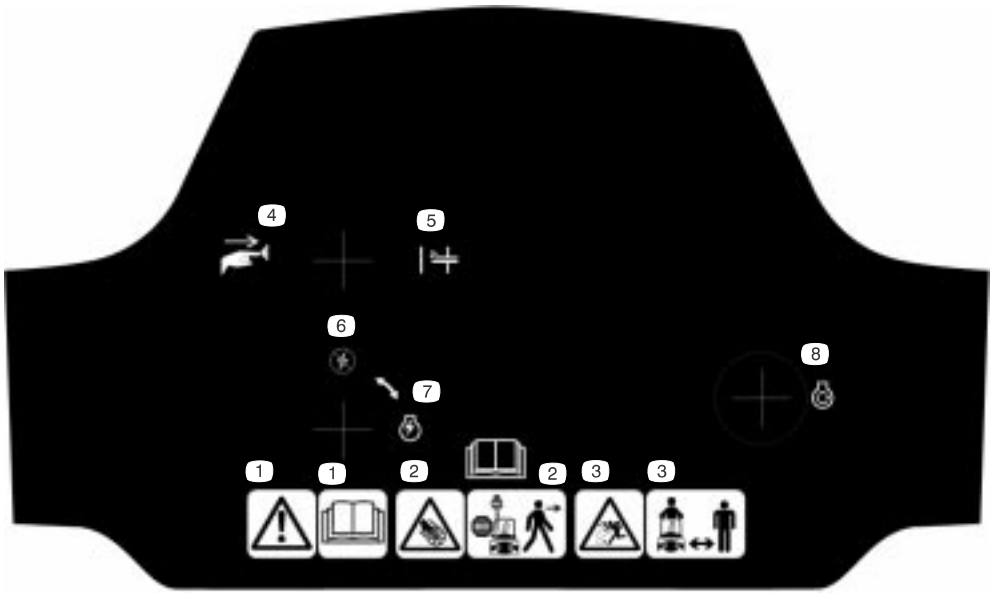

105-3522 (Model 38535) or 105-1963 (Model 38537)

1. Warning—read the *Operator's Manual*
2. Stay away from moving parts, and stop the engine before leaving the machine
3. Thrown object hazard—keep bystanders away
4. Push the button
5. Primer
6. Ignition off
7. Ignition on
8. Recoil starter



105-3524 (Model 38536) or 105-1962 (Model 38538)

1. Warning—read the *Operator's Manual*
2. Stay away from moving parts, and stop the engine before leaving the machine
3. Thrown object hazard—keep bystanders away
4. Push the button
5. Primer
6. Ignition off
7. Ignition on
8. Electric starter
9. Recoil starter

Assembly

Note: Determine the left and right sides of the machine from the normal operating position.

Loose Parts

DESCRIPTION	QTY.	USE
Short spacer (right side)	1	Installing the wheels
Long spacer (left side)	1	
Pushnuts	2	
Wheels	2	
Upper handle section	1	Installing the handle
Knobs	2	
Curved washers	2	
Handle locks	2	
Screws	3	Installing the discharge chute
Locknuts	3	
Washers	3	
Discharge chute	1	
Chute handle (Models 38535 and 38536 only)	1	
Bolts	2	Installing the chute crank (Models 38537 and 38538 only)
Locknuts	2	
Chute crank and mounting bracket	1	
Ignition key	1	Starting and stopping the engine

Installing the Wheels

1. Turn the snowthrower onto its left side and place a wood block under the left axle end (Fig. 2).

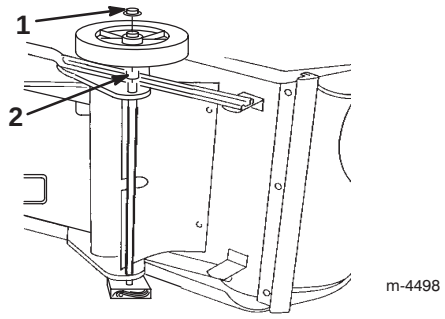

Figure 2

1. Pushnut
2. Short spacer

2. Slide the *short* spacer and a wheel onto the right axle end (Fig. 2).

Note: The side of the wheel with 6 spokes must face downward.

3. Slide a pushnut onto the end of the axle (Fig. 2).

4. Strike the pushnut with a hammer to seat it *firmly* in place.

5. Turn the snowthrower over onto its right side and place a wood block under the right axle end.

6. Slide the *long* spacer and a wheel onto the left axle end (Fig. 3).

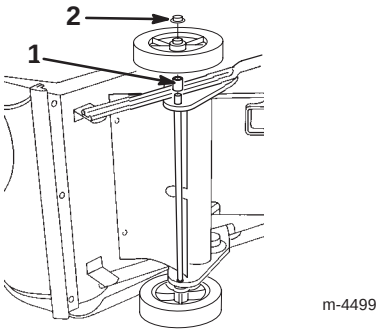

Figure 3

1. Long spacer
2. Pushnut

Note: The side of the wheel with 6 spokes must face downward.

7. Repeat steps 3 and 4.

Installing the Handle

1. Cut the plastic tie that secures the control cable to the handle (Fig. 4).

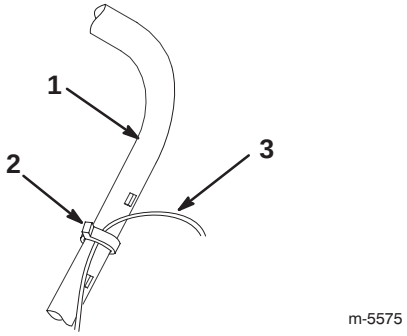

Figure 4

1. Handle
2. Plastic tie
3. Control cable

Important If you do not cut the plastic tie, the rotor brake will not function properly.

2. Position the upper handle as shown in Figure 5.

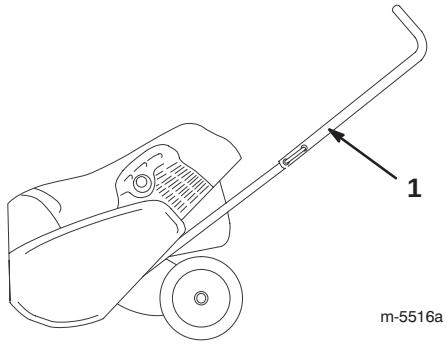

Figure 5

1. Upper handle

3. Loosely install the handle locks, curved washers, and knobs as shown in Figure 6.

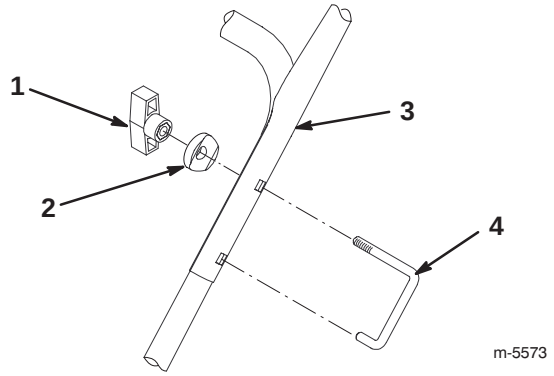

Figure 6

1. Knob (2)
2. Curved washer (2)
3. Upper handle
4. Handle lock (2)

4. Insert the loose end of the control cable into the bottom hole in the control bar. Refer to Fig. 7 (Models 38535 and 38536) or Fig. 8 (Models 38537 and 38538).

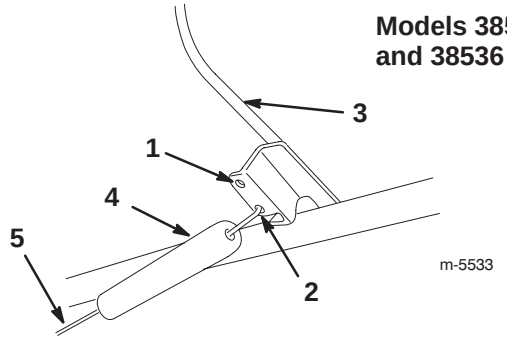

Figure 7

1. Top hole
2. Bottom hole
3. Control bar
4. Spring cover
5. Control cable

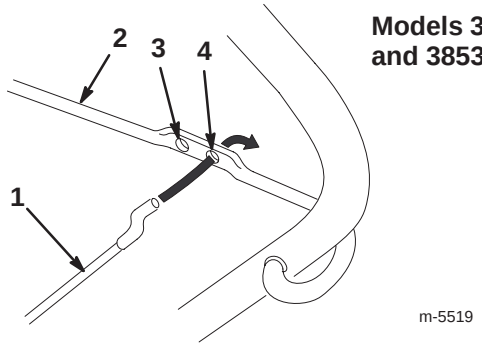

Figure 8

1. Cable
2. Control bar
3. Top hole
4. Bottom hole

5. Fully insert the handle locks (Fig. 6).

Important Ensure that the control cable is not pinched by the upper handle or the handle lock.

6. Tighten the knobs until they are snug.

7. Adjust the control cable. Refer to Adjusting the Control Cable on page 16.

Installing the Discharge Chute

Models 38535 and 38536

1. Place the discharge chute over the chute ring, and align the hole in the back of the discharge chute with the center hole in the chute ring (Fig. 9).

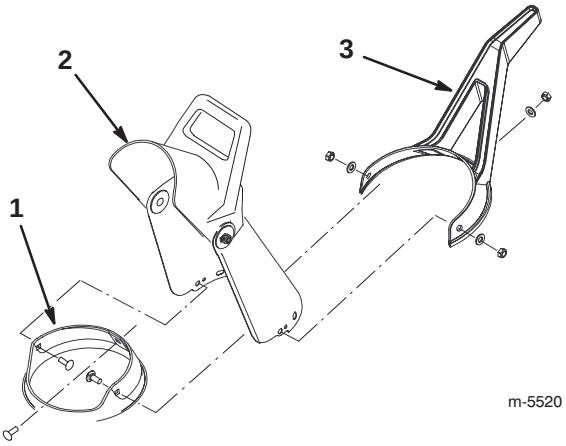

Figure 9

1. Chute ring
2. Discharge chute
3. Chute handle

2. Insert a screw through the center hole of the chute ring from the inside and through the hole in the discharge chute (Fig. 9).

3. Insert the chute handle over the discharge chute, and fully insert the screw through the center hole in the chute handle (Fig. 9).

4. Install a washer and a locknut on the screw, and tighten the locknut until it is finger tight.

5. Align the remaining holes of the chute handle, the discharge chute, and the chute ring, and insert the 2 remaining screws through the holes from the inside of the chute ring.

6. Install the washers and the locknuts on the screws, and tighten the locknuts until they are finger tight.

7. Tighten all locknuts *securely.*

Models 38537 and 38538

1. Place the discharge chute over the chute ring, and align the hole in the back of the discharge chute with the center hole in the chute ring (Fig. 10).

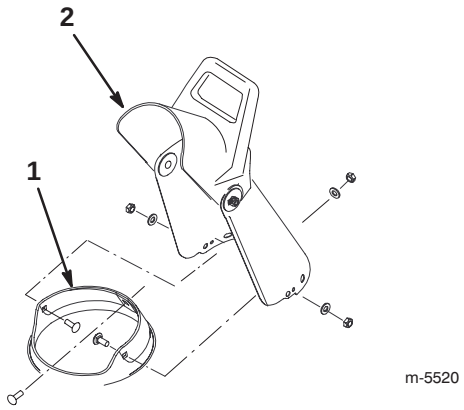

Figure 10

1. Chute ring
2. Discharge chute

2. Insert a screw through the center hole of the chute ring from the inside and through the hole in the discharge chute (Fig. 10).

3. Install a washer and a locknut on the screw, and tighten the locknut until it is finger tight.

4. Align the remaining holes of the discharge chute and the chute ring, and insert the 2 remaining screws through the holes from the inside of the chute ring.

5. Install the washers and the locknuts on the screws, and tighten the locknuts until they are finger tight.

6. Tighten all locknuts *securely.*

Installing the Chute Crank

Models 38537 and 38538

1. Insert the flattened end of the chute crank through the hole in the shroud while aligning the mounting bracket with the holes in the lower handle (Fig. 11).

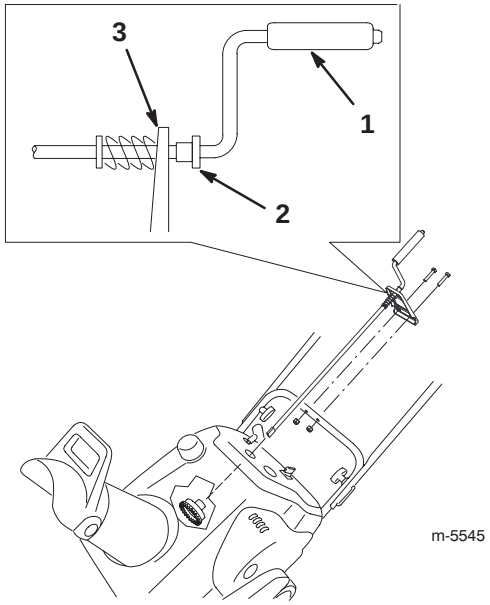

Figure 11

1. Chute crank
2. Plastic bushing
3. Mounting bracket

2. Slowly rotate the crank until the flattened end fits into the hidden gear opening and the chute ring turns with the crank (Fig. 11).

3. Ensure that the plastic bushing is fully inserted into the hole in the mounting bracket. If not, slide it along the crank and into the hole (Fig. 11).

4. Secure the mounting bracket to the handle with 2 bolts and locknuts (Fig. 11).

Before Starting

Mixing Gasoline and Oil

Your Toro snowthrower is powered by a 2-cycle engine that requires a 50:1 gasoline-to-oil mixture.

Use only clean, unleaded gasoline no more than 30 days old and with an octane rating of 87 or higher. Using unleaded gasoline reduces combustion chamber deposits and promotes longer spark plug life.

Engines certified to comply with U.S. EPA emission regulations for ULGE engines are certified to operate on a mixture of regular unleaded gasoline and oil, include the following emission control system(s): EM and TWC (if equipped), and do not include any user-adjustable features.

Important *Do not* use methanol, gasoline containing methanol, gasohol containing more than 10% ethanol, premium gasoline, or white gas. Using these fuels can damage the fuel system.

Important *Do not* use an automotive oil (such as SAE 30 or 10W30), a 2-cycle oil that is not NMMA TCW-certified, or a fuel mixed at the wrong gasoline-to-oil ratio. This can cause engine damage not covered under the Toro warranty.

Danger

In certain conditions, gasoline is extremely flammable and highly explosive. A fire or explosion from gasoline can burn you and others and can damage property.

- **Fill the fuel tank outdoors, in an open area, and when the engine is cold. Wipe up any gasoline that spills.**
- **Do not fill the fuel tank completely full. Add gasoline to the fuel tank until the level is 1/4 to 1/2 in. (6 to 13 mm) below the bottom of the filler neck. This empty space in the tank allows the gasoline to expand.**
- **Never smoke when handling gasoline, and stay away from an open flame or where a spark may ignite the gasoline fumes.**
- **Store gasoline in an approved fuel container and keep it out of the reach of children.**
- **Never buy more than a 30-day supply of gasoline.**

Danger

When fueling, under certain circumstances, a static charge can develop, igniting the gasoline. A fire or explosion from gasoline can burn you and others and damage property.

- **Always place gasoline containers on the ground and away from your vehicle before filling.**
- **Do not fill gasoline containers inside a vehicle or on a truck or trailer bed because interior carpets or plastic truck bed liners may insulate the container and slow the loss of any static charge.**
- **When practical, remove gasoline-powered equipment from the truck or trailer and refuel the equipment with its wheels on the ground.**
- **If this is not possible, then refuel such equipment on a truck or trailer from a portable container, not from a gasoline dispenser nozzle.**
- **If you must use a gasoline dispenser nozzle, keep the nozzle in contact with the rim of the fuel tank or container opening at all times until fueling is complete.**

Note: Use a fuel stabilizer/conditioner for all Toro gasoline-powered products during operation and storage. A fuel stabilizer/conditioner cleans the engine during operation and prevents gum-like varnish deposits from forming in the engine during storage. A fuel stabilizer/conditioner works best when you mix it with fresh gasoline. If you use *Toro 50:1 2-Cycle Oil (Fuel Stabilizer Added)*, you do not need to add a fuel stabilizer/conditioner.

Important Do not use fuel additives except a fuel stabilizer during storage. Do not use fuel stabilizers with an alcohol base, such as ethanol, methanol, or isopropanol.

1. Pour a half gallon (1.9 liters) of fresh, unleaded gasoline into an approved fuel container.

Note: Do not mix gasoline and oil in the fuel tank. Oil at room temperature mixes easier and more thoroughly than cold oil. Oil below 32°F (0°C) requires additional mixing.

2. Add the full amount of *Toro 50:1 2-Cycle Oil (Fuel Stabilizer Added)* or an equivalent high grade, NMMA TCW-certified 2-cycle oil to the gasoline according to the chart below:

50:1 Gasoline-to-Oil Ratio Mixing Chart	
Gasoline	Oil
1 gallon (4 liters)	2.6 ounces (80 ml)
2 gallons (8 liters)	5.2 ounces (160 ml)
5 gallons (20 liters)	13 ounces (400 ml)

3. Install the cap on the fuel container.
4. Shake the container to mix the gasoline and oil thoroughly.
5. Slowly remove the cap and add the remaining amount of gasoline.

Filling the Fuel Tank

Important Do not overfill the fuel tank. The gasoline-and-oil mixture must have room to expand.

1. Clean around the fuel tank cap; do not allow snow or water to enter the fuel tank.
2. Remove the fuel tank cap and fill the fuel tank with the gasoline-and-oil mixture until the level is 1/4 to 1/2 in. (6 to 13 mm) below the bottom of the filler neck. *Do not fill into the filler neck.*
3. Install the fuel tank cap securely and wipe up any spilled fuel.

Operation

Note: Determine the left and right sides of the machine from the normal operating position.

Operating Controls

The snowthrower control panel contains a key switch, a primer, a recoil starter, and an electric-start button (electric-start model only). The choke lever and the cord connection (for the electric-start model) are located below the control panel as shown in Figure 12.

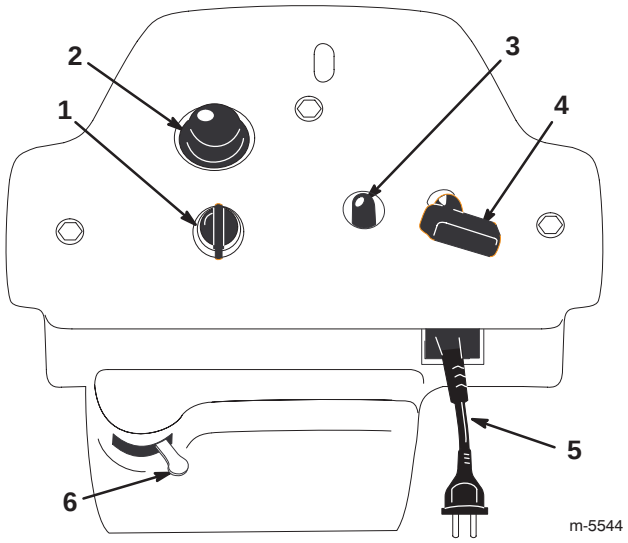

Figure 12

1. Key switch
2. Primer
3. Electric-start button (electric-start model only)
4. Recoil start
5. Cord connection (electric-start model only; below the control panel)
6. Choke lever

Starting the Engine

1. Turn the key to the *On* position.
2. Move the choke lever to the right.
3. Cover the hole in the center of the primer with your thumb and push the primer in twice, pausing a moment between pushes. In extremely cold temperatures, repeat this step if necessary.

   Note: Take off your glove when you push in the primer so that air cannot escape from the primer hole.

   Note: Do not use the choke or the primer when starting a warm engine.
4. Start the engine by doing the following:

   For a recoil starter: Hold the snowthrower handle with one hand and pull the recoil starter vigorously with the other hand.

   For an electric starter:

   A. Connect the power cord to the snowthrower and to a standard household power outlet.

Caution

If you leave the snowthrower plugged into a power outlet, someone can inadvertently start the snowthrower and injure people or damage property.

Unplug the power cord whenever you are not starting the snowthrower.

B. Push the starter button.

Note: Run the electric starter no more than 10 times at intervals of 5 seconds on, then 5 seconds off.

Important Running the electric starter extensively can overheat and damage it.

Note: If the engine does not start after this series of attempts, wait at least 40 minutes to allow the starter to cool before attempting to start it again.

Note: If the engine does not start after the second series of attempts, take the snowthrower to an Authorized Service Dealer for service.

C. When the engine starts, disconnect the power cord from the snowthrower and the outlet.

5. With the engine running, move the choke lever to the left slowly.

Stopping the Engine

Turn the key to the *Off* position and wait for all moving parts to stop before leaving the operating position.

Starting the Rotor Blades

To start the rotor blades, squeeze the control bar and the handle together.

Stopping the Rotor Blades

To stop the rotor blades, release the control bar.

Note: When you release the control bar, the rotor blades stop, but the engine continues to run.

Adjusting the Discharge Chute

Models 38535 and 38536

Move the chute handle left and right to adjust the direction of the snow stream (Fig. 13). The chute deflector handle on top of the discharge chute controls the height of the snow stream.

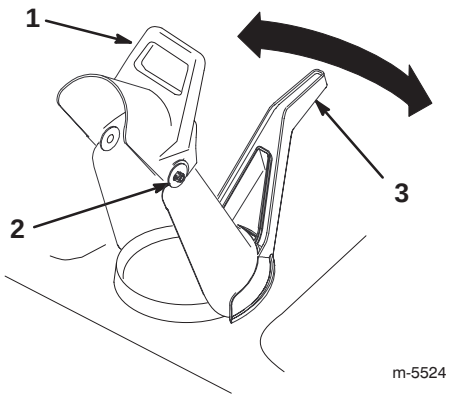

Figure 13

1. Chute deflector handle
2. Deflector mounting locknut (2)
3. Chute handle

Note: Do not overtighten the chute deflector mounting locknuts.

Important Do not use the chute handle to lift the snowthrower. This can damage the chute handle.

Models 38537 and 38538

Rotate the chute crank clockwise to move the discharge chute to the right or counterclockwise to move the chute to the left (Fig. 14). The chute deflector handle on top of the discharge chute controls the height of the snow stream.

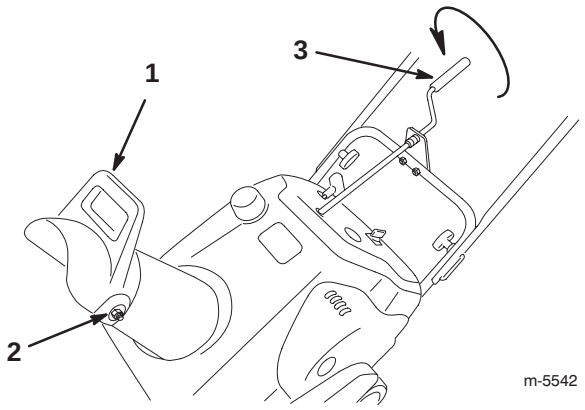

Figure 14

1. Chute deflector handle
2. Deflector mounting locknut (2)
3. Chute crank

Note: Do not overtighten the chute deflector mounting locknuts.

Snowthrowing Tips

Warning

The rotor blades can throw stones, toys and other foreign objects and cause serious personal injury to the operator or to bystanders.

- **Keep the area to be cleared free of all objects that the rotor blades could pick up and throw.**
- **Keep all children and pets away from the area of operation.**

- Remove the snow as soon as possible after it falls. This produces the best snow removal results.
- The snowthrower clears down to the ground and propels itself forward when you raise the handle. The snowthrower tilts *slightly* forward so that the rotor blades strike the ground. The wheels do not need to touch the ground to self-propel. The more you tilt the handle forward, the faster the snowthrower self-propels.
- If the snowthrower does not propel itself forward on slippery surfaces or in heavy snow, push forward on the handle, but allow the snowthrower to work at its own pace.
- Overlap each swath to ensure complete snow removal.
- Discharge the snow downwind whenever possible.
- Do not attempt to clear snow from a crushed-rock or gravel surface. This product is intended for use only on paved surfaces.
- In snowy and cold conditions, some controls and moving parts may freeze. *Do not use excessive force when trying to operate frozen controls.* If you have difficulty operating any control or part, start the engine and let it run for a few minutes.
- After clearing the snow, let the engine run for a few minutes to prevent moving parts from freezing. Shut off the engine, wait for all moving parts to stop, and remove all ice and snow from the snowthrower.
- With the engine off, pull the recoil starter handle several times to prevent the recoil starter from freezing up.
- For models with a chute crank, operate the chute crank several times to remove any ice and snow.

Maintenance

Note: Determine the left and right sides of the machine from the normal operating position.

Recommended Maintenance Schedule

Maintenance Service Interval	Maintenance Procedure
Initially	• Check the control cable both initially and after the first hour of operation; adjust it if necessary. Refer to Adjusting the Control Cable on page 16. • Check for loose fasteners and tighten them if necessary.
Annually	• Check the control cable and adjust it if necessary. Refer to Adjusting the Control Cable on page 16. • Inspect the rotor blades and replace them if necessary. Replace the scraper when you replace the rotor blades. Refer to Replacing the Rotor Blades on page 17 and to Replacing the Scraper on page 19. • Inspect the scraper and replace it if necessary. If the rotor blades are partially or completely worn, replace the rotor blades when you replace the scraper. Refer to Replacing the Scraper on page 19 and to Replacing the Rotor Blades on page 17. • Inspect the spark plug and check the gap; replace the spark plug if necessary. Refer to Replacing the Spark Plug on page 19. • Inspect the drive belt and replace it if necessary. Refer to Replacing the Drive Belt on page 20. • Store the snowthrower properly. Refer to Storage on page 21. • Check for loose fasteners and tighten them if necessary.

Caution

If you leave the wire on the spark plug, someone could start the engine accidentally and seriously injure you or other bystanders.

Disconnect the wire from the spark plug before you do any maintenance. Set the wire aside so that it does not accidentally contact the spark plug.

Adjusting the Control Cable

Check the control cable for proper adjustment initially, after the first operating hour, and then annually thereafter.

Checking the Cable

1. Stop the engine and wait for all moving parts to stop.
2. Move the control bar back toward the handle to remove the slack in the cable as shown in Figure 15 (for models 38535 and 38536) or Figure 16 (for models 38537 and 38538).

Models 38535 and 38536

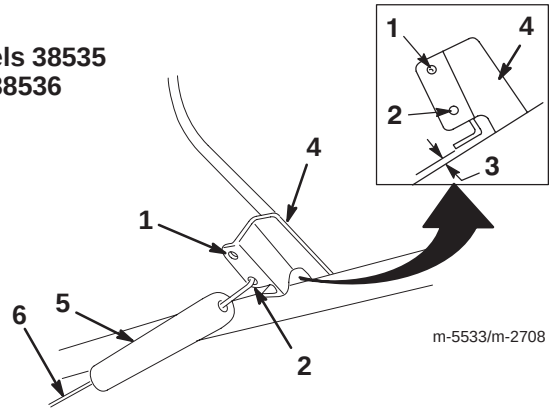

Figure 15

1. Top hole
2. Bottom hole
3. 1/16 to 1/8 in. (2 to 3 mm) gap
4. Control bar
5. Spring cover
6. Control cable

Models 38537 and 38538

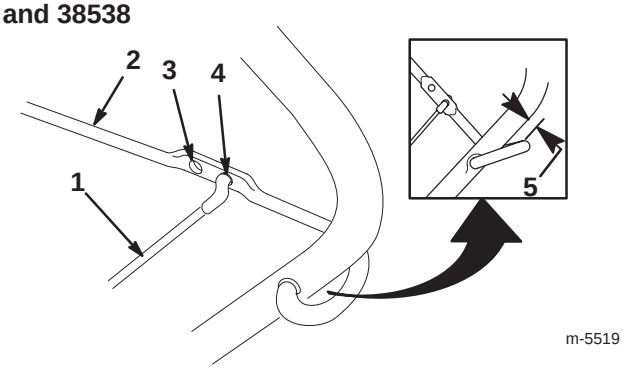

Figure 16

1. Cable
2. Control bar
3. Top hole
4. Bottom hole
5. 1/16 to 1/8 in. (2 to 3 mm) gap

3. Ensure that a 1/16 to 1/8 in. (2 to 3 mm) gap exists between the control bar and the handle. Refer to the inset in Figure 7 (models 38535 and 38536) or the inset in Figure 8 (models 38537 and 38538). To adjust the cable, go to Adjusting the Cable on page 16.

Important The control cable must contain slack when you disengage the control bar for the rotor blades to stop properly.

Adjusting the Cable

For Models 38535 and 38536 only:

1. Unhook the spring end from the control bar (Fig. 15).
2. Slide the spring cover off the spring and the cable adjuster (Fig. 17).

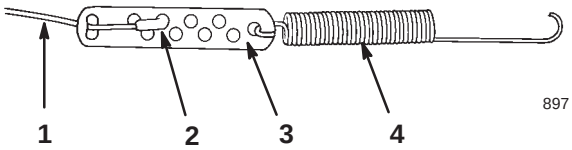

Figure 17

1. Cable
2. Z-fitting
3. Cable adjuster
4. Spring

3. Unhook the Z-fitting from the cable adjuster (Fig. 17) and position the Z-fitting in a higher or lower hole on the adjuster to obtain a proper gap of 1/16 to 1/8 in. (2 to 3 mm) between the control bar and the handle (Fig. 15).

Note: Moving the Z-fitting to a hole closer to the spring decreases the gap between the control bar and the handle; moving it to a hole farther from the spring increases the gap.

4. Slide the spring cover over the cable adjuster and the spring.
5. Hook the spring into the bottom hole of the control bar.
6. Check the adjustment (refer to steps 2 and 3 of Checking the Cable on page 16).

For Models 38537 and 38538:

1. Unhook the upper cable end from the hole in the control bar (Fig. 16).
2. Slide the spring cover up the cable to expose the cable adjuster (Fig. 18).

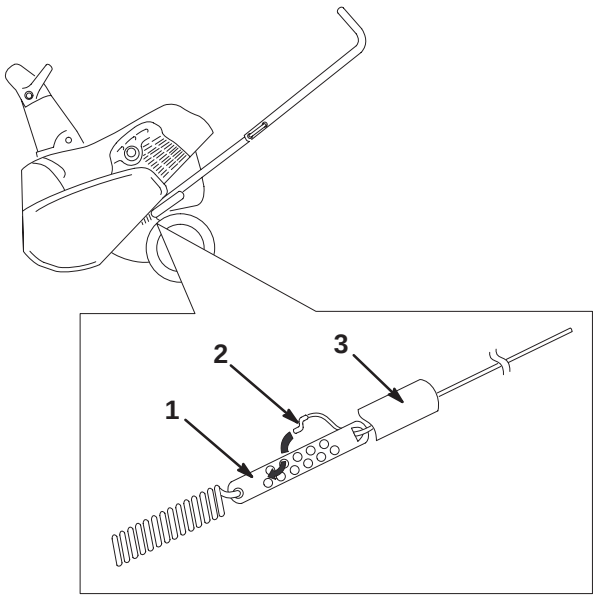

Figure 18

1. Cable adjuster
2. Z-fitting
3. Spring cover

3. Unhook the Z-fitting from the cable adjuster (Fig. 17) and position it in a higher or lower hole on the adjuster to obtain a gap of 1/16 to 1/8 in. (2 to 3 mm) between the control bar and the handle (Fig. 8).

   Note: Moving the Z-fitting to a hole closer to the spring decreases the gap between the control bar and the handle; moving it to a hole farther from the spring increases the gap.
4. Slide the spring cover over the cable adjuster.
5. Install the upper cable end into the bottom hole in the control bar.
6. Check the adjustment (refer to steps 2 and 3 of Checking the Cable on page 16).

After extended use, the drive belt may wear and lose its proper belt tension. Improper belt tension causes the belt to slip and decreases the performance under a heavy load. Belt slippage may occur after 2 or 3 seasons of normal usage (10 to 15 hours). If the drive belt slips (continuously squeals) under a heavy load, increase the belt tension by inserting the spring end into the top hole of the control bar (Fig. 15 or Fig. 16).

Note: Using the incorrect adjusting hole can reduce the drive belt life. Occasional belt slippage (squealing) may occur in extremely wet conditions due to moisture in the drive system. To remove moisture, start the rotor and operate it without a load for 30 seconds. Once you remove the moisture, the drive belt should not slip.

Replacing the Rotor Blades

Before each season, inspect the rotor blades for wear. When a rotor blade edge has worn down to the wear indicator hole (Fig. 19), replace both rotor blades to ensure proper performance and to prevent damage to the underside of the snowthrower.

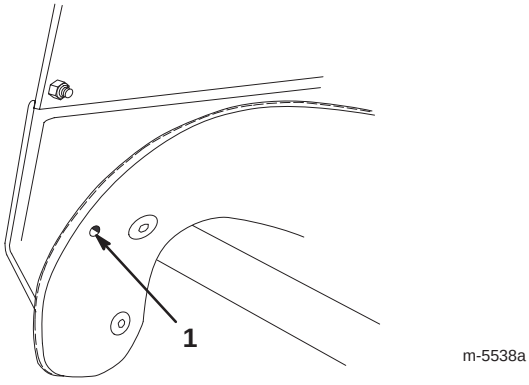

Figure 19

1. Rotor blade wear indicator hole

Important Replace the scraper whenever you replace the rotor blades. This ensures proper snowthrower operation and performance.

Note: The running time and the roughness of the driveway or the sidewalk determines the wear rate of the rotor blades.

Note: You need a No. T27 torx driver to complete this procedure.

1. Stop the engine and wait for all moving parts to stop.
2. Remove the key from the switch.
3. Remove the control panel and disconnect the wire from the spark plug. Refer to steps 3 through 5 of Replacing the Spark Plug on page 19.

Removing the Old Rotor Blades

1. Remove the 4 torx screws and the 4 locknuts that secure the outer edges of the rotor blade to the rotor assembly (Fig. 20).

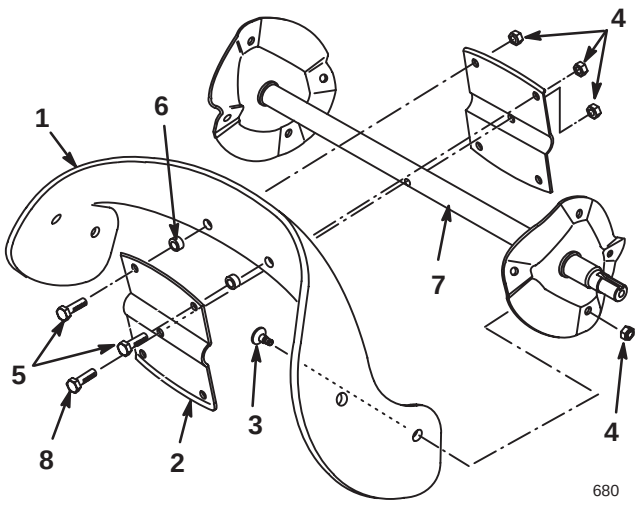

Figure 20

1. Rotor blade (2)
2. Rotor half (2)
3. Torx screw (8)
4. Locknuts (13)
5. Hex-head bolts (4)
6. Spacer (4)
7. Rotor assembly
8. Long hex-head bolt

2. Remove the 2 hex-head bolts and 2 locknuts that secure the center of the blade to the rotor halves (Fig. 20).

3. Loosen the long hex-head bolt that secures the rotor halves to the auger shaft assembly (Fig. 20).

4. Slide the rotor blade out from between the rotor halves (Fig. 20).

5. Remove the 2 spacers from the old rotor blade and install the spacers in a new rotor blade.

Installing a New Rotor Blade

1. Examine a new rotor blade edge for the difference in the thickness of the rubber layers (Fig. 21).

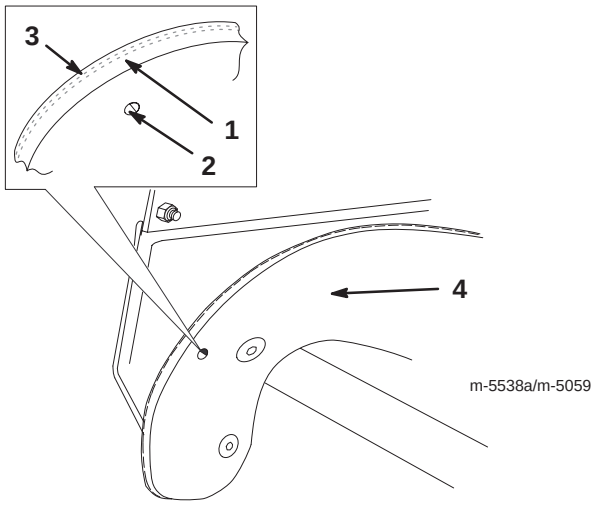

Figure 21

1. Thick rubber side
2. Wear indicator hole
3. Thin rubber side
4. Inside of curved surface

Install the new rotor blade with the thick rubber layer on the *inside* of the curved surface (Fig. 21). If you do not install the rotor blade properly, it will wear out more quickly.

2. Ensure that the spacers are in the new rotor blade, and insert the new rotor blade between the rotor halves.

3. Secure the new rotor blade to the rotor halves with the 2 hex-head bolts and 2 locknuts that you previously removed. Position the bolt heads on the thick rubber side of the rotor blade (Fig. 21).

4. Curve the new rotor blade and secure it with the torx screws and locknuts you previously removed, positioning the screw heads on the thick rubber side of the rotor blade (Fig. 21).

5. Tighten all screws and locknuts securely.

6. Replace the scraper. Refer to Replacing the Scraper on page 19.

7. Connect the wire to the spark plug.

8. Install the control panel.

9. Insert the key in the switch.

Replacing the Scraper

Note: If the rotor blades are partially or completely worn, replace the rotor blades when you replace the scraper. This ensures proper snowthrower operation and performance.

1. Stop the engine and wait for all moving parts to stop.
2. Remove the key from the switch.
3. Remove the control panel and disconnect the wire from the spark plug. Refer to steps 3 through 5 of Replacing the Spark Plug on page 19.
4. Tip the snowthrower forward onto its front housing.
5. Remove the 3 carriage bolts and the locknuts that hold the scraper in place (Fig. 22).

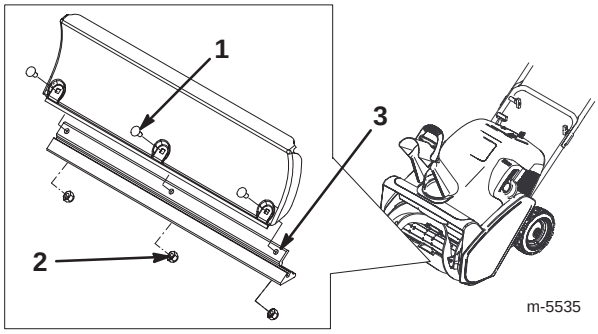

Figure 22

1. Carriage bolt (3)
2. Locknut (3)
3. Scraper

6. Remove the old scraper by sliding it to the right and down.
7. Install a new scraper to the housing using the bolts and the locknuts you previously removed.
8. Connect the wire to the spark plug.
9. Install the control panel.
10. Insert the key in the switch.

Replacing the Spark Plug

Use a *NGK BPMR4A* or equivalent spark plug. Install a new spark plug before each season.

1. Stop the engine and wait for all moving parts to stop.
2. Remove the key from the switch.
3. Remove the 3 mounting screws that secure the control panel to the housing (Fig. 23).

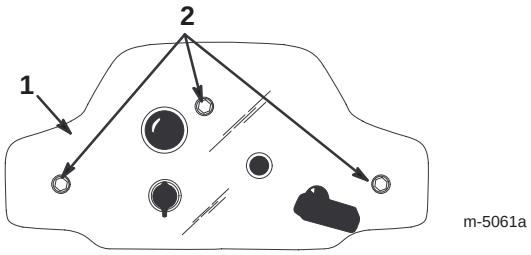

Figure 23

1. Control panel
2. Mounting screws (3)

4. Lift off the panel, allowing it to hang on the recoil rope.
5. Lift up the shroud and disconnect the wire from the spark plug (Fig. 24).

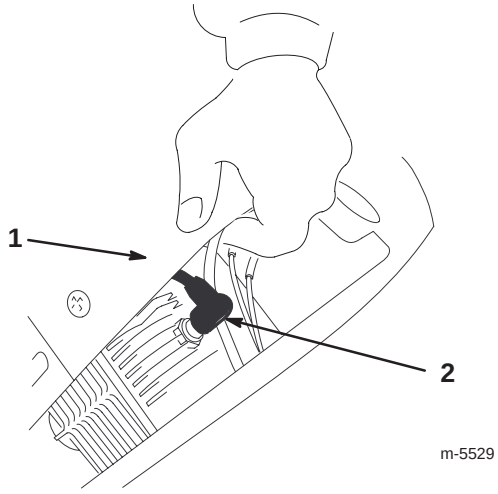

Figure 24

1. Shroud
2. Spark-plug wire

6. Clean any debris from around the base of the spark plug.
7. Remove the spark plug.
8. Examine the spark plug and replace it if it is cracked, fouled, dirty, or if the electrodes are worn.

Important Do not clean the electrodes because grit could enter the cylinder and damage the engine.

9. Set the gap between the electrodes on the spark plug at 0.030 in. (0.76 mm) as shown in Figure 25.

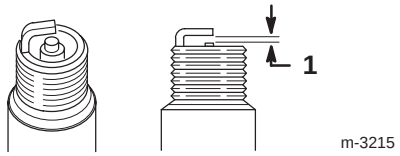

Figure 25

1. 0.030 in. (0.76 mm)

10. Install the spark plug by hand and then torque it to 15 ft-lb (20.4 N·m). If you do not have a torque wrench, tighten the plug firmly.

11. Connect the wire to the spark plug.

12. Install the control panel.

13. Insert the key in the switch.

Replacing the Drive Belt

Inspect the drive belt before each season, and replace it if it is worn or damaged.

1. Stop the engine and wait for all moving parts to stop.

2. Remove the key from the switch.

3. Disconnect the wire from the spark plug. Refer to steps 3 through 5 of Replacing the Spark Plug on page 19.

4. Remove the fasteners that secure the drive belt cover to the snowthrower frame (Fig. 26). Set the drive belt cover aside.

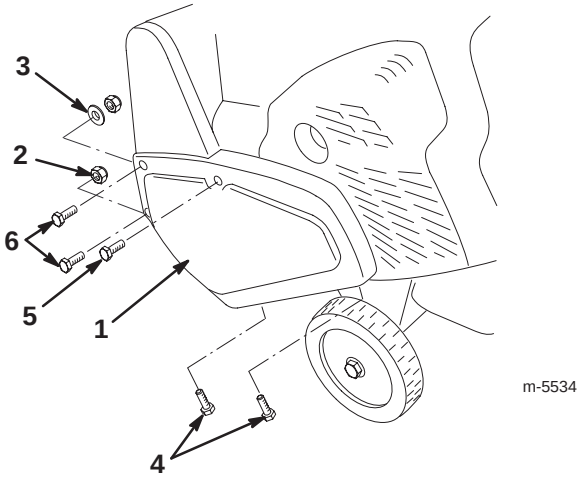

Figure 26

1. Drive belt cover
2. Nut (2)
3. Washer
4. Short self-tapping screw (2)
5. Long self-tapping screw
6. Bolt (2)

5. Pull up on the idler pulley and remove the old drive belt from the rotor pulley, the brake arm assembly, and the engine pulley (Fig. 27).

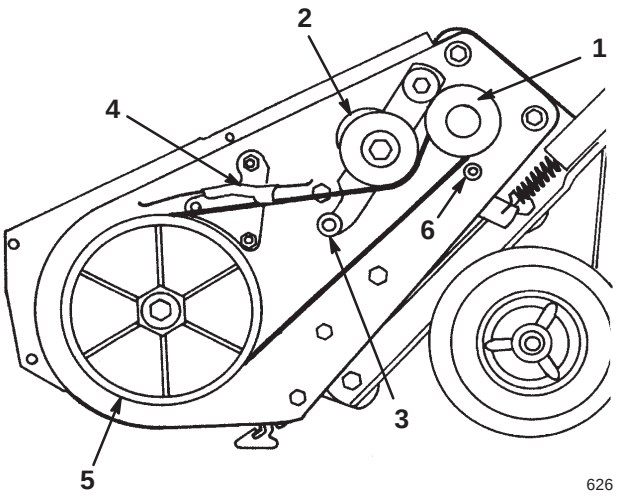

Figure 27

1. Engine pulley
2. Idler pulley
3. Roller
4. Brake arm assembly
5. Rotor pulley
6. Belt guide

6. Loop the new drive belt around the engine pulley, under the idler pulley, over the roller, through the brake assembly, and around the rotor pulley (Fig. 27).

Important The drive belt must be on top of the roller as shown in Figure 27.

7. Install the drive belt cover. Tighten the fasteners securely, but *do not overtighten*.

8. Connect the wire to the spark plug.

9. Install the control panel.

10. Insert the key in the switch.

Emptying the Fuel Tank

1. Stop the engine and wait for all moving parts to stop.

2. Remove the key from the switch.

Danger

Gasoline is highly flammable; it can ignite and cause serious personal injury.

- **Drain gasoline outdoors.**
- **Drain gasoline from a cold engine only.**
- **Wipe up any gasoline that may have spilled.**
- **Do not drain gasoline near any open flame or where gasoline fumes may be ignited by a spark.**
- ***Do not smoke* a cigar, a cigarette, or a pipe when handling gasoline.**

3. Remove the fuel tank cap and use a hand pump to pump the fuel into an approved fuel container.
4. Start the engine and allow it to run until it stops. Repeat this step 2 more times to ensure that the fuel tank and the carburetor are empty.

Storage

Important Store the snowthrower in its operating position and on its wheels. Storing the snowthrower on its front housing may cause hard starting.

Warning

Gasoline fumes are highly flammable, explosive, and dangerous if inhaled. If you store the product in an area with an open flame, the gasoline fumes may ignite and cause an explosion.

Do not store the snowthrower in a house (living area), basement, or any other area where ignition sources may be present, such as hot water and space heaters, clothes dryers, furnaces, and other like appliances.

Preparing the Fuel System

1. Add a fuel stabilizer/conditioner to the fuel in the fuel tank as directed.

   Note: If you use *Toro 50:1 2-Cycle Oil (Fuel Stabilizer Added)*, you do not need to add a fuel stabilizer/conditioner.
2. Run the engine for 5 minutes to distribute the conditioned fuel through the fuel system.
3. Stop the engine and allow it to cool.
4. Use a hand pump to pump the fuel from the fuel tank into an approved fuel container, or run the engine until it stops.
5. Start the engine and run it until it stops.
6. Choke or prime the engine, start it a third time, and run the engine until it will not start.
7. Dispose of unused fuel properly. Recycle it according to local codes, or use it in your automobile.

Note: Do not store stabilized fuel for more than 90 days.

Preparing the Engine

Follow this procedure to prevent cylinder bore corrosion by closing both the intake and exhaust ports of the engine.

1. Slowly pull the recoil starter until you feel resistance due to compression pressure, then stop.
2. Release the starter tension gradually by allowing the rope to go back slowly to prevent the engine from reversing due to compression pressure.

Preparing the Snowthrower

1. Tighten all loose screws, bolts, and locknuts. Repair or replace any damaged parts.
2. Clean the snowthrower thoroughly.
3. Cover the snowthrower and store it in a clean, dry place out of the reach of children. Allow the engine to cool before storing it in any enclosure.

Folding the Handle

You may fold the handle when you store your snowthrower.

1. Loosen the knobs and pull out the handle locks until the upper handle rotates freely (Fig. 6).
2. Position the upper handle as shown in Figure 28.

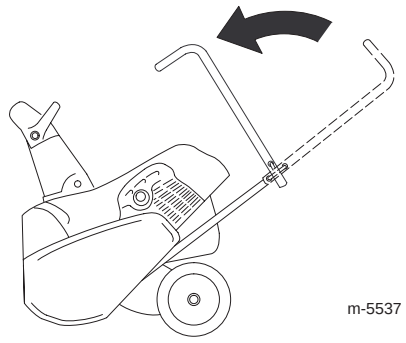

Figure 28

Note: To unfold the handle, refer to Unfolding the Handle on page 8.

Troubleshooting

Toro designed and built your snowthrower for trouble-free operation. Check the following components and items carefully, and refer to Maintenance on page 15 for more information. If a problem continues, contact an Authorized Service Dealer.

Problem	Possible Causes	Corrective Action
Electric starter does not turn (electric-start models only)	1. The power cord is disconnected at the outlet or the snowthrower.	1. Connect the power cord to the outlet and/or the snowthrower.
	2. The power cord is worn, corroded, or damaged.	2. Replace the power cord.
	3. The power outlet is not energized.	3. Have a qualified electrician energize the power outlet.
Engine does not start or starts hard	1. The key is not in the ignition or is in the *Off* position.	1. Insert the key into the ignition and turn it to the *On* position.
	2. The choke is in the *Off* position and the primer has not been pressed.	2. Move the choke to the *On* position and press the primer 2 times.
	3. The fuel tank is empty or the fuel system contains stale fuel.	3. Drain and fill the fuel tank with a fresh gasoline-and-oil mixture (not more than 30 days old). If the problem persists, contact an Authorized Service Dealer.
	4. The engine is flooded.	4. Move the choke to the *Off* position and pull the rope several times to clear out the rich fuel-and-air mixture from the engine.
	5. The spark-plug wire is loose or disconnected.	5. Connect the wire to the spark plug.
	6. The spark plug is pitted, fouled, or the gap is incorrect.	6. Check the spark plug and adjust the gap if necessary. Replace the spark plug if it is pitted, fouled, or cracked.
	7. The fuel cap vent is restricted.	7. Remove the vent restriction or replace the fuel cap.
Engine runs rough	1. The choke is in the *On* position.	1. Move the choke to the *Off* position.
	2. The fuel system contains stale fuel.	2. Drain and fill the fuel tank with a fresh gasoline-and-oil mixture (not more than 30 days old). If the problem persists, contact an Authorized Service Dealer.
	3. The spark-plug wire is loose.	3. Connect the wire to the spark plug.
	4. The spark plug is pitted, fouled, or the gap is incorrect.	4. Check the spark plug and adjust the gap if necessary. Replace the spark plug if it is pitted, fouled, or cracked.

Problem	Possible Causes	Corrective Action
Engine runs, but the snowthrower discharges snow poorly or not at all	1. You are walking too fast or too slow.	1. Change your walking speed.
	2. You are trying to remove too much snow per swath.	2. Reduce the amount of snow removed per swath.
	3. You are trying to remove extremely heavy or wet snow.	3. Don't overload the snowthrower with extremely heavy or wet snow; reduce the amount of snow removed per swath.
	4. The discharge chute is plugged.	4. Stop the engine, wait for all moving parts to stop, and use a stick to remove the snow from the discharge chute.
	5. The control cable is improperly adjusted or broken.	5. Adjust or replace the control cable.
	6. The drive belt is loose or is off the pulley.	6. Inspect the drive belt, and install or replace it.
	7. The drive belt is worn or broken.	7. Replace the drive belt.
	8. The rotor blades are worn.	8. Replace the rotor blades and the scraper.
Snowthrower does not properly clear snow off the surface	1. The snow on the surface to be cleared is compacted down.	1. Throw the snow off the surface before it becomes compacted.
	2. The front of the snowthrower is not down.	2. Lift up on the handle to hold down the front of the snowthrower.
	3. The scraper is excessively worn.	3. Replace the scraper.
	4. The rotor blades are excessively worn.	4. Replace the rotor blades and the scraper.
Snowthrower does not self-propel	1. The front of the snowthrower is not down.	1. Lift up on the handle to hold down the front of the snowthrower.
	2. The rotor blades are excessively worn.	2. Replace the rotor blades and the scraper.
	3. The snow is too deep or the surface is too slippery.	3. Push forward on the handle, but allow the snowthrower to work at its own pace.
Rotor blades do not stop properly	1. The control cable is improperly adjusted.	1. Adjust the control cable.


TORO®