Form No. 3446-752 Rev A

TORO®

Count on it.

Parts Catalog

GreensPro® 1260

Greens Roller

Model No. 44913—Serial No. 409500000 and Up

Register at www.Toro.com.
Original Instructions (EN)

CE

3446-752 A

Ordering Replacement Parts

To order replacement parts, please supply the part number, the quantity, and the description of each part desired.

Understanding Reference Numbers

Each identified part in an illustration has a reference number. The reference number for a part also appears in the parts list, along with other information about the part.

This catalog uses two special reference number formats, one to indicate parts in a service assembly and another to indicate the quantity of a given part in an illustration.

Service Assembly Reference Numbers

Parts in service assemblies have reference numbers in the form a:b. The a represents the reference number of the entire service assembly and the b represents a sequential number unique to each part within the service assembly.

For example, a wheel assembly might be identified by reference number 6, the tire by 6:1, the valve by 6:2, and the wheel by 6:3. When you order the assembly identified by reference number 6, you receive all parts identified by reference numbers 6:1,6:2, and 6:3. However, you may also order any part individually. Reference numbers of this type appear in illustration and in parts lists.

Reference Numbers Indicating Quantity

In an illustration, if a reference number indicates more than one part, the reference number has the form nX y. The n represents the quantity of the part, the X is the multiplication symbol, and the y represents the reference number.

For example, in an illustration, the reference number 2X 37 means that two of the parts identified by reference number 37 are indicated.

Contents

Steering Assembly 4
Complete Long Steering Roller Assembly No. 127-7958 6
Complete Short Steering Roller Assembly No. 127-7963 7
Oil Tank and Hose Assembly 8
Roller Drive Assembly 10
Hydraulic Motor Assembly No. 131-6431 12
Engine Assembly 14
Tire Assembly 16
Lifting Mechanism Assembly 18
Seat Assembly 20
Steering Wheel Assembly 22
Parking Brake Assembly 24
Control Assembly 26
Hydraulic Pump Assembly No. 132-4797 28
Model Specific Decal Assembly 30
Cylinder Head Assembly 32
Cylinder Barrel Assembly 34
Crankcase Cover Assembly 36
Crankshaft Assembly 38
Piston and Connecting Rod Assembly 40
Camshaft Assembly 42
Recoil Starter Assembly 44
Fan Cover Assembly 46
Carburetor Assembly 48
Air Cleaner Assembly 50
Muffler Assembly 52
Fuel Tank Assembly 54
Flywheel Assembly 56
Ignition Coil Assembly 58
Control Assembly 60
Label Assembly 62
Wrench 64
Decal Assembly 66
Gasket Kit 68
Attachments and Accessories 70

© 2021—The Toro® Company
8111 Lyndale Avenue South
Bloomington, MN 55420

Contact us at www.Toro.com.
Printed in the USA.
All Rights Reserved

Steering Assembly

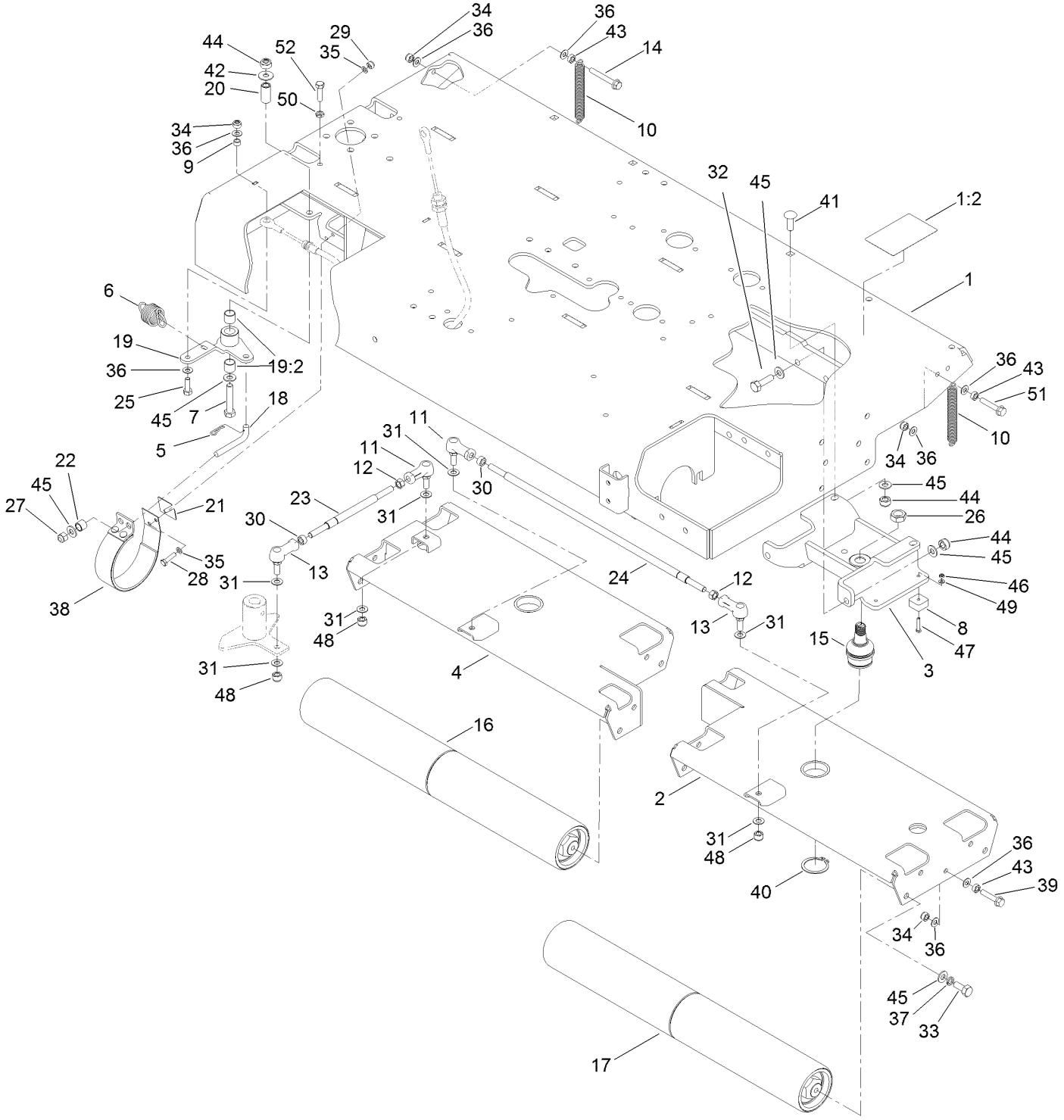

Steering Assembly (continued)

Ref.	Part Number	Qty.	Description
1	138-9104	1	Roller Chassis W/Decal
1:2	133-1701	1	Decal-Warning
2	132-4756-01	1	Head-Steering, Rear
3	132-4764-01	2	Support-Roller
4	132-7082-01	1	Head-Steering, Front
5	1-806003	1	Pin-Cotter
6	13-3090	1	Spring-Finger
7	57-6360	1	Screw-Clutch
8	94-1392	8	Pad-Rubber
9	108-7983	1	Bushing-Cable
10	136-6163	2	Spring
11	132-9263	2	Ball Joint
12	111-5855	2	Nut-Hex, LH
13	132-9264	2	Joint-Ball
14	33104-060	1	Screw-HHF
15	121-3605	2	Ball Joint
16	127-7958	2	Complete Long Steering Roller ASM
17	127-7963	2	Complete Short Steering Roller ASM
18	131-1584	1	Rod-Brake
19	136-6249	1	Brake Pivot ASM
19:2	256-311	2	Bushing-Split
20	131-6350	1	Bushing-Pivot
21	131-6353	1	Shim
22	131-6367	1	Spacer
23	132-7085	1	Rod-Pivot, Steering
24	132-7087	1	Rod-Pivot, Steering

Ref.	Part Number	Qty.	Description
25	03162	1	Screw-HH
26	3220-6	2	Nut-Jam
27	3296-39	1	Nut-Lock, NI
28	09044	2	Screw-Set
29	09201	2	Nut
30	09213	2	Nut
31	09271	8	Washer-Plain
32	09394	4	Bolt
33	09395	8	Screw-HH
34	09441	5	Nut-Hex, NI
35	09472	4	Washer-Plain
36	09475	10	Washer
37	09480	8	Washer-Lock
38	9593	1	Brake Band ASM
39	33104-040	2	Screw-HHF
40	32151-104	2	Ring-Retaining, External
41	33125-030	3	Screw-CARR
42	HY03355	1	Washer-Plated
43	ZNH1H000U	4	Nut-Hex
44	ZNN1J000U	8	Nut-Hex, NI
45	ZWQ1J000U	21	Washer-Plain
46	09746	8	Nut-Lock
47	09806	8	Setscrew
48	09216	4	Nut-Hex, NI
49	ZWP1E000U	16	Washer
50	117-4059	2	Nut-Hex
51	33104-045	1	Screw-HHF
52	09369	2	Screw-HH

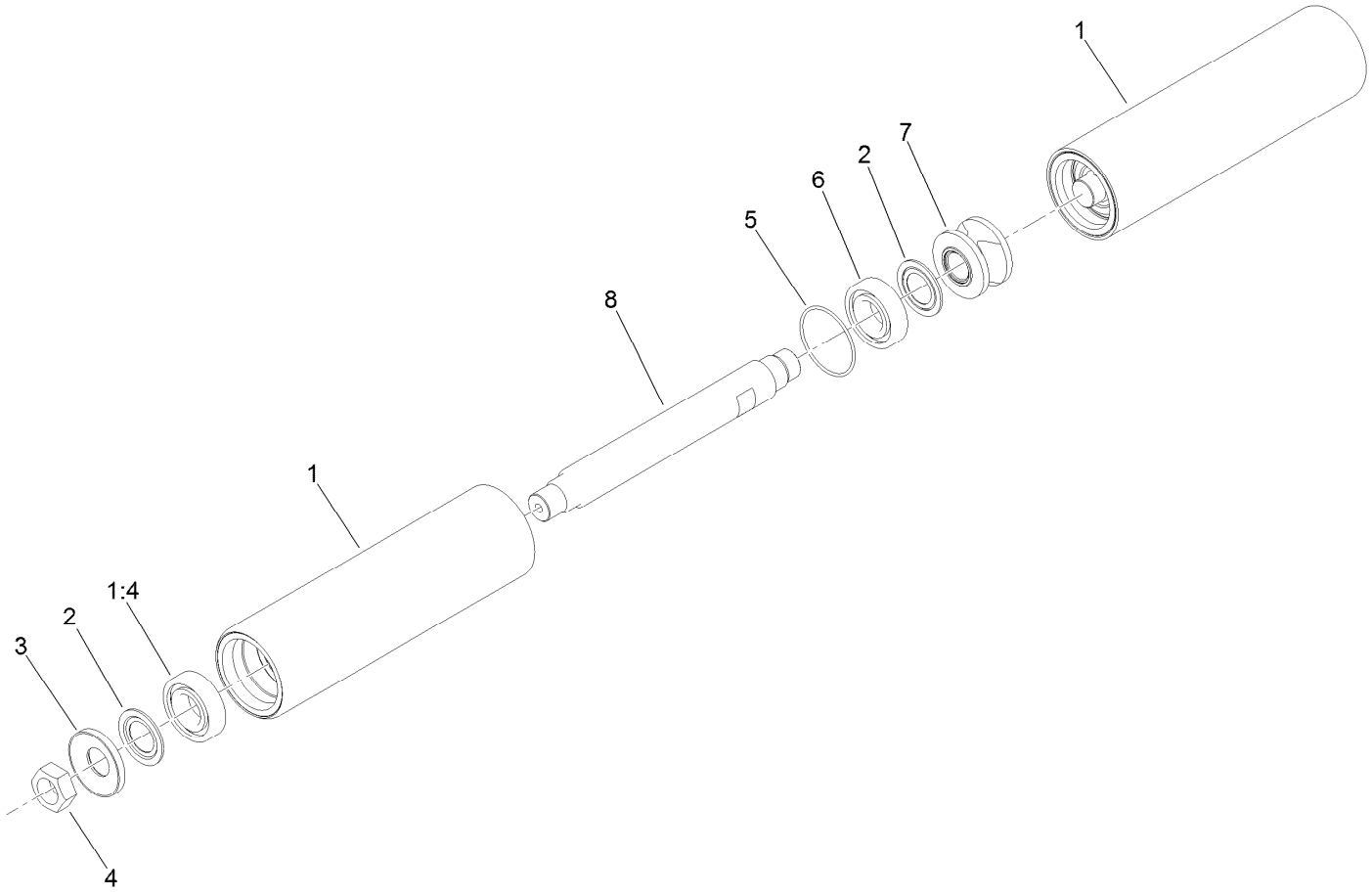

Complete Long Steering Roller Assembly No. 127-7958

Ref.	*Part Number*	*Qty.*	*Description*
1	127-7966	2	Long Steering Roller ASM
1:4	115-3296	1	Bearing-Sealed
2	115-3299	4	Seal-Flocked
3	127-7959	2	Spacer-Bearing
4	3296-49	2	Nut-Lock, NI
5	117-8177	2	O-Ring
6	115-3296	2	Bearing-Sealed
7	127-7960	1	Sleeve-Roller
8	127-8029	2	Shaft-Roller

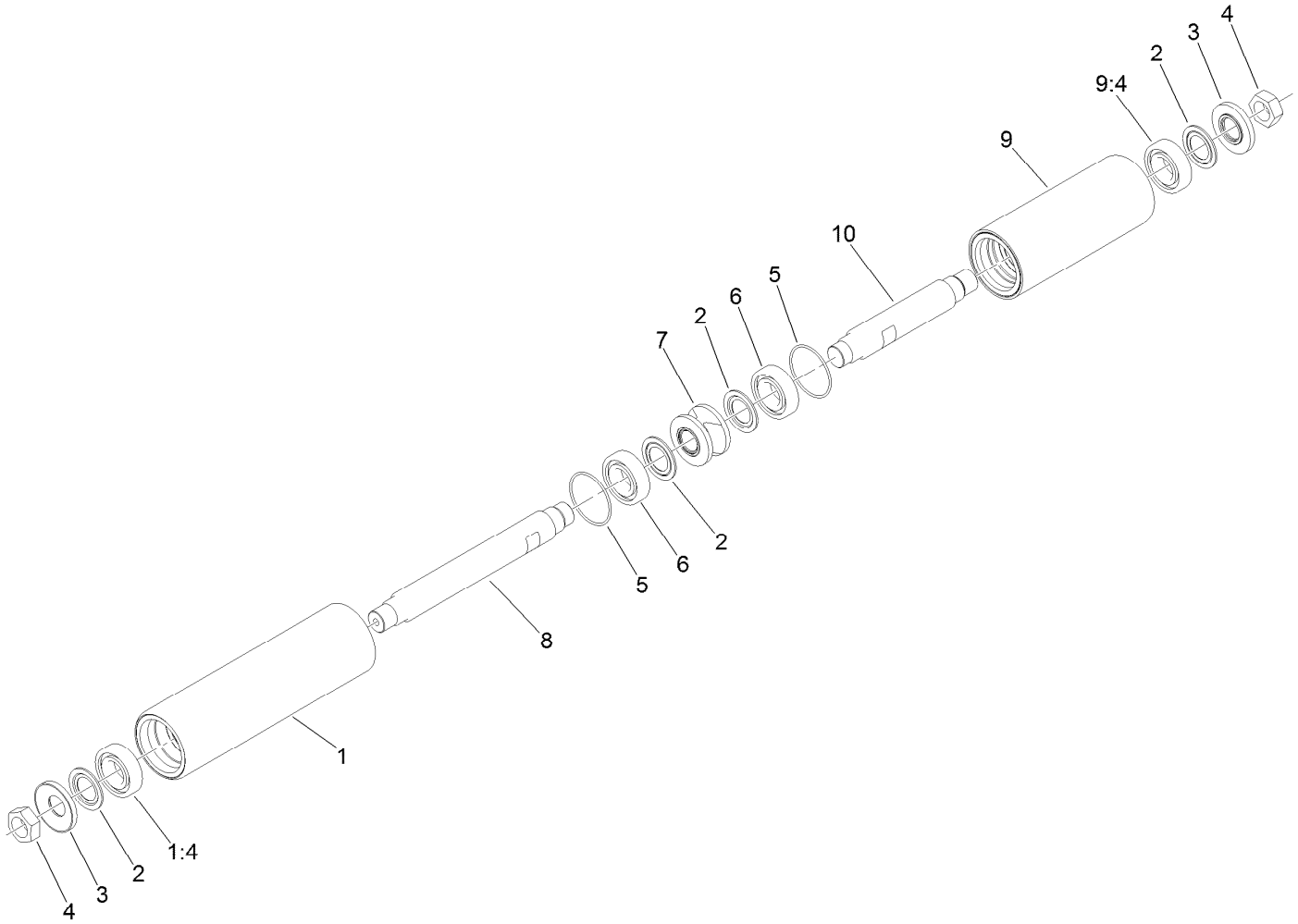

Complete Short Steering Roller Assembly No. 127-7963

Ref.	*Part Number*	*Qty.*	*Description*
1	127-7966	1	Long Steering Roller ASM
1:4	115-3296	1	Bearing-Sealed
2	115-3299	4	Seal-Flocked
3	127-7959	2	Spacer-Bearing
4	3296-49	2	Nut-Lock, NI
5	117-8177	2	O-Ring
6	115-3296	2	Bearing-Sealed
7	127-7960	1	Sleeve-Roller
8	127-8029	1	Shaft-Roller
9	127-7967	1	Short Steering Roller Assy
9:4	115-3296	1	Bearing-Sealed
10	127-8030	1	Shaft-Roller

Oil Tank and Hose Assembly

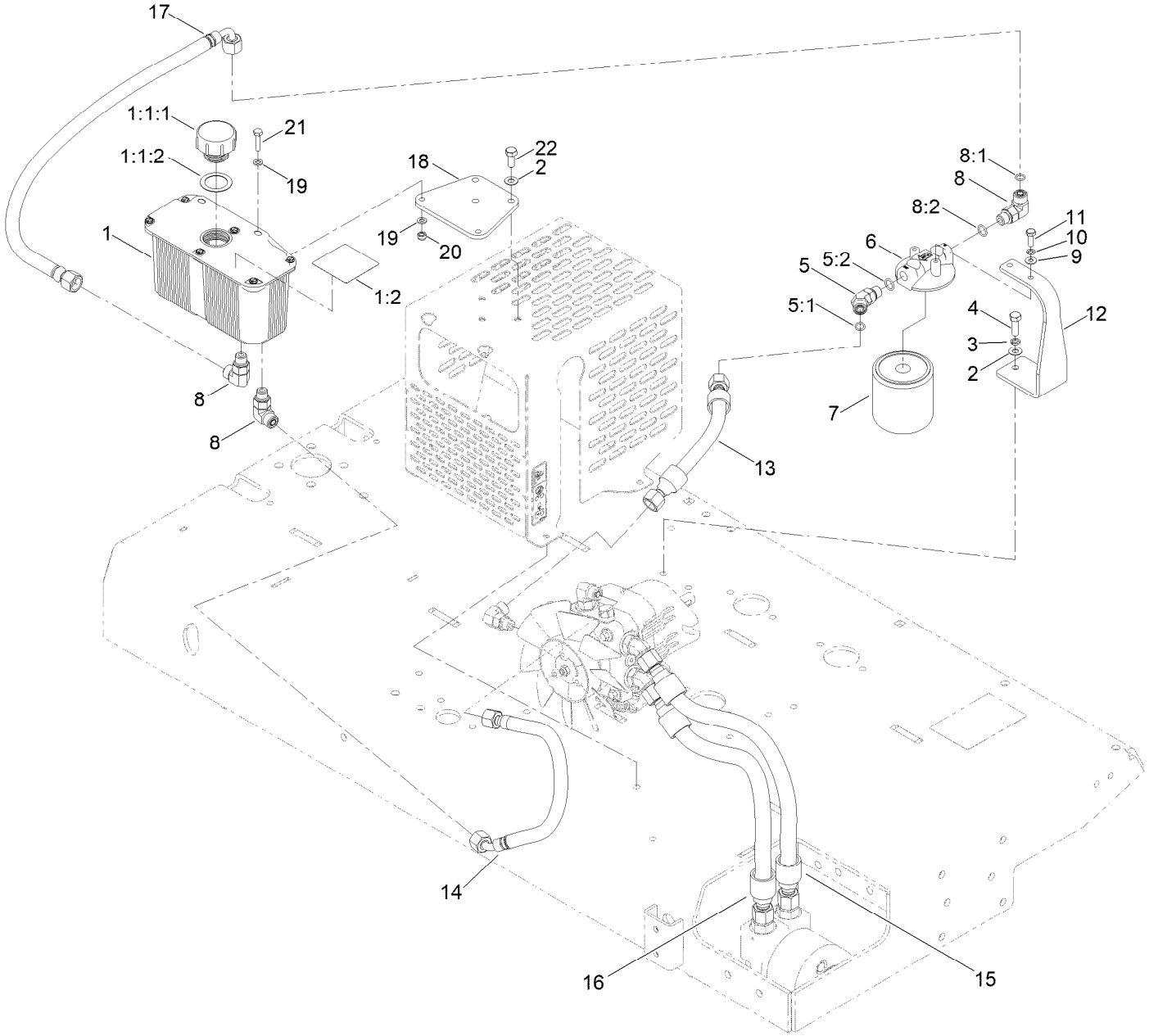

Oil Tank and Hose Assembly (continued)

Ref.	Part Number	Qty.	Description
1	107-8433	1	HYD Reservoir ASM
1:1		1	Reservoir-HYD ●■
1:1:1	103-1948	1	Cap-Reservoir, HYD
1:1:2	103-1949	1	Gasket-Cap
1:2	115-4212	1	Decal-Warning
2	09475	5	Washer
3	03469	2	Washer-Spring
4	03162	2	Screw-HH
5	340-87	1	Fitting-Elbow, 45 DEG
5:1	237-22	1	O-Ring
5:2	237-42	1	O-Ring
6	104-7836	1	Head-Filter
7	1-633750	1	Filter-Oil, HYD
8	340-77	3	Fitting-Elbow, 90 DEG
8:1	237-22	1	O-Ring
8:2	237-42	1	O-Ring
9	09261	2	Washer-Plain
10	1-805004	2	Washer-Lock
11	09821	2	Screw-HH
12	132-9201-01	1	Bracket-Filter
13	132-9205	1	Hose ASM
14	132-9206	1	Hose ASM
15	132-9202	1	Hose ASM
16	132-9203	1	Hose ASM
17	138-2242	1	Hose ASM
18	138-2238-01	1	Plate-Mount, Tank
19	09472	4	Washer-Plain
20	09438	2	Nut-Nyloc
21	33113-025	2	Screw-HH
22	09368	3	Screw-HH

● Not illustrated

■ Not serviced separately

Roller Drive Assembly

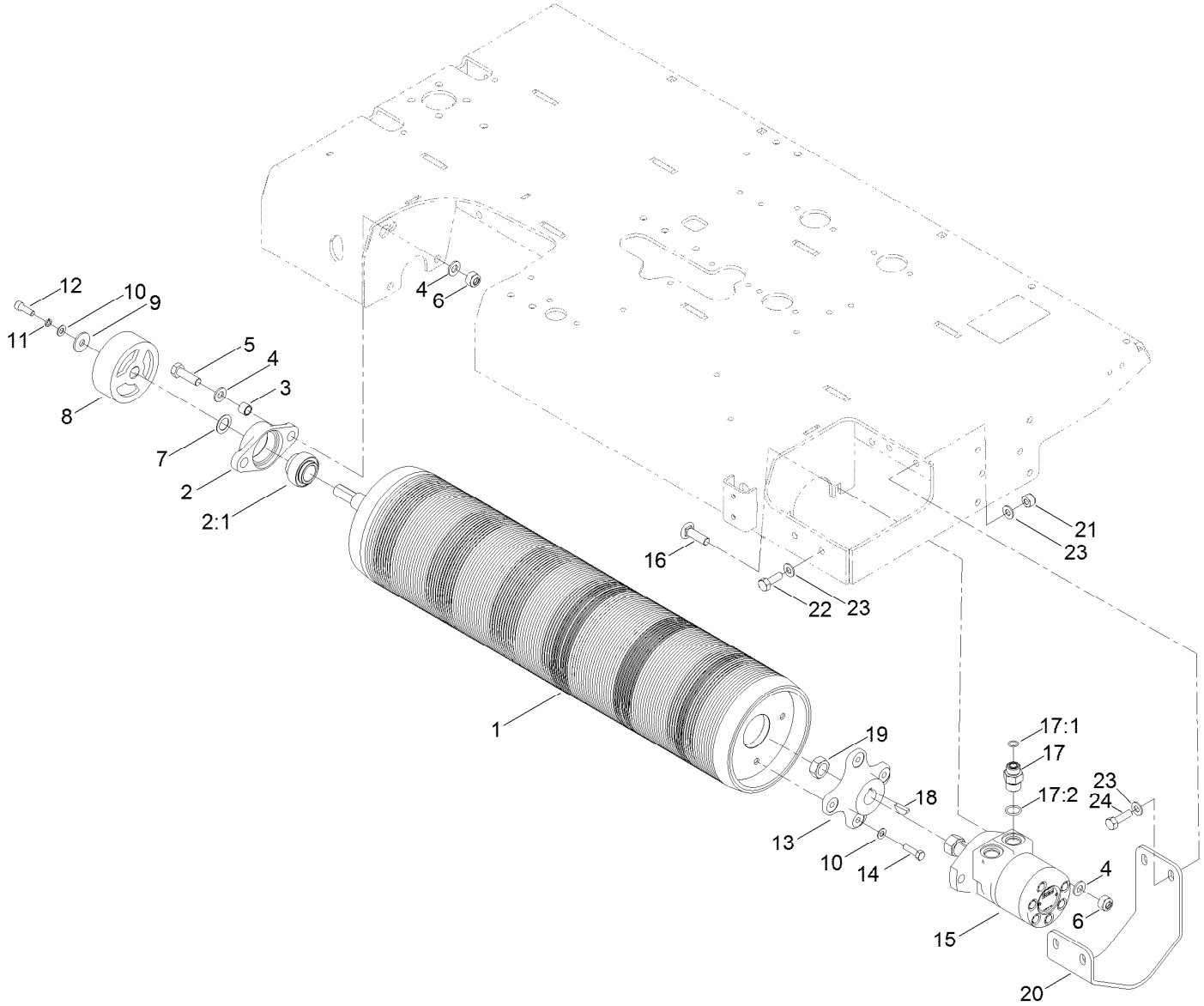

Roller Drive Assembly (continued)

Ref.	Part Number	Qty.	Description
1	132-5380	1	Drive-Drum, Roller
2	111-5744	1	Bearing ASM
2:1	111-5758	1	Bearing
3	131-6367	2	Spacer
4	HY09485	6	Washer-Plain
5	63-11-010	2	Bolt-HH
6	09650	4	Nut-Hex, Nyloc
7	132-9200	1	Spacer
8	106719	1	Drum-Brake
9	93-8806	1	Washer-Hardened
10	ZWP1H000U	5	Washer-Plain
11	03469	1	Washer-Spring
12	ZCS1H025U	1	Screw-HSH
13	133-8863	1	Hub-Drive Roller

Ref.	Part Number	Qty.	Description
14	09369	4	Screw-HH
15	131-6431	1	HYD Traction Motor ASM
16	33126-040	2	Screw-CARR
17	340-6	2	Fitting-Straight
17:1	237-30	1	O-Ring
17:2	237-80	1	O-Ring
18	3257-8	1	Key-Woodruff
19	85-7310	1	Nut-Motor, Wheel
20	132-7096-03	1	Guard-Motor
21	09447	4	Nut
22	09392	2	Screw-HH
23	ZWQ1J000U	8	Washer-Plain
24	09394	2	Bolt

Hydraulic Motor Assembly No. 131-6431

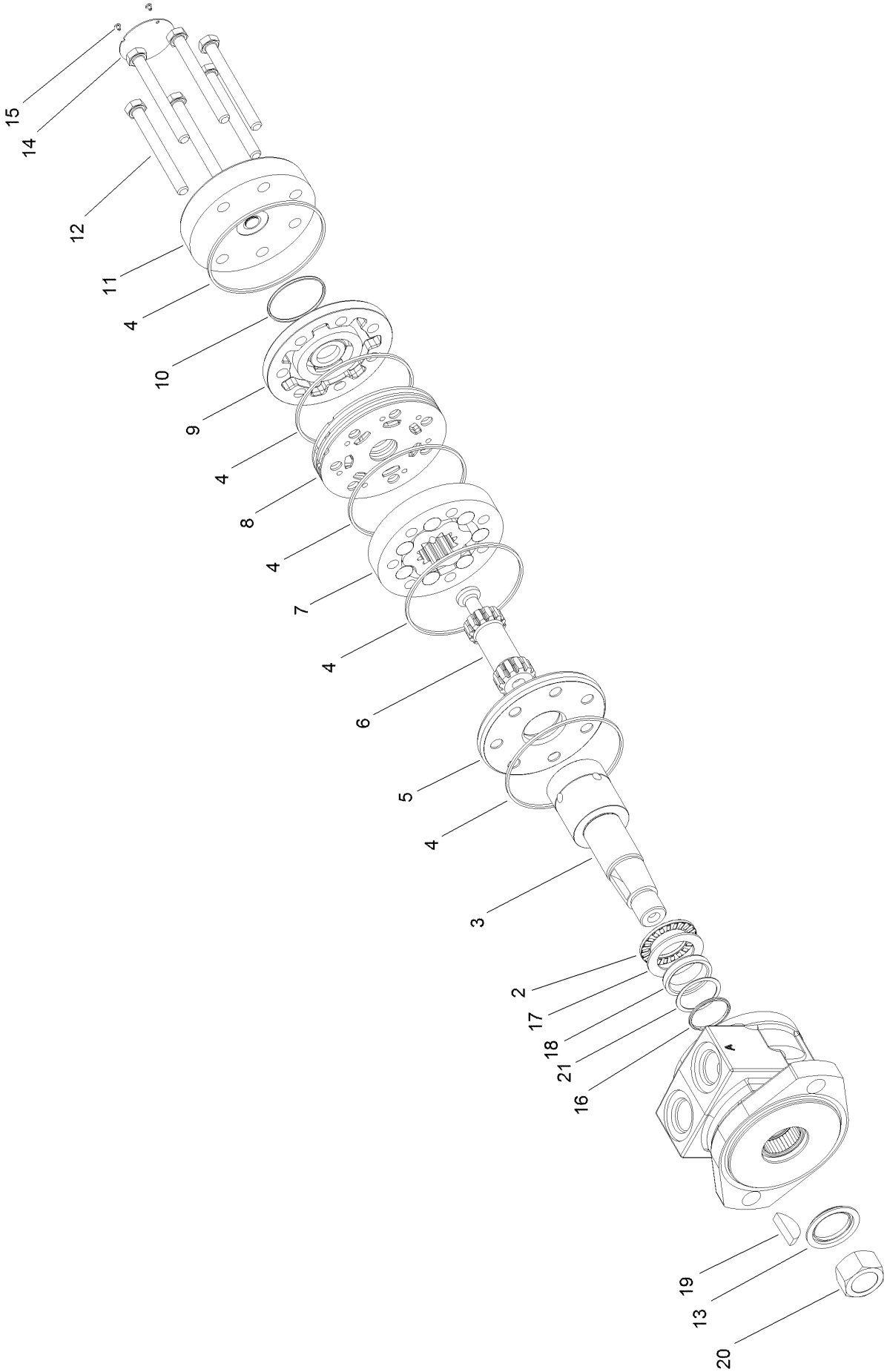

Hydraulic Motor Assembly No. 131-6431 (continued)

Ref.	Part Number	Qty.	Description
2	133-1761	1	Bearing-Thrust
3	133-1762	1	Shaft-Coupling
4	133-1763	5	Ring-Seal
5	133-1764	1	Plate-Wear
6	133-1765	1	Link-Drive
7	133-1766	1	Set-Rotor
8	133-1767	1	Manifold
9	133-1768	1	Commutator
10	133-1769	1	Seal-Commutator
11	133-1771	1	Cover-End
12	133-1772	6	Special Bolt
13	133-1773	1	Seal, Dirt And Water
14		1	Identification Tag ■
15	133-1774	2	Screw-Drive
16	133-1775	1	Ring-Back Up
17	133-1776	1	Washer-Thrust
18	133-1777	1	Shaft-Seal
19	3257-8	1	Key-Woodruff
20	85-7310	1	Nut-Motor, Wheel
21	133-1778	1	Washer-Back Up
99	133-1779	1	Seal Kit ●

● Not illustrated

■ Not serviced separately

Engine Assembly

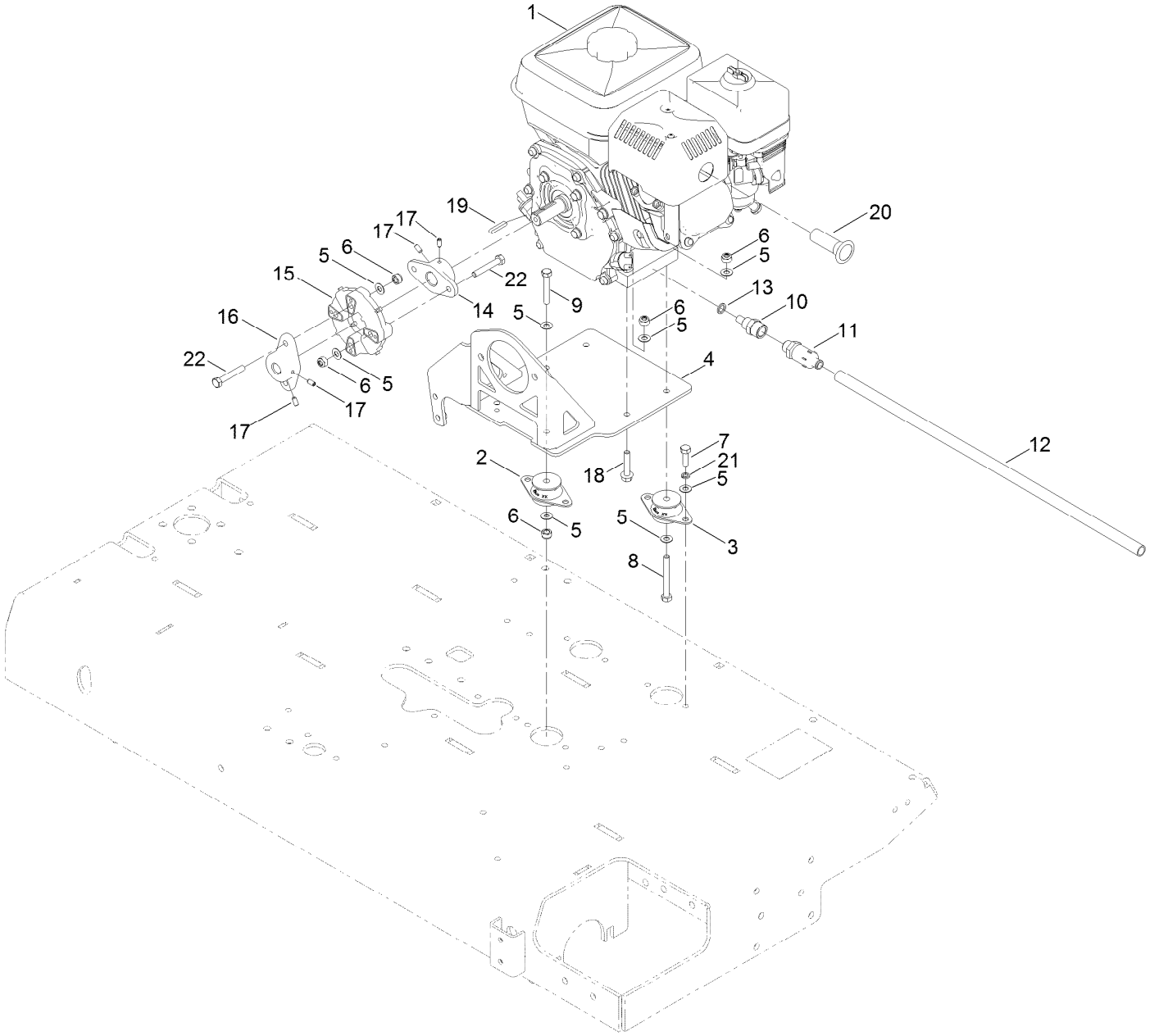

Engine Assembly (continued)

Ref.	Part Number	Qty.	Description
1	133-5627	1	Engine-Honda
2	132-4799	2	Mount-Engine
3	132-4803	2	Mount-Engine
4	132-9217-01	1	Engine Plate
5	09475	22	Washer
6	09441	10	Nut-Hex, NI
7	03162	8	Screw-HH
8	ZBH1H070U	2	Bolt
9	ZBH1H050U	2	Bolt
10	111-7088	1	Adaptor-Drain, Oil
11	92-6877	1	Valve-Drain, Oil
12	103-1964	1	Hose-Drain, Oil
13	111-7401	1	Washer-Plug, Sump
14	138-2243	1	Hub-Engine
15	119-0652	1	Coupler-Rubber
16	138-2244	1	Hub-Pump
17	133-1717	4	Screw-Set
18	33104-040	2	Screw-HHF
19	103-2739	1	Key
20	111-6526	1	Arrester-Spark
21	03469	8	Washer-Spring
22	ZBH1H050U	4	Bolt

Tire Assembly

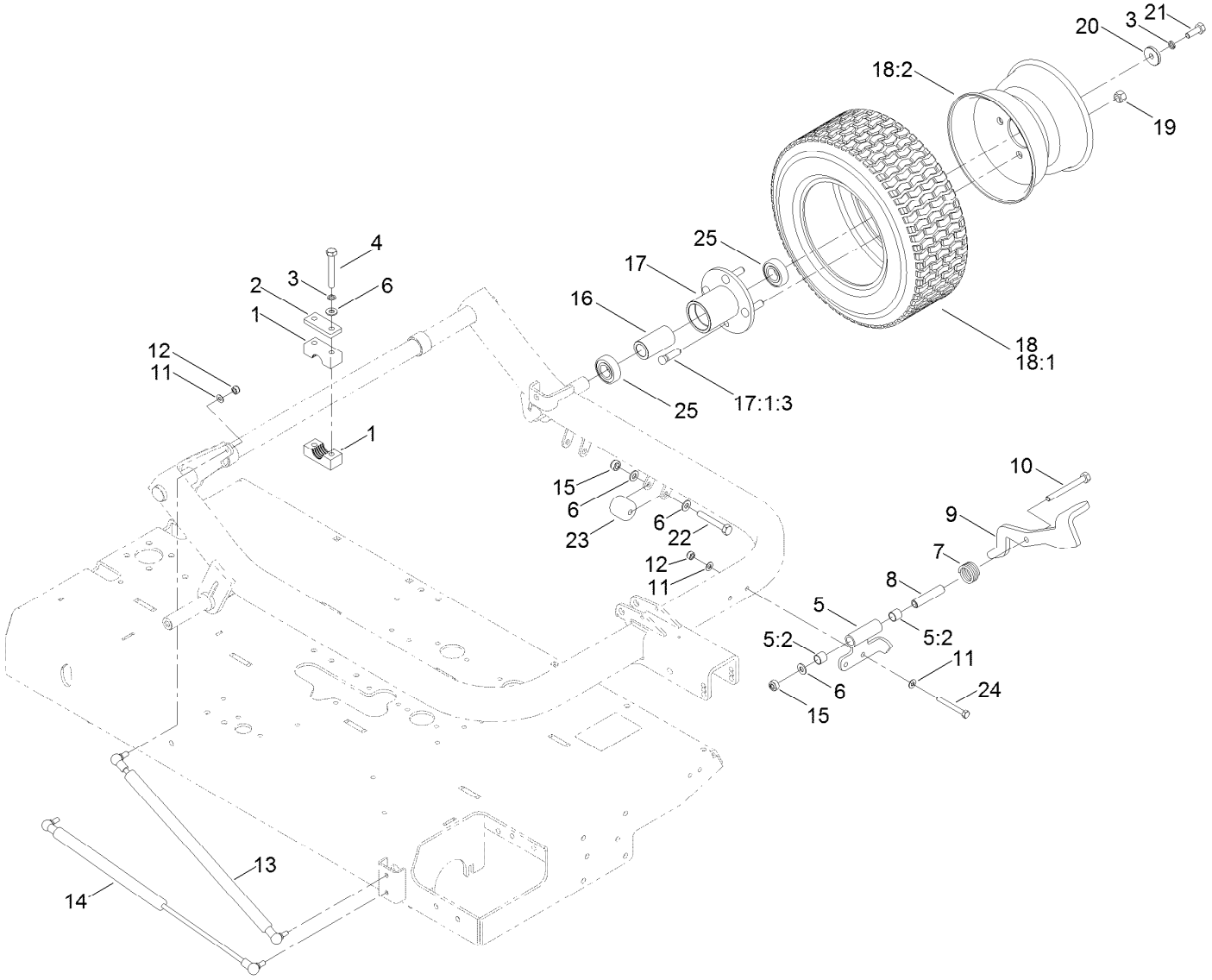

Tire Assembly (continued)

Ref.	Part Number	Qty.	Description
1	127-8044	3	Clamp-Drawbar
2	111-5681	3	Plate-Clamp, Axle
3	09480	8	Washer-Lock
4	ZBH1J075U	6	Bolt-HH
5	127-1351	1	Pedal Pivot ASM
5:2	256-311	2	Bushing-Split
6	ZWQ1J000U	11	Washer-Plain
7	127-1353	1	Spring-Torsion
8	127-1355	1	Spacer
9	138-9077-01	1	Pedal-Lift
10	ZBH1J095U	1	Bolt-HH
11	09475	6	Washer
12	09441	4	Nut-Hex, NI
13	127-1326	1	Damper
14	125-5696	1	Spring-Gas

Ref.	Part Number	Qty.	Description
15	ZNN1J000U	3	Nut-Hex, NI
16	111-5858	2	Spacer-Bearing
17	111-7103-03	2	Wheel Hub ASM
17:1		1	Wheel Hub ASM ■●
17:1:3	94-4143	4	Stud-Wheel
18	111-5678	2	Wheel And Tire ASM
18:1	111-5755	1	Tire
18:2	111-5756	1	Rim-Wheel
19	93-5268	8	Nut-Lug
20	111-5674	2	Collar-Fixing
21	09392	2	Screw-HH
22	09399	2	Bolt
23	127-1342	2	Roller
24	ZBH1H070U	2	Bolt
25	120-4621	4	Bearing

● Not illustrated

■ Not serviced separately

Lifting Mechanism Assembly

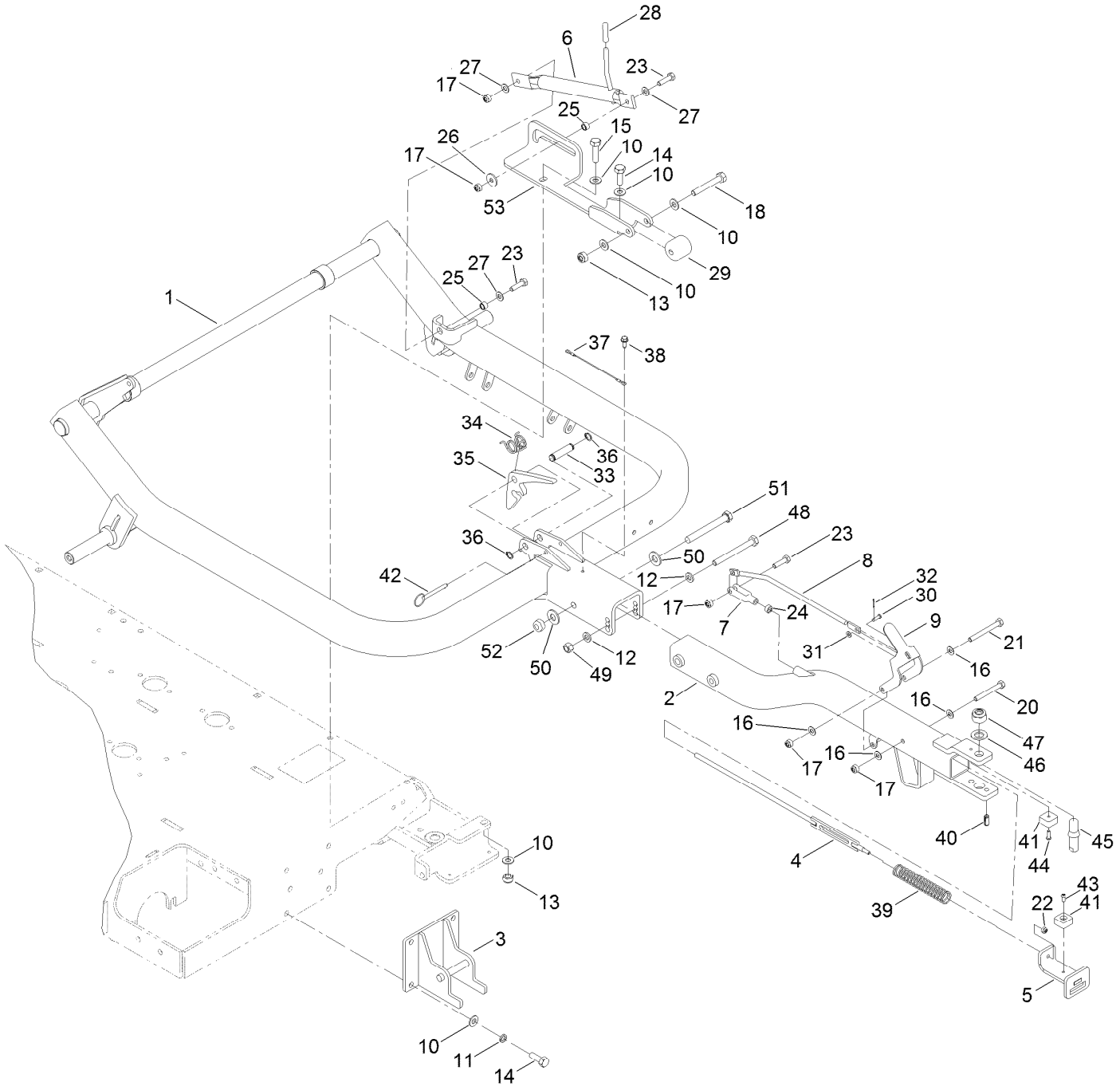

Lifting Mechanism Assembly (continued)

Ref.	Part Number	Qty.	Description
1	131-6437-01	1	Hitch Pivot ASM
2	132-4770-01	1	Hitch
3	132-7075-01	1	Bracket-Lock
4	125-5743	1	Lever-Slide
5	132-4775-01	1	Bracket-Slide
6	132-4826-01	1	Lever-Lock, Hitch
7	1-303105	1	Yoke-Adjustable
8	127-1317	1	Wire-Form
9	132-9262	1	Lever
10	ZWQ1J000U	10	Washer-Plain
11	09480	4	Washer-Lock
12	107-1413	2	Washer-Hardened
13	ZNN1J000U	3	Nut-Hex, NI
14	09392	5	Screw-HH
15	09611	1	Bolt-HH
16	09475	4	Washer
17	09441	5	Nut-Hex, NI
18	09399	1	Bolt
20	ZBH1H065U	1	Bolt
21	ZBH1H075U	1	Bolt
22	09438	1	Nut-Nyloc
23	09369	3	Screw-HH
24	09207	1	Nut
25	120-9697	2	Spacer
26	1-603716	1	Washer-Friction
27	3256-23	3	Washer-Plain
28	125-5722	1	Cap-Flex
29	127-1342	1	Roller
30	283-29	1	Pin-Clevis
31	3256-51	1	Washer-Flat
32	3272-1	1	Pin-Cotter
33	125-5731	1	Pin-Lock, Lever
34	125-5723	1	Spring-Torsion
35	125-5711-01	1	Latch-Hitch
36	32151-61	2	Ring-Retaining
37	28-8070	1	Lanyard
38	32144-10	1	Screw-HWH
39	125-5737	1	Spring-Compression
40	32121-123	1	Pin-Roll
41	94-1392	2	Pad-Rubber
42	108-0094	1	Pin-Cotterless
43	127-5866	1	Screw-HSBH
44	119-7568	1	Screw-HSBH
45	127-5861	1	Pin-Tow
46	09491	1	Washer-Plain
47	09456	1	Nut
48	127-5864	1	Screw-HH
49	131-1558	1	Nut-Lock
50	87-7270	2	Washer-Thrust
51	131-1557	1	Screw-HH
52	94-4307	1	Nut-Hex, Lock
53	133-1756-01	1	Bracket-Slide

Seat Assembly

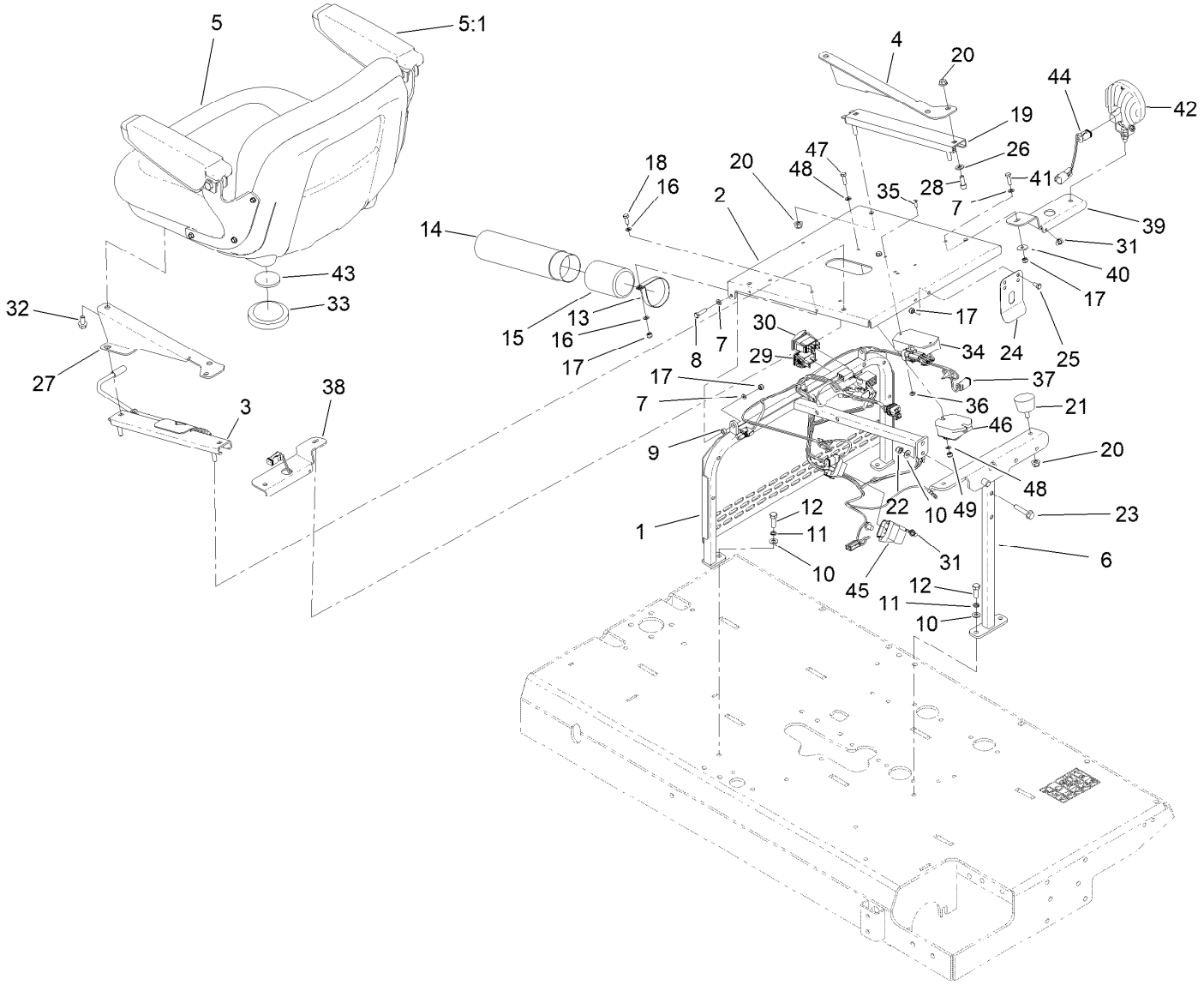

Seat Assembly (continued)

Ref.	Part Number	Qty.	Description
1	131-6449-03	1	Seat Support
2	131-6447-03	1	Seat Pan
3	133-8896	1	Seat Adjuster Lever ASM
4	131-6448-03	1	Bracket-Seat, RH
5	133-1729	1	Seat Assembly
5:1	111-6564	1	Arm Rest Kit
6	132-4751-01	1	Support-Frame, Rear
7	09472	6	Washer-Plain
8	ZBH1F025U	2	Bolt-HH
9	88-7860	2	Spacer
10	09475	5	Washer
11	03469	4	Washer-Spring
12	03162	4	Screw-HH
13	107-1865	2	R-Clamp
14	104-7050	1	Tube-Manual
15	104-7048	1	Cap-Housing
16	ZWP1F000U	4	Washer-Plain
17	09438	8	Nut-Nyloc
18	09362	2	Screw-HH
19	92-8990	1	Adjuster-Seat, Non-Locking
20	104-8300	10	Nut-HF, NI
21	68-3270	2	Bumper-Rubber
22	09441	1	Nut-Hex, NI
23	33104-040	1	Screw-HHF
24	66-2630	1	Latch-Seat
25	09361	2	Screw-HH
26	3256-23	4	Washer-Plain
27	132-4750-03	1	Bracket-Seat, LH
28	3274-10	4	Screw-HSH
29	120-2244	1	Hourmeter
30	119-8355	1	Switch-Rocker
31	HY3966	9	Tie-Cable
32	33104-016	4	Screw-HHF
33	100-3524	1	Switch-Seat
34	122-0423	1	Module-Ground, Magneto
35	32105-8	2	Screw-SHH
36	110-3145	2	Nut-Lock
37	122-2353	1	Harness-Wire, Greens Roller
38	132-4806-03	1	Light Mount
39	132-4805-03	1	Light Mount
40	09263	2	Washer
41	09363	2	Screw-HH
42	133-8793	2	Light-LED
43	133-2797	1	Disc-Plunger
44	122-1869	2	Harness-Wire, Jumper
45	99-7430	1	Relay-Mini
46	119-4320	1	Regulator
47	09363	2	Screw-HH
48	09472	2	Washer-Plain
49	09438	2	Nut-Nyloc
99	107-0342	1	Sealant-Electrical ●

● Not illustrated

Steering Wheel Assembly

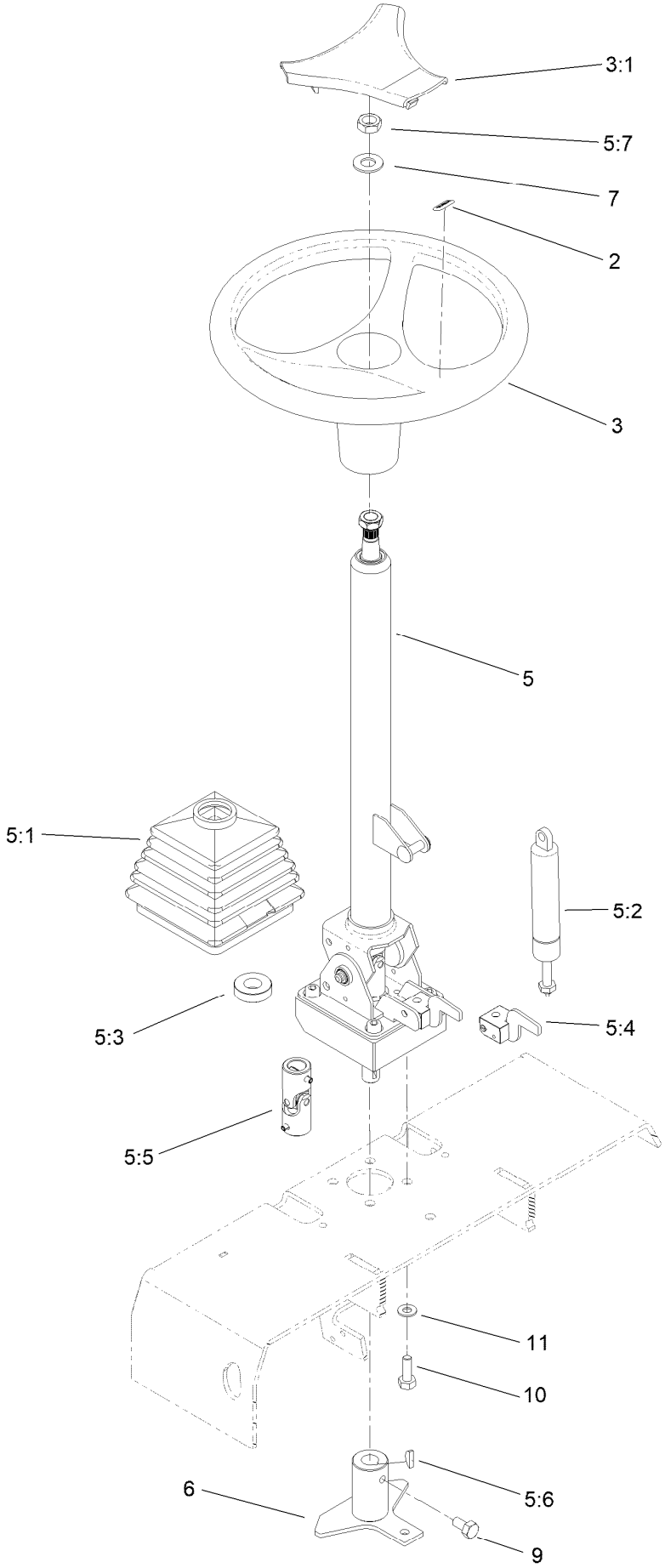

Steering Wheel Assembly (continued)

Ref.	Part Number	Qty.	Description
2	98-1459	1	Decal
3	98-1471	1	Wheel-Steering
3:1	98-1468	1	Cover-Wheel, Steering
5	140-0343	1	Column-Steering
5:1	140-0347	1	Boot
5:2	140-0348	1	Damper
5:3	144-7206	2	Bearing-Column
5:4	144-7207	1	Pedal ASM-Service
5:5	144-7208	1	U-Joint Kit-Service
5:6	3257-7	1	Key-Woodruff
5:7	3220-6	1	Nut-Jam
6	132-7084-01	1	Steering Pivot
7	3256-27	1	Washer-Flat
9	09391	1	Screw-HH
10	09392	4	Screw-HH
11	ZWQ1J000U	4	Washer-Plain

Parking Brake Assembly

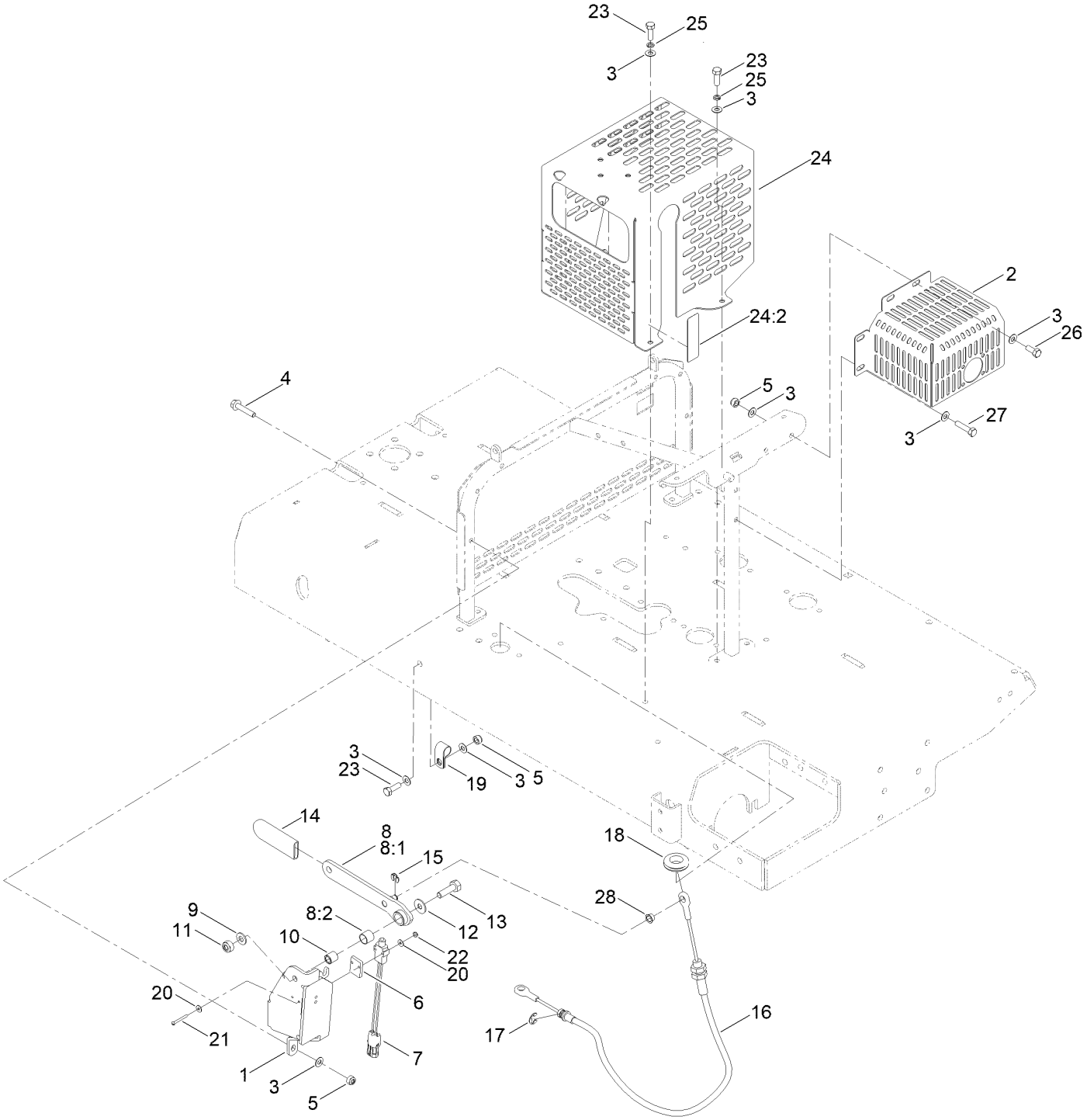

Parking Brake Assembly (continued)

Ref.	Part Number	Qty.	Description
1	132-4837-03	1	Support-Lever, Brake
2	132-4801-03	1	Guard-Exhaust
3	09475	14	Washer
4	33104-040	3	Screw-HHF
5	09441	7	Nut-Hex, NI
6	131-6383	1	Spacer
7	99-3410	1	Switch
8	132-4839	1	Brake Handle ASM
8:1	132-4838	1	Lever-Brake
8:2	256-311	1	Bushing-Split
9	ZWQ1J000U	1	Washer-Plain
10	131-6386	1	Bushing-Pivot
11	ZNN1J000U	1	Nut-Hex, NI
12	HY03355	1	Washer-Plated
13	09394	1	Bolt
14	21-1880	1	Grip-Handle
15	32151-47	1	Ring-Retaining
16	136-6225	1	Cable-Brake, Park
17	32120-47	1	Ring-Retaining, External
18	1-543286	1	Grommet
19	2412-41	1	Clamp-R
20	3269-6	4	Washer-Flat
21	3249-11	2	Screw-Machine
22	3296-9	2	Nut-Hex
23	03162	4	Screw-HH
24		1	Transmission Cover W/Decal ●
24:2	120-0627	1	Decal-Warning
25	03469	3	Washer-Spring
26	09368	2	Screw-HH
27	ZDH1H035U	1	Screw-HH
28	132-9291	1	Bushing-Cable

● Not serviced separately

Control Assembly

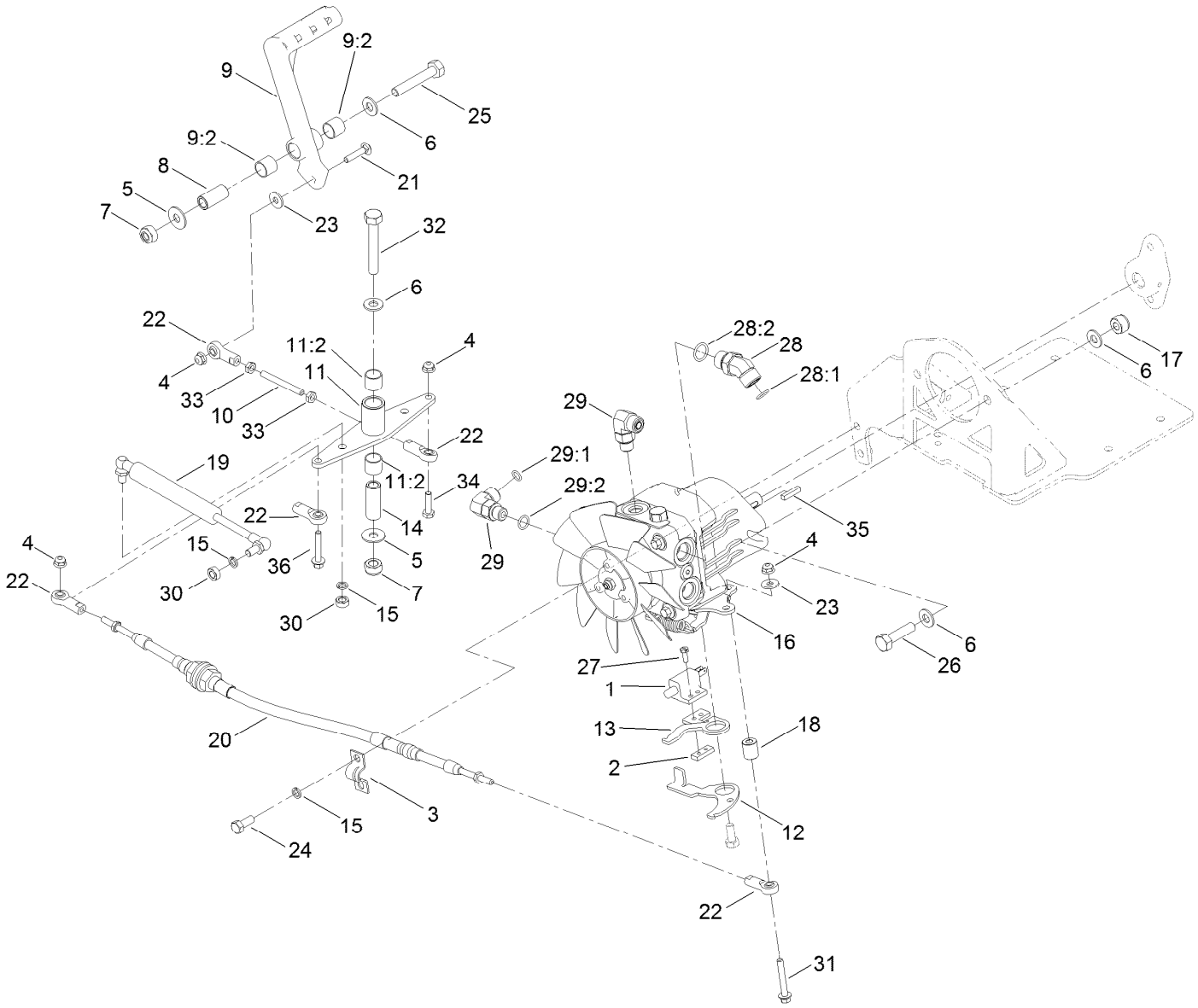

Control Assembly (continued)

Ref.	Part Number	Qty.	Description
1	1-513051	1	Switch-Open, Normally
2	1-633181	1	Plate-Tapped
3	93-2092	1	Clamp-Cable
4	104-7201	5	Nut-HF
5	HY03355	3	Washer-Plated
6	ZWQ1J000U	7	Washer-Plain
7	ZNN1J000U	3	Nut-Hex, NI
8	131-6350	2	Bushing-Pivot
9	138-2206	2	Traction Pedal ASM
9:2	256-311	2	Bushing-Split
10	132-9224	2	Rod-Pedal
11	138-9084	1	Traction Bellcrank ASM
11:2	256-311	2	Bushing-Split
12	138-9106	1	Arm
13	132-4796	1	Arm
14	138-9085	1	Bushing-Pivot
15	03469	4	Washer-Spring
16	132-4797	1	Pump-Hydraulic
17	09447	2	Nut
18	132-4798	1	Bushing
19	132-4807	1	Damper

Ref.	Part Number	Qty.	Description
20	132-7098	1	Cable-Traction
21	3229-3	2	Screw-CARR
22	2411-41	6	Rod End-Ball Joint
23	3256-78	3	Washer-Flat
24	09368	2	Screw-HH
25	09397	2	Bolt
26	09611	2	Bolt-HH
27	32105-8	2	Screw-SHH
28	340-101	2	Fitting-HYD, 45 DEG
28:1	237-30	1	O-Ring
28:2	237-79	1	O-Ring
29	340-77	2	Fitting-Elbow, 90 DEG
29:1	237-22	1	O-Ring
29:2	237-42	1	O-Ring
30	ZNH1H000U	2	Nut-Hex
31	32105-18	1	Screw-HHF
32	09399	1	Bolt
33	3220-1	4	Nut-Jam
34	321-6	1	Screw-HH
35	111-5724	1	Key-Square
36	94-5781	1	Screw-HHF

Hydraulic Pump Assembly No. 132-4797

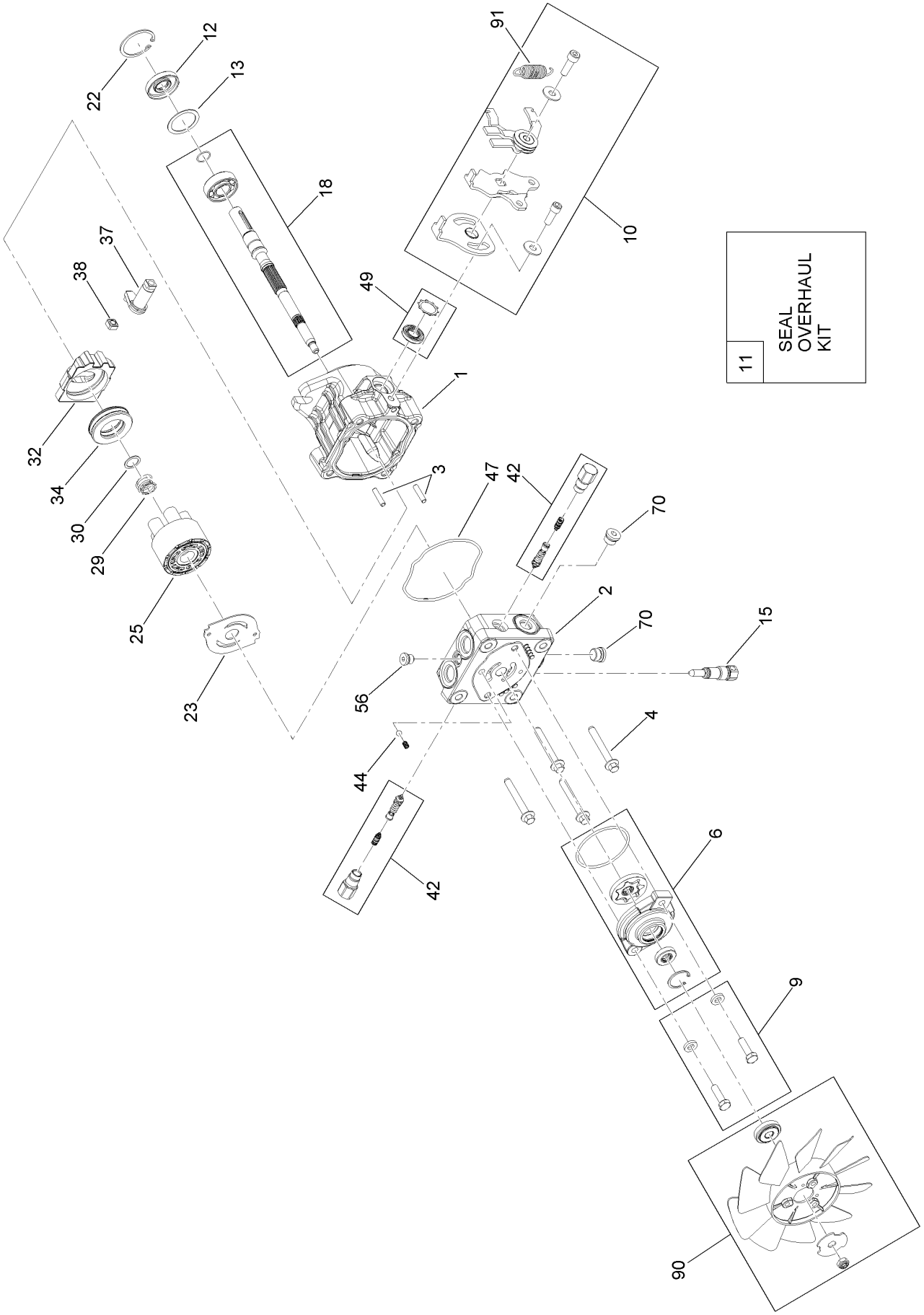

Hydraulic Pump Assembly No. 132-4797 (continued)

Ref.	Part Number	Qty.	Description
1	133-1780	1	Housing Kit
2	133-1781	1	Endcap Kit
3	106-8753	2	Pin-Headless, Straight
4	133-1783	4	Hex Flange Bolt
6	133-1784	1	STD Charge Pump Kit
9	133-1785	1	Charge Pump Bolt Kit
10	115-4459	1	Return Kit
11	105-6184	1	Seal Overhaul Kit ●
12	104-5310	1	Seal-Lip
13	133-1787	1	Washer-Flat
15	106-8759	1	Bypass Valve Kit
18	133-1789	1	Shaft Kit
22	104-5309	1	Ring-Retaining
23	105-6185	1	Plate-Valve
25	103-2666	1	Cylinder Block Kit
29	133-1793	1	Spring-Block
30	133-1794	1	Washer-Flat
32	133-1795	1	Swashplate-Coated, 10Cc
34	121-3235	1	Bearing-Thrust, Plastic Cage
37	133-1797	1	Arm-Trunnion, Square (Taper)
38	133-1798	1	Slot-Guide
42	133-1799	2	Shock Valve 160 Bar Kit
44	136-6150	1	Charge Relief Kit
47	125-4682	1	O-Ring
49	106-8761	1	Trunnion Seal / Retainer Kit
56	106-8762	1	Plug-HSH
70	104-2189	2	Plug-Thread, Straight
90	136-6154	1	Fan/Hub Kit
91	115-8307	1	Spring-Extension

● Not illustrated

Model Specific Decal Assembly

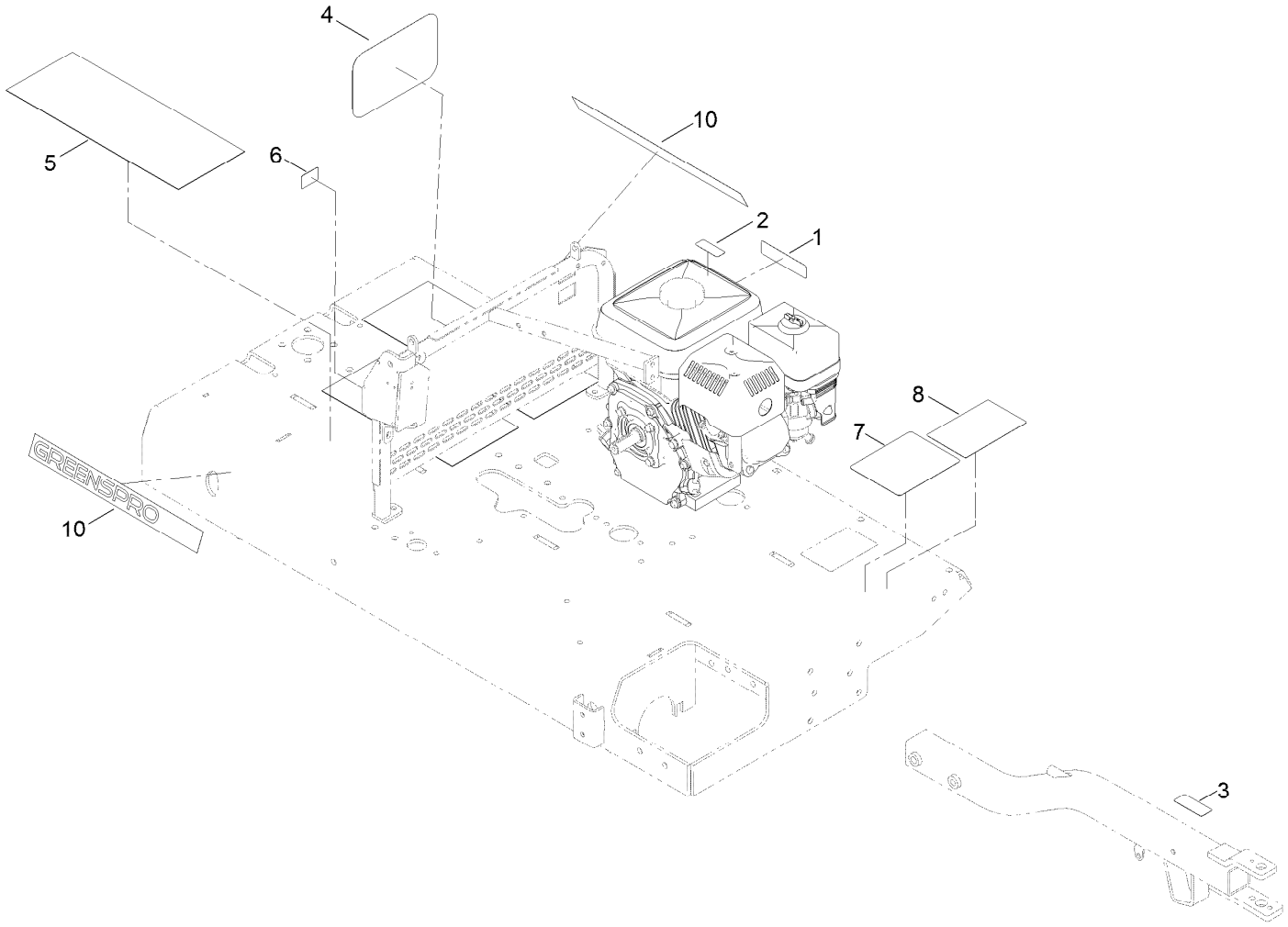

Model Specific Decal Assembly (continued)

Ref.	Part Number	Qty.	Description
1	133-8062	1	Decal-Arrestor, Spark
2	130-8322	1	Decal-Warning, Ethanol
3	127-5885	1	Decal-Disconnect, Hitch
4	67-7320	1	Decal
5	70-07-067	4	Tape-Slip, Anti
6	131-0440	1	Decal-Brake, Parking
7	140-0268	1	Decal-Service, Gp1260
8	127-5884	1	Decal-Operation
10	132-9298	2	Decal

Cylinder Head Assembly

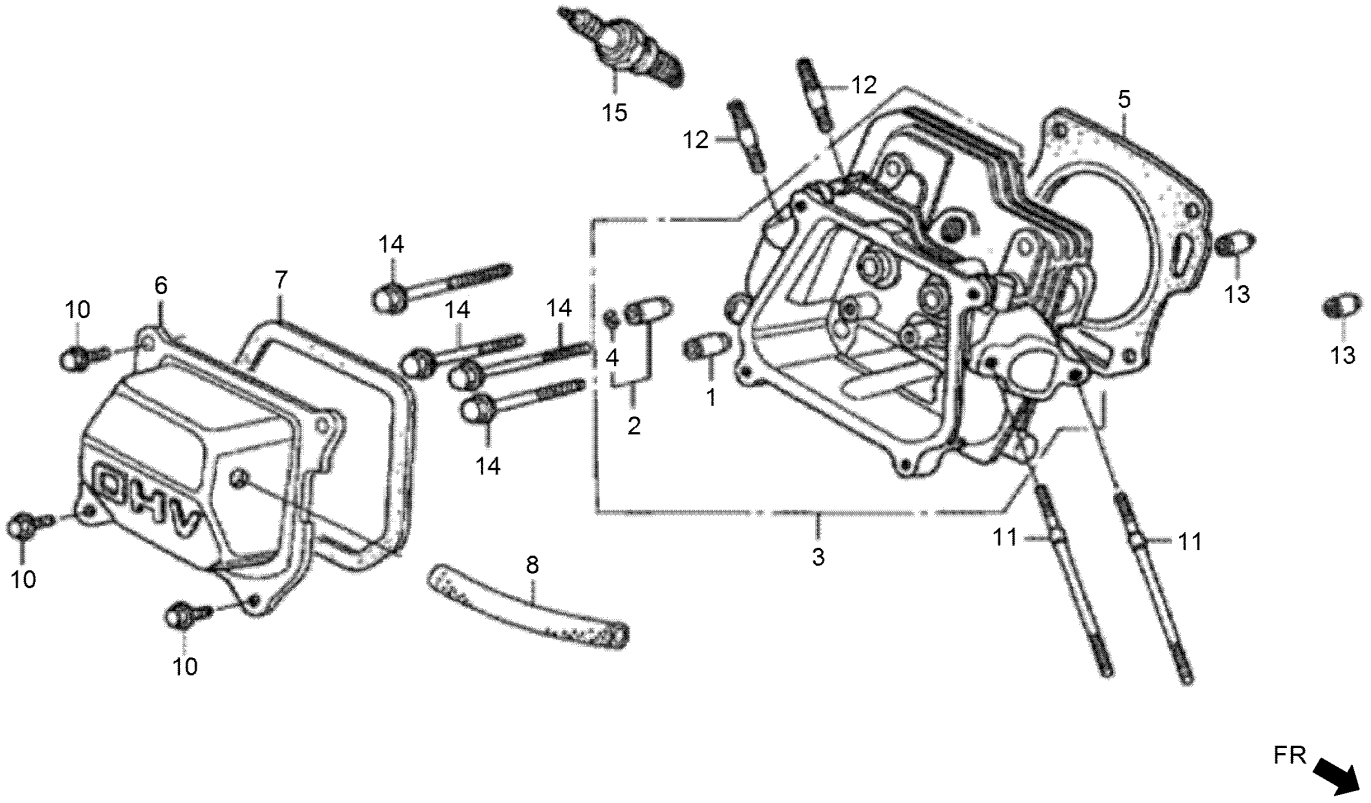

Cylinder Head Assembly (continued)

Ref.	Part Number	Qty.	Description
1	132-0118	1	Guide-Intake Valve
2	132-0119	1	Guide-Exhaust Valve
3	132-0124	1	Cylinder Head ASM
4	132-0125	1	Clip-Valve Guide
5	132-0126	1	Gasket-Cylinder Head
6	132-0127	1	Head Cover ASM
7	132-0133	1	Packing-Head Cover
8	132-0234	1	Tube-Breather
10	132-4880	4	Bolt-Flange-6X12
11	132-0612	2	Bolt-Stud-6X112
12	132-0615	2	Bolt-Stud-8X32
13	132-0697	2	Dowel Pin-10X16
14	131-8226	4	Bolt-Flange-8X60
15	81-3250	1	Spark Plug

Cylinder Barrel Assembly

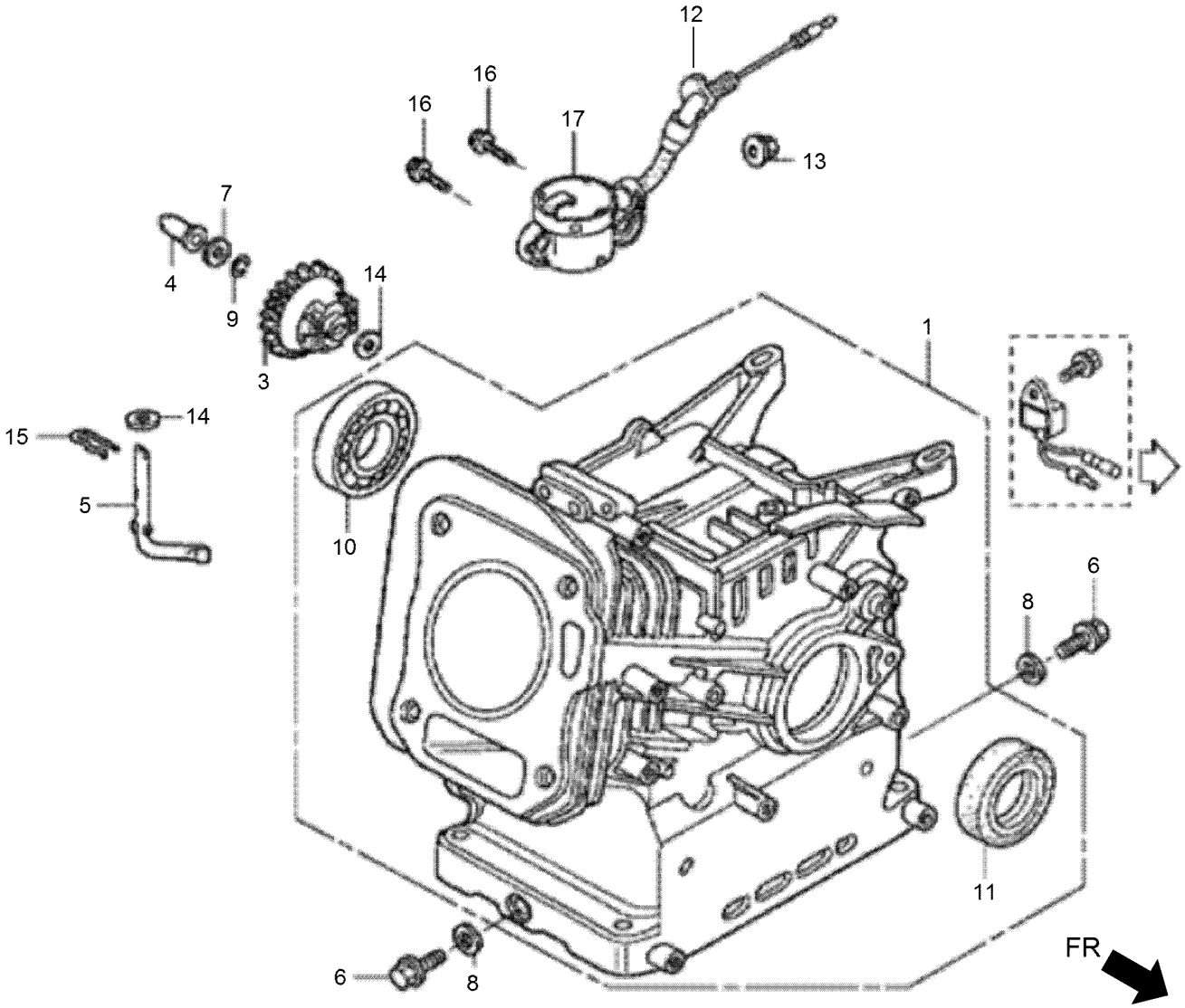

Cylinder Barrel Assembly (continued)

Ref.	Part Number	Qty.	Description
1	132-0114	1	Barrel ASM-Cylinder
3	132-0294	1	Governor ASM
4	132-0304	1	Slider-Governor
5	132-0307	1	Shaft-Governor Arm
6	132-0622	2	Bolt-Drain Plug
7	132-0635	1	Washer-Thrust-6Mm
8	132-0640	2	Washer-Drain Plug-10.2Mm
9	132-0642	1	Clip-Governor Holder
10	132-0651	1	Bearing-Radial Ball
10	132-0650	1	Bearing-Radial Ball
10	132-0649	1	Bearing-Radial Ball
11	132-0654	1	Oil Seal-25X41X6
11	132-0658	1	Oil Seal-25X41.25X6
12	132-0668	1	O-Ring-14Mm
13	132-0686	1	Nut-Flange-10Mm
14	132-0688	2	Washer-Plain-6Mm
15	132-0693	1	Pin-Lock-8Mm
16	131-8221	2	Bolt-Flange-6X12
17	132-0532	1	Switch ASM-Oil Level

Crankcase Cover Assembly

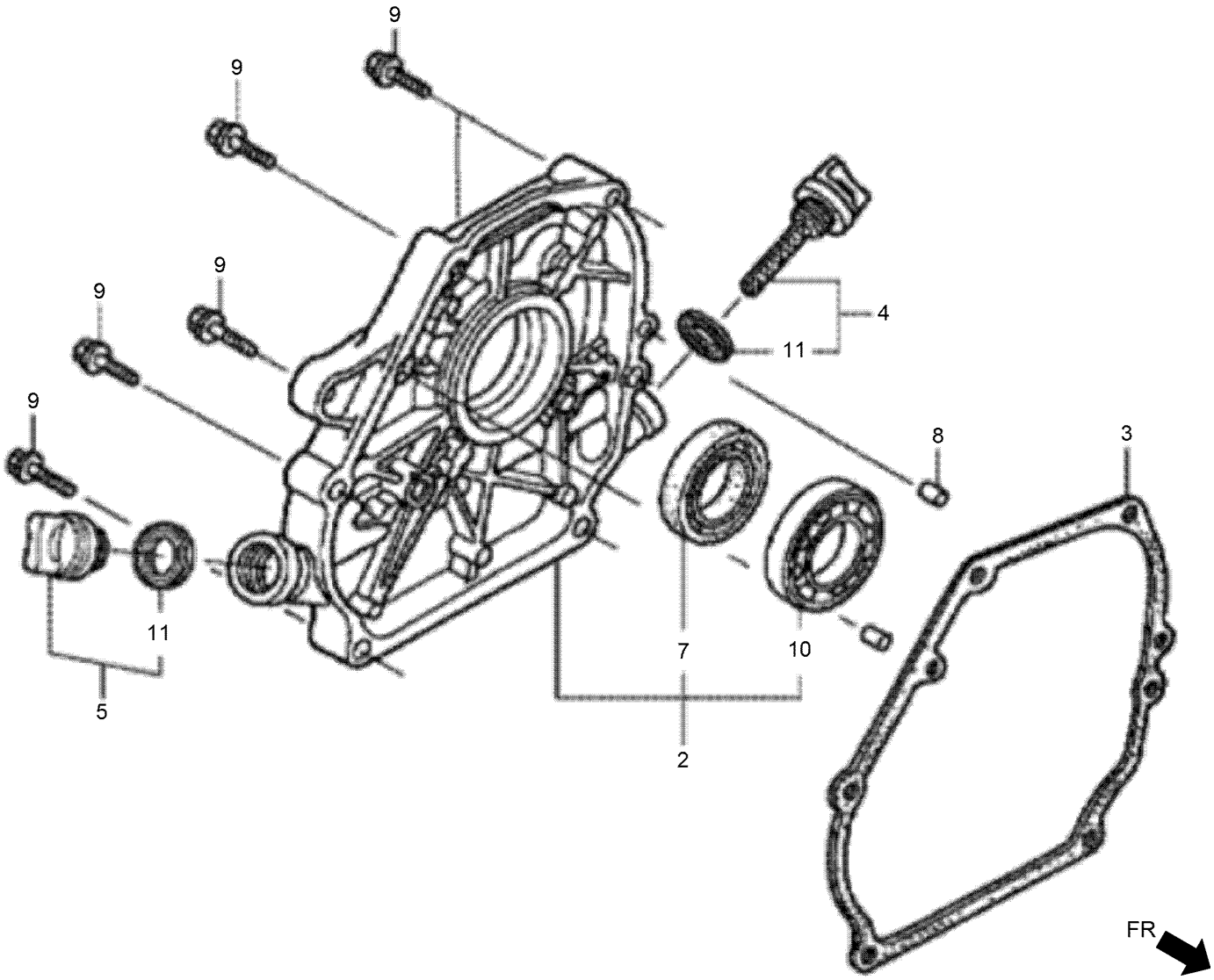

Crankcase Cover Assembly (continued)

Ref.	Part Number	Qty.	Description
2	132-0103	1	Cover ASM-Crankcase
3	132-0108	1	Packing-Case Cover
4	132-0220	1	Cap ASM-Oil Filler
5	132-0221	1	Cap ASM-Oil Filler
7	132-0654	1	Oil Seal-25X41X6

Ref.	Part Number	Qty.	Description
7	132-0658	1	Oil Seal-25X41.25X6
8	132-0695	2	Dowel Pin-8X14
9	131-8225	6	Bolt-Flange-8X32
10	131-8227	1	Bearing-Radial Ball-6205
11	132-0224	2	Packing-Oil Filler Cap

Crankshaft Assembly

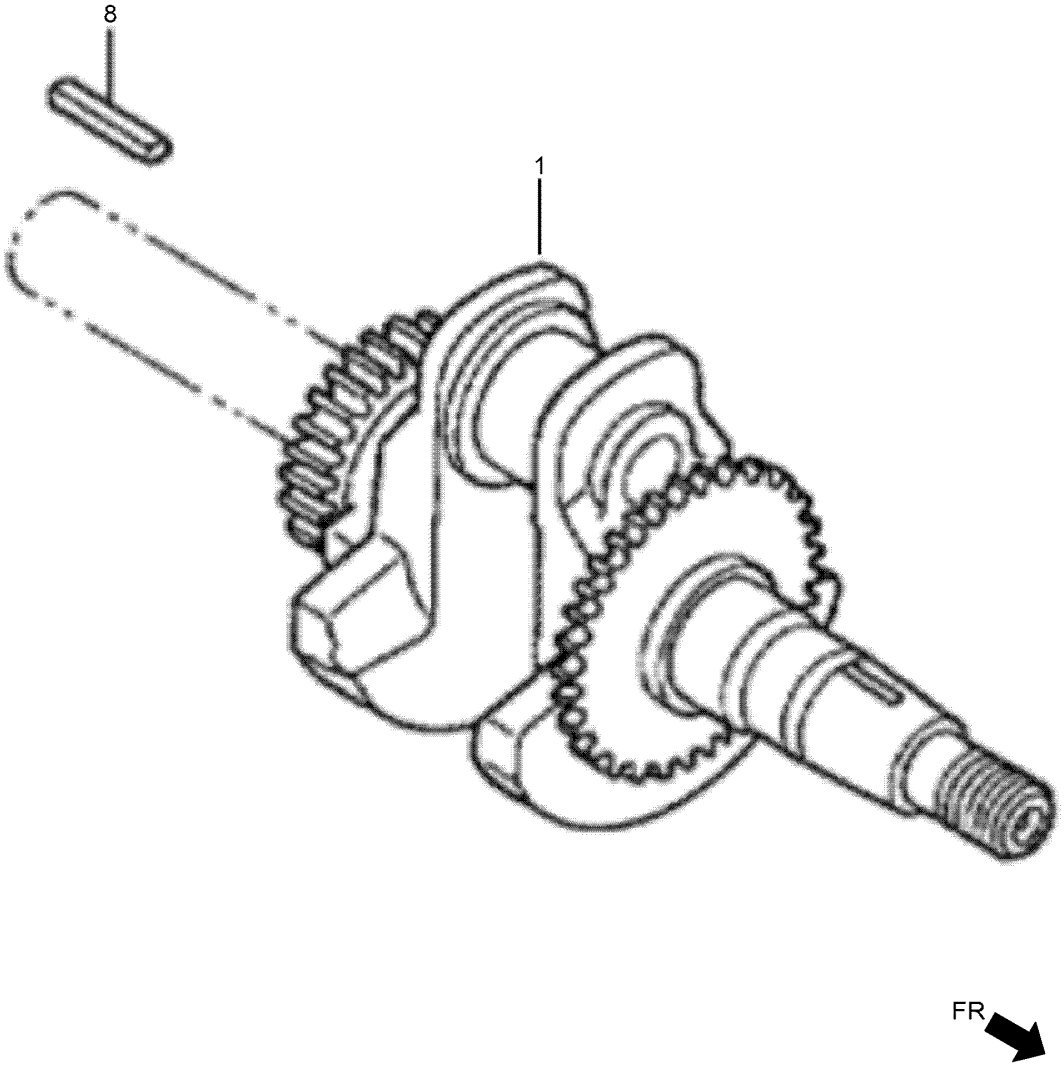

Crankshaft Assembly (continued)

Ref.	Part Number	Qty.	Description
1	132-0164	1	Crankshaft ASM
8	132-0647	1	Key-5X5X33

Piston and Connecting Rod Assembly

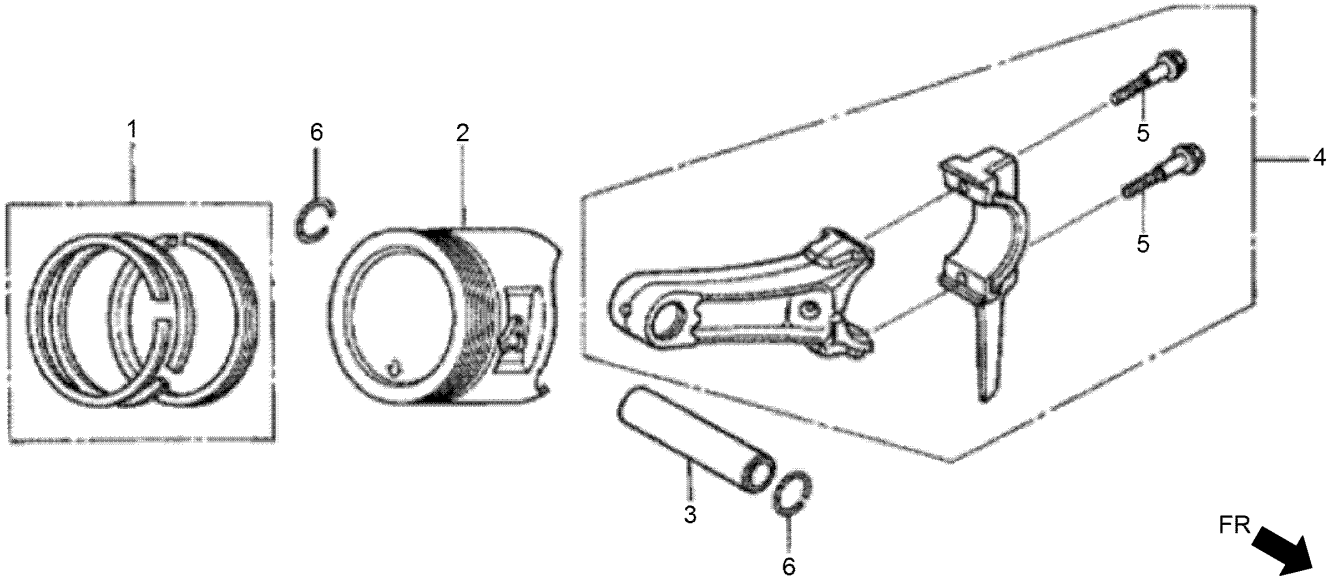

Piston and Connecting Rod Assembly (continued)

Ref.	Part Number	Qty.	Description
1	132-0137	1	Ring Set-Piston (STD)
1	132-0138	1	Ring Set-Piston (STD)
2	132-0144	1	Piston
3	132-0150	1	Pin-Piston
4	132-0155	1	Rod ASM-Connecting
5	132-0573	2	Bolt-Connecting Rod
6	132-0637	2	Clip-Piston Pin-18Mm

Camshaft Assembly

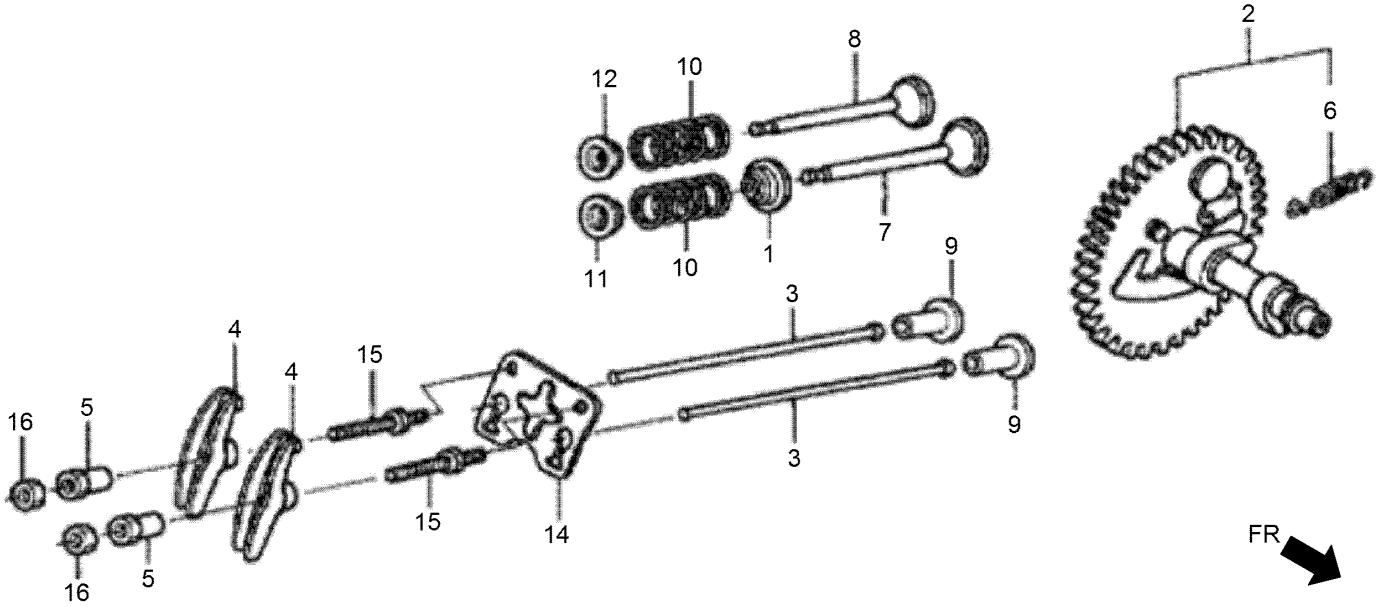

Camshaft Assembly (continued)

Ref.	Part Number	Qty.	Description
1	132-0120	1	Seal-Valve Stem
2	132-0172	1	Camshaft ASM
3	132-0181	2	Rod-Push
4	132-0184	2	Arm-Valve Rocker
5	132-0188	2	Pivot-Rocker Arm
6	132-0191	1	Spring-Weight Return
7	132-0194	1	Valve-Intake
8	132-0198	1	Valve-Exhaust
9	132-0203	2	Lifter-Valve
10	132-0206	2	Spring-Valve
11	132-0211	1	Retainer-Intake Valve Spring
12	132-0211	1	Retainer-Intake Valve Spring
14	132-0215	1	Plate-Push Rod Guide
15	132-0592	2	Bolt-Pivot-8Mm
16	132-0629	2	Nut-Pivot Adjusting

Recoil Starter Assembly

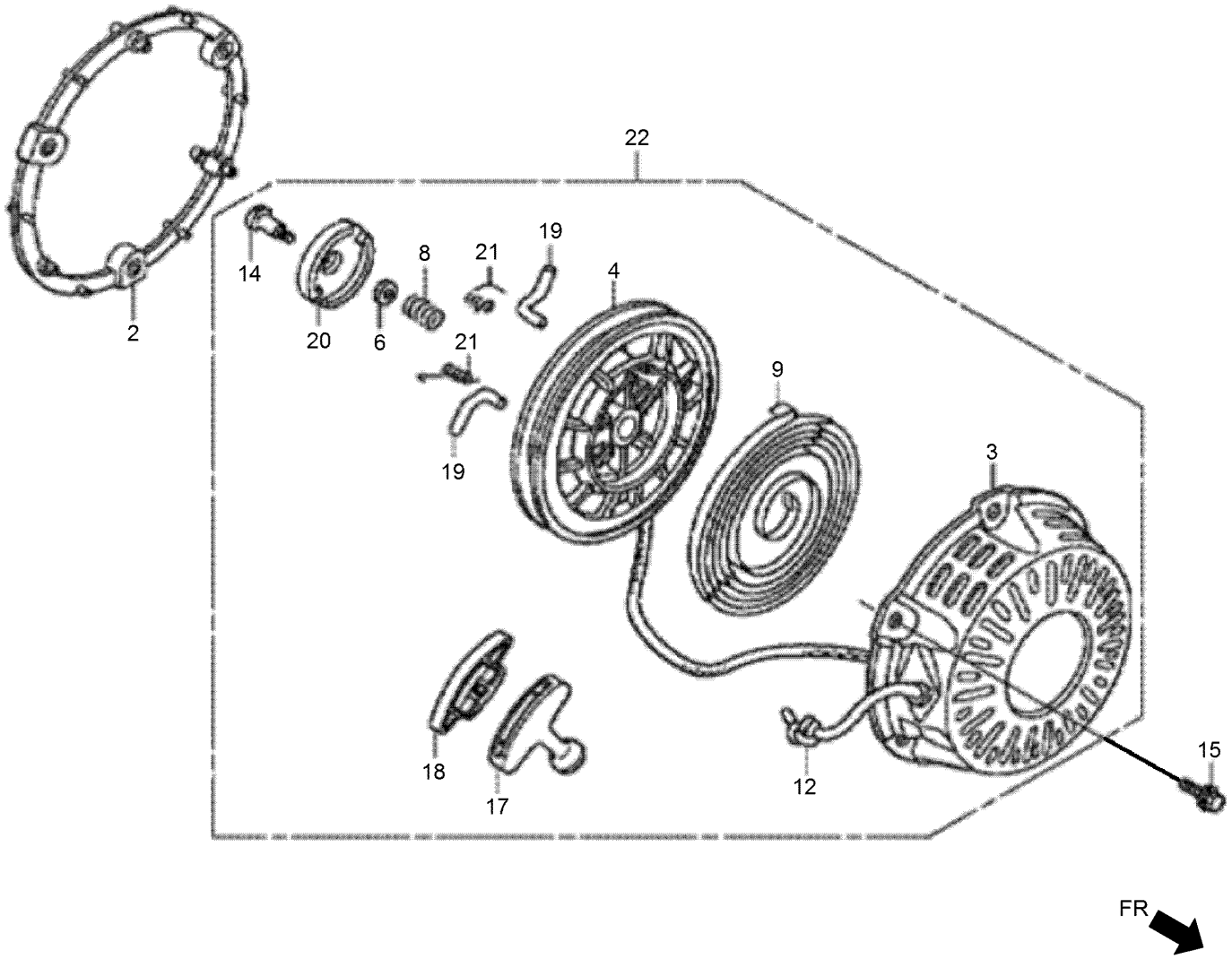

Recoil Starter Assembly (continued)

Ref.	Part Number	Qty.	Description
2	132-0485	1	Spacer-Recoil Starter Mtg
3	132-0486	1	Recoil Starter Case ASM (R280)
4	138-9142	1	Reel-Recoil, Starter
6	132-0492	1	Plate-Friction
8	132-0494	1	Spring-Friction
9	132-0495	1	Spring-Recoil Starter
12	132-0507	1	Rope-Recoil Starter
14	132-0579	1	Screw-Setting
15	131-8223	3	Bolt-Flange-6X18
17	132-0502	1	Knob-Recoil Starter
18	132-0509	1	Knob-Reinforcement
19	138-9143	2	Ratchet-Starter
20	138-9144	1	Guide-Ratchet
21	138-9145	2	Spring-Return
22	138-9123	1	Starter ASM-Recoil

Fan Cover Assembly

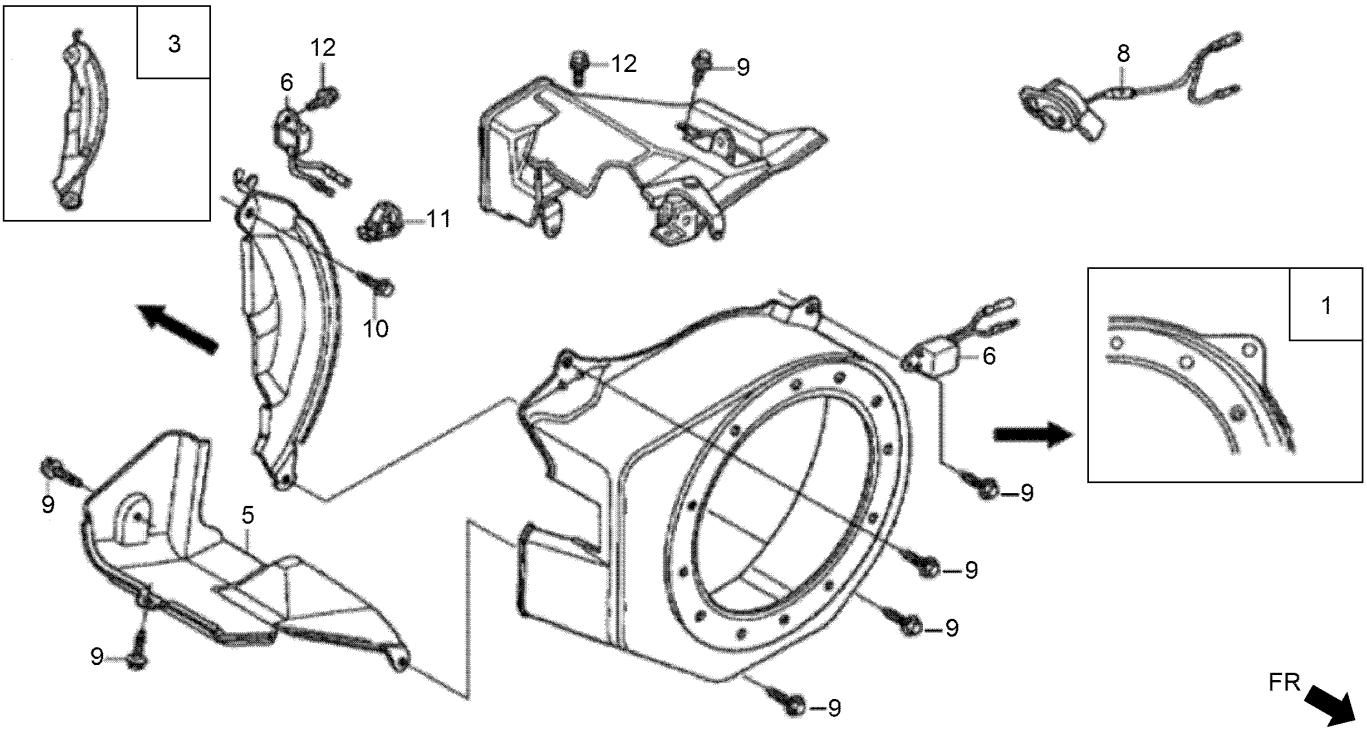

Fan Cover Assembly (continued)

Ref.	Part Number	Qty.	Description
1	132-0464	1	Fan Cover ASM (R280)
3	132-0469	1	Side Plate ASM
5	132-0473	1	Shroud ASM
6	132-0529	1	Alert Unit-Oil
8	140-0251	1	Switch ASM., Engine Stop (Toyo Denso)
8	140-0252	1	Switch ASM., Engine Stop (Minda)
9	132-4880	6	Bolt-Flange-6X12
10	132-0605	1	Bolt-Flange-6X20
11	132-0641	1	Clip-Harness
12	131-8220	1	Bolt-Flange-6X8

Carburetor Assembly

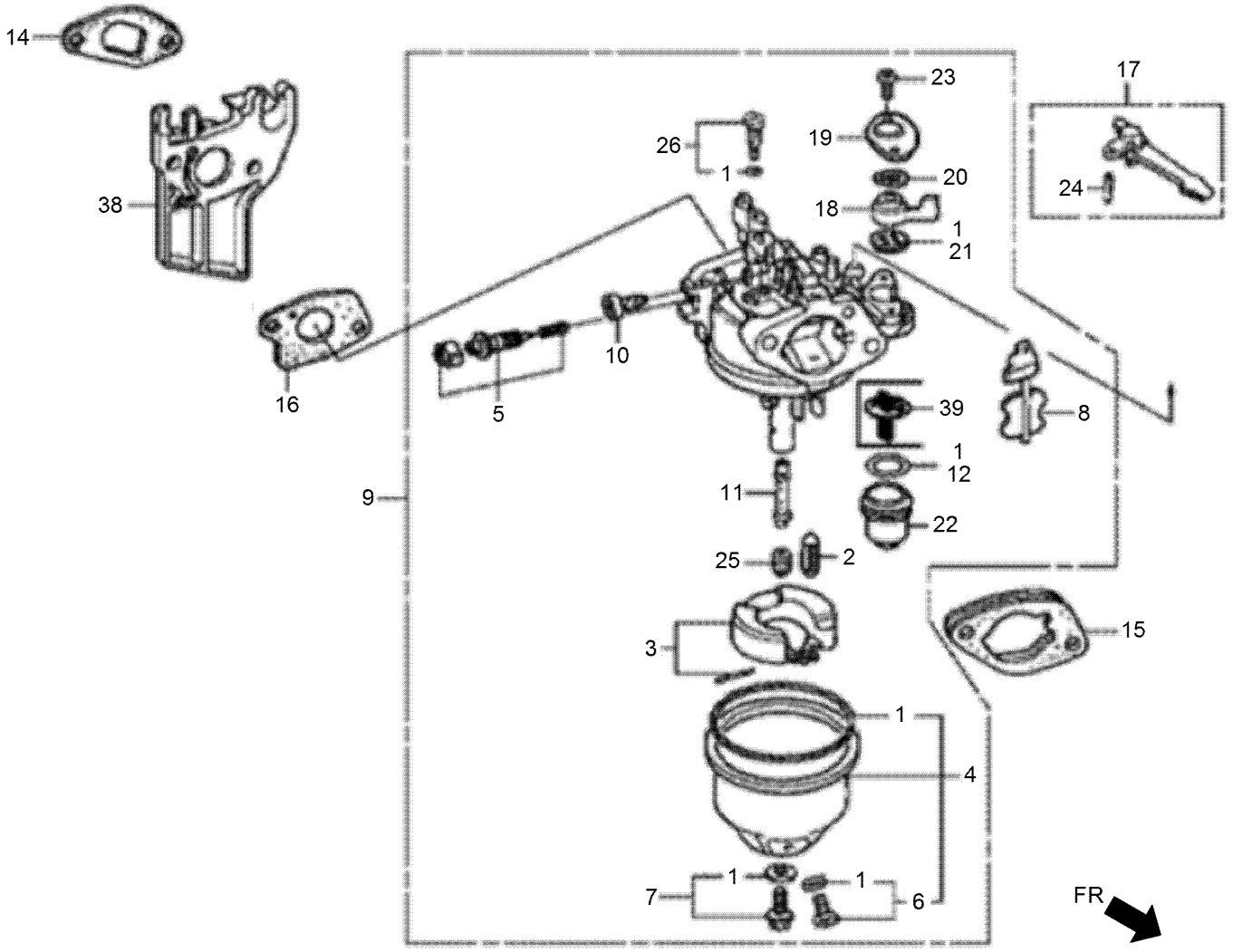

Carburetor Assembly (continued)

Ref.	Part Number	Qty.	Description
1	132-0239	1	Gasket Set
2	132-0241	1	Valve Set-Float
3	132-0242	1	Float Set
4	132-0247	1	Chamber Set-Float
5	132-0250	1	Screw Set-Pilot
6	132-0251	1	Screw Set-Drain
7	132-0253	1	Screw Set
8	132-0257	1	Choke Set
9	132-0265	1	Carburetor ASM
10	132-0268	1	Screw-Throttle Stop
11	132-0272	1	Nozzle-Main
12	132-0276	1	Packing-Fuel Strainer Cup
14	132-0281	1	Packing-Insulator
15	132-0284	1	Carburetor Spacer ASM
16	132-0287	1	Packing-Carburetor
17	132-0343	1	Choke Lever ASM
18	132-0359	1	Lever-Cock
19	132-0360	1	Plate-Lever Setting
20	132-0362	1	Spring-Cock Lever
21	132-0364	1	Packing-Fuel Cock
22	132-0366	1	Cup-Fuel Strainer
23	132-0676	2	Screw-Pan-3X6
24	132-0698	1	Pin-Spring-2X12
25	131-8237	1	Jet-Main, No. 75
26	131-8239	1	Jet Set-Pilot, No. 40
38	132-0278	1	Insulator-Carburetor
39	132-0365	1	Filter-Cup

Air Cleaner Assembly

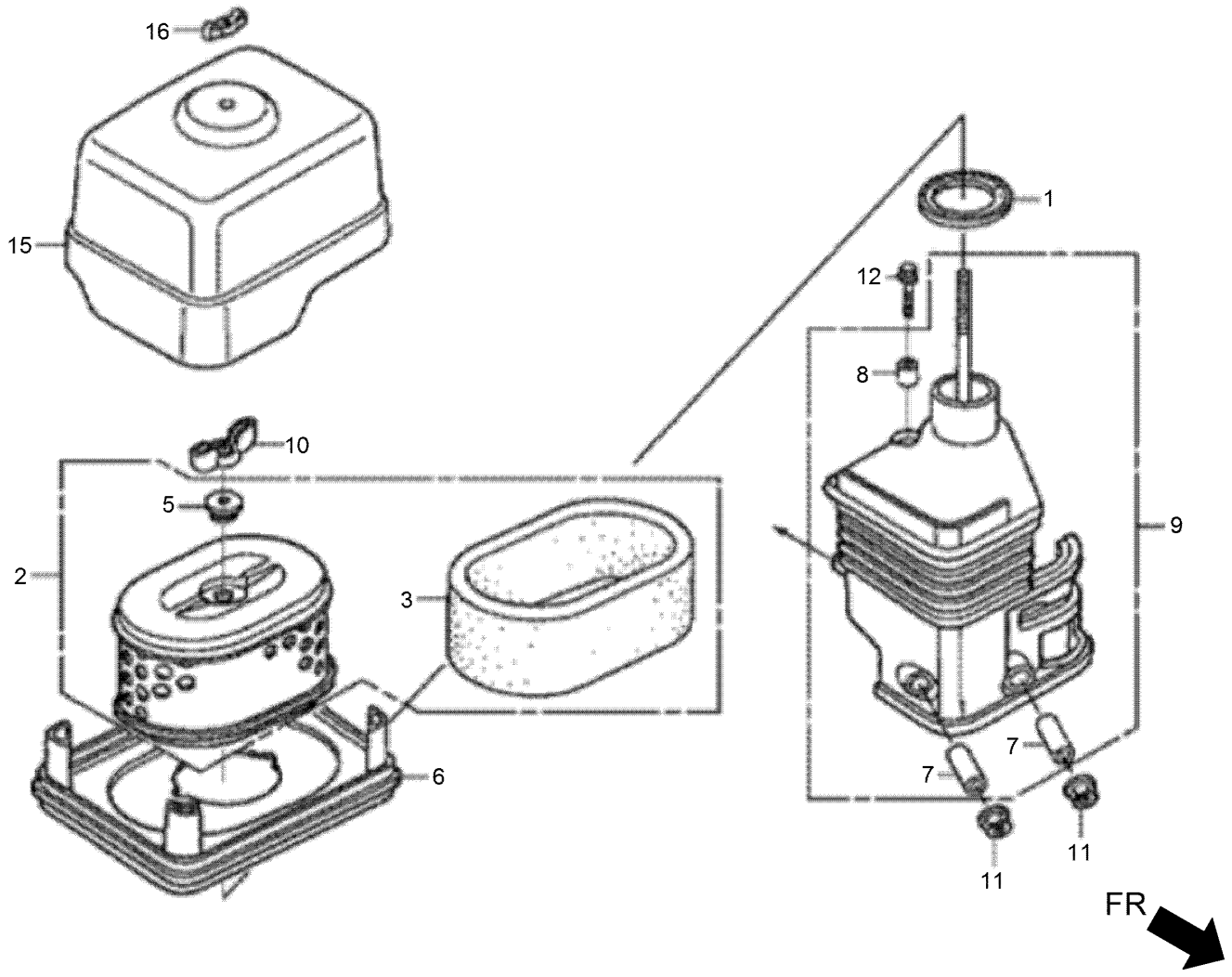

Air Cleaner Assembly (continued)

Ref.	Part Number	Qty.	Description
1	132-0291	1	Packing-Elbow
2	138-9146	1	Element, Air Cleaner (Dual)
3	132-0372	1	Filter-Outer
5	132-0391	1	Grommet-Air Cleaner
6	132-0392	1	Nose-Silencer
7	132-0393	2	Collar-Air Cleaner
8	132-0394	1	Collar B-Air Cleaner
9	132-0396	1	Elbow Comp-Air Cleaner
10	132-0631	1	Nut-Tool Box Setting
11	132-4881	2	Nut-Flange-6Mm
12	131-8224	1	Bolt-Flange-6X20
15	132-0388	1	Cover-Air Cleaner
16	138-9147	1	Nut, Air Cleaner

Muffler Assembly

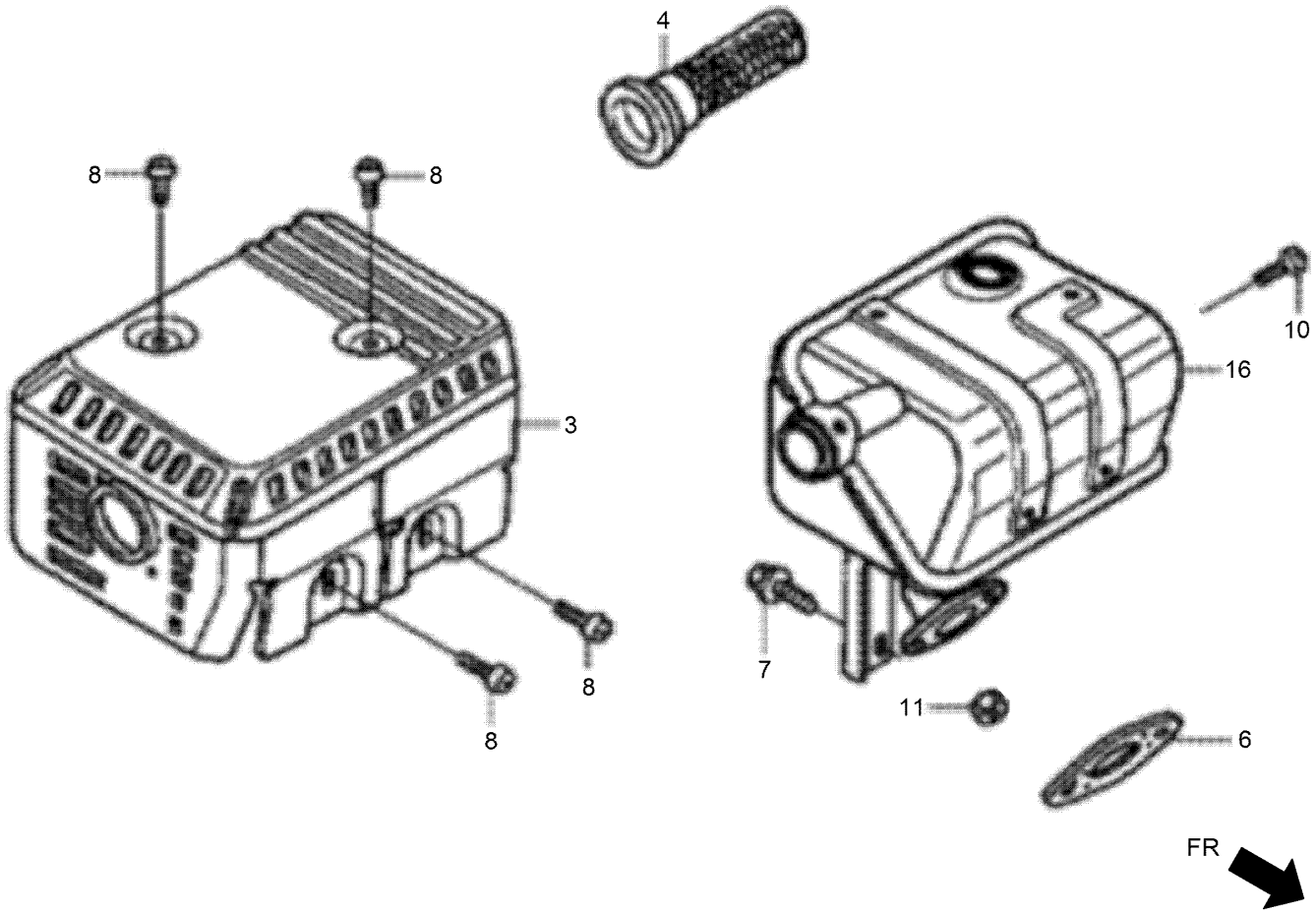

Muffler Assembly (continued)

Ref.	Part Number	Qty.	Description
3	132-0453	1	Muffler Protector ASM
4	132-0456	1	Arrester-Spark
6	132-0457	1	Gasket-Muffler
7	132-0600	1	Bolt-Flange-6X13
8	132-0616	4	Screw-Tapping-5X8
10	132-0617	1	Screw-Tapping-4X6
11	132-0684	2	Nut-Hex-8Mm
16	132-0446	1	Muffler ASM

Fuel Tank Assembly

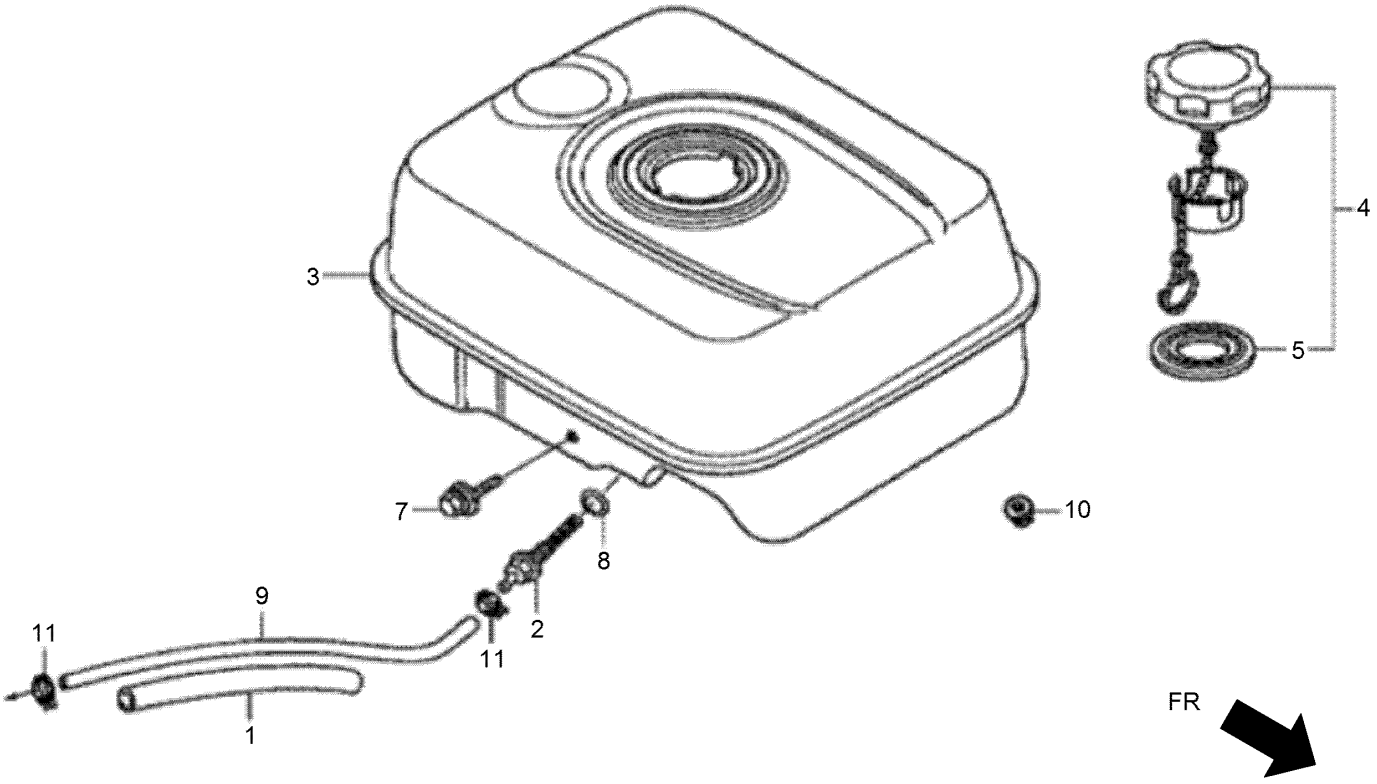

Fuel Tank Assembly (continued)

Ref.	Part Number	Qty.	Description
1	132-0349	1	Rubber-Supporter
2	132-0361	1	Joint-Fuel Tank
3	132-0397	1	Fuel Tank ASM (Nh31)
4	132-0414	1	Fuel Filler Cap ASM
5	132-0431	1	Packing-Fuel Filler Cap
7	132-0583	1	Bolt-Flange-6X34
8	132-0668	1	O-Ring-14Mm
9	132-0669	1	Tube-Fuel-4.5X145
10	132-4881	2	Nut-Flange-6Mm
11	131-8211	2	Clamp-Tube

Flywheel Assembly

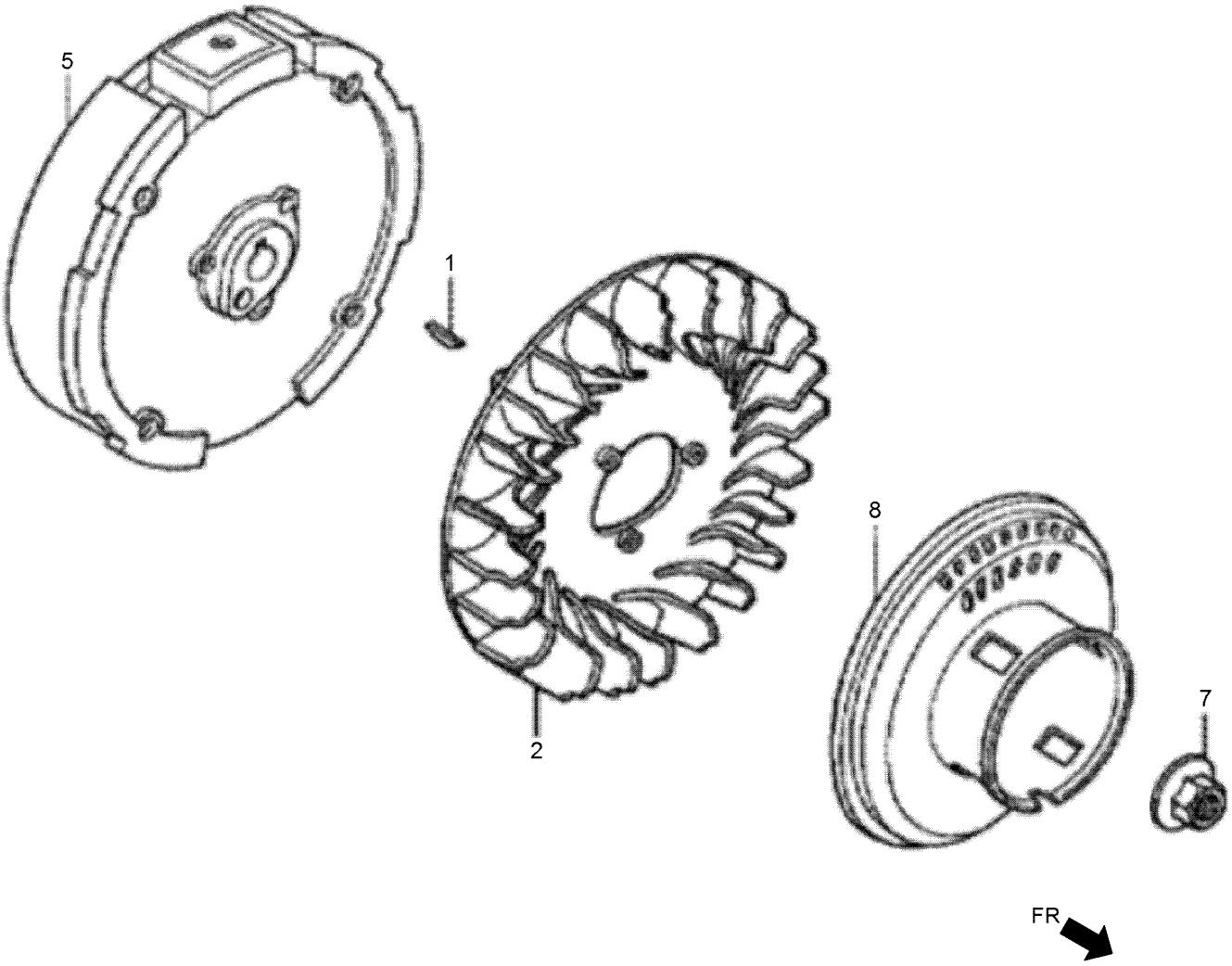

Flywheel Assembly (continued)

Ref.	Part Number	Qty.	Description
1	132-0167	1	Key-Special Woodruff-25X18
2	132-0461	1	Fan-Cooling
5	132-0519	1	Flywheel ASM
7	132-0625	1	Nut-Special-14Mm
8	138-9148	1	Pulley-Starter

Ignition Coil Assembly

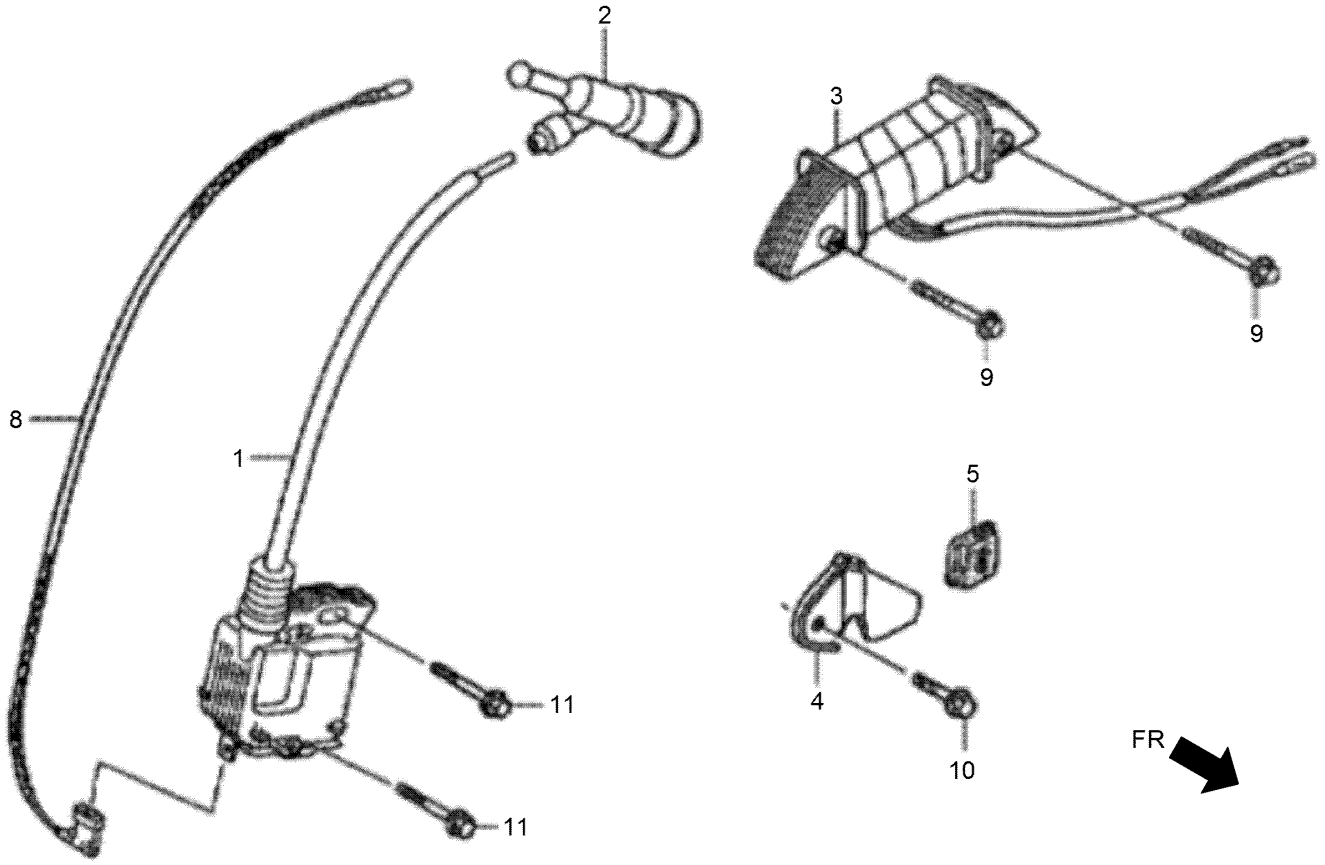

Ignition Coil Assembly (continued)

Ref.	Part Number	Qty.	Description
1	138-9149	1	Coil ASM-Ignition (Tec)
2	132-0515	1	Cap ASM-Noise Suppressor
3	132-0521	1	Coil ASM-Lamp
4	132-0522	1	Clamper-Cord
5	132-0523	1	Grommet-Cord
8	140-0250	1	Cord, Stop Switch (370Mm)
9	132-0596	2	Bolt-Flange-6X28
10	132-0604	1	Bolt-Flange-5X10
11	132-0620	2	Bolt-Flange-6X25

Control Assembly

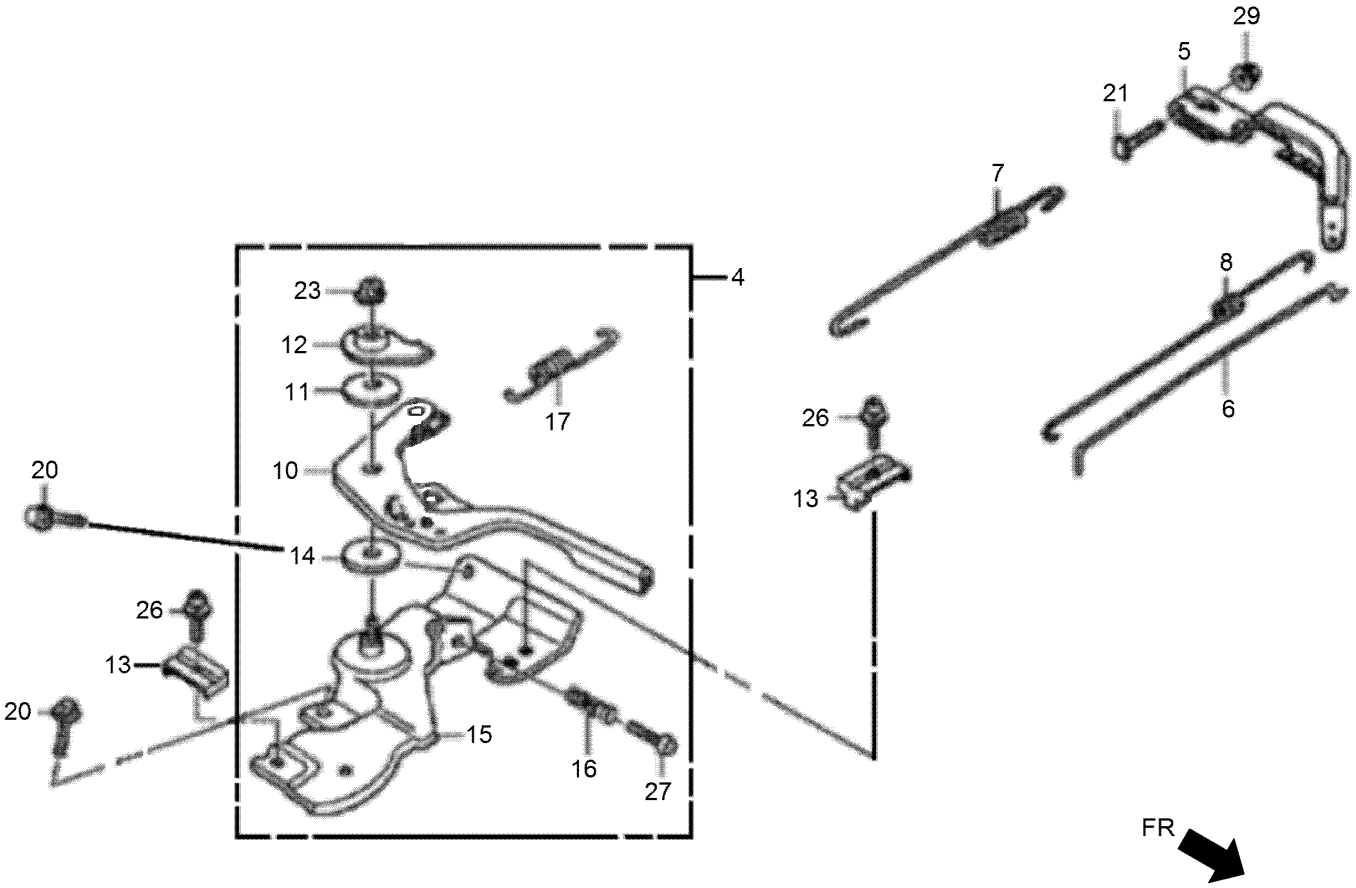

Control Assembly (continued)

Ref.	Part Number	Qty.	Description
4	132-0292	1	Control ASM
5	132-0311	1	Arm-Governor
6	132-0316	1	Rod-Governor
7	132-0320	1	Spring-Governor
8	132-0324	1	Spring-Throttle Return
10	132-0328	1	Lever-Control
11	132-0329	1	Spring-Lever
12	132-0330	1	Washer-Control Lever
13	132-0331	1	Holder-Cable
14	132-0332	1	Spacer-Control Lever
15	132-0337	1	Control Base ASM
16	132-0340	1	Spring-Control Adjusting
17	132-0341	1	Spring-Cable Return
20	132-4880	2	Bolt-Flange-6X12
21	132-0597	1	Bolt-Governor Arm
23	132-0619	1	Nut-Self-Lock-6Mm
26	132-0678	1	Screw-Pan-5X16
27	132-0679	1	Screw-Pan-5X25
29	132-4881	1	Nut-Flange-6Mm

Label Assembly

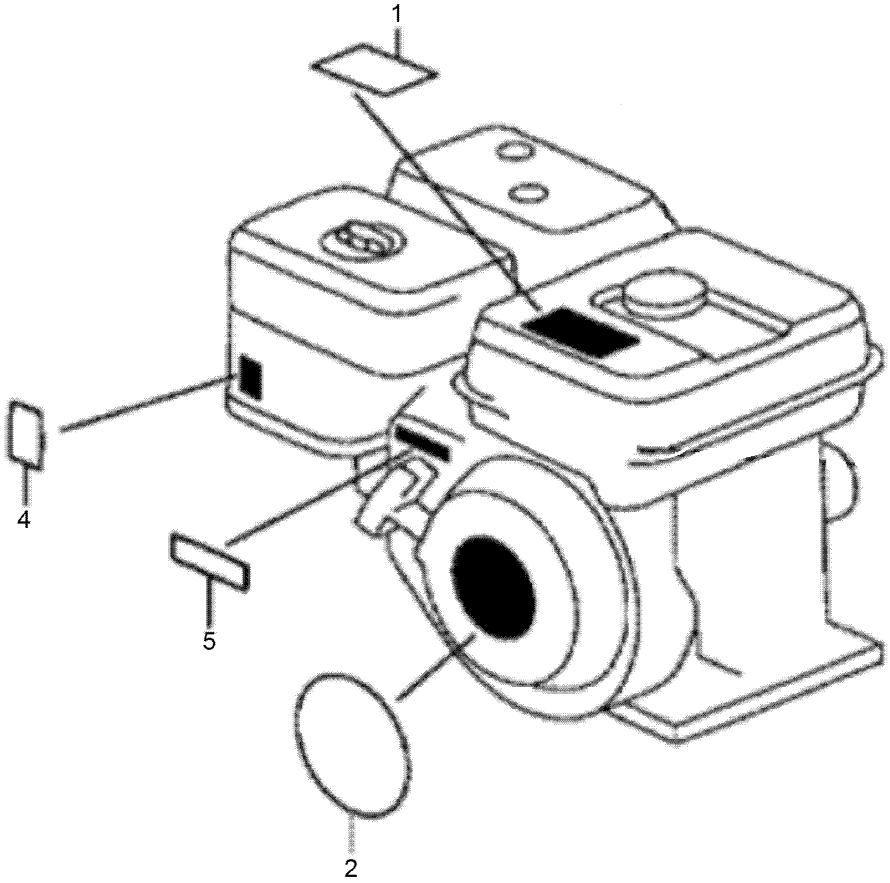

Label Assembly (continued)

Ref.	Part Number	Qty.	Description
1	132-0559	1	Mark-Operator Caution
2	132-0561	1	Emblem
4	132-0566	1	Mark-Choke
5	132-0567	1	Mark-Throttle Indication

Wrench

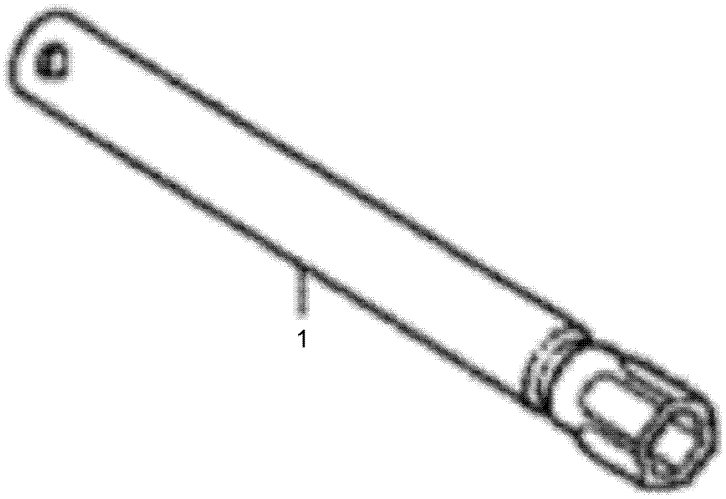

Wrench (continued)

Ref.	Part Number	Qty.	Description
1	132-0572	1	Wrench-Spark Plug

Decal Assembly

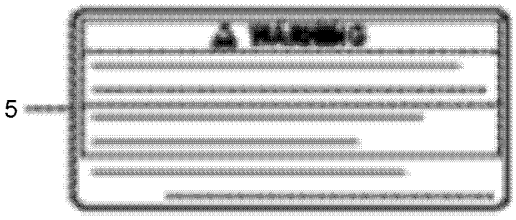

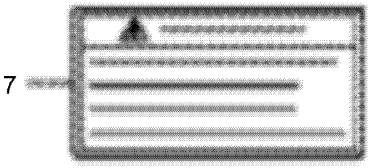

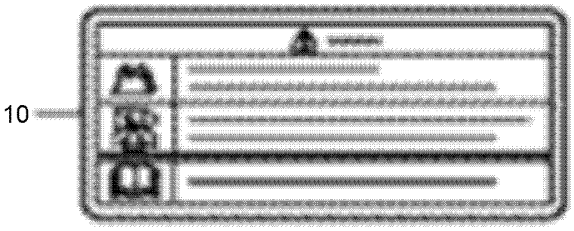

Decal Assembly (continued)

Ref.	Part Number	Qty.	Description
5	132-0552	1	Mark-Operator Caution (English)
5	132-0553	1	Mark-Operator Caution (French)
7	132-0570	1	Mark-Exhaust Caution (English)
7	132-0571	1	Mark-Exhaust Caution (French)
10	132-0557	1	Mark-Operator Caution (Chinese)

Gasket Kit

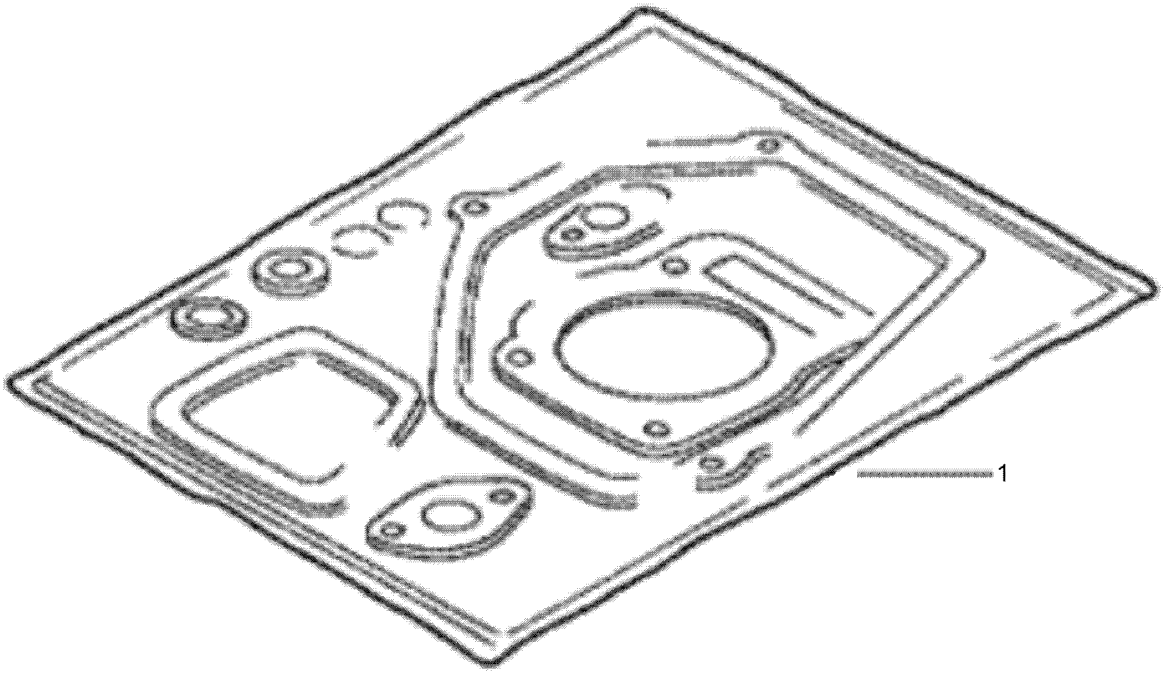

Gasket Kit (continued)

Ref.	Part Number	Qty.	Description
1	132-0100	1	Gasket Kit

Attachments and Accessories

For 44913 GreensPro 1260 Greens Roller

Product Name	Model/Part
Filter-Oil, Hyd	1-633750
Premium All Season Hydraulic Fluid (5 Gallon Pail)	108-1178
Premium Engine Oil 10w30 (5 Gallon Pail)	121-6393
Roller Scraper Kit	44911
Wireless Hour Meter Kit	44927

Notes:

TORO®

Count on it.