Form No. 3444-525 Rev B

TORO®

Count on it.

Operator's Manual

Workman® HDX Utility Vehicle

Model No. 07383—Serial No. 409100000 and Up
Model No. 07384—Serial No. 409100000 and Up
Model No. 07386—Serial No. 409100000 and Up

Register at www.Toro.com.
Original Instructions (EN)

3444-525

It is a violation of California Public Resource Code Section 4442 or 4443 to use or operate the engine on any forest-covered, brush-covered, or grass-covered land unless the engine is equipped with a spark arrester, as defined in Section 4442, maintained in effective working order or the engine is constructed, equipped, and maintained for the prevention of fire.

The enclosed engine owner's manual is supplied for information regarding the US Environmental Protection Agency (EPA) and the California Emission Control Regulation of emission systems, maintenance, and warranty. Replacements may be ordered through the engine manufacturer.

⚠ WARNING

CALIFORNIA
Proposition 65 Warning

The engine exhaust from this product contains chemicals known to the State of California to cause cancer, birth defects, or other reproductive harm.

Battery posts, terminals, and related accessories contain lead and lead compounds, chemicals known to the State of California to cause cancer and reproductive harm. Wash hands after handling.

Introduction

This utility vehicle is intended to be primarily used off-highway to transport people and material loads. Using this product for purposes other than its intended use could prove dangerous to you and bystanders.

Read this information carefully to learn how to operate and maintain your product properly and to avoid injury and product damage. You are responsible for operating the product properly and safely.

Visit www.Toro.com for product safety and operation training materials, accessory information, help finding a dealer, or to register your product.

Whenever you need service, genuine Toro parts, or additional information, contact an Authorized Service Distributor or Toro Customer Service and have the model and serial numbers of your product ready. Figure 1 identifies the location of the model and serial numbers on the product. Write the numbers in the space provided.

Important: **With your mobile device, you can scan the QR code on the serial number decal (if equipped) to access warranty, parts, and other product information.**

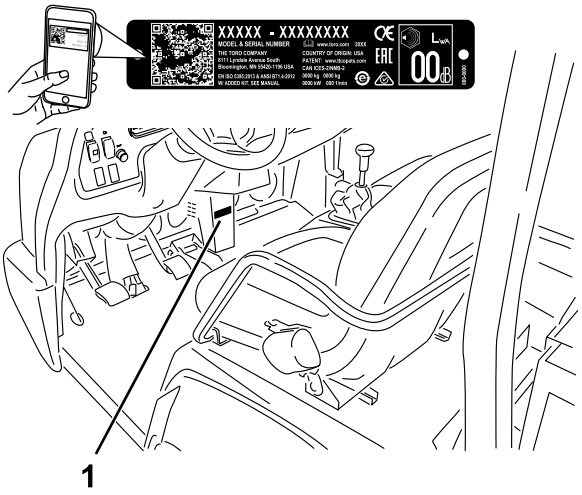

g239323

Figure 1

1. Model and serial number location

Model No. _____

Serial No. _____

This manual uses 2 words to highlight information. **Important** calls attention to special mechanical information and **Note** emphasizes general information worthy of special attention.

The safety-alert symbol (Figure 2) appears both in this manual and on the machine to identify important safety messages that you must follow to avoid accidents. This symbol will appear with the word **Danger**, **Warning**, or **Caution**.

- **Danger** indicates an imminently hazardous situation which, if not avoided, **will** result in death or serious injury.
- **Warning** indicates a potentially hazardous situation which, if not avoided, **could** result in death or serious injury.
- **Caution** indicates a potentially hazardous situation which, if not avoided, **may** result in minor or moderate injury.



g000502

Figure 2
Safety-alert symbol

© 2021—The Toro® Company
8111 Lyndale Avenue South
Bloomington, MN 55420

Contact us at www.Toro.com.
Printed in the USA
All Rights Reserved

Contents

Safety 4
General Safety 4
Safety and Instructional Decals 5
Setup 11
1 Installing the Roll Bar 11
2 Checking the Fluid Levels and Tire Pressure 12
3 Burnishing the Brakes 12
Product Overview 13
Controls 13
Specifications 19
Attachments/Accessories 19
Before Operation 20
Before Operation Safety 20
Performing Daily Maintenance 20
Checking the Tire Pressure 20
Adding Fuel 21
Breaking in a New Machine 21
Checking the Safety-Interlock System 22
During Operation 22
During Operation Safety 22
Operating the Cargo Bed 24
Starting the Engine 25
Engaging the 4-Wheel Drive 25
Driving the Machine 25
Stopping the Machine 26
Shutting Off the Engine 26
Using the Differential Lock 26
Using the Hydraulic Control 26
After Operation 28
After Operation Safety 28
Hauling the Machine 29
Towing the Machine 29
Towing a Trailer 29
Maintenance 30
Maintenance Safety 30
Recommended Maintenance Schedule(s) 31
Maintaining the Machine under Special Operating Conditions 33
Pre-Maintenance Procedures 33
Preparing the Machine for Maintenance 33
Using the Bed Support 33
Removing the Full Bed 34
Installing the Full Bed 35
Raising the Machine 36
Removing and Installing the Hood 36
Lubrication 37
Greasing the Bearings and Bushings 37
Engine Maintenance 39
Engine Safety 39
Servicing the Air Cleaner 39
Servicing the Engine Oil 40
Replacing the Spark Plugs 42
Fuel System Maintenance 42
Replacing the Fuel Filter 42
Inspecting Fuel Lines and Connections 43
Electrical System Maintenance 43
Electrical System Safety 43
Servicing the Fuses 43
Jump-Starting the Machine 44
Servicing the Battery 45
Drive System Maintenance 45
Checking the Front Differential-Oil Level 45
Changing the Front Differential Oil 46
Inspecting the Constant-Velocity Boot 46
Adjusting the Shift Cables 46
Adjusting the High-Low Cable 47
Adjusting Differential-Lock Cable 47
Inspecting the Tires 47
Checking the Front Wheel Alignment 48
Torquing the Wheel Lug Nuts 49
Cooling System Maintenance 49
Cooling System Safety 49
Checking the Engine-Coolant Level 49
Removing Debris from the Cooling System 50
Changing the Engine Coolant 51
Brake Maintenance 52
Checking the Brake-Fluid Level 52
Adjusting the Parking Brake 52
Adjusting the Brake Pedal 53
Belt Maintenance 54
Adjusting the Alternator Belt 54
Controls System Maintenance 55
Adjusting the Clutch Pedal 55
Adjusting the Accelerator Pedal 56
Hydraulic System Maintenance 56
Hydraulic System Safety 56
Servicing the Transaxle/Hydraulic System 56
Servicing the High-Flow Hydraulic System 59
Raising the Cargo Bed in an Emergency 60
Cleaning 62
Washing the Machine 62
Storage 63
Storage Safety 63
Storing the Machine 63
Troubleshooting 64

Safety

This machine has been designed in accordance with the requirements of SAE J2258 (Nov 2016).

General Safety

This product is capable of causing personal injury. Always follow all safety instructions to avoid serious personal injury.

- Read and understand the contents of this *Operator's Manual* before you start the machine. Ensure that everyone using this product knows how to use it and understands the warnings.
- Use your full attention while operating the machine. Do not engage in any activity that causes distractions; otherwise, injury or property damage may occur.
- Do not put your hands or feet near moving components of the machine.
- Do not operate the machine without all guards and other safety protective devices in place and working on the machine.
- Keep bystanders and children out of the operating area. Never allow children to operate the machine.
- Stop and shut off the machine and remove the key before servicing or fueling.

Improperly using or maintaining this machine can result in injury. To reduce the potential for injury, comply with these safety instructions and always pay attention to the safety-alert symbol ⚠, which means Caution, Warning, or Danger—personal safety instruction. Failure to comply with these instructions may result in personal injury or death.

Safety and Instructional Decals

Safety decals and instructions are easily visible to the operator and are located near any area of potential danger. Replace any decal that is damaged or missing.



decalbatterysymbols

Battery Symbols

Some or all of these symbols are on your battery.

1. Explosion hazard
2. No fire, open flame, or smoking
3. Caustic liquid/chemical burn hazard
4. Wear eye protection.
5. Read the *Operator's Manual*.
6. Keep bystanders away from the battery.
7. Wear eye protection; explosive gases can cause blindness and other injuries.
8. Battery acid can cause blindness or severe burns.
9. Flush eyes immediately with water and get medical help fast.
10. Contains lead; do not discard

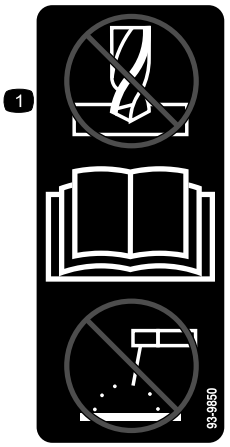

decal93-9850

93-9850

1. Do not repair or revise—read the *Operator's Manual.*



decal93-9852

93-9852

1. Warning—read the *Operator's Manual.*
2. Crushing hazard—install the cylinder lock.

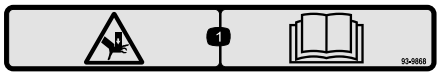

decal93-9868

93–9868

1. Crushing hazard of hand—read the *Operator's Manual*.

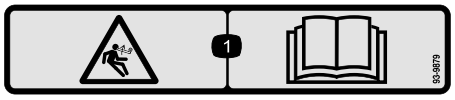

decal93-9879

93-9879

1. Stored energy hazard—read the *Operator's Manual.*



decal93-9899

93-9899

1. Crushing hazard—install the cylinder lock.

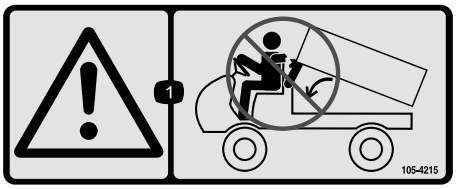

decal105-4215

105-4215

1. Warning—avoid pinch points.

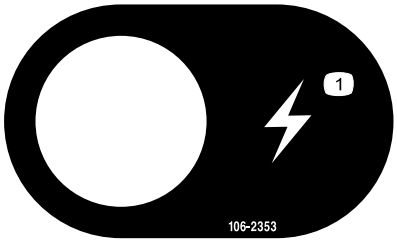

decal106-2353

106-2353

1. Electrical power point

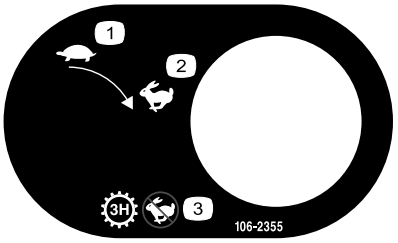

decal106-2355

106-2355

1. Slow
2. Fast
3. Transmission—third high; no fast speed

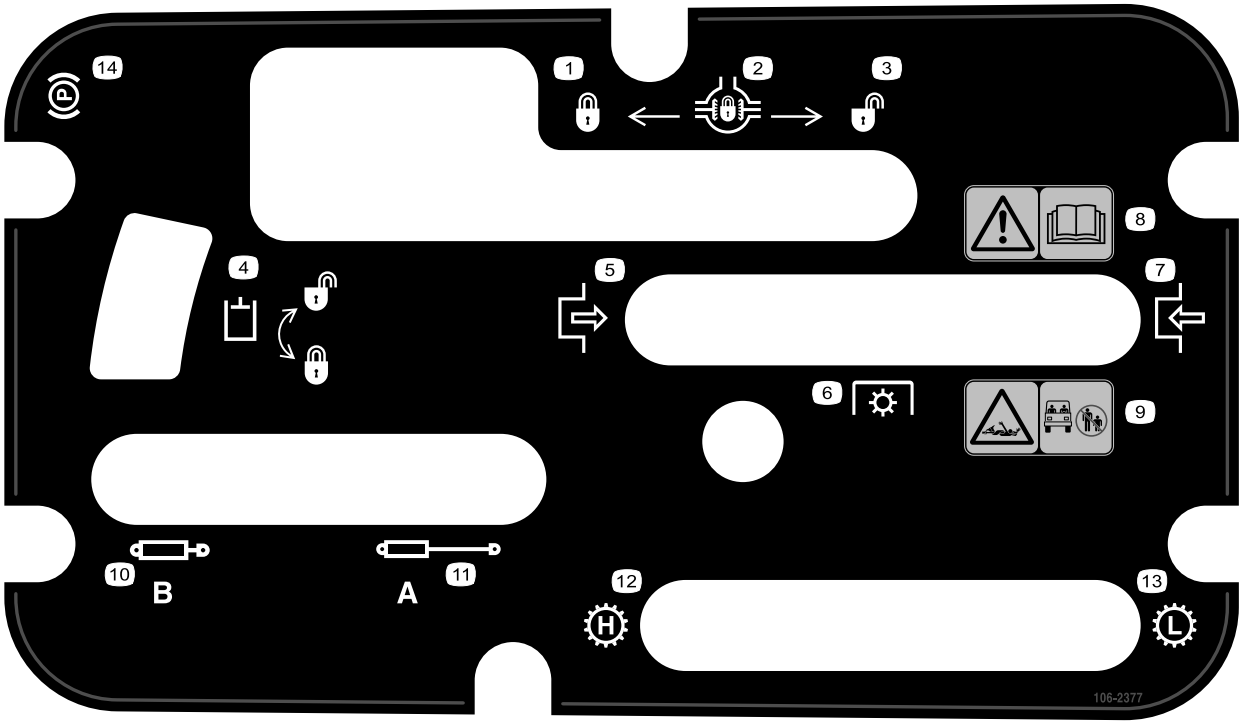

decal106-2377

106-2377

1. Locked
2. Differential lock
3. Unlocked
4. Hydraulic lock
5. Engage
6. Power takeoff (PTO)
7. Disengage
8. Warning—read the *Operator's Manual.*
9. Entanglement hazard, shaft—keep bystanders out of the operating area.
10. Retract hydraulics
11. Extend hydraulics
12. Transmission—high speed
13. Transmission—low speed
14. Parking brake

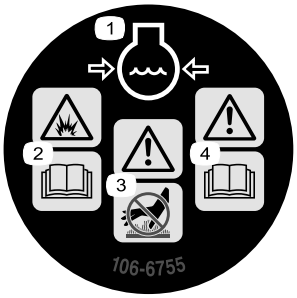

decal106-6755

106-6755

1. Engine coolant under pressure.
2. Explosion hazard—read the *Operator's Manual.*
3. Warning—do not touch the hot surface.
4. Warning—read the *Operator's Manual.*



decal106-7767

106-7767

1. Warning—read the *Operator's Manual*; avoid tipping the machine; wear the seat belt; lean away from the direction the machine is tipping.

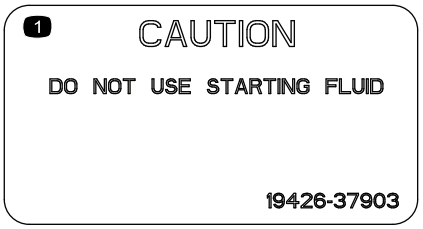

decal110-0806

110-0806

1. Caution—do not use starting fluid

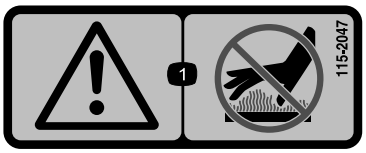

decal115-2047

115-2047

1. Warning—do not touch the hot surface.

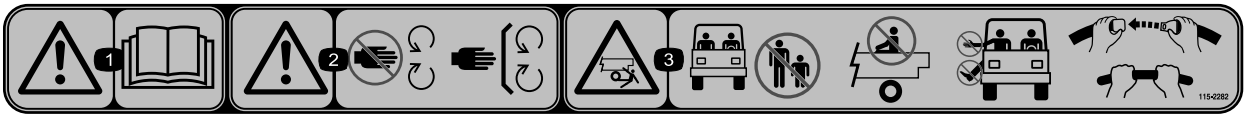

decal115-2282

115-2282

1. Warning—read the *Operator's Manual*.
2. Warning—stay away from moving parts; keep all guards and shields in place.
3. Crushing hazard—keep bystanders out of the operating area; do not carry passengers in the cargo bed; keep arms and legs inside of the vehicle at all times; use seat belts and handholds.

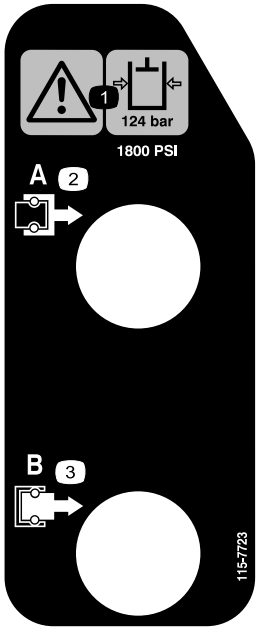

decal115-7723

115-7723

1. Warning—the hydraulic-fluid pressure is 124 bar (1,800 psi).
2. Coupler A
3. Coupler B

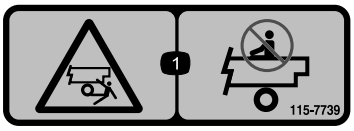

decal115-7739

115-7739

1. Falling, crushing hazard—do not carry passengers.

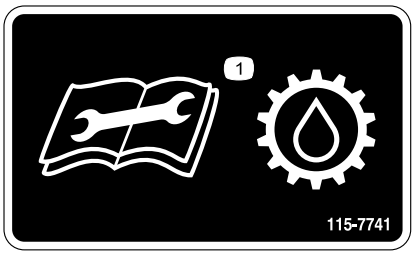

decal115-7741

115-7741

1. Read the *Operator's Manual* before servicing transmission fluid.

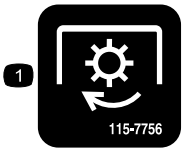

decal115-7756

115-7756

1. High-flow hydraulics—engaged

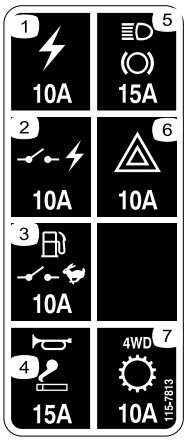

decal115-7813

115-7813

1. Power outlet (10 A)
2. Switched power (10 A)
3. Fuel pump, supervisor switch (10 A)
4. Horn, power point (15 A)
5. Lights, brake (15 A)
6. Hazard (10 A)
7. 4WD, Transmission (10 A)

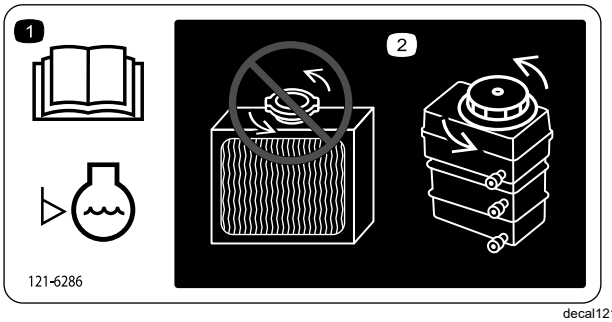

decal121-6286

121-6286

1. Check the coolant level daily before use of the machine. Read the *Operator's Manual* before checking the engine-coolant level.
2. Do not open or add coolant to the radiator; doing so introduces air into the system and results in engine damage. Add only engine coolant to the reservoir.

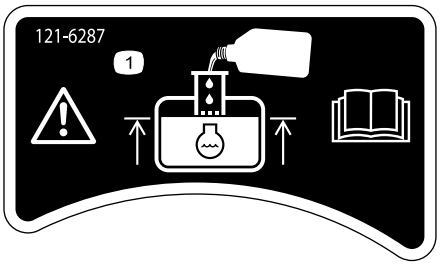

decal121-6287

121-6287

1. Fill the reservoir with engine coolant to the bottom of the filler neck.

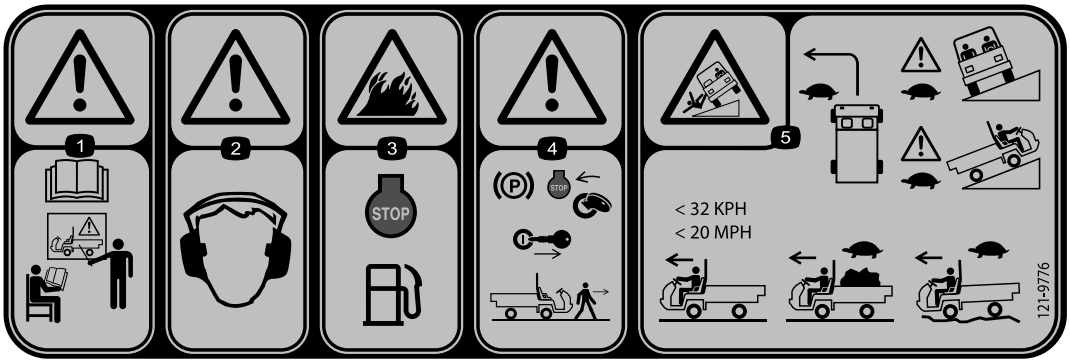

decal121-9776

121-9776

1. Warning—read the *Operator's Manual* and receive proper training before operating the machine.
2. Warning—wear hearing protection.
3. Fire hazard—shut off the engine before refueling the machine.
4. Warning—engage the parking brake, shut off the engine, and remove the key from the key switch before walking away from the machine.
5. Tipping hazard—take turns slowly; drive slowly up and across cliffs; with no load, do not exceed 32 kph (20 mph); while carrying a load or when driving on uneven terrain, drive slowly.

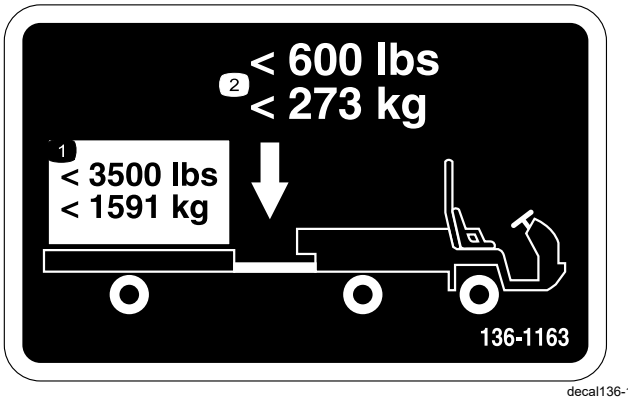

decal136-1163

136-1163

1. Do not exceed a transport load of 1591 kg (3,500 lb).
2. Do not exceed a tongue weight of 273 kg (600 lb).



decal137-9895

137-9895

1. 4x4 auto enable—off

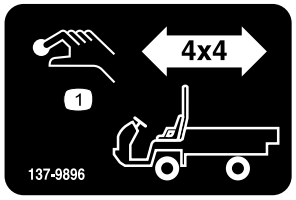

decal137-9896

137-9896

1. 4x4 engage button

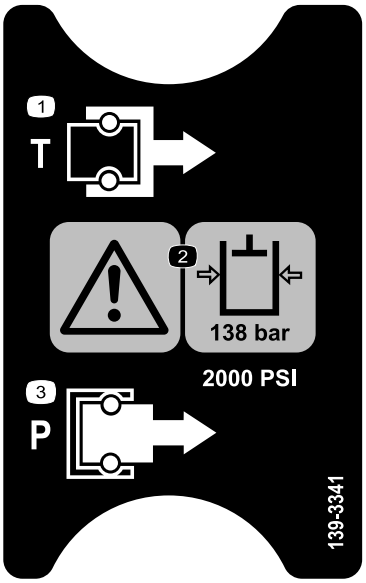

decal139-3341

139-3341

1. Tank
2. Warning—the hydraulic-fluid pressure is 138 bar (2,000 psi).
3. Pressure

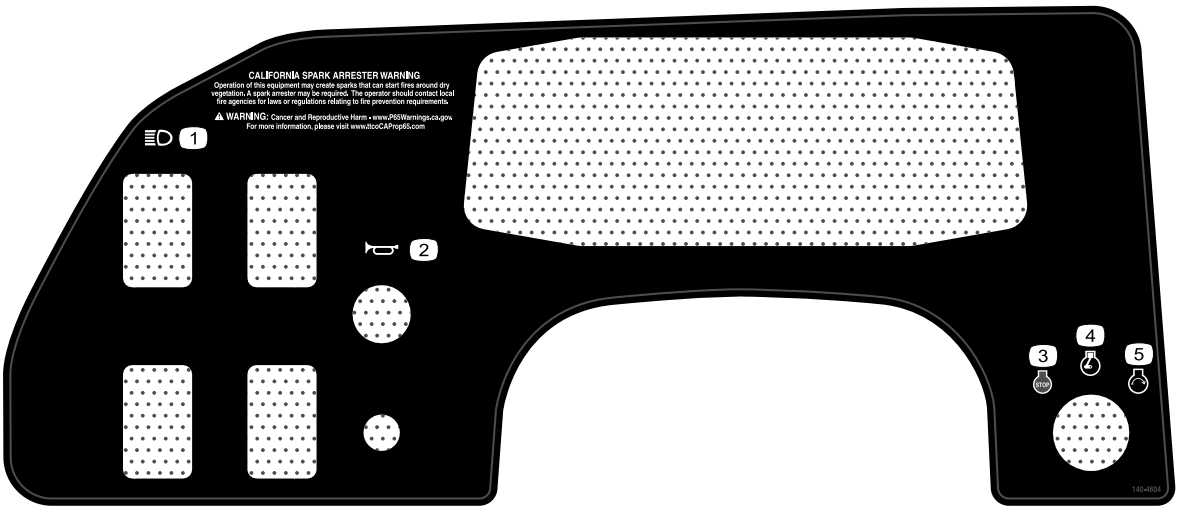

decal140-4604

140-4604

1. Headlights
2. Horn
3. Engine—stop
4. Engine—run
5. Engine—start

Setup

Loose Parts

Use the chart below to verify that all parts have been shipped.

Procedure	Description	Qty.	Use
1	Roll bar Flange-head bolt (1/2 x 1-1/4 inches)	1 6	Install the roll bar.
2	No parts required	–	Check the fluid levels and tire pressure.
3	No parts required	–	Burnish the brakes.

Note: Determine the left and right sides of the machine from the normal operating position.

1

Installing the Roll Bar

Parts needed for this procedure:

1	Roll bar
6	Flange-head bolt (1/2 x 1-1/4 inches)

Procedure

1. Apply medium-grade (service-removable) thread-locking compound to the threads of the 6 flange-head bolts (1/2 x 1-1/4 inches).
2. Align each side of the roll bar with the mounting holes on each side of the machine frame (Figure 3).

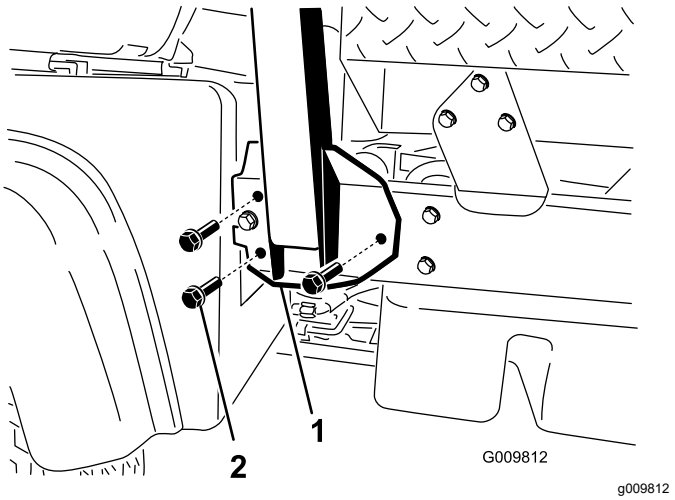

Figure 3

1. Roll bar mounting bracket
2. Flange-head bolt (1/2 x 1-1/4 inches)

3. Secure the roll bar mounting bracket to the machine frame using 3 flange-head bolts (1/2 x 1-1/4 inches) on each side (Figure 3).
4. Torque the flange-head bolts (1/2 x 1-1/4 inches) to 115 N·m (85 ft-lb).

2

Checking the Fluid Levels and Tire Pressure

No Parts Required

Procedure

1. Check the engine-oil level before and after you first start the engine; refer to Checking the Engine-Oil Level (page 40).
2. Check the transaxle/hydraulic-fluid level before you first start the engine; refer to Checking the Transaxle/Hydraulic-Fluid Level (page 56).
3. Check the brake-fluid level before you first start the engine; refer to Checking the Brake-Fluid Level (page 52).
4. Check the coolant level; refer to Checking the Engine-Coolant Level (page 49).
5. Check the air pressure in the tires; refer to Checking the Tire Pressure (page 20).

3

Burnishing the Brakes

No Parts Required

Procedure

To ensure optimum performance of the brake system, burnish the brakes before use.

1. Bring the machine up to full speed, apply the brakes to rapidly stop the machine without locking up the tires.
2. Repeat this procedure 10 times, waiting 1 minute between stops, to avoid overheating the brakes.

   Important: **This procedure is most effective if the machine is loaded with 454 kg (1,000 lb).**

Product Overview

Controls

Become familiar with all the controls before you start the engine and operate the machine.

Control Panel

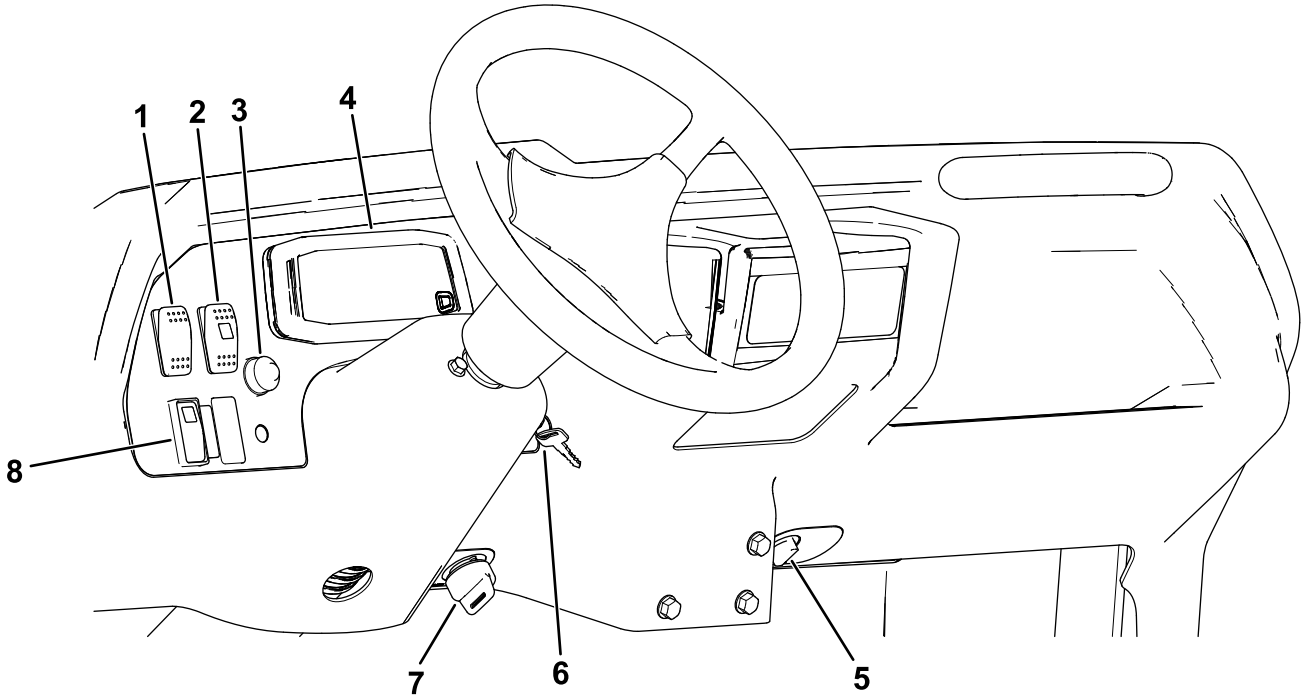

Figure 4

1. Light switch
2. High-flow hydraulics switch (TC models only)
3. Horn button
4. Display
5. Power point
6. Key switch
7. Supervisor switch
8. 4-wheel drive switch (4-wheel drive models only)

Display

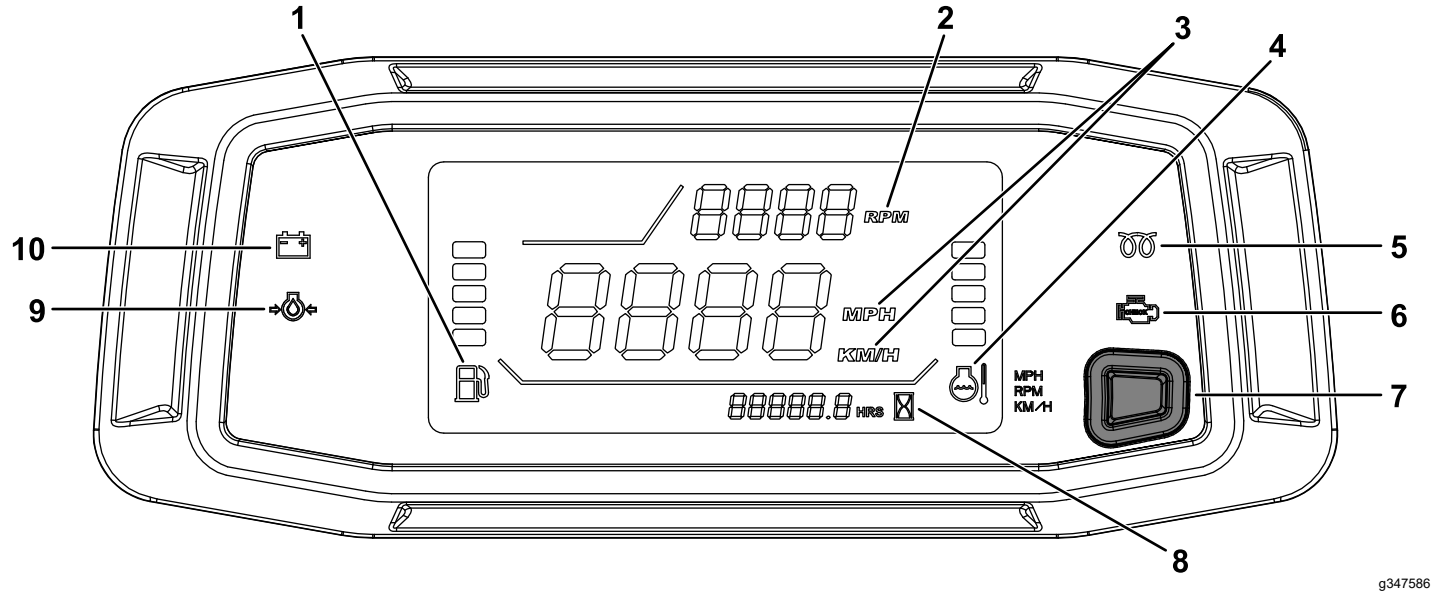

Figure 5

1. Fuel gauge
2. Tachometer/engine speed (rpm)
3. Speedometer (km/h or mph)
4. Coolant-temperature gauge and light
5. Glow-plug indicator (diesel machines only)
6. Check-engine indicator
7. Tachometer-speedometer location change button/Speedometer conversion button
8. Hour meter
9. Oil-pressure-warning light
10. Charge indicator

Accelerator Pedal

Use the accelerator pedal (Figure 6) to vary the ground speed of the machine when the transmission is in gear. Pressing down the accelerator pedal increases the engine speed and ground speed. Releasing the pedal decreases the engine speed and ground speed.

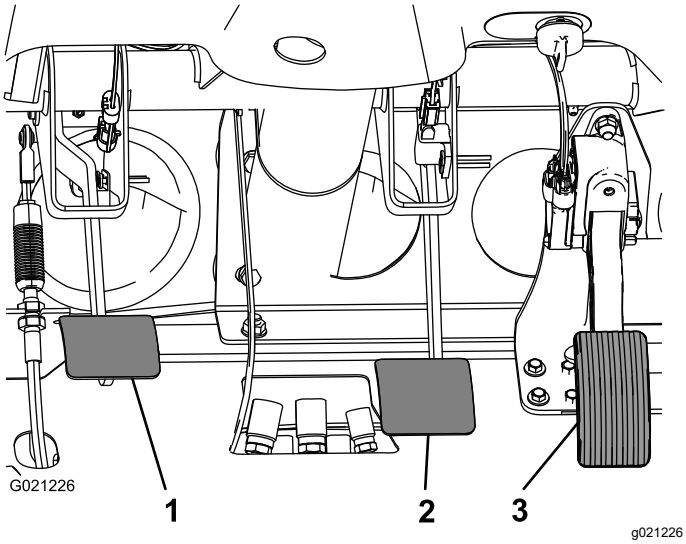

Figure 6

1. Clutch pedal
2. Brake pedal
3. Accelerator pedal

Clutch Pedal

You must fully press the clutch pedal (Figure 6) to disengage the clutch when starting the engine or shifting transmission gears. Release the pedal smoothly when the transmission is in gear to prevent unnecessary wear on the transmission and other related parts.

Important: **Do not ride the clutch pedal during operation. The clutch pedal must be fully out or the clutch slips, causing heat and wear. Never hold the machine stopped on a hill using the clutch pedal. Damage to the clutch may occur.**

Brake Pedal

Use the brake pedal to stop or slow the machine (Figure 6).

⚠ CAUTION

Operating a machine with worn or incorrectly adjusted brakes can may result in personal injury.

If the brake pedal travels to within 25 mm (1 inch) of the machine floor board, adjust or repair the brakes.

Gear-Shift Lever

Fully press the clutch pedal and move the shift lever (Figure 7) into the desired gear selection. A diagram of the shift pattern is shown below.

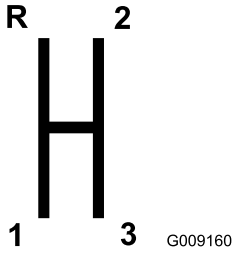

Figure 7

Important: **Do not shift the transaxle to the REVERSE or FORWARD gear unless the machine is motionless; otherwise, you could damage the transaxle.**

⚠ CAUTION

Down-shifting from too high a speed can cause the rear wheels to skid, resulting in loss of machine control as well as clutch and/or transmission damage.

Shift smoothly to avoid grinding the gears.

Differential Lock

The differential lock (Figure 8) allows the rear axle to lock for increased traction. You can engage the differential lock when the machine is in motion.

Move the lever forward and to the right to engage the lock.

Note: Machine motion plus a slight turn is required to engage or disengage the differential lock.

⚠ CAUTION

Turning with the differential lock on can result in the loss of machine control.

Do not operate the machine with the differential lock on when making sharp turns or at high speeds; refer to Adjusting Differential-Lock Cable (page 47).

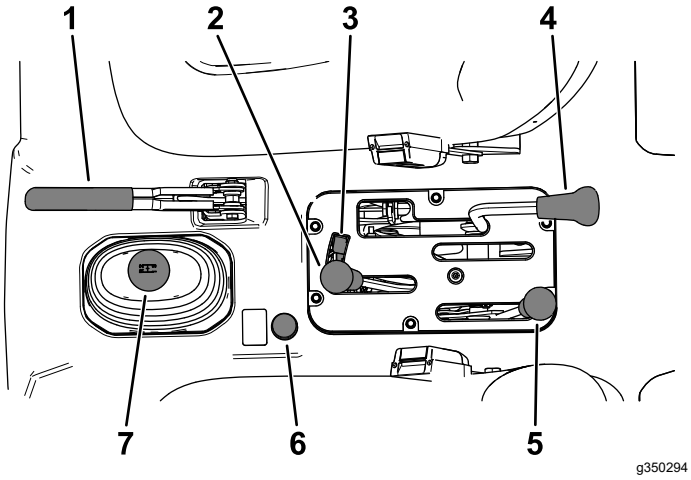

Figure 8

1. Parking-brake lever
2. Hydraulic-bed lift
3. Hydraulic-lift lock
4. Differential lock
5. High-low range shifter
6. 4-wheel drive button (4-wheel drive models only)
7. Gear-shift lever

Parking-Brake Lever

Whenever you shut off the engine, engage the parking brake (Figure 8) to prevent the machine from accidentally moving.

- To engage the parking brake, pull back on the parking-brake lever.
- To disengage the parking brake, push the parking-brake lever forward.

  Note: Disengage the parking brake before moving the machine.

If you park the machine on a steep grade, engage the parking brake, shift the transmission into FIRST gear on a uphill grade or REVERSE gear on a downhill grade, and place chocks at the downhill side of the wheels.

Hydraulic-Lift Lever

The hydraulic lift raises and lowers the bed. Move it rearward to raise the bed, and forward to lower it (Figure 8).

Important: **When lowering the bed, hold the lever in the forward position for 1 to 2 seconds after the bed contacts the frame to secure it in the lowered position. Do not hold the hydraulic lift in the raise or lower position for more than 5 seconds, once the cylinders reach the end of their travel.**

Hydraulic-Lift Lock

The hydraulic-lift lock secures the lift lever, so that the hydraulic cylinders do not operate when the machine is not equipped with a bed (Figure 8). It also locks the lift lever in the ON position when using the hydraulics for attachments.

High-Low Range Shifter

The high-low range shifter adds 3 additional speeds for precise speed control (Figure 8):

- You must stop the machine completely before shifting between the HIGH and LOW range.
- Shift on level ground only.
- Press the clutch pedal fully.
- Move the lever fully forward for HIGH and fully rearward for LOW.

HIGH range—For higher speed driving on level, dry surfaces with light loads.

LOW range—For low-speed driving. Use this range when greater than normal power or control is necessary. For example, steep grades, difficult terrain, heavy loads, slow speed but high-engine speed (spraying).

Important: **There is a location between HIGH and LOW in which the transaxle is in neither range. Do not use this position as a NEUTRAL position, because the machine could move unexpectedly if the High-Low shifter is bumped and the gear-shift lever is in gear.**

4-Wheel Drive Button

4-Wheel Drive Models Only

To engage the 4-wheel drive manually, press and hold the 4WD button (Figure 8) on the center console while the vehicle is in motion and the 4-wheel drive engages.

Key Switch

Use the key switch (Figure 4) to start and shut off the engine.

The key switch has 3 positions: OFF, ON, and START. Rotate the key switch clockwise to the START position to engage the starter motor. Release the key switch when the engine starts. The key switch moves automatically to the ON position.

To shut the engine off, rotate the key switch counterclockwise to the OFF position.

Supervisor Switch

Move the supervisor switch (Figure 4) to the SLOW position and remove the key. The supervisor switch limits the engine speed to 2,200 rpm when the machine is in third gear in the HIGH range, which limits the top speed to 21 km/h (13 mph).

Hour Meter

The hour meter indicates the total hours of machine operation. The hour meter (Figure 5) starts to function whenever you rotate the key switch to the ON position or if the engine is running.

Light Switch

Push the light switch (Figure 4) to toggle the headlights on or off.

Oil-Pressure-Warning Light

The oil-pressure-warning light (Figure 5) illuminates if the engine-oil pressure drops below a safe level while the engine is running.

Important: **If the light flickers or remains on, stop the machine, shut off the engine, and check the oil level. If the oil level is low, but adding oil does not cause the light to go out when the engine is started, shut off the engine immediately, and contact your Authorized Service Dealer for assistance.**

Check the operation of the warning lights as follows:

1. Engage the parking brake.
2. Turn the key switch to the ON/PREHEAT position, but do not start the engine.

   Note: The oil-pressure light should glow red. If the light does not function, either a bulb is burned out or there is a malfunction in the system that you must repair.

   Note: If engine was just shut off, it may take 1 to 2 minutes for the light to come on.

Coolant-Temperature Gauge and Light

The coolant-temperature gauge and light registers the coolant temperature in the engine and operates only when the key switch is in ON position (Figure 5).

The 5 coolant bars blink if the engine overheats.

Charge Indicator

The charge indicator illuminates when the battery discharges. If the light illuminates during operation, stop the machine, shut off the engine, and check for possible causes, such as the alternator belt (Figure 5).

Important: **If the alternator belt is loose or broken, do not operate the machine until the adjustment or repair is complete. Failure to observe this precaution may damage the engine.**

Check the operation of the warning lights as follows:

- Engage the parking brake.
- Turn the key switch to the ON/PREHEAT position, but do not start the engine. The coolant temperature, charge indicator, and oil-pressure lights should glow. If any light does not function, either a bulb is burned out or there is a malfunction in the system that you must repair.

Fuel Gauge

The fuel gauge shows the amount of fuel in the tank. It displays only when key switch is in the ON position (Figure 5).

A single bar indicates a low fuel level and 1 flashing bar indicates that the fuel tank is nearly empty.

4-Wheel Drive Switch

4-Wheel Drive Models Only

When the 4WD switch (Figure 4) is on, the machine automatically engages the 4-wheel drive if the sensor detects the back wheels spinning freely. When the 4-wheel drive is engaged, the 4WD switch light turns on.

4WD works only in the forward direction in AUTO mode. If you want it in REVERSE, press the 4WD button.

High-Flow Hydraulics Switch

TC Models Only

Turn on the switch to activate the high-flow hydraulics (Figure 4).

Horn Button

The horn button is located on the control panel (Figure 4). Press the horn button to sound the horn.

Tachometer

The tachometer displays the speed of the engine (Figure 5).

Note: 3,300 rpm is the desired engine speed for 540 rpm PTO operation.

Check-Engine Light

The check-engine light illuminates to indicate an engine malfunction; refer to Responding to a Check-Engine Light (page 41).

Speedometer

The speedometer registers the ground speed of the machine (Figure 5).

Tachometer-Speedometer Location Change Button/Speedometer Conversion Button

Press, hold, and release the button (Figure 5) between 0 to 3 seconds to swap the locations of tachometer and speedometer.

Press, hold, and release the button (Figure 5) between 3 to 10 seconds to convert the speedometer from mph to km/h.

Power Point

Use the power point (Figure 4) to power optional 12 V electrical accessories.

Passenger Handhold

The passenger handhold is located on the dashboard (Figure 9).

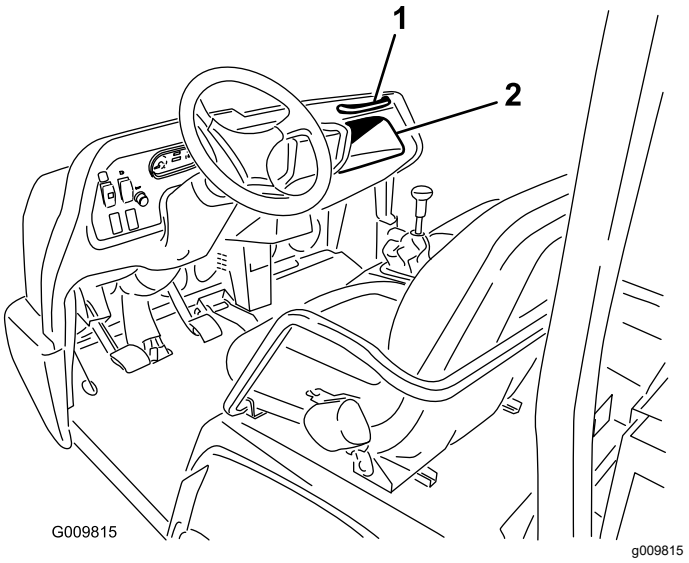

Figure 9

1. Passenger handhold
2. Storage compartment

Seat-Adjustment Lever

You can adjust the seat forward and rearward for your comfort (Figure 10).

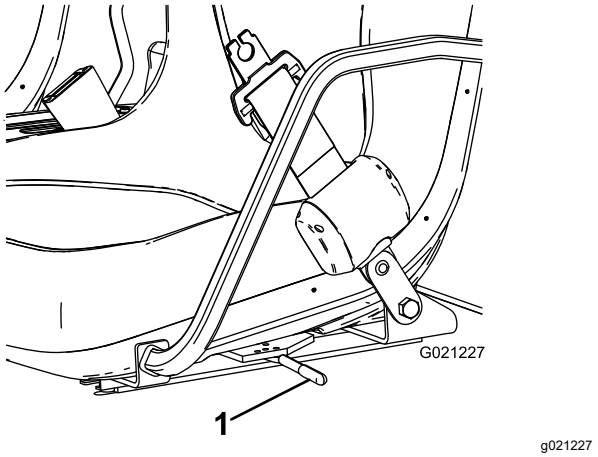

Figure 10

1. Seat-adjustment lever

Specifications

Note: Specifications and design are subject to change without notice.

Overall width	160 cm (63 inches)
Overall length	Without bed: 326 cm (128 inches) With full bed: 331 cm (130 inches) With 2/3 bed in rear-mounting location: 346 cm (136 inches)
Base weight (dry)	Model 07383: 736 kg (1,623 lb) Model 07384: 885 kg (1,951 lb) Model 07386: 912 kg (2,010 lb)
Rated capacity (includes 91 kg (200 lb) operator, 91 kg (200 lb) passenger, and loaded attachment)	Model 07383: 1623 kg (3,577 lb) Model 07384: 1474 kg (3,249 lb) Model 07386: 1447 kg (3,190 lb)
Maximum gross vehicle weight (GVW)	2359 kg (5,200 lb)
Tow capacity	Tongue weight: 272 kg (600 lb) Maximum trailer weight: 1587 kg (3,500 lb)
Ground clearance	18 cm (7 inches) with no load
Wheel base	118 cm (70 inches)
Wheel tread (center line to center line)	Front: 117 cm (46 inches) Rear: 121 cm (48 inches)
Height	191 cm (75 inches) to top of ROPS

Attachments/Accessories

A selection of Toro approved attachments and accessories is available for use with the machine to enhance and expand its capabilities. Contact your Authorized Service Dealer or Distributor or go to www.Toro.com for a list of all approved attachments and accessories.

To ensure optimum performance and continued safety certification of the machine, use only genuine Toro replacement parts and accessories. Replacement parts and accessories made by other manufacturers could be dangerous, and such use could void the product warranty.

Operation

Note: Determine the left and right sides of the machine from the normal operating position.

Before Operation

Before Operation Safety

General Safety

- Never allow children or people who are not trained or physically capable to safely operate or service the machine. Local regulations may restrict the age of the operator. The owner is responsible for training all operators and mechanics.
- Become familiar with the safe operation of the equipment, operator controls, and safety signs.
- Shut off the machine, remove the key, and wait for all movement to stop before you leave the operator's position. Allow the machine to cool before adjusting, servicing, cleaning, or storing it.
- Know how to stop and shut off the machine quickly.
- Ensure that there are not more occupants (you and your passenger(s)) than the number of handholds equipped on the machine.
- Check that all safety devices and decals are in place. Repair or replace all safety devices and replace all illegible or missing decals. Do not operate the machine unless they are present and functioning properly.

Fuel Safety

- Use extreme care in handling fuel. It is flammable and its vapors are explosive.
- Extinguish all cigarettes, cigars, pipes, and other sources of ignition.
- Use only an approved fuel container.
- Do not remove the fuel cap or fill the fuel tank while the engine is running or hot.
- Do not add or drain fuel in an enclosed space.
- Do not store the machine or fuel container where there is an open flame, spark, or pilot light, such as on a water heater or other appliance.
- If you spill fuel, do not attempt to start the engine; avoid creating any source of ignition until the fuel vapors have dissipated.

Performing Daily Maintenance

Service Interval: Before each use or daily

Before starting the machine each day, perform the Each Use/Daily procedures listed in Maintenance (page 30).

Checking the Tire Pressure

Service Interval: Before each use or daily

Front tires air pressure specification: 220 kPa (32 psi)

Rear tires air pressure specification: 124 kPa (18 psi)

Important: **Check the tire pressure frequently to ensure proper inflation. If the tires are not inflated to the correct pressure, the tires will wear prematurely and may cause the 4-wheel drive to bind.**

Figure 11 shows an example of tire wear caused by under-inflation.

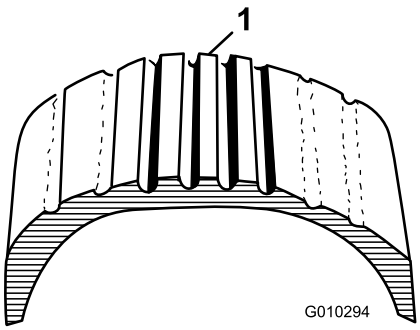

g010294

Figure 11

1. Under-inflated tire

Figure 12 shows an example of tire wear caused by over-inflation.

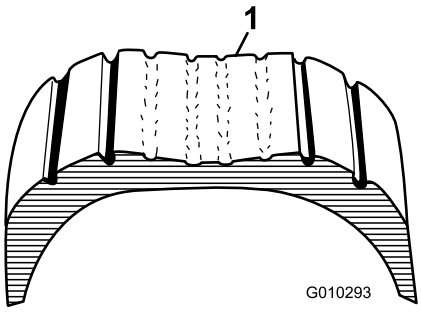

g010293

Figure 12

1. Over-inflated tire

Adding Fuel

- For best results, use only clean, fresh (less than 30 days old), unleaded gasoline with an cetane rating of 87 or higher ((R+M)/2 rating method).
- **Ethanol**: Gasoline with up to 10% ethanol (gasohol) or 15% MTBE (methyl tertiary butyl ether) by volume is acceptable. Ethanol and MTBE are not the same. Gasoline with 15% ethanol (E15) by volume is not approved for use. **Never use gasoline that contains more than 10% ethanol by volume**, such as E15 (contains 15% ethanol), E20 (contains 20% ethanol), or E85 (contains up to 85% ethanol). Using unapproved gasoline may cause performance problems and/or engine damage which may not be covered under warranty.
- **Do not** use gasoline containing methanol.
- **Do not** store fuel either in the fuel tank or fuel containers over the winter unless you use a fuel stabilizer.
- **Do not** add oil to gasoline.

Using Stabilizer/Conditioner

Use fuel stabilizer/conditioner in the machine to keep the fuel fresh longer when used as directed by the fuel-stabilizer manufacturer.

Important: **Do not use fuel additives containing methanol or ethanol.**

Add the amount of fuel stabilizer/conditioner to fresh fuel as directed by the fuel-stabilizer manufacturer.

Filling the Fuel Tank

Fuel-tank capacity: 25 L (6.5 US gallons).

1. Clean the area around the fuel-tank cap.
2. Remove the fuel-tank cap (Figure 13).

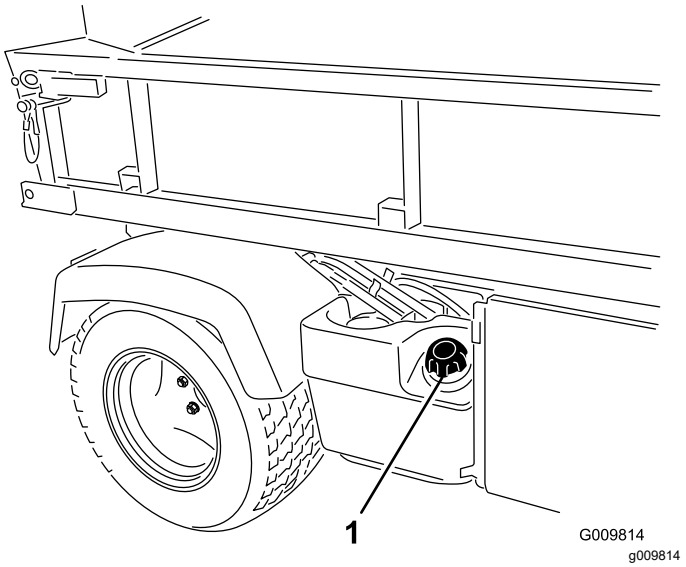

Figure 13

1. Fuel-tank cap

3. Fill the tank to approximately 25 mm (1 inch) below the bottom of the filler neck, and install the cap.

   Note: Do not overfill the fuel tank.
4. Wipe up any spilled fuel to prevent a fire hazard.

Breaking in a New Machine

Service Interval: After the first 100 hours—Perform the guidelines for breaking in a new machine.

Perform the following to provide proper performance for the machine:

- Ensure that the brakes are burnished; refer to 3 Burnishing the Brakes (page 12).
- Check the fluid and engine-oil levels regularly. Remain alert for signs that the machine or its components are overheating.
- After starting a cold engine, let it warm up for about 15 seconds before using the machine.

  Note: Allow more time for the engine to warm up when operating in cold temperatures.
- Vary the machine speed during operation. Avoid fast starts and quick stops.
- A break-in oil for the engine is not required. Original engine oil is the same type specified for regular oil changes.
- Refer to Maintenance (page 30) for any special, low-hour checks.

Checking the Safety-Interlock System

Service Interval: Before each use or daily

The purpose of the safety-interlock system is to prevent the engine from cranking or starting, unless you press the clutch pedal.

⚠ CAUTION

If the safety-interlock switches are disconnected or damaged, the machine could operate unexpectedly, causing personal injury.

- **Do not tamper with the safety-interlock switches.**
- **Check the operation of the safety-interlock switches daily, and replace any damaged switches before operating the machine.**

Note: Refer to the attachment *Operator's Manual* for procedures on checking the attachment interlock system.

Verifying the Clutch-Interlock Switch

1. Sit on the operator's seat and engage the parking brake.
2. Move the shift lever to the NEUTRAL position.

   Note: The engine does not start if the hydraulic-lift lever is locked in the forward position.
3. Without pressing the clutch pedal, rotate the key switch clockwise to the START position.

   Note: If the engine cranks or starts, there is a malfunction in the interlock system that you must repair before operating the machine.

Verifying the Hydraulic-Lift Lever Safety-Interlock Switch

1. Sit on the operator's seat and engage the parking brake.
2. Move the shift lever to the NEUTRAL position and ensure that the hydraulic-lift lever is in the center position.
3. Press the clutch pedal.
4. Move the hydraulic-lift lever forward and rotate the key switch to the START position.

   Note: If the engine cranks or starts, there is a malfunction in the interlock system that you must repair before operating the machine.

During Operation

During Operation Safety

General Safety

- The owner/operator can prevent and is responsible for accidents that may cause personal injury or property damage.
- Passengers should sit in the designated seating positions only. Do not carry passengers in the cargo bed. Keep bystanders and children out of the operating area.
- Wear appropriate clothing, including eye protection; long pants; substantial, slip-resistant footwear; and hearing protection. Tie back long hair and do not wear loose clothing or loose jewelry.
- Use your full attention while operating the machine. Do not engage in any activity that causes distractions; otherwise, injury or property damage may occur.
- Do not operate the machine while ill, tired, or under the influence of alcohol or drugs.
- Operate the machine outdoors or in a well-ventilated area only.
- Do not exceed the maximum gross vehicle weight (GVW) of the machine.
- Use extra caution when operating, braking, or turning the machine with a heavy load in the cargo bed.
- Carrying oversized loads in the cargo bed reduces the stability of the machine. Do not exceed the carrying capacity of the bed.
- Carrying material that cannot be bound to the machine adversely affects the steering, braking, and stability of the machine. When you carry material that cannot be bound to the machine, use caution when steering or braking.
- Carry a reduced load and reduce the ground speed of the machine when operating on rough, uneven terrain, and near curbs, holes, and other sudden changes in terrain. Loads may shift, causing the machine to become unstable.
- Before you start the machine, ensure that the transmission is in neutral, the parking brake is engaged, and you are in the operating position.
- You and your passengers should remain seated whenever the machine is moving. Keep your hands on the steering wheel; your passengers should use the handholds provided. Keep arms and legs within the machine body at all times.
- Operate the machine only in good visibility. Watch for holes, ruts, bumps, rocks, or other

hidden objects. Uneven terrain could overturn the machine. Tall grass can hide obstacles. Use care when approaching blind corners, shrubs, trees, or other objects that may obscure your vision.

- Do not drive the machine near drop-offs, ditches, or embankments. The machine could suddenly roll over if a wheel goes over the edge or if the edge gives way.
- Always watch out for and avoid low overhangs such as tree limbs, door jambs, overhead walkways, etc.
- Look behind and down before reversing the machine to be sure of a clear path.
- When using the machine on public roads, follow all traffic regulations and use any additional accessories that may be required by law, such as lights, turn signals, slow-moving vehicle (SMV) signs, and others as required.
- If the machine ever vibrates abnormally, stop and shut off the machine immediately, wait for all movement to stop, and inspect for damage. Repair all damage to the machine before resuming operation.
- It can take longer to stop the machine on wet surfaces than on dry surfaces. To dry out wet brakes, drive slowly on a level surface while putting light pressure on the brake pedal.
- Operating the machine at high speed and then quickly stopping may cause the rear wheels to lock up, which impairs your control of the machine.
- Do not touch the engine, transmission, muffler, or muffler manifold while the engine is running, or soon after you shut off the engine, because these areas may be hot enough to cause burns.
- Do not leave a running machine unattended.
- Before you leave the operating position, do the following:
  - Park the machine on a level surface.
  - Shift the transmission to the NEUTRAL position.
  - Engage the parking brake.
  - Lower the cargo bed.
  - Shut off the machine and remove the key.
  - Wait for all movement to stop.
- Do not operate the machine when there is the risk of lightning.
- Use accessories and attachments approved by The Toro® Company only.

Rollover Protection System (ROPS) Safety

- The ROPS is an integral safety device.
- **Do not** remove the ROPS from the machine.
- Always wear your seat belt; ensure that it is attached and that you can release it quickly in an emergency.
- Check carefully for overhead obstructions and do not contact them.
- Keep the ROPS in safe operating condition by thoroughly inspecting it periodically for damage and keeping all the mounting fasteners tight.
- Replace damaged ROPS components. Do not repair or alter them.

Slope Safety

Slopes are a major factor related to loss-of-control and tip-over accidents, which can result in severe injury or death.

- Survey the site to determine which slopes are safe for operating the machine and establish your own procedures and rules for operating on those slopes. Always use common sense and good judgment when performing this survey.
- If you feel uneasy operating the machine on a slope, do not do it.
- Keep all movement on slopes slow and gradual. Do not suddenly change the speed or direction of the machine.
- Avoid operating the machine on wet terrain. Tires may lose traction. A rollover can occur before the tires lose traction.
- Travel straight up and down a slope.
- If you begin to lose momentum while climbing a slope, gradually engage the brakes and slowly reverse the machine straight down the slope.
- Turning while going up or down a slope can be dangerous. If you must turn on a slope, do it slowly and cautiously.
- Heavy loads affect stability on a slope. Carry a reduced load and reduce your ground speed when operating on a slope or if the load has a high center of gravity. Secure the load to the cargo bed of the machine to prevent the load from shifting. Take extra care when hauling loads that shift easily (e.g., liquids, rock, sand, etc.).
- Avoid starting, stopping, or turning the machine on a slope, especially with a load. Stopping while going down a slope takes longer than stopping on level ground. If you must stop the machine, avoid sudden speed changes, which can cause the machine to tip or roll over. Do not engage the brakes suddenly when rolling rearward, as this may cause the machine to overturn.

Loading and Dumping Safety

- Do not exceed the gross vehicle weight (GVW) of the machine when operating it with a load in

the cargo bed and/or towing a trailer; refer to Specifications (page 19).

- Distribute the load in the cargo bed evenly to improve the stability and control of the machine.
- Before dumping, ensure that there is no one behind the machine.
- Do not dump a loaded cargo bed while the machine is sideways on a slope. The change in weight distribution may cause the machine to overturn.

Operating the Cargo Bed

Raising the Cargo Bed

⚠ WARNING

A raised bed could fall and injure persons that are working beneath it.

- **Always use the prop rod to hold the bed up before working under the bed.**
- **Remove any load material from the bed before raising it.**

⚠ WARNING

Driving the machine with the cargo bed raised could cause the machine to tip or roll easier. You could damage the structure of the cargo bed if you operate the machine with the bed raised.

- **Operate the machine when the cargo bed is down.**
- **After emptying the cargo bed, lower it.**

⚠ CAUTION

If a load is concentrated near the back of the cargo bed when you release the latches, the bed may unexpectedly tip open, injuring you or bystanders.

- **Center loads in the cargo bed, if possible.**
- **Hold the cargo bed down and ensure that no one is leaning over the bed or standing behind it when releasing the latches.**
- **Remove all cargo from the bed before lifting the bed up to service the machine.**

Move the lever rearward to raise the cargo bed (Figure 14).

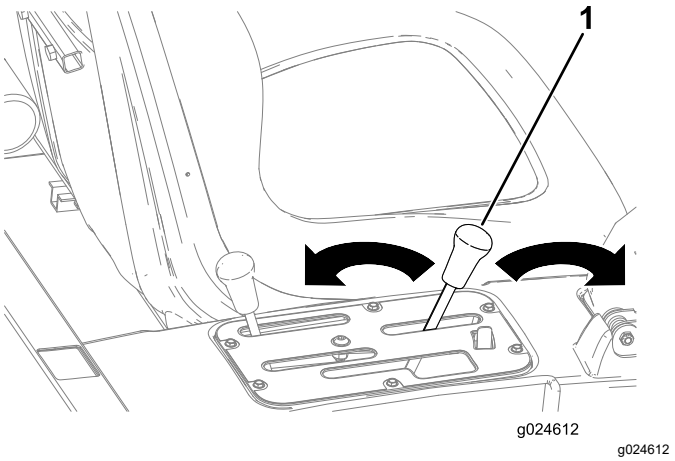

Figure 14

1. Cargo bed lever

Lowering the Cargo Bed

⚠ WARNING

The weight of the bed may be heavy. Hands or other body parts could be crushed.

Keep your hands and other body parts away when lowering the bed.

Move the lever forward to lower the cargo bed (Figure 14).

Opening the Tailgate

1. Ensure that the cargo bed is down and latched.
2. Open the latches on the left and right side of the cargo bed and lower the tailgate (Figure 15).

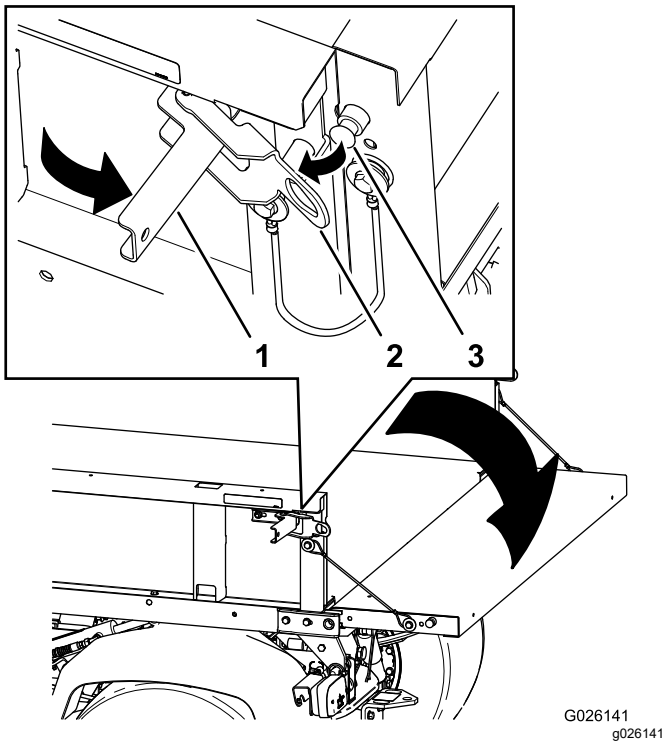

Figure 15

1. Latch handle
2. Latch gate
3. Latch pin

Starting the Engine

1. Sit on the operator's seat and engage the parking brake.
2. Disengage the PTO and high-flow hydraulics (if equipped) and move the throttle lever to the OFF position (if equipped).
3. Move the shift lever to the NEUTRAL position and press the clutch pedal.
4. Ensure that the hydraulic-lift lever is in the center position.
5. Keep your foot off the accelerator pedal.
6. Rotate the key switch clockwise to start the engine.

   Note: Release the key switch when the engine starts.

Important: **To prevent overheating of the starter motor, do not engage the starter for longer than 15 seconds. After 15 seconds of continuous cranking, wait for 60 seconds before engaging the starter motor again.**

Engaging the 4-Wheel Drive

4-Wheel Drive Models Only

To enable automatic 4-Wheel Drive, press the top of the rocker switch into the 4X4 AUTO position (Figure 16).

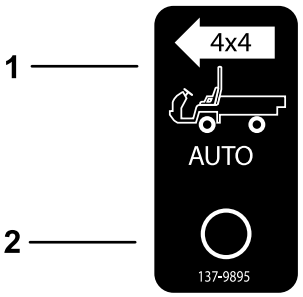

Figure 16

1. 4x4 auto enable—on
2. 4x4 auto enable—off

When the 4WD switch is on, the machine automatically engages the 4-wheel drive if the sensor detects the back wheels spinning freely. When the 4-wheel drive is engaged, the 4WD switch light turns on.

Important: **When in reverse, the machine does not automatically engage the 4-wheel drive.**

In reverse, you must manually engage the 4-wheel drive using the 4WD button.

To engage the 4-wheel drive manually, press and hold the 4WD button on the center console while the vehicle is in motion and the 4-wheel drive engages.

Note: The 4-wheel drive remains engaged only as long as you hold the button; the 4WD switch does not need to be in the AUTO position to manually engage the 4-wheel drive.

Driving the Machine

1. Disengage the parking brake.
2. Fully press the clutch pedal.
3. Move the gear-shift lever to first gear.
4. Release the clutch pedal smoothly while pressing the accelerator pedal.
5. When the machine gains enough speed, remove your foot from the accelerator pedal, fully press the clutch pedal, move the gear-shift lever to the next gear, and release the clutch pedal while pressing the accelerator pedal.
6. Repeat the procedure until the desired speed is attained.

   Important: **Always stop the machine before shifting to reverse from a forward gear or to a forward gear from reverse.**

Note: Avoid long periods of engine idling.

Use the chart below to determine the ground speed of the machine at 3,600 rpm.

Gear	Range	Ratio	Speed (kmh)	Speed (mph)
1	L	82.83 : 1	4.7	2.9
2	L	54.52 : 1	7.2	4.5
3	L	31.56 : 1	12.5	7.7
1	H	32.31 : 1	12.2	7.6
2	H	21.27 : 1	18.5	11.5
3	H	12.31 : 1	31.9	19.8
R	L	86.94 : 1	4.5	2.8
R	H	33.91 : 1	11.6	7.1

Important: **Do not attempt to push or tow the machine to get it started. Damage to the drive train could result.**

Stopping the Machine

To stop the machine, remove your foot from the accelerator pedal, then press the brake pedal.

Shutting Off the Engine

1. Park the machine on a level surface.
2. Engage the parking brake.
3. Rotate the key switch to the OFF position and remove the key.

Using the Differential Lock

⚠ WARNING

Tipping or rolling the machine on a hill will cause serious injury.

- **The extra traction available with the differential lock can be enough to get you into dangerous situations, such as climbing slopes that are too steep to turn around. Be careful when operating with the differential lock on, especially on steeper slopes.**
- **If the differential lock is on when making a sharp turn at a higher speed and the inside rear wheel lifts off the ground, there may be a loss of control, which could cause the machine to skid. Use the differential lock only at slower speeds.**

⚠ CAUTION

Turning the machine with the differential lock on may cause you to control of the machine, resulting personal injury and/or property damage.

Do not operate the machine with the differential lock on when making sharp turns or moving at high speed.

The differential lock increases the machine traction by locking the rear wheels so that a wheel does not spin out. This can help when you have heavy loads to haul on wet turf or slippery areas, going up hills, or on sandy surfaces. It is important to remember, however, that this extra traction is for temporary limited use only. Its use does not replace the safe operation.

The differential lock causes the rear wheels to spin at the same speed. When using the differential lock, your ability to make sharp turns is somewhat restricted, and may scuff the turf. Use the differential lock only when necessary, at slower speeds, and only in first or second gear.

Using the Hydraulic Control

The hydraulic control supplies hydraulic power from the machine pump whenever the engine runs. You can use the power through the quick couplers at the rear of the machine.

⚠ WARNING

Hydraulic fluid escaping under pressure can have sufficient force to penetrate skin and can cause serious injury.

Use care when connecting or disconnecting hydraulic quick couplers. Shut off the engine, engage the parking brake, lower the attachment, and place the remote hydraulic valve in the float detent position to relieve the hydraulic pressure before connecting or disconnecting the quick couplers.

Important: **If multiple machines use the same attachment, cross-contamination of the transmission fluid may occur. Change the transmission fluid more frequently.**

Using the Hydraulic Bed-Lift Lever to Control Hydraulic Attachments

- **OFF Position**

  This is the normal position for the control valve when it is not in use. In this position, the work ports of the control valve are blocked and any load is held by the check valves in both directions.

- **RAISE (Quick Coupler A) Position**

  This position lifts the bed and rear hitch attachment, or applies pressure to quick coupler A. This position also allows hydraulic fluid to return from quick coupler B to flow back into the valve and then out to the reservoir. This is a momentary position, and when you release the lever, it spring-returns to the center, OFF position.

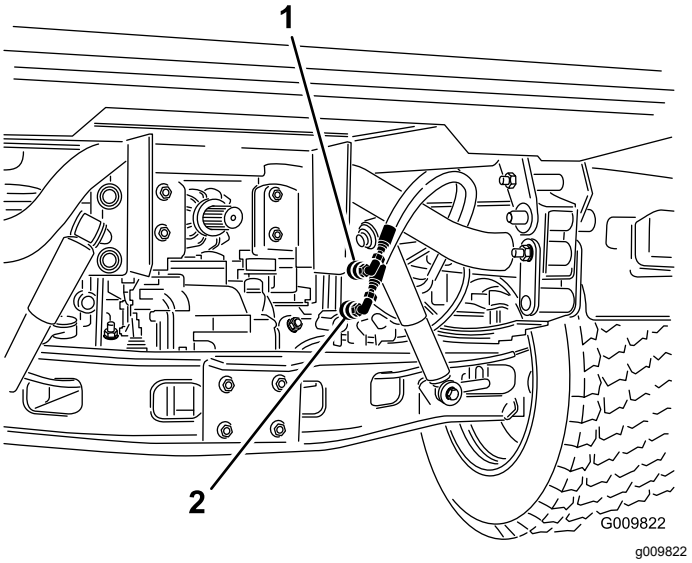

Figure 17

1. Quick coupler A position
2. Quick coupler B position

- **LOWER (Quick Coupler B) Position**

  This position lowers the bed, rear hitch attachment, or applies pressure to quick coupler B. This also allows hydraulic fluid to return from quick coupler A to flow back into the valve and then out to the reservoir. This is a momentary position, and when you release the lever, it spring-returns to the center, OFF position. Momentarily holding and then releasing the control lever in this position provides hydraulic-fluid flow to quick coupler B, which provides power down on the rear hitch. When you release it, it holds the down-pressure on the hitch.

  Important: **If you use it with a hydraulic cylinder, holding the control lever in the lower position causes the hydraulic-fluid flow to go over a relief valve, which can damage the hydraulic system.**

- **ON Position**

  This position is similar to the LOWER (QUICK COUPLER B POSITION). It also directs hydraulic fluid to quick coupler B, except that the lever is held in this position by a detent lever in the control panel. This allows hydraulic fluid to flow continuously to equipment that use a hydraulic motor.

  Use this position only on attachments with a hydraulic motor attached.

  Important: **If you use it with a hydraulic cylinder or no attachment, the ON position causes the hydraulic-fluid flow to go over a relief valve, which can damage the hydraulic system. Use this position only momentarily or with a motor attached.**

  Important: **Check the hydraulic-fluid level after installation of an attachment. Check the operation of the attachment by cycling the attachment several times to purge air from the system, then check hydraulic-fluid level again. The attachment cylinder slightly affects the fluid level in the transaxle. Operating the machine with a low hydraulic-fluid level can damage the pump, remote hydraulics, power steering, and machine transaxle.**

Connecting the Quick Couplers

Important: **Clean dirt from the quick couplers before connecting them. Dirty couplers can introduce contamination into the hydraulic system.**

1. Pull back the locking ring on the coupler.
2. Insert the hose nipple into the coupler until it snaps into position.

Note: When attaching remote equipment to the quick couplers, determine which side requires pressure, then attach that hose to quick coupler B, which has pressure when you push the control lever forward or locked in the ON position.

Disconnecting the Quick Couplers

Note: With both the machine and attachment shut off, move the lift lever back and forth to remove the system pressure and ease the disconnection of the quick couplers.

1. Pull back the locking ring on the coupler.
2. Pull the hose firmly from the coupler.

   Important: **Clean and install the dust plug and dust covers to the quick coupler ends when not in use.**

Troubleshooting the Hydraulic Control

- **Difficulty in connecting or disconnecting quick couplers.**

  The pressure is not relieved (the quick coupler is under pressure).

- **The power steering is turning with great difficulty or it is not turning at all.**
  - The hydraulic-fluid level is low.
  - The hydraulic-fluid temperature is too hot.
  - The pump is not operating.
- **There are hydraulic leaks.**
  - The fittings are loose.
  - The fitting is missing the O-ring.
- **An attachment does not function.**
  - The quick couplers are not fully engaged.
  - The quick couplers are interchanged.
- **There is a squealing noise.**
  - Remove the valve left in the ON position detent, causing hydraulic fluid to flow over the relief valve.
  - The belt is loose.
- **The engine does not start.**

  The hydraulic lever is locked in the FORWARD position.

After Operation

After Operation Safety

General Safety

- Before you leave the operating position, do the following:
  - Park the machine on a level surface.
  - Shift the transmission to the NEUTRAL position.
  - Engage the parking brake.
  - Lower the cargo bed.
  - Shut off the machine and remove the key.
  - Wait for all movement to stop
- Allow the machine to cool before adjusting, servicing, cleaning, or storing it.
- Do not store the machine where there is an open flame, spark, or pilot light, such as on a water heater or other appliance.
- Keep all parts of the machine in good working condition and all hardware tightened.
- Maintain and clean the seat belt(s) as necessary.
- Replace all worn, damaged, or missing decals.

Hauling the Machine

- Use care when loading or unloading the machine into a trailer or a truck.
- Use full-width ramps for loading the machine into a trailer or a truck.
- Tie the machine down securely.

Refer to Figure 18 and Figure 19 for the tie-down locations on the machine.

Note: Load the machine on the trailer with the front of the machine facing forward. If that is not possible, secure the machine hood to the frame with a strap, or remove the hood and transport and secure it separately; otherwise, the hood may blow off during transport.

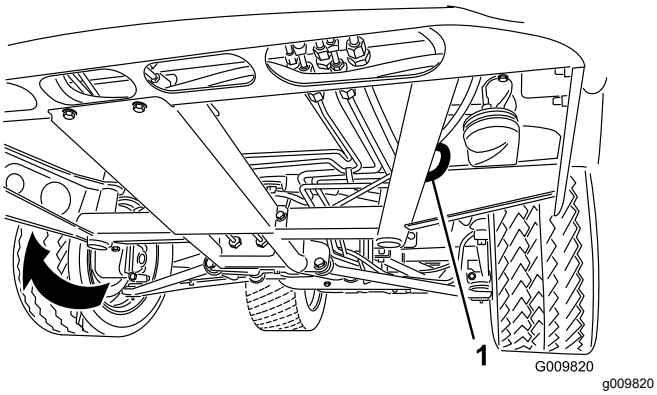

Figure 18

1. Eye hole in the frame (each side)

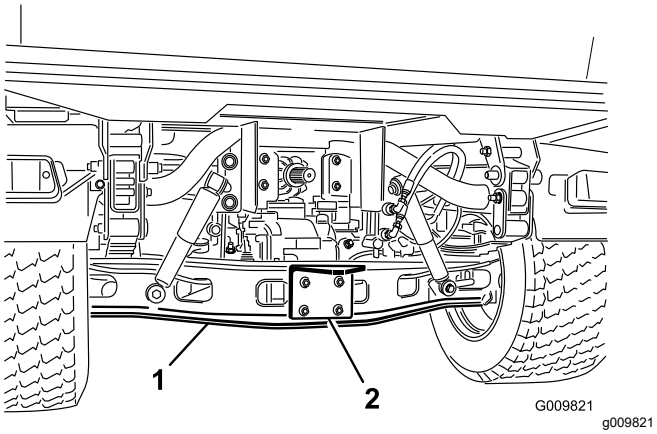

Figure 19

1. Axle
2. Hitch plate

Towing the Machine

In case of an emergency, you can tow the machine for a short distance; however, this is not the standard operating procedure.

⚠ WARNING

Towing at excessive speeds could cause a loss of steering control, resulting in personal injury.

Never tow the machine at faster than 8 km/h (5 mph).

Note: The power steering does not function, making it difficult to steer.

Towing the machine is a 2-person job. If you must move the machine a considerable distance, transport it on a truck or trailer.

1. Affix a tow line to the tongue at the front of the frame of the machine (Figure 18).
2. Move the transmission to the NEUTRAL position and disengage the parking brake.

Towing a Trailer

The machine is capable of pulling trailers and attachments of greater weight than the machine itself. Several types of tow hitches are available for the machine, depending on your application. Contact your Authorized Service Dealer for details.

When equipped with a tow hitch bolted onto the rear axle tube, your machine can tow trailers or attachments with a maximum gross trailer weight (GTW) up to 1587 kg (3,500 lb).

Always load a trailer with 60% of the cargo weight in the front of the trailer. This places approximately 10% (272 kg (600 lb) maximum) of the gross trailer weight (GTW) on the tow hitch of the machine.

When hauling cargo or towing a trailer (attachment), do not overload the machine or trailer. Overloading can cause poor performance or damage to the brakes, axle, engine, transaxle, steering, suspension, body structure, or tires.

Important: **To reduce potential for drive line damage, use low range.**

When towing fifth-wheel attachments, like a fairway aerator, always install the wheel bar (included with the fifth wheel kit) to prevent the front wheels from lifting off the ground if the towed attachments movement is suddenly impaired.

Maintenance

Maintenance Safety

- Do not allow untrained personnel to service the machine.
- Before you leave the operating position, do the following:
  - Park the machine on a level surface.
  - Shift the transmission to the NEUTRAL position.
  - Engage the parking brake.
  - Lower the cargo bed.
  - Shut off the machine and remove the key.
  - Wait for all movement to stop.
- Allow the machine to cool before adjusting, servicing, cleaning, or storing it.
- Support the machine with jack stands whenever you work under the machine.
- Do not work under a raised bed without the proper bed safety support in place.
- Ensure that all hydraulic-line connectors are tight and that all the hydraulic hoses and lines are in good condition before applying pressure to the system.
- Before disconnecting or performing any work on the hydraulic system, relieve all pressure in the system by shutting off the motor, cycling the dump valve from raise to lower, and/or lowering the cargo bed and attachments. Place the remote hydraulics lever in the float position. If the bed must be in raised position, secure it with the safety support.
- Carefully release pressure from components with stored energy.
- Do not charge the batteries while servicing the machine.
- To ensure that the entire machine is in good condition, keep all hardware properly tightened.
- To reduce the potential fire hazard, keep the machine area free of excessive grease, grass, leaves, and accumulation of dirt.
- If possible, do not perform maintenance while the machine is running. Keep away from moving parts.
- If you must run the machine to perform a maintenance adjustment, keep your hands, feet, clothing, and any parts of the body away from any moving parts. Keep bystanders away from the machine.
- Clean up oil and fuel spills.
- Check the parking brake operation as recommended in the maintenance schedule and adjust and service it as required.
- Keep all parts of the machine in good working condition and all the hardware properly tightened. Replace all worn or damaged decals.
- Never interfere with the intended function of a safety device or reduce the protection provided by a safety device.
- Do not overspeed the engine by changing the governor settings. To ensure safety and accuracy, have an Authorized Service Dealer check the maximum engine speed with a tachometer.
- If major repairs are ever necessary or assistance is required, contact an authorized Toro distributor.
- Altering this machine in any manner may affect the operation of the machine, performance, durability, or its use may result in injury or death. Such use could void the product warranty of The Toro® Company.

Recommended Maintenance Schedule(s)

Maintenance Service Interval	Maintenance Procedure
After the first 2 hours	• Torque the front and rear wheel lug nuts.
After the first 10 hours	• Check the adjustment of the shift cables. • Torque the front and rear wheel lug nuts. • Check the adjustment of the parking brake. • Check the condition and tension of the alternator belt. • Replace the hydraulic filter.
After the first 50 hours	• Change the engine oil and filter. • Adjust the engine-valve clearance.
After the first 100 hours	• Perform the guidelines for breaking in a new machine.
Before each use or daily	• Inspect the seat belt(s) for wear, cuts, and other damage. Replace the seat belt(s) if any component does not operate properly. • Check the tire pressure. • Check the operation of the safety-interlock system. • Check the engine-oil level. • Check the engine-coolant level. • Remove debris from the engine area and radiator. (Clean it more frequently in dirty conditions.) • Check the brake-fluid level. Check the brake-fluid level before you first start the engine. • Check the transaxle/hydraulic-fluid level. (Check the fluid level before the engine is first started and every 8 hours or daily, thereafter.) • Check the high-flow hydraulic-fluid level (TC models only). (Check the level of hydraulic fluid before the engine is first started, and daily thereafter)
Every 25 hours	• Remove the air-cleaner cover and clean out the debris.
Every 50 hours	• Check the battery-fluid level (every 30 days if in storage). • Check the battery cable connections.
Every 100 hours	• Grease the bearings and bushings (lubricate more frequently in heavy-duty applications). • Change the air-cleaner filter (more frequently in dusty or dirty conditions). • Check the spark plugs. • Check the level of the front differential oil (4-wheel drive models only). • Inspect the condition of the tires.
Every 200 hours	• Change the engine oil and filter. • Inspect the constant-velocity boot for cracks, holes, or a loose clamp (4-wheel drive models only). • Check the adjustment of the shift cables. • Check the adjustment of the high-low cable. • Check the adjustment of the differential-lock cable. • Torque the front and rear wheel lug nuts. • Check the adjustment of the parking brake. • Check the adjustment of the brake pedal. • Check the condition and tension of the alternator belt. • Check the adjustment of the clutch pedal. • Inspect the service and parking brakes.
Every 400 hours	• Replace the fuel filter. • Inspect the fuel lines and connections. • Check the front wheel alignment. • Visually inspect the brakes for worn brake shoes.
Every 600 hours	• Adjust the engine-valve clearance.

Maintenance Service Interval	Maintenance Procedure
Every 800 hours	• Change the front differential oil (4-wheel drive models only). • Change the hydraulic fluid and clean the strainer. • Replace the hydraulic filter. • If you are not using the recommended hydraulic fluid or have ever filled the reservoir with an alternative fluid, replace the high-flow hydraulic fluid and filter.
Every 1,000 hours	• Flush/replace the coolant system fluid. • Change the brake fluid. • If you are using the recommended hydraulic fluid, replace the high-flow hydraulic filter.
Every 2,000 hours	• If you are using the recommended hydraulic fluid, change the high-flow hydraulic fluid.

Note: Download a free copy of the electrical schematic by visiting www.Toro.com and searching for your machine from the Manuals link on the home page.

Important: **Refer to your engine owner's manual for additional maintenance procedures.**

⚠ WARNING

Failing to properly maintain the machine could result in premature failure of machine systems, causing possible harm to you or bystanders.

Keep the machine well maintained and in good working order as indicated in these instructions.

⚠ CAUTION

Only qualified and authorized personnel should maintain, repair, adjust, or inspect the machine.

- **Avoid fire hazards and have fire-protection equipment present in the work area. Do not use an open flame to check fluid levels or leakage of fuel, battery electrolyte, or coolant.**
- **Do not use open pans of fuel or flammable cleaning fluids for cleaning parts.**

⚠ CAUTION

If you leave the key in the switch, someone could accidently start the engine and seriously injure you or other bystanders.

Shut off the engine and remove the key from the switch before you perform any maintenance.

Maintaining the Machine under Special Operating Conditions

Important: **If the machine is subjected to any of the conditions listed below, perform maintenance twice as frequently:**

- Desert operation
- Cold climate operation—below 10°C (50°F)
- Trailer towing
- Frequent operation in dusty conditions
- Construction work
- After extended operation in mud, sand, water, or similar dirty conditions, do the following:
  - Have your brakes inspected and cleaned as soon as possible. This prevents any abrasive material from causing excessive wear.
  - Wash the machine using water alone or with a mild detergent.

    Important: **Do not use brackish or reclaimed water to clean the machine.**

Pre-Maintenance Procedures

Preparing the Machine for Maintenance

1. Park the machine on a level surface.
2. Engage the parking brake.
3. Empty and raise the cargo bed; refer to Raising the Cargo Bed (page 24).
4. Shut off the engine and remove the key.
5. Allow the machine to cool before performing maintenance.

Using the Bed Support

Important: **Always install or remove the bed support from the outside of the bed.**

1. Raise the bed until the lift cylinders are fully extended.
2. Remove the bed support from the storage brackets on the back of the ROPS panel (Figure 20).

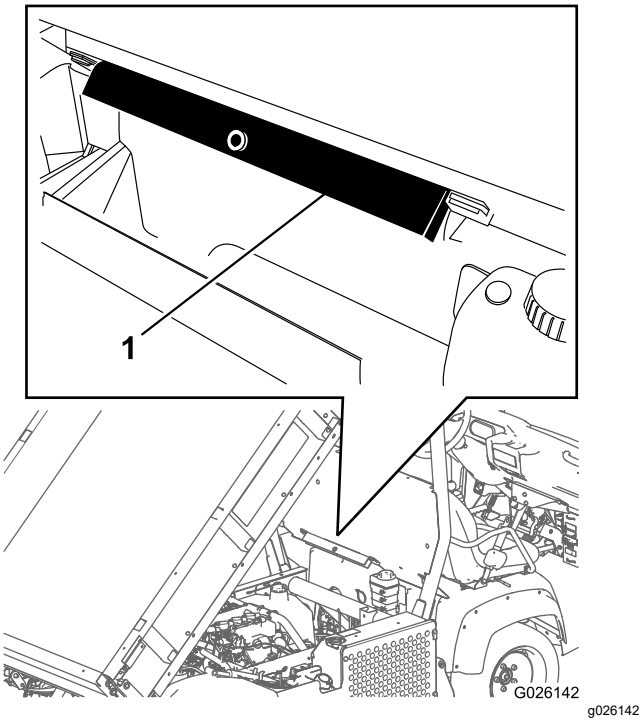

Figure 20

1. Bed support

3. Push the bed support onto the cylinder rod, and ensure that the support-end tabs rest on the end of the cylinder barrel and cylinder-rod end (Figure 21).

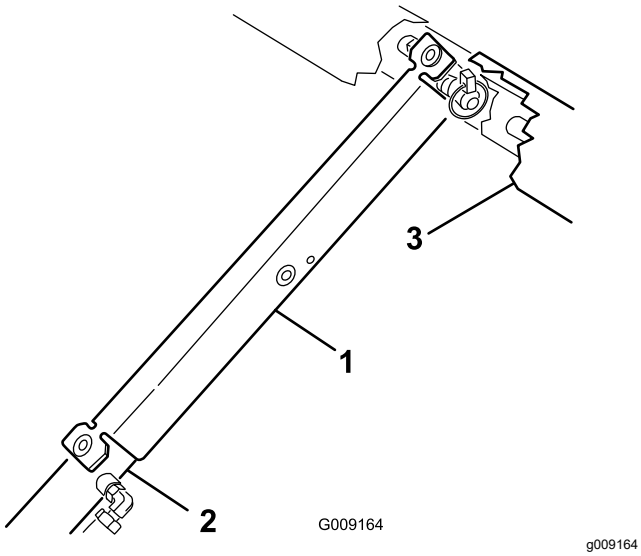

Figure 21

1. Bed support
2. Cylinder barrel
3. Bed

4. Remove the bed support from the cylinder, and insert it into the brackets on the back of the ROPS panel.

   Important: **Do not try to lower the bed with the bed-safety support on the cylinder.**

Removing the Full Bed

1. Start the engine, engage the hydraulic-lift lever, and lower the bed until the cylinders are loose in the slots.
2. Release the lift lever and shut off the engine.
3. Remove the lynch pins from the outer ends of the cylinder rod clevis pins (Figure 22).

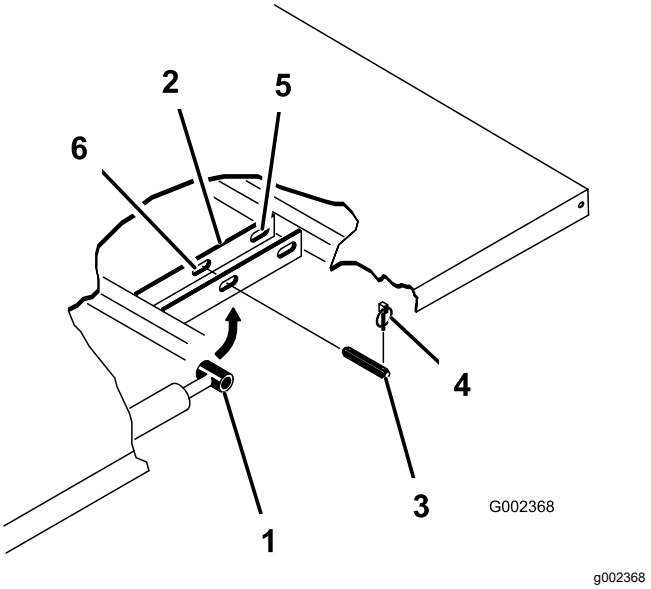

Figure 22

1. Cylinder rod end
2. Bed-mounting plate
3. Clevis pin
4. Lynch pin
5. Rear slots (full bed)
6. Front slots (2/3 full bed)

4. Remove the clevis pins securing the cylinder rod ends to the bed-mounting plates by pushing the pins toward the inside (Figure 22).
5. Remove the lynch pins and clevis pins securing the pivot brackets to the frame channels (Figure 22).
6. Lift the bed off the machine.

⚠ CAUTION

The full bed weighs approximately 148 kg (325 lb), so do not try to install or remove it by yourself.

Use an overhead hoist or get the help of 2 or 3 other people.

7. Store the cylinders in the storage clips.
8. Engage the hydraulic lift-lock lever on the machine to prevent accidental extension of the lift cylinders.

Installing the Full Bed

Note: If you are installing the bed sides on the flat bed, it is easier to install them before installing the bed on the machine.

Ensure that the rear pivot plates are bolted to the bed frame/channel so that the lower end angles to the rear (Figure 23).

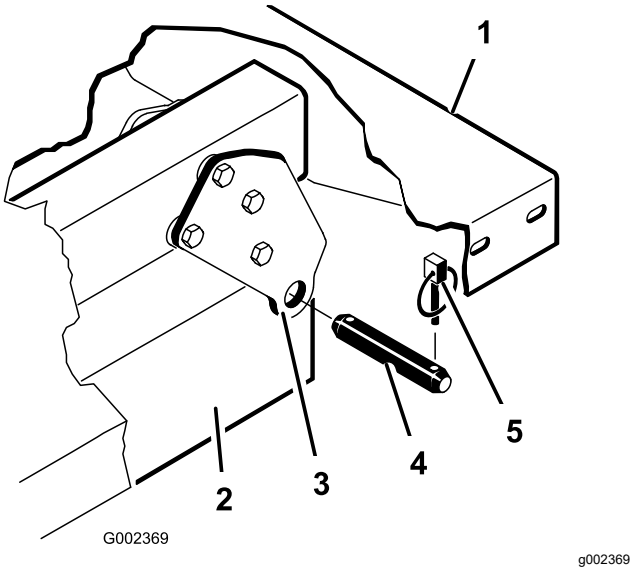

Figure 23

1. Left, rear corner of bed
2. Machine frame channel
3. Pivot plate
4. Clevis pin
5. Lynch pin

⚠ CAUTION

The full bed weighs approximately 148 kg (325 lb), so do not try to install or remove it by yourself.

Use an overhead hoist or get the help of 2 or 3 other people.

Ensure that the spacer brackets and wear blocks (Figure 24) are installed with the carriage-bolt heads positioned inside the machine.

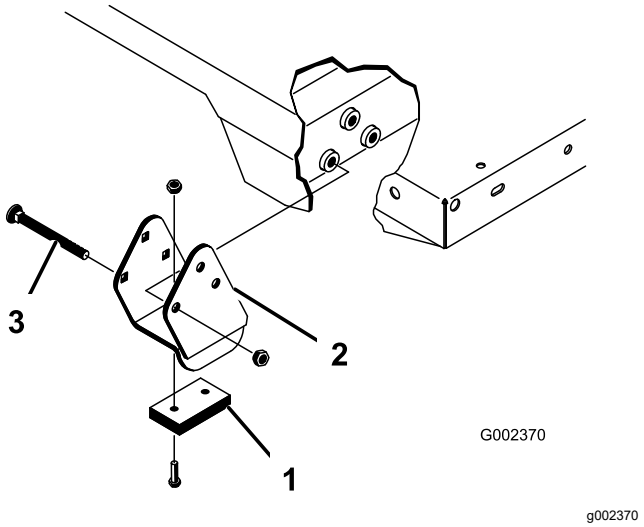

Figure 24

1. Wear block
2. Spacer bracket
3. Carriage bolt

1. Ensure that the lift cylinders are fully retracted.
2. Carefully set the bed onto the machine frame, aligning the rear bed pivot-plate holes with the holes in the rear frame channel, and install the 2 clevis pins and lynch pins (Figure 24).
3. With the bed lowered, secure each cylinder rod end to the appropriate slots in the bed-mounting plates with a clevis pin and lynch pin.
4. Insert the clevis pin from outside of the bed with the lynch pin oriented toward the outside (Figure 24).

   Note: The rear slots are for a full bed installation; the front slots are for a 2/3-full bed installation.

   Note: You may need to start the engine to extend or retract the cylinders for alignment with the holes.

   Note: You can plug the unused slot with a bolt and nut to prevent assembly errors.
5. Start the engine and engage the hydraulic-lift lever to raise the bed.
6. Release the lift lever and shut off the engine.
7. Install the bed-safety support to prevent accidentally lowering the bed; refer to Using the Bed Support (page 33).
8. Install the lynch pins to the inside ends of the clevis pins.

   Note: If the automatic tailgate release is installed on the bed, ensure that the front dump link rod is placed on the inside of the left clevis pin before you install the lynch pin.

Raising the Machine

⚠ DANGER

A machine on a jack may be unstable and slip off the jack, injuring anyone beneath it.

- **Do not start the machine while the machine is on a jack, as the engine vibration or wheel movement could cause the machine to slip off the jack.**
- **Always remove the key from the key switch before getting off the machine.**
- **Block the tires when the machine is on a jack.**

When jacking up the front of the machine, always place a wooden block (or similar material) between the jack and the machine frame.

The jacking point at the front of the machine is located under the front, center frame support (Figure 25).

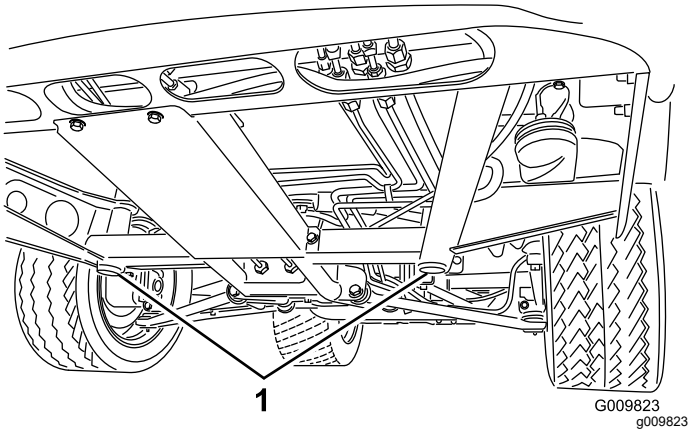

Figure 25

1. Front jacking points

The jacking point at the rear of the machine is located under the axle (Figure 26).

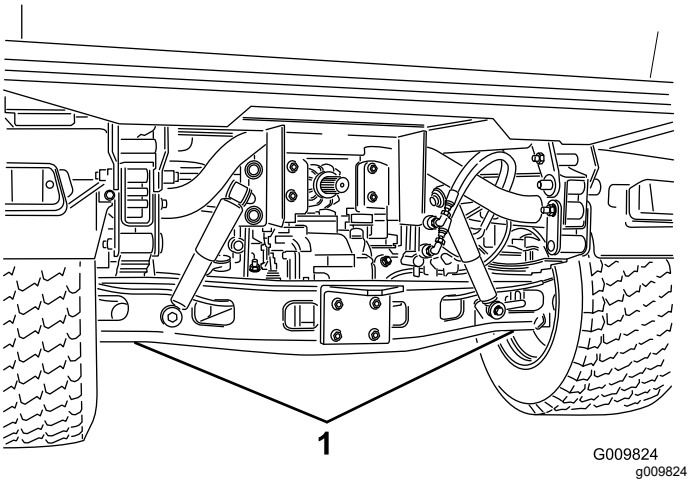

Figure 26

1. Rear jacking points

Removing and Installing the Hood

Removing the Hood

1. While grasping the hood in the headlight openings, lift up the hood to release the lower mounting tabs from the frame slots (Figure 27).

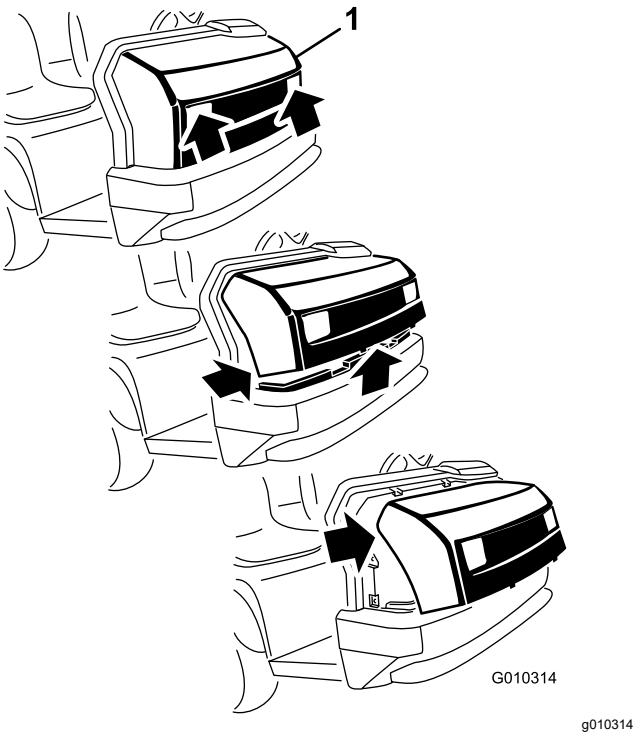

Figure 27

1. Hood

2. Pivot the bottom of the hood upward until you can pull the top mounting tabs from the frame slots (Figure 27).

3. Pivot the top of the hood forward and unplug the wire connectors from the headlights (Figure 27).
4. Remove the hood.

Installing the Hood

1. Connect the lights.
2. Insert the top mounting tabs into the frame slots (Figure 27).
3. Insert the lower mounting tabs into the frame slots (Figure 27).
4. Ensure that the hood is fully engaged in the top, sides, and bottom grooves.

Lubrication

Greasing the Bearings and Bushings

Service Interval: Every 100 hours (lubricate more frequently in heavy-duty applications).

Grease Type: No. 2 lithium grease

1. Use a rag to wipe the grease fitting clean so that foreign matter cannot be forced into the bearing or bushing.
2. With a grease gun, apply grease into the grease fittings on the machine.
3. Wipe any excess grease off the machine.

Important: **When greasing the drive shaft universal shaft bearing crosses, pump grease until it comes out of all 4 cups at each cross.**

The grease fitting locations and quantities are as follows:

- **Ball joints (4)**; refer to Figure 28
- **Tie rods (2)**; refer to Figure 28
- **Pivot mounts (2)**; refer to Figure 28
- **Steering cylinder (2)**; refer to Figure 28

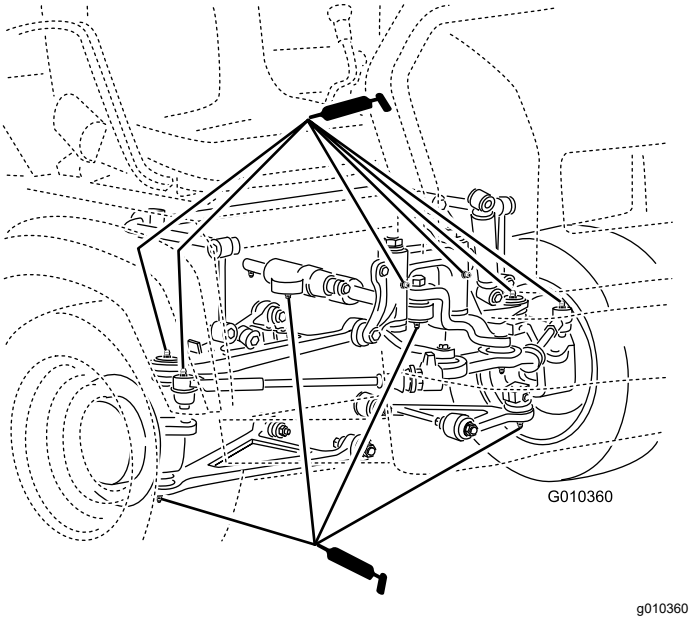

Figure 28

- **Spring tower (2)**; refer to Figure 29

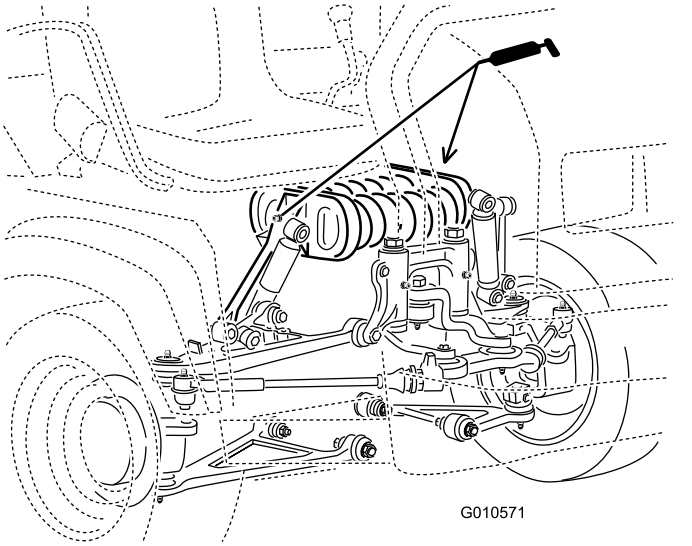

Figure 29

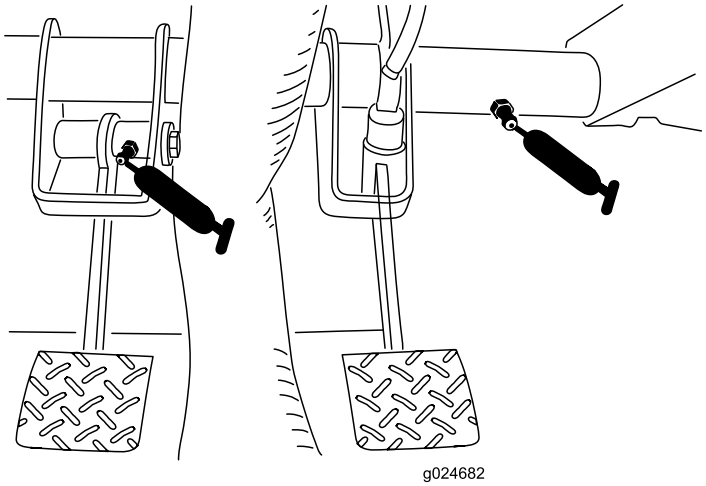

Figure 30

- **Clutch (1)**; refer to Figure 30
- **Brake (1)**; refer to Figure 30
- **U-joint (18)**; refer to Figure 31
- **4-wheel drive shaft (3)**; refer to Figure 31

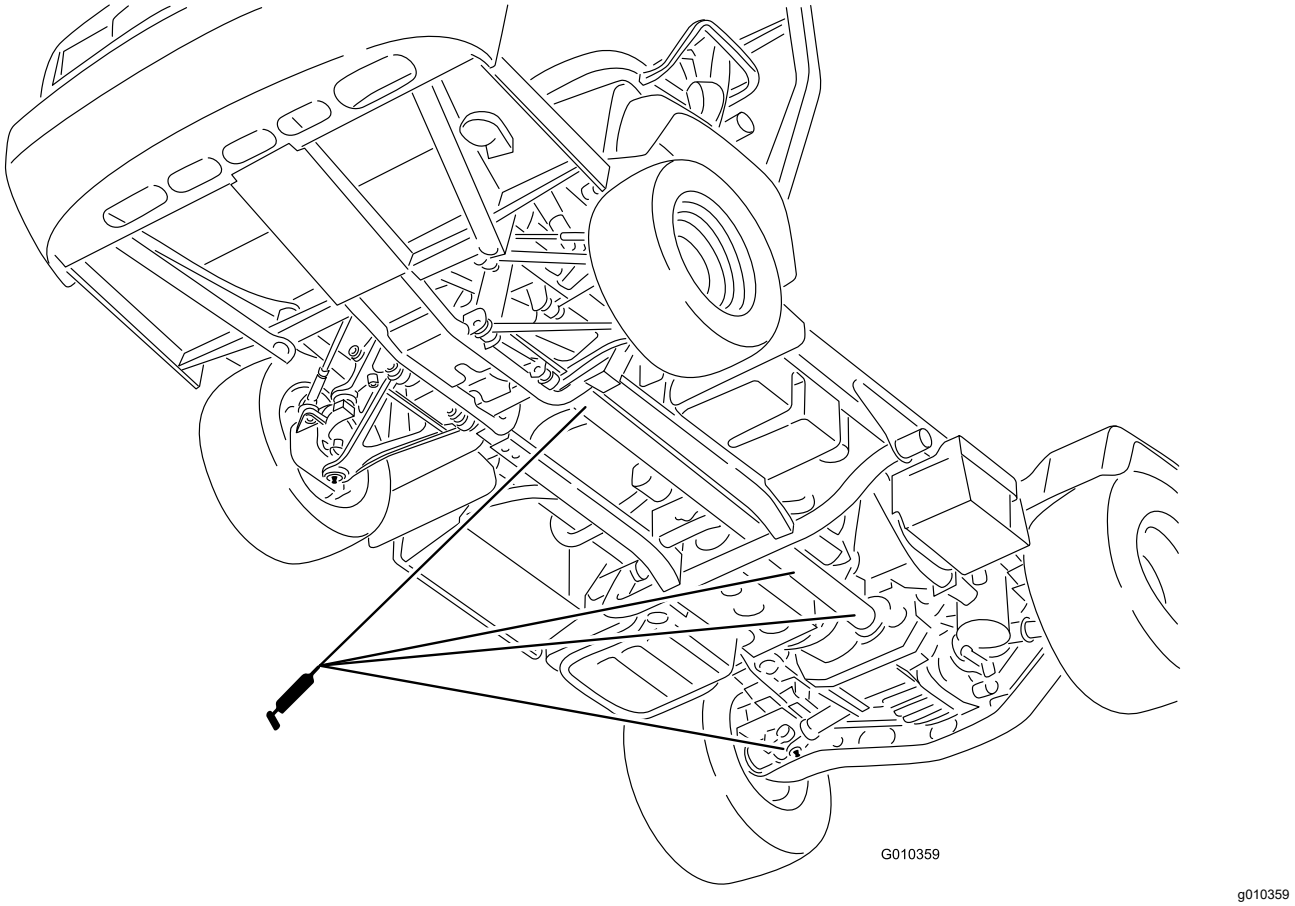

Figure 31

Engine Maintenance

Engine Safety

- Shut off the engine, remove the key, and wait for all moving parts to stop before checking the oil or adding oil to the crankcase.
- Keep your hands, feet, face, clothing, and other body parts away from the muffler and other hot surfaces.

Servicing the Air Cleaner

Service Interval: Every 25 hours—Remove the air-cleaner cover and clean out the debris.

Every 100 hours—Change the air-cleaner filter (more frequently in dusty or dirty conditions).

Inspect the air cleaner and hoses periodically to maintain maximum engine protection and to ensure maximum service life. Check the air-cleaner body for damage that could possibly cause an air leak. Replace a damaged air-cleaner body.

1. Release the latches on the air cleaner and pull the air-cleaner cover off the air-cleaner body (Figure 32).

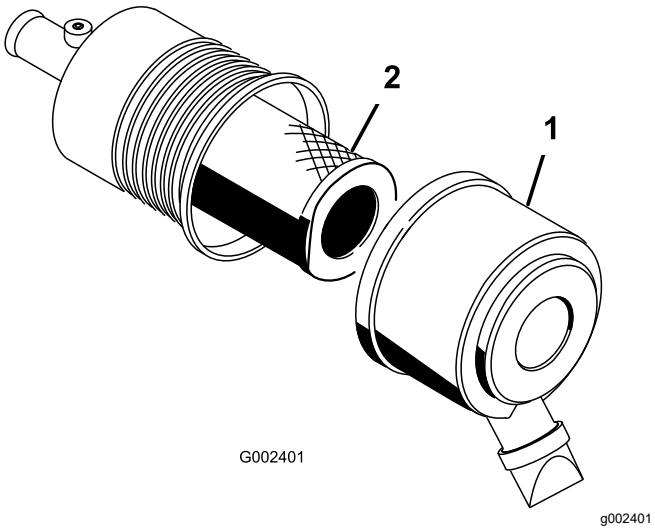

Figure 32

1. Air-cleaner cover
2. Filter

2. Squeeze the dust cap sides to open it and knock the dust out.
3. Gently slide the filter out of the air-cleaner body (Figure 32).

   Note: Avoid knocking the filter into the side of the body.

   Note: Do not attempt to clean the filter.
4. Inspect the new filter for damage by looking into the filter while shining a bright light on the outside of the filter.

   Note: Holes in the filter appear as bright spots. Inspect the element for tears, an oily film, or damage to the rubber seal. If the filter is damaged, do not use it.

   Note: To prevent engine damage, always operate the engine with the air filter and cover installed.
5. Carefully slide the filter over the body tube (Figure 32).

   Note: Ensure that it is fully seated by pushing on the outer rim of the filter while installing it.
6. Install the air-cleaner cover with the side facing up, and secure the latches (Figure 32).

Servicing the Engine Oil

Note: Change the oil more frequently when operating conditions are extremely dusty or sandy.

Note: Dispose of the used engine oil and oil filter at a certified recycling center.

Engine-Oil Specifications

Oil Type: Detergent engine oil (API SJ or higher)

Crankcase Capacity: 3.2 L (3.4 US qt) when the filter is changed

Viscosity: See the table below.

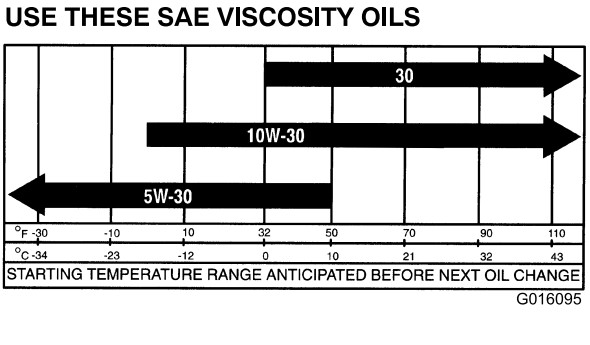

g016095

Figure 33

Checking the Engine-Oil Level

Service Interval: Before each use or daily

Note: The best time to check the engine oil is when the engine is cool before it has been started for the day. If it has already ran, allow the oil to drain back down to the sump for at least 10 minutes before checking. If the oil level is at or below the Add mark on the dipstick, add oil to bring the oil level to the Full mark. **Do not overfill the engine with oil.** If the oil level is between the Full and Add marks, no additional oil is required.

1. Park the machine on a level surface.
2. Engage the parking brake.
3. Shut off the engine and remove the key.
4. Remove the dipstick and wipe it with a clean rag (Figure 34).

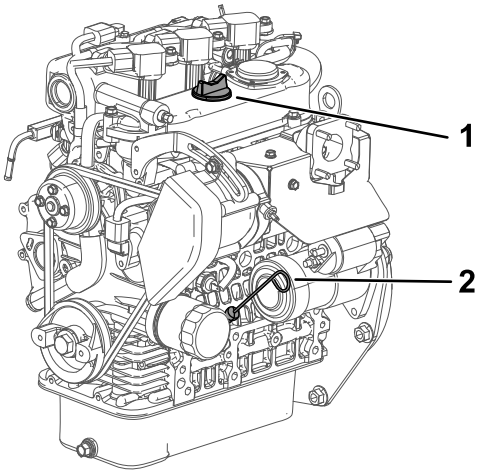

g028637

g028637

Figure 34

1. Filler cap
2. Dipstick

5. Insert the dipstick into the tube and ensure that it seats fully (Figure 34).
6. Remove dipstick and check the oil level (Figure 34).
7. If the oil level is low, remove the filler cap (Figure 34), and add enough oil to raise the level to the Full mark on the dipstick.

   Note: When adding oil, remove dipstick to allow proper venting. Pour the oil slowly and check the level often during this process. **Do not overfill the engine with oil.**

   Important: **When adding engine oil or filling oil, there must be clearance between the oil fill device and the oil fill hole in the valve cover as shown in Figure 35. This clearance is necessary to permit venting when filling, which prevents oil from overrunning into the breather.**

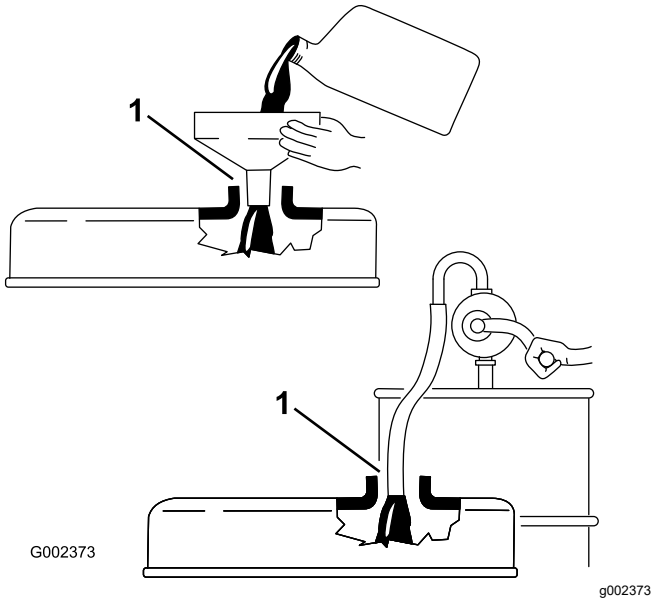

Figure 35

1. Note the clearance between the fill device and the oil-fill neck.

8. Install the dipstick firmly in place (Figure 34).

Changing the Engine Oil and Filter

Service Interval: After the first 50 hours

Every 200 hours

1. Raise the bed and place the safety support on the extended lift cylinder to hold up the bed.
2. Remove the drain plug and let the oil flow into a drain pan (Figure 36).

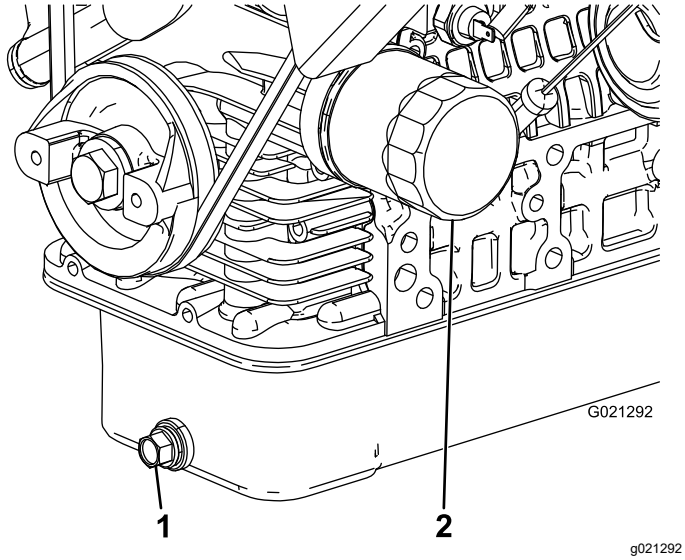

Figure 36

1. Engine-oil-drain plug
2. Engine-oil filter

3. When the oil stops, install the drain plug.
4. Remove the oil filter (Figure 36).
5. Apply a light coat of clean oil to the new filter seal before screwing it on.
6. Screw the filter on until the gasket contacts the mounting plate. Then tighten the filter 1/2 to 2/3 of a turn.

   Note: Do not overtighten.
7. Add the specified oil to the crankcase.

Responding to a Check-Engine Light

Note: Engine-fault code information can be accessed by your Toro commercial products service staff only.

1. Park the machine on a level surface.
2. Engage the parking brake.
3. Shut off the engine and remove the key.
4. Contact your Authorized Service Dealer.

Replacing the Spark Plugs

Service Interval: Every 100 hours/Yearly (whichever comes first) Replace the spark plugs if necessary.

Type: NGK-R BKR5E (or equivalent)

Air Gap: 0.81 mm (0.032 inch)

Important: **A cracked, fouled, dirty, or malfunctioning spark plug must be replaced. Do not sand-blast, scrape, or clean electrodes by using a wire brush because grit may eventually release from the plug and fall into the cylinder. The result is usually a damaged engine.**

1. Clean the area around the spark plug so that foreign matter cannot fall into the cylinder when you remove the spark plug.
2. Pull the wire off the terminal of the spark plug.
3. Remove the plug from the cylinder head.
4. Check the condition of the side electrode, center electrode, and center electrode insulator to ensure that there is no damage (Figure 37).

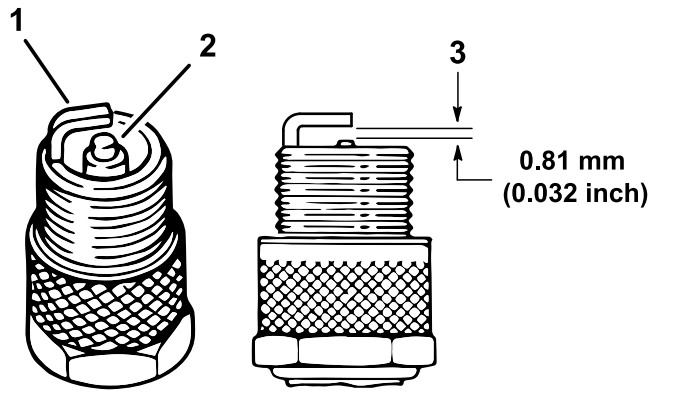

Figure 37

1. Side electrode
2. Center electrode insulator
3. Air gap (not to scale)

5. Set the air gap between the center and side of the electrodes at 0.81 mm (0.032 inch) as shown in Figure 37.
6. Install the spark plug into the cylinder head, and torque the plug to 24.5 to 29 N·m (18 to 22 ft-lb).
7. Install the spark-plug wire.
8. Repeat steps 1 through 7 for the other spark plug.

Fuel System Maintenance

Replacing the Fuel Filter

Service Interval: Every 400 hours

1. Raise the bed and place the safety support on the extended-lift cylinder to hold up the bed.
2. Unplug the wire-harness connectors from the fuel pump (Figure 38).
3. Loosen the hose clamp and disconnect the fuel line from the fuel-pump cap (Figure 38).

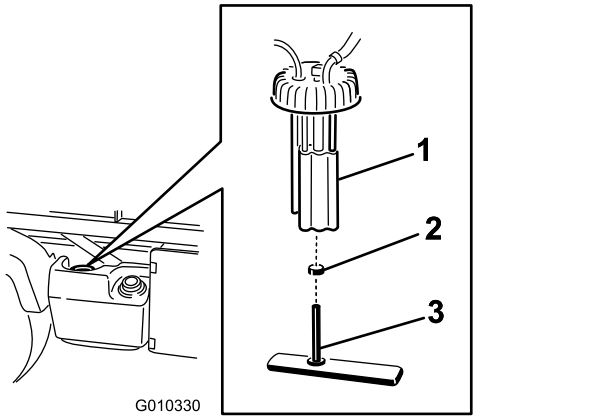

Figure 38

1. Fuel pump
2. Hose clamp
3. Fuel line/fuel filter

4. Remove the fuel-pump cap from the top of the fuel tank (Figure 38).

   Important: **Do not allow the fuel-pump assembly to rotate in the tank while removing the fuel pump. Damage to the float assembly can occur if the fuel pump rotates inside the fuel tank.**
5. Remove the fuel-pump assembly and the fuel filter from the tank (Figure 38).
6. Remove the clamp securing the fuel filter hose to the fuel-pump fitting.
7. Remove the hose from the fitting (Figure 38).
8. Insert the new hose clamp onto the new fuel-filter hose.
9. Insert the hose onto the fuel pump and secure the clamp.
10. Insert the assembly into the fuel tank, and tighten the cap to 20 to 22 N·m (175 to 200 in-lb).
11. Connect the wires and secure the hose with the hose clamp.

Inspecting Fuel Lines and Connections

Service Interval: Every 400 hours/Yearly (whichever comes first)

Inspect the fuel lines, fittings, and clamps for signs of leaking, deterioration, damage, or loose connections.

Note: Repair any damaged or leaking fuel system component before using the machine.

Electrical System Maintenance

Electrical System Safety

- Disconnect the battery before repairing the machine. Disconnect the negative terminal first and the positive last. Connect the positive terminal first and the negative last.
- Charge the battery in an open, well-ventilated area, away from sparks and flames. Unplug the charger before connecting or disconnecting the battery. Wear protective clothing and use insulated tools.

Servicing the Fuses

The fuses for the electrical system are located under the center of the dash panel (Figure 39 and Figure 40).

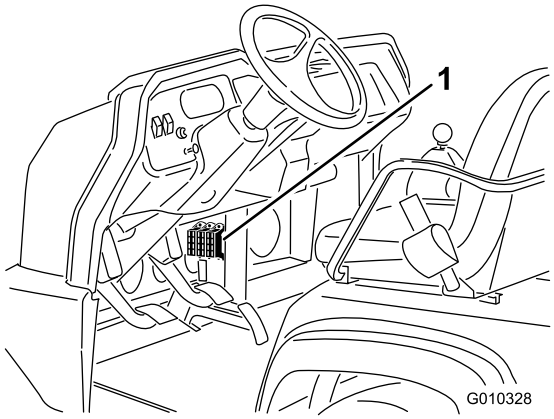

g010328

Figure 39

1. Fuses

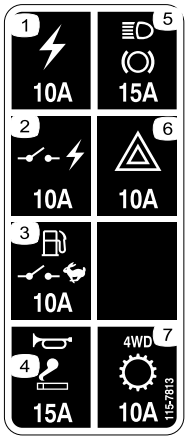

decal115-7813

Figure 40

1. Power outlet (10 A)
2. Switched power (10 A)
3. Fuel pump/supervisor switch (10 A)
4. Horn/power point (15 A)
5. Lights/brake (15 A)
6. Hazard lights (10 A)
7. 4WD/transmission (10 A)

Jump-Starting the Machine

⚠ WARNING

Jump-starting can be dangerous. To avoid personal injury or damage to electrical components in machine, observe the following warnings:

- **Never jump-start with a voltage source greater than 15 V DC; this damages the electrical system.**
- **Never attempt to jump-start a discharged battery that is frozen. It could rupture or explode during jump-starting.**
- **Observe all battery warnings while jump-starting your machine.**
- **Be sure your machine is not touching the jump-start machine.**
- **Connecting cables to the wrong post could result in personal injury and/or damage to the electrical system.**

1. Squeeze the battery cover to release the tabs from the battery base and remove the battery cover from the battery base (Figure 41).

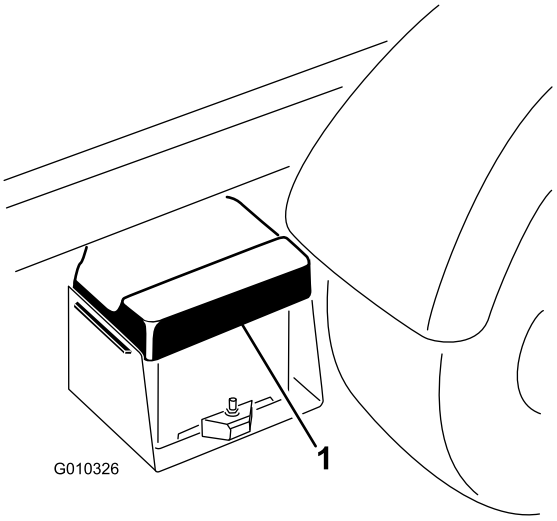

g010326

Figure 41

1. Battery cover

2. Connect a jumper cable between the positive posts of the 2 batteries (Figure 42).

   Note: The positive post may be identified by a + sign on top of the battery cover.

3. Connect 1 end of the other jumper cable to the negative terminal of the battery in the other machine.

   Note: The negative terminal has “NEG” on the battery cover.

   Note: Do not connect the other end of the jumper cable to the negative post of the discharged battery. Connect the jumper cable to the engine or frame. Do not connect the jumper cable to the fuel system.

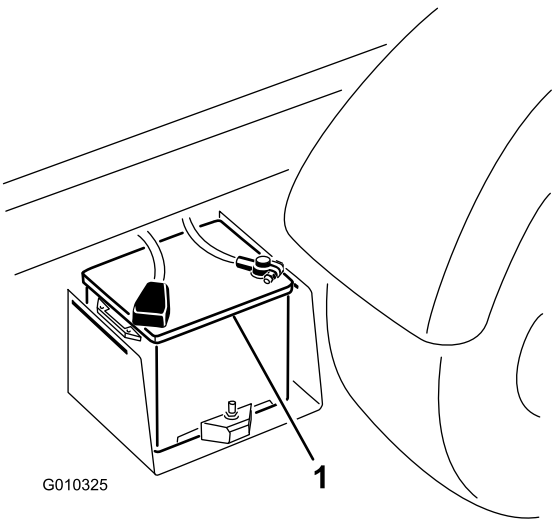

g010325

Figure 42

1. Battery

4. Start the engine in the machine providing the jump-start.

   Note: Let it run for a few minutes, then start your engine.

5. Remove the negative jumper cable first from your engine, then the battery in the other machine.
6. Install the battery cover to the battery base.

Servicing the Battery

Service Interval: Every 50 hours—Check the battery-fluid level (every 30 days if in storage).

Every 50 hours—Check the battery cable connections.

⚠ DANGER

Battery electrolyte contains sulfuric acid, which is fatal if consumed and causes severe burns.

- **Do not drink electrolyte or allow it to contact your skin, eyes or clothing. Wear safety glasses to shield your eyes and rubber gloves to protect your hands.**
- **Fill the battery where clean water is always available for flushing the skin.**

- Always keep the battery clean and fully charged.
- If the battery terminals are corroded, clean them with a solution of 4 parts water and 1 part baking soda.
- Apply a light coating of grease to the battery terminals to prevent corrosion.
- Maintain the battery electrolyte level.
- Keep the top of the battery clean by washing it periodically with a brush dipped in ammonia or bicarbonate of soda solution. Flush the top surface with water after cleaning. Do not remove the fill cap while cleaning.
- Ensure that the battery cables are kept tight on the terminals to provide good electrical contact.
- Maintain the cell electrolyte level with distilled or demineralized water. Do not fill the cells above the bottom of the fill ring inside each cell.
- If you store the machine in a location where temperatures are extremely high, the battery runs down more rapidly than if the machine is stored in a location where temperatures are cool.

Drive System Maintenance

Checking the Front Differential-Oil Level

4-Wheel Drive Models Only

Service Interval: Every 100 hours/Monthly (whichever comes first)—Check the level of the front differential oil (4-wheel drive models only).

1. Park the machine on a level surface.
2. Engage the parking brake.
3. Shut off the engine and remove the key.
4. Clean the area around the fill/check plug on side of the differential (Figure 43).

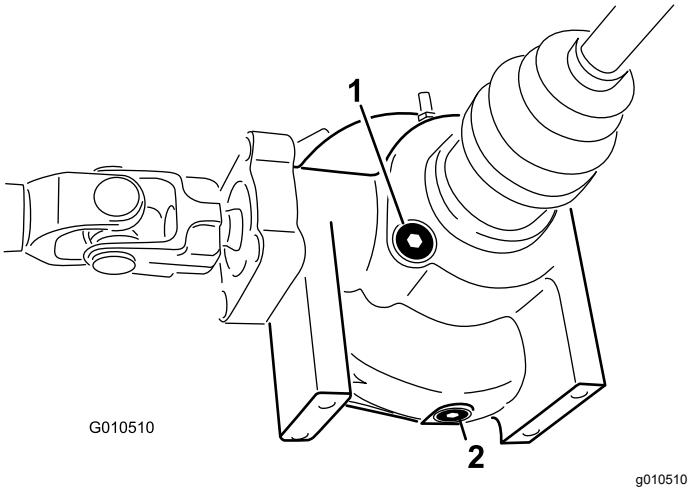

Figure 43

1. Fill/check plug
2. Drain plug

5. Remove the fill/check plug and check the level of the oil.

   Note: The oil should be up to hole.

6. If the oil is low, add specified oil.
7. Install the fill/check plug.

Changing the Front Differential Oil

4-Wheel Drive Models Only

Service Interval: Every 800 hours (4-wheel drive models only).

Differential oil specification: Mobil 424 hydraulic fluid

1. Park the machine on a level surface.
2. Engage the parking brake.
3. Shut off the engine and remove the key.
4. Clean the area around the drain plug on the side of the differential (Figure 43).
5. Place a drain pan under the drain plug.
6. Remove the drain plug and let the oil flow into the drain pan.
7. Install and tighten the plug when the oil stops draining.
8. Clean the area around the fill/check plug on the bottom of the differential.
9. Remove the fill/check plug and add specified oil until the oil level is up to the hole.
10. Install the fill/check plug.

Inspecting the Constant-Velocity Boot

4-Wheel Drive Models Only

Service Interval: Every 200 hours (4-wheel drive models only).

Inspect the constant-velocity boot for cracks, holes, or a loose clamp. Contact your Authorized Service Dealer for repair if you find any damage.

Adjusting the Shift Cables

Service Interval: After the first 10 hours

Every 200 hours

1. Move the shift lever to the NEUTRAL position.
2. Remove the clevis pins securing the shift cables to the transaxle-shift arms (Figure 44).

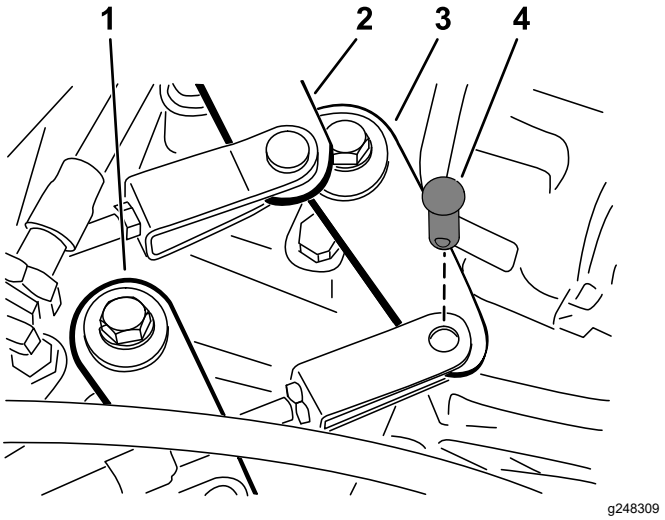

Figure 44

1. Shift arm (High to Low)
2. Shift arm (Second to Third)
3. Shift arm (First to Reverse)
4. Clevis pin

3. Loosen the clevis jam nuts and adjust each clevis, so that the cable free play is equal forward and backward relative to the hole in the transaxle-shift arm (with the transaxle lever free play taken up in the same direction).
4. Install the clevis pins and tighten the jam nuts when finished.

Adjusting the High-Low Cable

Service Interval: Every 200 hours

1. Remove the clevis pin securing the high-low cable to the transaxle (Figure 44).
2. Loosen the clevis jam nut and adjust the clevis so that the clevis hole aligns with the hole in the transaxle bracket.
3. Install the clevis pin and tighten the jam nut when finished.

Adjusting Differential-Lock Cable

Service Interval: Every 200 hours

1. Move the differential-lock lever to the OFF position.
2. Loosen the jam nuts securing the differential-lock cable to the bracket on the transaxle (Figure 45).

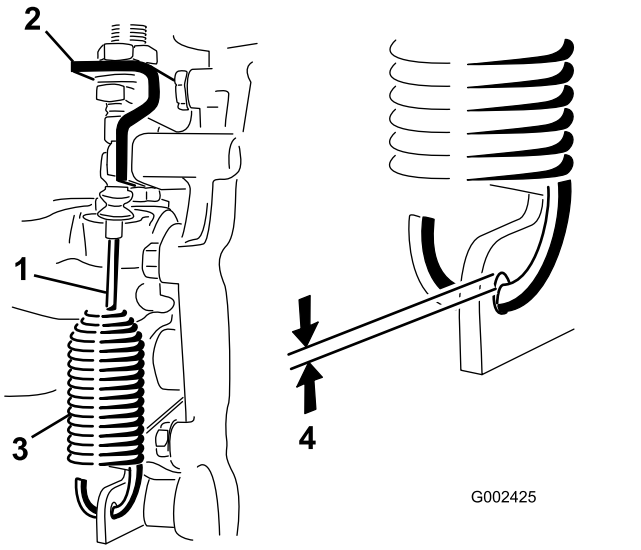

Figure 45

1. Differential-lock cable
2. Transaxle bracket
3. Spring
4. 0.25 to 1.5 mm (0.01 to 0.06 inch) gap

3. Adjust the jam nuts to obtain a 0.25 to 1.5 mm (0.01 to 0.06 inch) gap between the spring hook and the OD of the hole in the transaxle lever.
4. Tighten the jam nuts when finished.

Inspecting the Tires

Service Interval: Every 100 hours

Front tires air pressure specification: 220 kPa (32 psi)

Rear tires air pressure specification: 124 kPa (18 psi)

Operating accidents, such as hitting curbs, can damage a tire or rim and also disrupt wheel alignment, so inspect the tire condition after an accident.

Important: **Check the tire pressure frequently to ensure proper inflation. If the tires are not inflated to the correct pressure, the tires will wear prematurely and may cause 4-wheel drive to bind.**

Figure 46 is an example of tire wear caused by under-inflation.

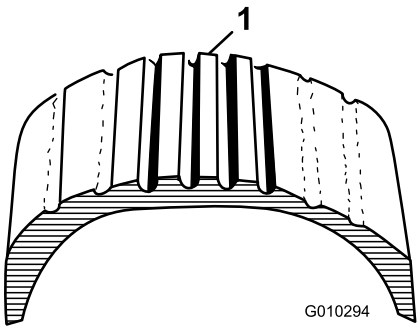

Figure 46

1. Under-inflated tire

Figure 47 is an example of tire wear caused by over-inflation.

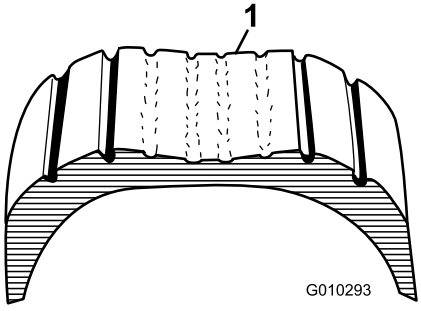

Figure 47

1. Over-inflated tire

Checking the Front Wheel Alignment

Service Interval: Every 400 hours/Yearly (whichever comes first)

1. Ensure that the tire pressures are correct before checking the front wheel alignment; refer to Checking the Tire Pressure (page 20).
2. Either have an operator in the operator's seat or add weight to the driver's seat equal to the average operator of the vehicle.

   The operator or weight must remain on the seat for the duration of the front wheel alignment procedure.
3. On a level surface, roll the machine straight back 2 to 3 m (6 to 10 ft) and then straight forward to the original starting position.

   This allows the machine suspension to settle into the normal operating position.
4. Ensure that the tires are facing straight ahead.
5. Measure the distance between the front tires at axle height at both the front and rear of the tires (Figure 48).

   The front wheel toe-in should be 0 ± 6 mm (0 ± 1/4 inch).

   Important: **Check the measurements at consistent locations on the tire. The machine should be on a flat surface with the tires facing straight ahead.**

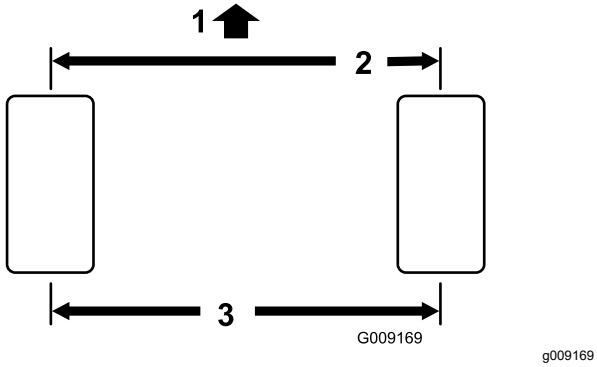

g009169

Figure 48

1. Front of the machine
2. 0 ± 6 mm (0 ± 1/4 inch) front to rear of the tire
3. Center-to-center distance

6. If the front wheel toe-in is incorrect, adjust it as follows:

   A. Loosen the jam nut at the center of the tie rod (Figure 49).

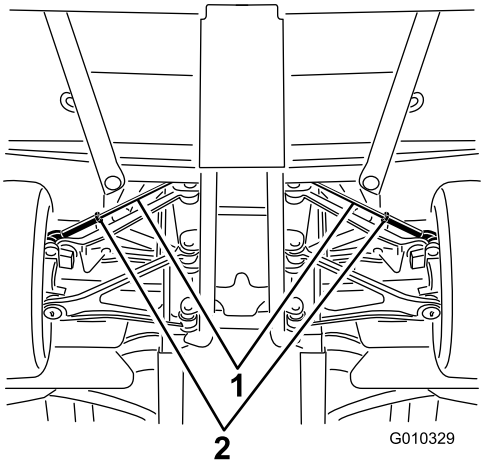

g010329

Figure 49

1. Tie rods
2. Jam nuts

   B. Rotate both tie rods equally to move the front of the tires inward or outward.

   C. Tighten the tie rod jam nuts when the toe-in adjustment is correct.

      Torque the tie rod jam nuts to 62 to 74 N·m (45 to 55 ft-lb).
7. After completing the toe-in adjustment, ensure that there is full steering travel in both directions.

   There should be no contact between any machine components as you move the wheels from lock to lock. If necessary, adjust any components.

Torquing the Wheel Lug Nuts

Service Interval: After the first 2 hours

After the first 10 hours

Every 200 hours

Wheel lug nut torque specification: 109 to 122 N·m (80 to 90 ft-lb)

Torque the lug nuts at the front and rear wheels in a crossing pattern as shown in Figure 50 to the specified torque.

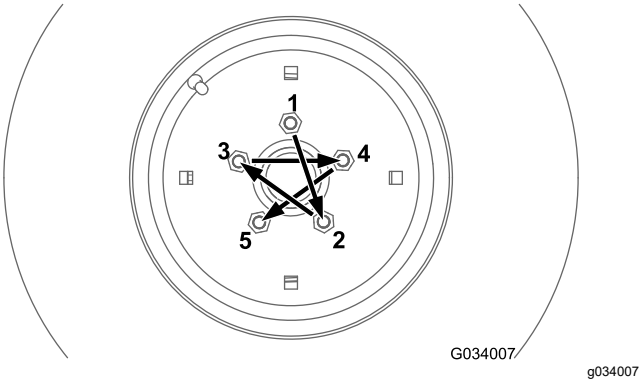

Figure 50

Cooling System Maintenance

Cooling System Safety

- Swallowing engine coolant can cause poisoning; keep out of reach from children and pets.
- Discharge of hot, pressurized coolant or touching a hot radiator and surrounding parts can cause severe burns.
  - Always allow the engine to cool at least 15 minutes before removing the radiator cap.
  - Use a rag when opening the radiator cap, and open the cap slowly to allow steam to escape.
- Do not operate the machine without the covers in place.
- Keep your fingers, hands and clothing clear of rotating fan and drive belt.
- Shut off the engine and remove the key before performing maintenance.

Checking the Engine-Coolant Level

Service Interval: Before each use or daily

Cooling-system capacity: 3.7 L (4 US qt)

Coolant type: a 50/50 solution of water and permanent ethylene-glycol antifreeze.

⚠ CAUTION

If the engine has been running, the pressurized, hot coolant can escape and cause burns.

- **Do not open the radiator cap.**
- **Allow the engine to cool for at least 15 minutes or until the reserve tank is cool enough to touch without burning your hand.**
- **Use a rag when opening the reserve-tank cap, and open the cap slowly to allow steam to escape.**
- **Do not check the coolant level at the radiator, as this damages the engine; only check the coolant level at the reserve tank.**

1. Park the machine on a level surface.
2. Engage the parking brake.
3. Shut off the engine and remove the key.
4. Check the coolant level inside the reserve tank (Figure 51).

Note: The coolant should be up to the bottom of the filler neck when the engine is cold.

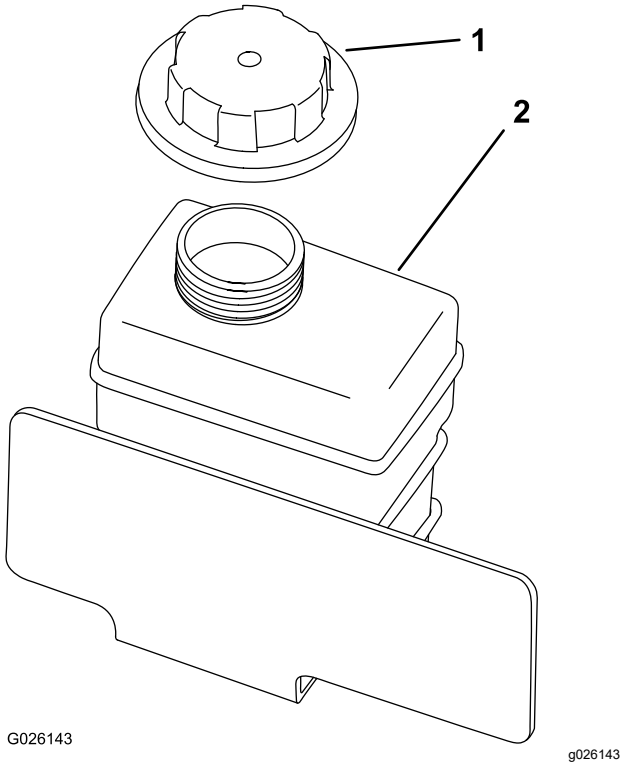

Figure 51

1. Reserve-tank cap
2. Reserve tank

5. If the coolant is low, remove the reserve-tank cap and add a 50/50 mixture of water and permanent ethylene-glycol antifreeze.

   Note: Do not overfill the reserve tank with coolant.

6. Install the reserve-tank cap.

Removing Debris from the Cooling System

Service Interval: Before each use or daily—Remove debris from the engine area and radiator. (Clean it more frequently in dirty conditions.)

1. Park the machine on a level surface.
2. Engage the parking brake.
3. Shut off the engine and remove the key.
4. Clean the engine area thoroughly of all debris.
5. Unlatch and remove the radiator screen from the front of the radiator (Figure 52).

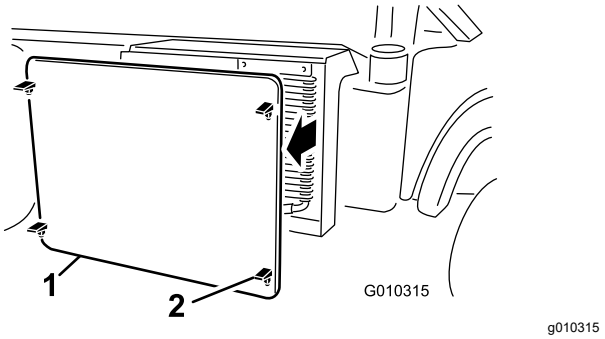

Figure 52

1. Radiator screen
2. Latch

6. If equipped, rotate the latches and pivot the oil cooler away from the radiator (Figure 53).

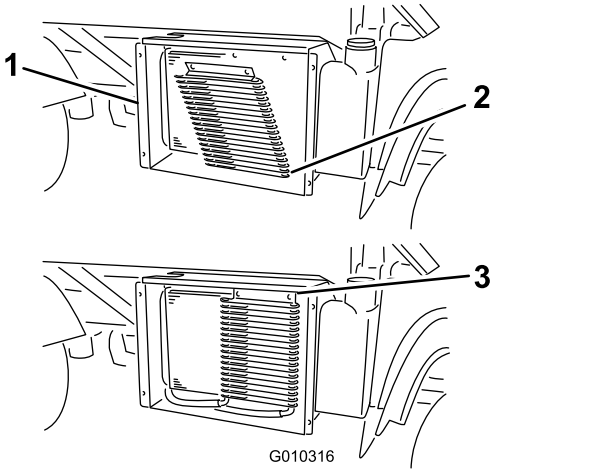

Figure 53

1. Radiator housing
2. Oil cooler
3. Latches

7. Clean the radiator, oil cooler, and screen with compressed air.

   Note: Blow debris away from the radiator.

8. Install the cooler and screen to the radiator.

Changing the Engine Coolant

Service Interval: Every 1,000 hours/Every 2 years (whichever comes first)

Cooling-system capacity: 3.7 L (4 US qt)

Coolant type: a 50/50 solution of water and permanent ethylene-glycol antifreeze

1. Park the machine on a level surface.
2. Raise the bed and install the bed safety support on the extended lift cylinder to secure the bed.

⚠ CAUTION

If the engine has been running, the cooling system pressurizes with hot coolant that can escape and cause burns.

- **Do not open the radiator cap when the engine is running.**
- **Allow the engine to cool for at least 15 minutes or until the radiator cap is cool enough to touch without burning your hand.**
- **Use a rag to open the radiator cap. Open the cap slowly to allow the steam to escape.**

3. Remove the radiator cap (Figure 54).

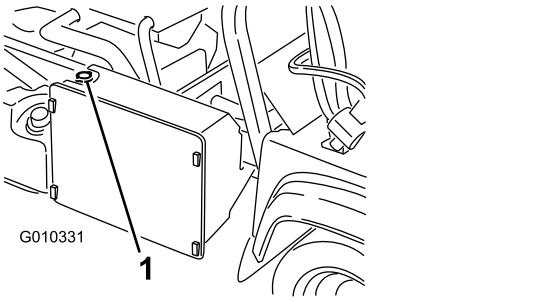

Figure 54

1. Radiator cap

4. Remove the reserve-tank cap (Figure 54).

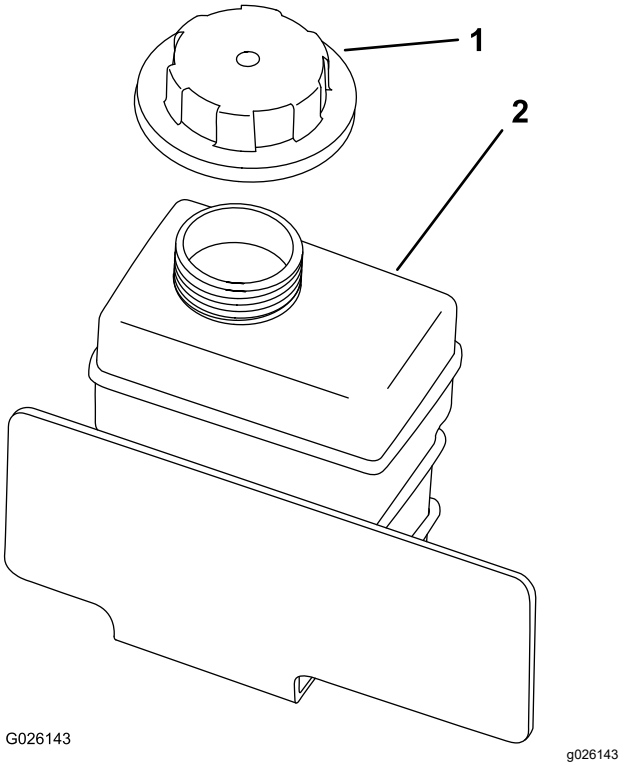

Figure 55

1. Reserve tank-cap
2. Reserve tank

5. Disconnect the lower radiator hose and allow the coolant to flow into a drain pan.

   Note: When the coolant stops flowing, connect the lower radiator hose.

6. Slowly fill the radiator with a 50/50 mixture of water and permanent ethylene-glycol antifreeze
7. Top off the radiator and install the cap (Figure 54).
8. Slowly fill the coolant-reserve tank until level reaches the bottom of the filler neck (Figure 55).
9. Install the reserve-tank cap (Figure 55).
10. Start the engine and operate it until it is warm.
11. Shut off the engine, check the coolant level, and replenish the coolant, if necessary.

Brake Maintenance

Checking the Brake-Fluid Level

Service Interval: Before each use or daily—Check the brake-fluid level. Check the brake-fluid level before you first start the engine.

Every 1,000 hours/Every 2 years (whichever comes first)—Change the brake fluid.

Brake-fluid type: DOT 3

1. Park the machine on a level surface.
2. Engage the parking brake.
3. Shut off the engine and remove the key.
4. Raise the hood to access to the master brake cylinder and reservoir (Figure 56).

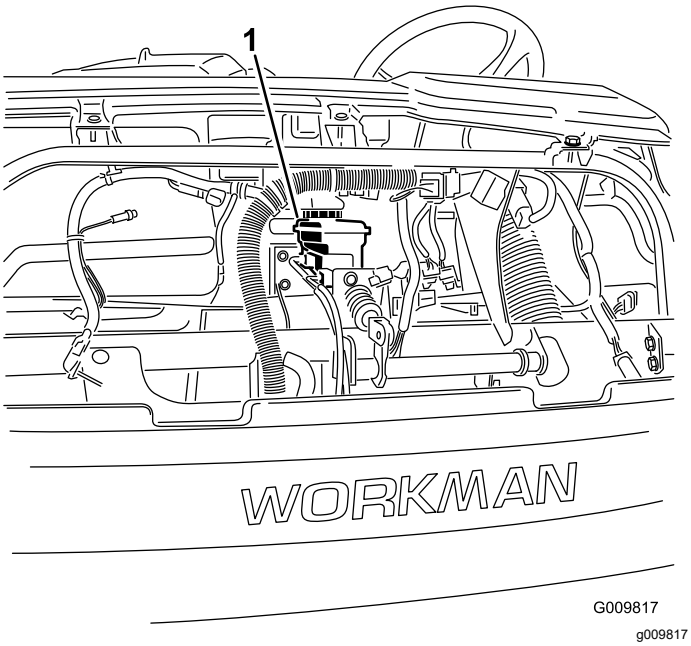

Figure 56

1. Brake-fluid reservoir

5. Ensure that the fluid level is up to the Full line on the reservoir (Figure 57).

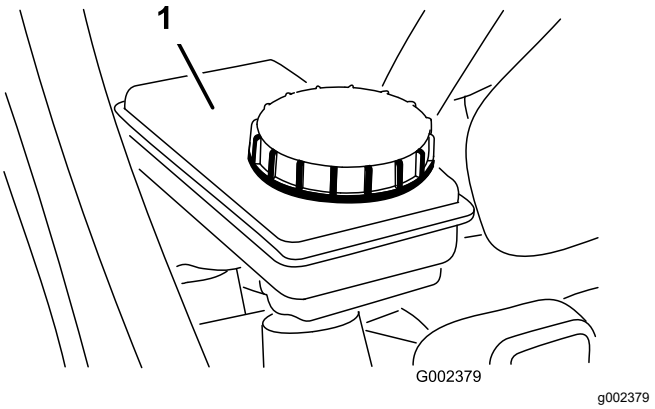

Figure 57

1. Brake-fluid reservoir

6. If the fluid level is low, clean the area around the cap, remove the reservoir cap, and fill the reservoir to the proper level with the specified brake fluid (Figure 57).

   Note: Do not overfill the reservoir with brake fluid.

Adjusting the Parking Brake

Service Interval: After the first 10 hours

Every 200 hours

1. Remove the rubber grip from the parking-brake lever (Figure 58).

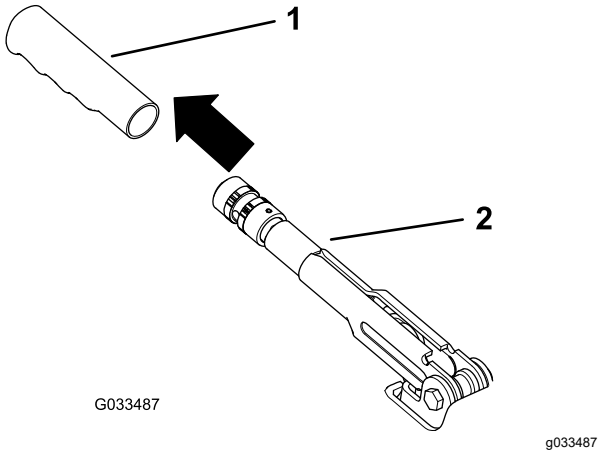

Figure 58

1. Grip
2. Parking-brake lever

2. Loosen the set screw securing the knob to the parking-brake lever (Figure 59).

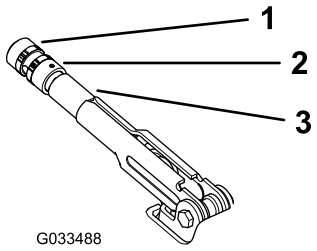

Figure 59

1. Knob
2. Set screw
3. Parking-brake lever

3. Rotate the knob (Figure 59) until a force of 20 to 22 kg (45 to 50 lb) is required to actuate the lever.
4. Tighten the set screw when finished (Figure 59).

   Note: If you can no longer make a parking-brake adjustment by adjusting the parking-brake lever, loosen the handle to the middle of the adjustment and adjust the cable at the rear, then repeat step 3.
5. Install the rubber grip onto the parking-brake lever (Figure 58).

Adjusting the Brake Pedal

Service Interval: Every 200 hours

Note: Remove the font hood to ease the adjustment procedure.

1. Remove the cotter pin and clevis pin securing the master cylinder yoke to the brake-pedal pivot (Figure 60).

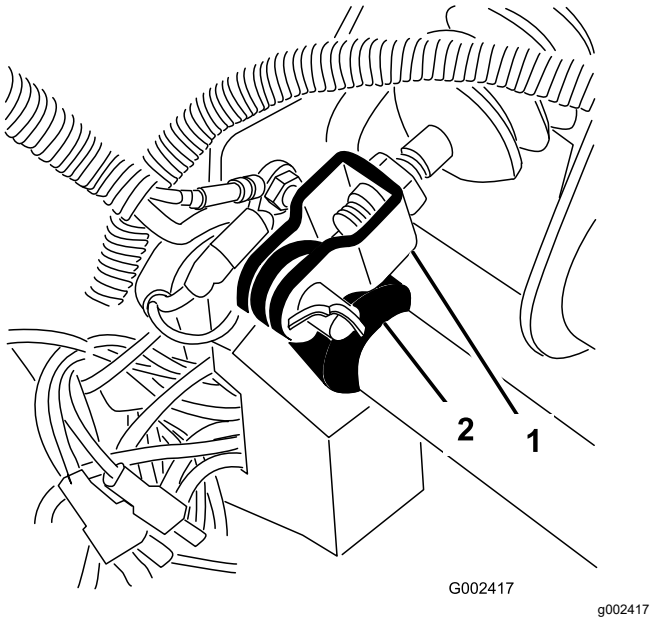

Figure 60

1. Master cylinder yoke
2. Brake-pedal pivot

2. Lift up on the brake pedal (Figure 61) until it contacts the frame.
3. Loosen the jam nuts securing the yoke to the master cylinder shaft (Figure 61).
4. Adjust the yoke until its holes align with the hole in the brake-pedal pivot.
5. Secure the yoke to the pedal pivot with the clevis pin and cotter pin.
6. Tighten the jam nuts securing the yoke to the master cylinder shaft.

   Note: The brake master cylinder must relieve pressure when properly adjusted.

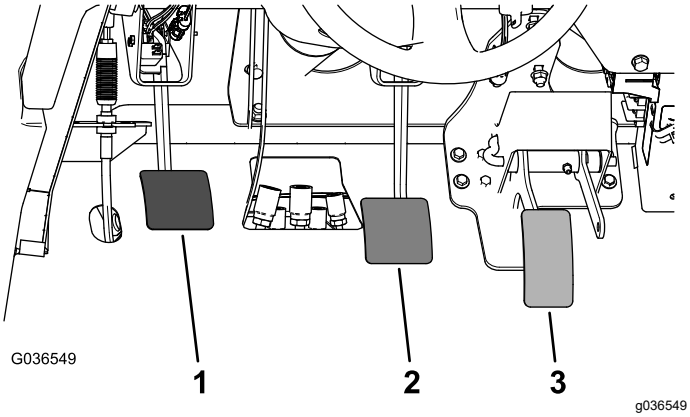

Figure 61

1. Clutch pedal
2. Brake pedal
3. Accelerator pedal

Belt Maintenance

Adjusting the Alternator Belt

Service Interval: After the first 10 hours—Check the condition and tension of the alternator belt.

Every 200 hours—Check the condition and tension of the alternator belt.

1. Raise the bed and position the safety support on the extended lift cylinder to secure the bed.
2. Check the tension by pressing the belt at mid span between the crankshaft and alternator pulleys with 10 kg (22 lb) of force (Figure 62).

   Note: A new belt should deflect 8 to 12 mm (0.3 to 0.5 inch).

   Note: A used belt should deflect 10 to 14 mm (0.4 to 0.55 inch). If the deflection is incorrect, proceed to the next step. If correct, continue operation.
3. To adjust belt tension, perform the following:

   A. Loosen the 2 alternator-mounting bolts (Figure 62).

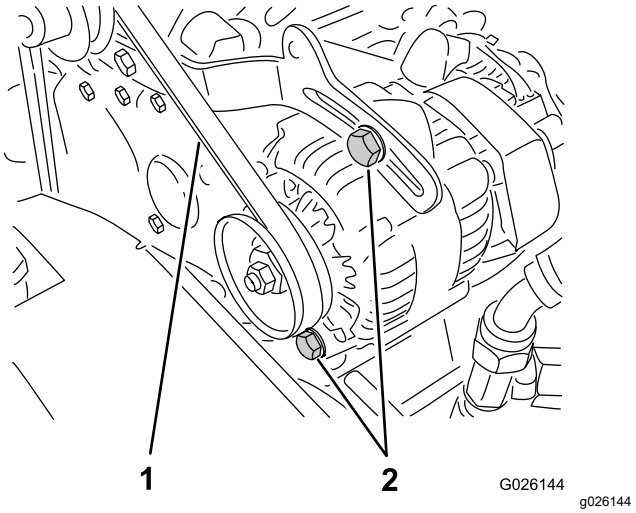

Figure 62

1. Alternator belt
2. Alternator-mounting bolts

   B. Using a pry bar, rotate the alternator until the proper belt tension is attained, then tighten the mounting bolts (Figure 62).

Adjusting the Clutch Pedal

Service Interval: Every 200 hours

Note: You can adjust the clutch-pedal cable at the bell housing or at the clutch-pedal pivot. You can remove the front hood to easily access to the pedal pivot.

1. Loosen the jam nuts securing the clutch cable to the bracket on the bell housing (Figure 63).

   Note: You may remove and rotate the ball joint, if additional adjustment is required.

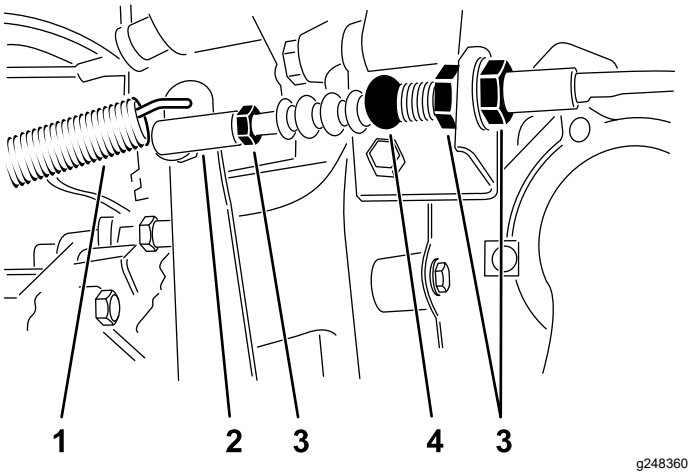

Figure 63

1. Return spring
2. Ball joint
3. Jam nuts
4. Clutch cable

2. Disconnect the return spring from the clutch lever.
3. Adjust the jam nuts or ball joint until the rear edge of the clutch pedal is 9.2 to 9.8 cm (3-5/8 to 3-7/8 inches) from the top of the floor plate diamond pattern, when you apply 1.8 kg (4 lb) of force to the pedal (Figure 64).

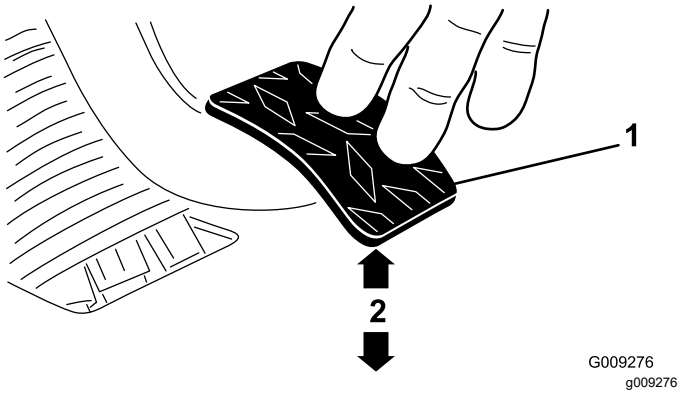

Figure 64

1. Clutch pedal
2. 9.2 to 9.8 cm (3-5/8 to 3-7/8 inches)

   Note: Force is applied so that the clutch-release bearing lightly contacts the pressure-plate fingers.
4. Tighten the jam nuts after you attain the proper adjustment.
5. Check the 9.2 to 9.8 cm (3-5/8 to 3-7/8 inches) dimension after the jam nuts have been tightened to ensure proper adjustment.

   Note: Adjust again, if necessary.
6. Connect the return spring to the clutch lever.

   Important: **Ensure that the rod end is positioned squarely on the ball, not twisted, and remains parallel to the clutch pedal after the jam nut is tightened (Figure 65).**

   Note: The clutch free play should never be less than 19 mm (3/4 inch).

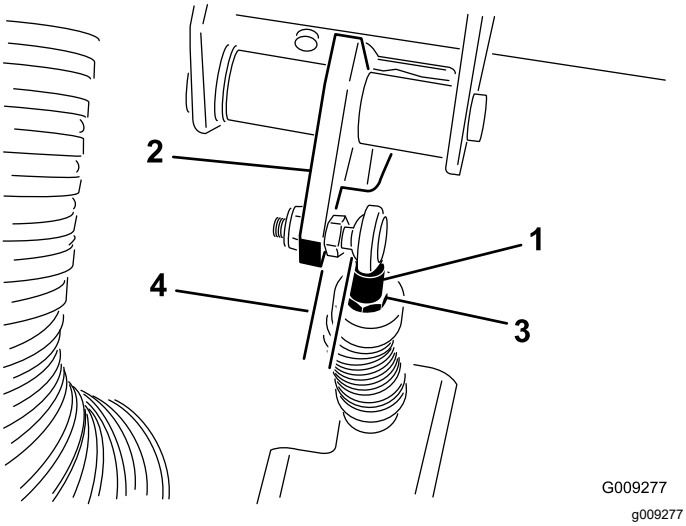

Figure 65

1. Clutch-cable rod end
2. Clutch pedal
3. Rod end jam nut
4. Parallel

Adjusting the Accelerator Pedal

1. Park the machine on a level surface, engage the parking brake, shut off the engine, and remove the key.
2. Adjust the ball joint on the accelerator cable (Figure 66) to allow 2.54 to 6.35 mm (0.100 to 0.250 inch) of clearance between the accelerator pedal arm and the top of the diamond tread floor plate (Figure 67), when you apply 11.3 kg (25 lb) of force to the center of the pedal.

   Note: The engine must not be running and the return spring must be attached.
3. Tighten the locknut (Figure 66).

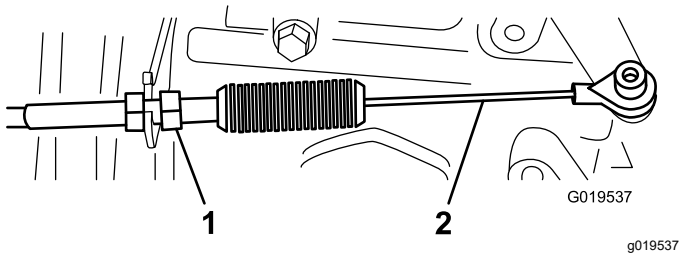

Figure 66

1. Locknut
2. Accelerator cable

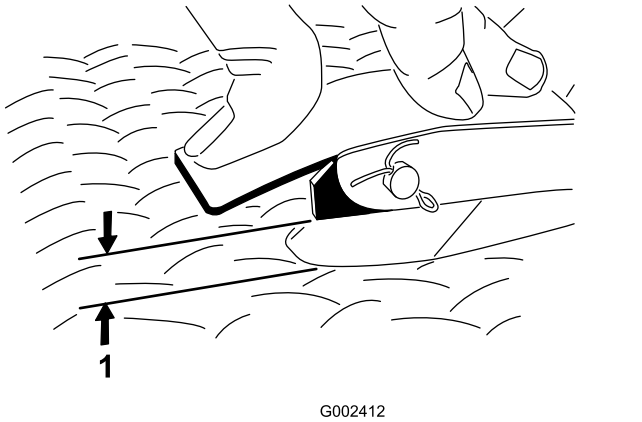

Figure 67

1. 2.54 to 6.35 mm (0.100 to 0.250 inch) clearance

Important: **The maximum high-idle speed is 3,650 rpm. Do not adjust the high-idle stop.**

Hydraulic System Maintenance

Hydraulic System Safety

- Seek immediate medical attention if fluid is injected into skin. Injected fluid must be surgically removed within a few hours by a doctor.
- Before disconnecting or performing any work on the hydraulic system, relieve all pressure in the system by shutting off the engine, cycling the dump valve from raise to lower, and/or lowering the cargo bed and attachments. Place the remote hydraulics lever in the float position. Do not work under a raised bed without the proper bed safety support in place.
- Ensure that all hydraulic-fluid hoses and lines are in good condition and that all hydraulic connections and fittings are tight before applying pressure to the hydraulic system.
- Keep your hands and body away from pinhole leaks or nozzles that eject high-pressure hydraulic fluid.
- Use cardboard or paper to find hydraulic leaks.

Servicing the Transaxle/Hydraulic System

Transaxle/Hydraulic Fluid Specifications

Transaxle-fluid type: Dexron III ATF

Checking the Transaxle/Hydraulic-Fluid Level

Service Interval: Before each use or daily—Check the transaxle/hydraulic-fluid level. (Check the fluid level before the engine is first started and every 8 hours or daily, thereafter.)

1. Park the machine on a level surface.
2. Engage the parking brake.
3. Shut off the engine and remove the key.
4. Clean the area around the dipstick (Figure 68).

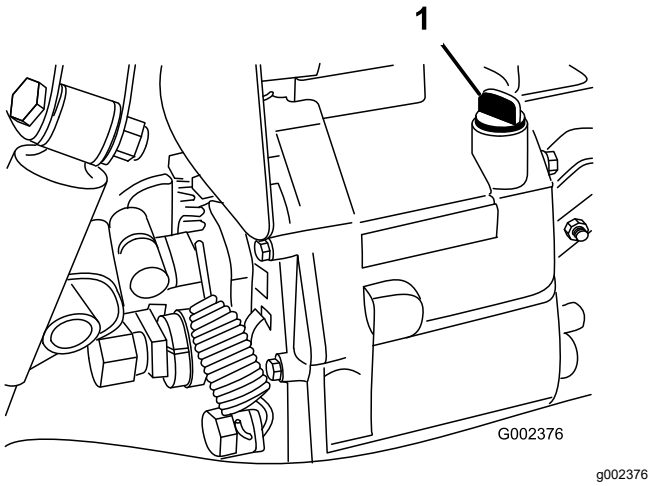

Figure 68

1. Dipstick

5. Unscrew the dipstick from the top of the transaxle and wipe it with a clean rag.
6. Screw the dipstick into the transaxle and ensure that it is fully seated.
7. Unscrew the dipstick and check the fluid level.

   Note: The fluid should be up to top of the flat portion of the dipstick.
8. If the level is low, add enough of the specified fluid to achieve the proper level; refer to Transaxle/Hydraulic Fluid Specifications (page 56).

Changing the Hydraulic Fluid and Cleaning the Strainer

Service Interval: Every 800 hours—Change the hydraulic fluid and clean the strainer.

Hydraulic-fluid capacity: 7 L (7.5 US qt)

1. Park the machine on a level surface.
2. Engage the parking brake.
3. Shut off the engine and remove the key.
4. Remove the drain plug from the side of the reservoir, and let the hydraulic fluid flow into a drain pan (Figure 69).

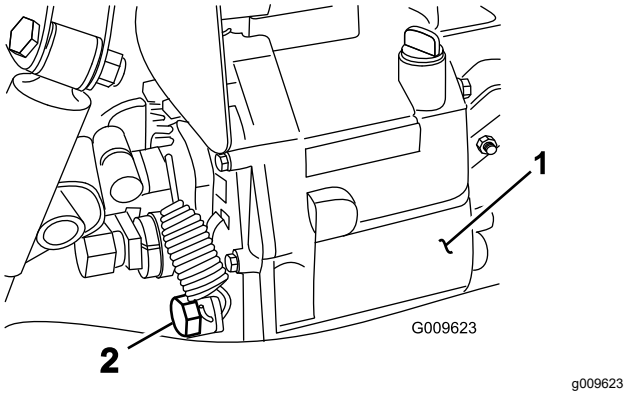

Figure 69

1. Hydraulic reservoir
2. Drain plug

5. Note the orientation of the hydraulic hose and 90° fitting connected to the strainer on the side of the reservoir (Figure 70).
6. Remove the hydraulic hose and 90° fitting.
7. Remove the strainer and clean it by back flushing it with a clean de-greaser.

   Note: Allow it to air dry before installing.

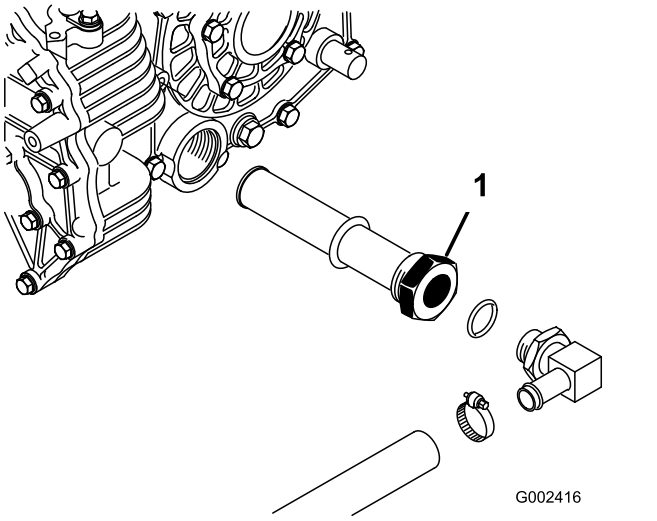

Figure 70

1. Hydraulic strainer

8. Install the strainer.
9. Install the hydraulic hose and 90° fitting to the strainer in the same orientation.
10. Install and tighten the drain plug.
11. Fill the reservoir with approximately 7 L (7.5 US qt) of the specified hydraulic fluid; refer to Checking the Transaxle/Hydraulic-Fluid Level (page 56).
12. Start the engine and operate the machine to fill the hydraulic system.

13. Check the hydraulic-fluid level and replenish it, if required.

Important: **Use only the hydraulic fluid specified. Other fluids could damage the system.**

Replacing the Hydraulic Filter

Service Interval: After the first 10 hours—Replace the hydraulic filter.

Every 800 hours—Replace the hydraulic filter.

Important: **Use of any other filter may void the warranty on some components.**

1. Park the machine on a level surface.
2. Engage the parking brake.
3. Shut off the engine and remove the key.
4. Clean the area around the filter-mounting area.
5. Place a drain pan under the filter and remove the filter (Figure 71).

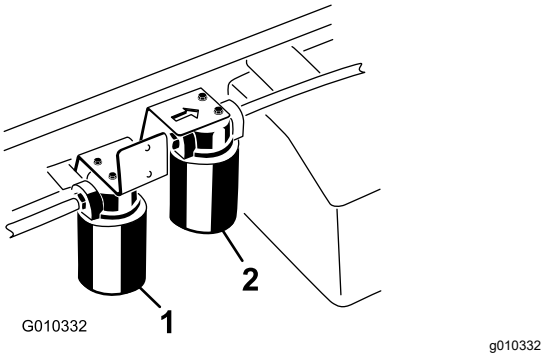

Figure 71

1. Hydraulic filter
2. High-flow hydraulic filter

6. Lubricate the gasket on the new filter.
7. Ensure that the filter mounting area is clean.
8. Screw the filter on until the gasket contacts the mounting plate, and tighten the filter 1/2 turn.
9. Start the engine and let it run for about 2 minutes to purge air from the system.
10. Shut off the engine and check the hydraulic-fluid level and for leaks.

Servicing the High-Flow Hydraulic System

TC Models Only

Hydraulic Fluid Specifications

The reservoir is filled at the factory with high-quality hydraulic fluid. Check the level of the hydraulic fluid before you first start the engine and daily thereafter; refer to Checking the High-Flow Hydraulic-Fluid Level (page 59).

Recommended replacement fluid: Toro PX Extended Life Hydraulic Fluid; available in 19 L (5 US gallon) pails or 208 L (55 US gallon) drums.

Note: A machine using the recommended replacement fluid requires less frequent fluid and filter changes.

Alternative fluids: If Toro PX Extended Life Hydraulic Fluid is not available, you may use another conventional, petroleum-based hydraulic fluid having specifications that fall within the listed range for all the following material properties and that it meets industry standards. Do not use synthetic fluid. Consult with your lubricant distributor to identify a satisfactory product.

Note: Toro does not assume responsibility for damage caused by improper substitutions, so use products only from reputable manufacturers who will stand behind their recommendation.

High Viscosity Index/Low Pour Point Anti-wear Hydraulic Fluid, ISO VG 46

Material Properties:

Viscosity, ASTM D445	cSt @ 40°C (104°F) 44 to 48
Viscosity Index ASTM D2270	140 or higher
Pour Point, ASTM D97	-37°C to -45°C (-34°F to -49°F)
Industry Specifications:	Eaton Vickers 694 (I-286-S, M-2950-S/35VQ25 or M-2952-S)

Note: Many hydraulic fluids are almost colorless, making it difficult to spot leaks. A red dye additive for the hydraulic fluid is available in 20 ml (0.67 fl oz) bottles. A bottle is sufficient for 15 to 22 L (4 to 6 US gallons) of hydraulic fluid. Order Part No. 44-2500 from your authorized Toro distributor.

Checking the High-Flow Hydraulic-Fluid Level

TC Models Only

Service Interval: Before each use or daily—Check the high-flow hydraulic-fluid level (TC models only). (Check the level of hydraulic fluid before the engine is first started, and daily thereafter)

1. Park the machine on a level surface.
2. Engage the parking brake.
3. Shut off the engine and remove the key.
4. Clean the area around the filler neck and the cap of the hydraulic tank (Figure 72).
5. Remove the cap from the filler neck.

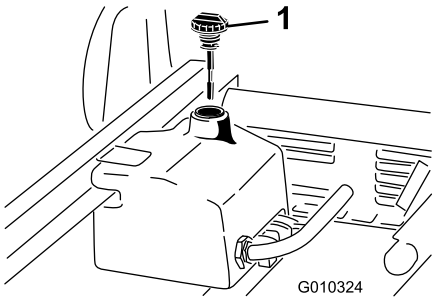

g010324

Figure 72

1. Cap

6. Remove the dipstick (Figure 72) from the filler neck and wipe it with a clean rag.
7. Insert the dipstick into the filler neck, then remove it and check the fluid level.

   Note: The fluid level should be between the 2 marks on the dipstick.
8. If the level is low, add the appropriate fluid to raise the level to the upper mark; refer to Changing the High-Flow Hydraulic Fluid and Filter (page 60).
9. Install the dipstick and cap onto the filler neck.
10. Start the engine and turn on the attachment.

    Note: Let them run for about 2 minutes to purge air from the system.

    Important: **The machine must be running before starting the high-flow hydraulics.**
11. Shut off the engine and attachment and check for leaks.

Changing the High-Flow Hydraulic Fluid and Filter

TC Models Only

Service Interval: Every 1,000 hours—If you are **using** the recommended hydraulic fluid, replace the high-flow hydraulic filter.

Every 2,000 hours—If you are **using** the recommended hydraulic fluid, change the high-flow hydraulic fluid.

Every 800 hours—If you are **not using** the recommended hydraulic fluid or have ever filled the reservoir with an alternative fluid, replace the high-flow hydraulic fluid and filter.

Hydraulic fluid capacity: approximately 15 L (4 US gallons)

1. Park the machine on a level surface.
2. Engage the parking brake.
3. Shut off the engine and remove the key.
4. Clean the area around the high-flow-filter mounting area (Figure 71).
5. Place a drain pan under the filter and remove the filter.

   Note: If the fluid is not going to be drained, disconnect and plug the hydraulic line going to the filter.
6. Lubricate the new filter-sealing gasket and hand turn the filter onto the filter head until the gasket contacts the filter head. Then tighten it 3/4 turn further. The filter should now be sealed.
7. Fill the hydraulic reservoir with approximately 15 L (4 US gallons) of hydraulic fluid.
8. Start the machine and run it at idle for about 2 minutes to circulate the fluid and remove any air trapped in the system.
9. Stop the machine and check the fluid level.
10. Verify the fluid level.
11. Dispose of the fluid properly.

Raising the Cargo Bed in an Emergency

The cargo bed can be raised in an emergency without starting the engine by cranking starter or by jumping the hydraulic system.

Raising the Cargo Bed using the Starter

Crank the starter while holding the lift lever in the Raise position. Run the starter for 10 seconds, then wait 60 seconds before engaging the starter again. If the engine does not crank, you must remove the load and bed (attachment) to service the engine or transaxle.

Raising the Cargo Bed by Jumping the Hydraulic System

⚠ CAUTION

A raised bed full of material without the proper safety support rod may lower unexpectedly. Working under an unsupported raised bed may cause injury to you or others.

- **Before servicing or making adjustments to the machine, park the machine on a level surface, engage the parking brake, shut off the engine, and remove the key.**
- **Remove any load material from the bed or other attachment and insert the safety support on a fully extended cylinder rod before working under a raised bed.**

You will need 2 hydraulic hoses, each with a male and female quick coupler, that fit the machine couplers, to perform this operation.

1. Back another machine up to the rear of the disabled machine.

   Important: **The machine hydraulic system uses Dexron III ATF. To avoid system contamination, make sure that the machine used to jump the hydraulic system uses an equivalent fluid.**
2. On both machine, disconnect the 2 quick-coupler hoses from the hoses secured to the coupler bracket (Figure 73).

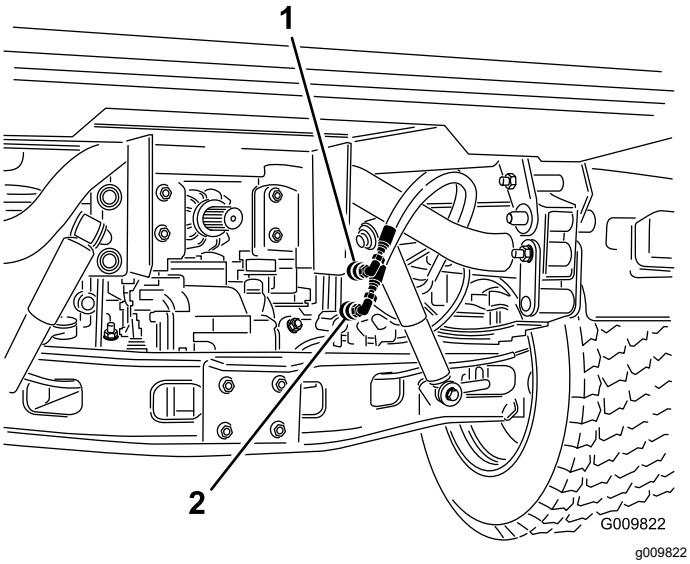

Figure 73

1. Quick-coupler hose A
2. Quick-coupler hose B

3. On the disabled machine, connect the 2 jumper hoses to the hoses that were disconnected (Figure 74).
4. Cap the unused fittings.

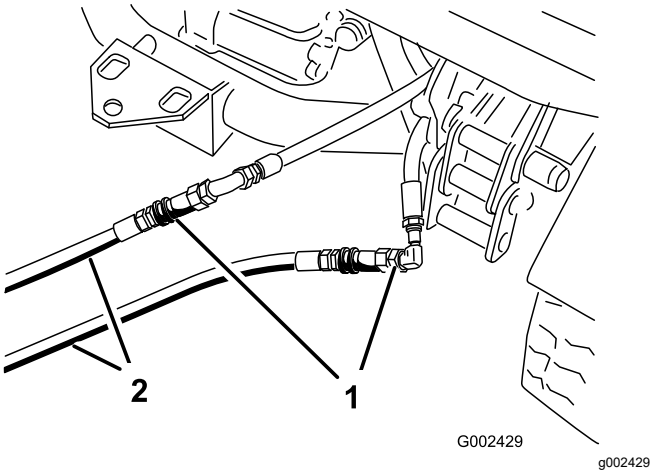

Figure 74

1. Disconnected hoses
2. Jumper hoses

5. On the other machine, connect the 2 hoses to the coupler still in the coupler bracket (connect the top hose to the top coupler and the bottom hose to the bottom coupler) (Figure 75).
6. Cap the unused fittings.

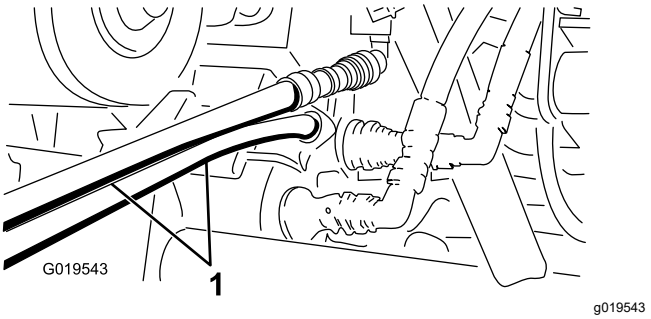

Figure 75

1. Jumper hoses

7. Keep all bystanders away from the machines.
8. Start the second machine and move the lift lever to the raise position, which raises the disabled cargo bed.
9. Move the hydraulic-lift lever to the NEUTRAL position, and engage the lift-lever lock.
10. Install the bed support onto the extended lift cylinder; refer to Using the Bed Support (page 33).

    Note: With both the machine turned off, move the lift lever back and forth to remove the system pressure and ease the disconnection of the quick couplers.
11. After completing the operation, remove the jumper hoses and connect the hydraulic hoses to both machines.

    Important: **Check the hydraulic fluid levels, in both machines, before resuming operation.**

Cleaning

Washing the Machine

Wash the machine as needed using water alone or with a mild detergent. You may use a rag when washing the machine.

Important: **Do not use brackish or reclaimed water to clean the machine.**

Important: **Do not use power-washing equipment to wash the machine. Power-washing equipment may damage the electrical system, loosen important decals, or wash away necessary grease at friction points. Avoid excessive use of water near the control panel, engine, and battery.**

Important: **Do not wash the machine with the engine running. Washing the machine with the engine running may result in internal engine damage.**

Storage

Storage Safety

- Shut off the machine, remove the key, and wait for all movement to stop before you leave the operator's position. Allow the machine to cool before adjusting, servicing, cleaning, or storing it.
- Do not store the machine or fuel container where there is an open flame, spark, or pilot light, such as on a water heater or other appliance.

Storing the Machine

Service Interval: Every 200 hours—Inspect the service and parking brakes.

Every 400 hours—Visually inspect the brakes for worn brake shoes.

After the first 50 hours

Every 600 hours/Yearly (whichever comes first)

1. Position the machine on a level surface, engage the parking brake, shut off the engine, and remove the key.
2. Clean dirt and grime from the entire machine, including the outside of the engine.
3. Inspect the brakes; refer to Adjusting the Parking Brake (page 52).
4. Service the air cleaner; refer to Servicing the Air Cleaner (page 39).
5. Seal the air-cleaner inlet and the exhaust outlet with weatherproof tape.
6. Grease the machine; refer to Greasing the Bearings and Bushings (page 37).
7. Change the engine oil; refer to Changing the Engine Oil and Filter (page 41).
8. Flush the fuel tank with fresh, clean fuel.
9. Secure all fuel system fittings.
10. Check the tire pressure; refer to Checking the Tire Pressure (page 20).
11. Check anti freeze protection and add a 50/50 solution of water and anti freeze as needed for expected minimum temperature in your area.
12. Remove the battery from the chassis, check the electrolyte level, and charge it fully; refer to Servicing the Battery (page 45).

    Note: Do not connect the battery cables to the battery posts during storage.

    Important: **The battery must be fully charged to prevent it from freezing and being damaged at temperatures below 0°C (32°F). A fully charged battery maintains its charge for about 50 days at temperatures lower than 4°C (40°F). If the temperatures will be above 4°C (40°F), check the water level in the battery and charge it every 30 days.**
13. Check and tighten all bolts, nuts, and screws. Repair or replace any part that is damaged.
14. Paint all scratched or bare metal surfaces.

    Note: Paint is available from your Authorized Service Dealer.
15. Store the machine in a clean, dry garage or storage area.
16. Cover the machine to protect it and keep it clean.

Troubleshooting

Problem	Possible Cause	Corrective Action
The engine does not start, starts hard, or fails to keep running.	1. The hydraulic lever is locked in forward position	1. Move the hydraulic lever out of forward position.
	2. The fuel tank is empty.	2. Fill the fuel tank.
	3. The fuel-shutoff valve is closed.	3. Open the fuel-shutoff valve.
	4. The oil level in the crankcase is low.	4. Add oil to the crankcase.
	5. The throttle is not in the correct position.	5. Be sure that the throttle control is midway between the SLOW and FAST positions.
	6. There is dirt, water, or stale fuel is in the fuel system.	6. Contact an Authorized Service Dealer.
	7. The air cleaner is dirty.	7. Clean or replace the air-cleaner element.
	8. The spark plug is fouled or improperly gapped.	8. Adjust or replace the spark plug.
	9. The spark-plug wire is not connected.	9. Check the spark-plug wire connection.
The quick couplers are difficult to connector disconnect.	1. The hydraulic pressure not relieved (the quick coupler is under pressure).	1. Shut off the engine, move the hydraulic-lift lever forward and backward several times, and connect the quick couplers for the fittings in the auxiliary hydraulic panel.
The power steering moves hard.	1. The hydraulic-fluid level is low.	1. Service the hydraulic reservoir.
	2. The hydraulic fluid is hot.	2. Check the hydraulic-fluid level and service if it is low. Contact an Authorized Service Dealer.
	3. The hydraulic pump not operating.	3. Contact an Authorized Service Dealer.
The hydraulic fitting leaks.	1. The fitting is loose.	1. Tighten the fitting.
	2. The hydraulic fitting is missing an O-ring.	2. Install the missing O-ring.
An attachment does not function.	1. The quick couplers are not fully connected.	1. Disconnect the quick couplings, remove and debris from the couplings, connect the couplings. Replace any damaged couplings.
	2. The quick couplers are interchanged.	2. Disconnect the quick couplings, align the couplings to the correct ports on the auxiliary hydraulic panel, connect the couplings.
The engine does not start.	1. The hydraulic-lift lever is locked in the ON position.	1. Set the hydraulic-lift lock to the UNLOCK position, move the hydraulic-lift lever to NEUTRAL, and start the engine.

Notes:

Notes:

California Proposition 65 Warning Information

What is this warning?

You may see a product for sale that has a warning label like the following:



WARNING: Cancer and Reproductive Harm—www.p65Warnings.ca.gov.

What is Prop 65?

Prop 65 applies to any company operating in California, selling products in California, or manufacturing products that may be sold in or brought into California. It mandates that the Governor of California maintain and publish a list of chemicals known to cause cancer, birth defects, and/or other reproductive harm. The list, which is updated annually, includes hundreds of chemicals found in many everyday items. The purpose of Prop 65 is to inform the public about exposure to these chemicals.

Prop 65 does not ban the sale of products containing these chemicals but instead requires warnings on any product, product packaging, or literature with the product. Moreover, a Prop 65 warning does not mean that a product is in violation of any product safety standards or requirements. In fact, the California government has clarified that a Prop 65 warning "is not the same as a regulatory decision that a product is 'safe' or 'unsafe.'" Many of these chemicals have been used in everyday products for years without documented harm. For more information, go to https://oag.ca.gov/prop65/faqs-view-all.

A Prop 65 warning means that a company has either (1) evaluated the exposure and has concluded that it exceeds the "no significant risk level"; or (2) has chosen to provide a warning based on its understanding about the presence of a listed chemical without attempting to evaluate the exposure.

Does this law apply everywhere?

Prop 65 warnings are required under California law only. These warnings are seen throughout California in a wide range of settings, including but not limited to restaurants, grocery stores, hotels, schools, and hospitals, and on a wide variety of products. Additionally, some online and mail order retailers provide Prop 65 warnings on their websites or in catalogs.

How do the California warnings compare to federal limits?

Prop 65 standards are often more stringent than federal and international standards. There are various substances that require a Prop 65 warning at levels that are far lower than federal action limits. For example, the Prop 65 standard for warnings for lead is 0.5 µg/day, which is well below the federal and international standards.

Why don't all similar products carry the warning?

- Products sold in California require Prop 65 labelling while similar products sold elsewhere do not.
- A company involved in a Prop 65 lawsuit reaching a settlement may be required to use Prop 65 warnings for its products, but other companies making similar products may have no such requirement.
- The enforcement of Prop 65 is inconsistent.
- Companies may elect not to provide warnings because they conclude that they are not required to do so under Prop 65; a lack of warnings for a product does not mean that the product is free of listed chemicals at similar levels.

Why does Toro include this warning?

Toro has chosen to provide consumers with as much information as possible so that they can make informed decisions about the products they buy and use. Toro provides warnings in certain cases based on its knowledge of the presence of one or more listed chemicals without evaluating the level of exposure, as not all the listed chemicals provide exposure limit requirements. While the exposure from Toro products may be negligible or well within the "no significant risk" range, out of an abundance of caution, Toro has elected to provide the Prop 65 warnings. Moreover, if Toro does not provide these warnings, it could be sued by the State of California or by private parties seeking to enforce Prop 65 and subject to substantial penalties.

The Toro Warranty

Two-Year or 1,500 Hours Limited Warranty

Conditions and Products Covered

The Toro Company warrants your Toro Commercial product (“Product”) to be free from defects in materials or workmanship for 2 years or 1,500 operational hours*, whichever occurs first. This warranty is applicable to all products with the exception of Aerators (refer to separate warranty statements for these products). Where a warrantable condition exists, we will repair the Product at no cost to you including diagnostics, labor, parts, and transportation. This warranty begins on the date the Product is delivered to the original retail purchaser.
* Product equipped with an hour meter.

Instructions for Obtaining Warranty Service

You are responsible for notifying the Commercial Products Distributor or Authorized Commercial Products Dealer from whom you purchased the Product as soon as you believe a warrantable condition exists. If you need help locating a Commercial Products Distributor or Authorized Dealer, or if you have questions regarding your warranty rights or responsibilities, you may contact us at:

Toro Commercial Products Service Department
8111 Lyndale Avenue South
Bloomington, MN 55420-1196

952–888–8801 or 800–952–2740
E-mail: commercial.warranty@toro.com

Owner Responsibilities

As the product owner, you are responsible for required maintenance and adjustments stated in your *Operator's Manual*. Repairs for product issues caused by failure to perform required maintenance and adjustments are not covered under this warranty.

Items and Conditions Not Covered

Not all product failures or malfunctions that occur during the warranty period are defects in materials or workmanship. This warranty does not cover the following:

- Product failures which result from the use of non-Toro replacement parts, or from installation and use of add-on, or modified non-Toro branded accessories and products.
- Product failures which result from failure to perform recommended maintenance and/or adjustments.
- Product failures which result from operating the Product in an abusive, negligent, or reckless manner.
- Parts consumed through use that are not defective. Examples of parts which are consumed, or used up, during normal Product operation include, but are not limited to, brake pads and linings, clutch linings, blades, reels, rollers and bearings (sealed or greasable), bed knives, spark plugs, castor wheels and bearings, tires, filters, belts, and certain sprayer components such as diaphragms, nozzles, flow meters, and check valves.
- Failures caused by outside influence, including, but not limited to, weather, storage practices, contamination, use of unapproved fuels, coolants, lubricants, additives, fertilizers, water, or chemicals.
- Failure or performance issues due to the use of fuels (e.g. gasoline, diesel, or biodiesel) that do not conform to their respective industry standards.
- Normal noise, vibration, wear and tear, and deterioration. Normal “wear and tear” includes, but is not limited to, damage to seats due to wear or abrasion, worn painted surfaces, scratched decals or windows.

Parts

Parts scheduled for replacement as required maintenance are warranted for the period of time up to the scheduled replacement time for that part. Parts replaced under this warranty are covered for the duration of the original product warranty and become the property of Toro. Toro will make the final decision whether to repair any existing part or assembly or replace it. Toro may use remanufactured parts for warranty repairs.

Deep Cycle and Lithium-Ion Battery Warranty

Deep cycle and Lithium-Ion batteries have a specified total number of kilowatt-hours they can deliver during their lifetime. Operating, recharging, and maintenance techniques can extend or reduce total battery life. As the batteries in this product are consumed, the amount of useful work between charging intervals will slowly decrease until the battery is completely worn out. Replacement of worn out batteries, due to normal consumption, is the responsibility of the product owner.
Note: (Lithium-Ion battery only): Refer to the battery warranty for additional information.

Lifetime Crankshaft Warranty (ProStripe 02657 Model Only)

The Prostripe which is fitted with a genuine Toro Friction Disc and Crank-Safe Blade Brake Clutch (integrated Blade Brake Clutch (BBC) + Friction Disc assembly) as original equipment and used by the original purchaser in accordance with recommended operating and maintenance procedures, are covered by a Lifetime Warranty against engine crankshaft bending. Machines fitted with friction washers, Blade Brake Clutch (BBC) units and other such devices are not covered by the Lifetime Crankshaft Warranty.

Maintenance is at Owner’s Expense

Engine tune-up, lubrication, cleaning and polishing, replacement of filters, coolant, and completing recommended maintenance are some of the normal services Toro products require that are at the owner’s expense.

General Conditions

Repair by an Authorized Toro Distributor or Dealer is your sole remedy under this warranty.

The Toro Company is not liable for indirect, incidental or consequential damages in connection with the use of the Toro Products covered by this warranty, including any cost or expense of providing substitute equipment or service during reasonable periods of malfunction or non-use pending completion of repairs under this warranty. Except for the Emissions warranty referenced below, if applicable, there is no other express warranty. All implied warranties of merchantability and fitness for use are limited to the duration of this express warranty.

Some states do not allow exclusions of incidental or consequential damages, or limitations on how long an implied warranty lasts, so the above exclusions and limitations may not apply to you. This warranty gives you specific legal rights, and you may also have other rights which vary from state to state.

Note Regarding Emissions Warranty

The Emissions Control System on your Product may be covered by a separate warranty meeting requirements established by the U.S. Environmental Protection Agency (EPA) and/or the California Air Resources Board (CARB). The hour limitations set forth above do not apply to the Emissions Control System Warranty. Refer to the Engine Emission Control Warranty Statement supplied with your product or contained in the engine manufacturer’s documentation.

Countries Other than the United States or Canada

Customers who have purchased Toro products exported from the United States or Canada should contact their Toro Distributor (Dealer) to obtain guarantee policies for your country, province, or state. If for any reason you are dissatisfied with your Distributor's service or have difficulty obtaining guarantee information, contact your Authorized Toro Service Center.