1975

FORM NO. 3310-709

TORO®

MODEL NO. 58235 – 500001 AND UP

PARTS CATALOG

5 H.P. Tiller

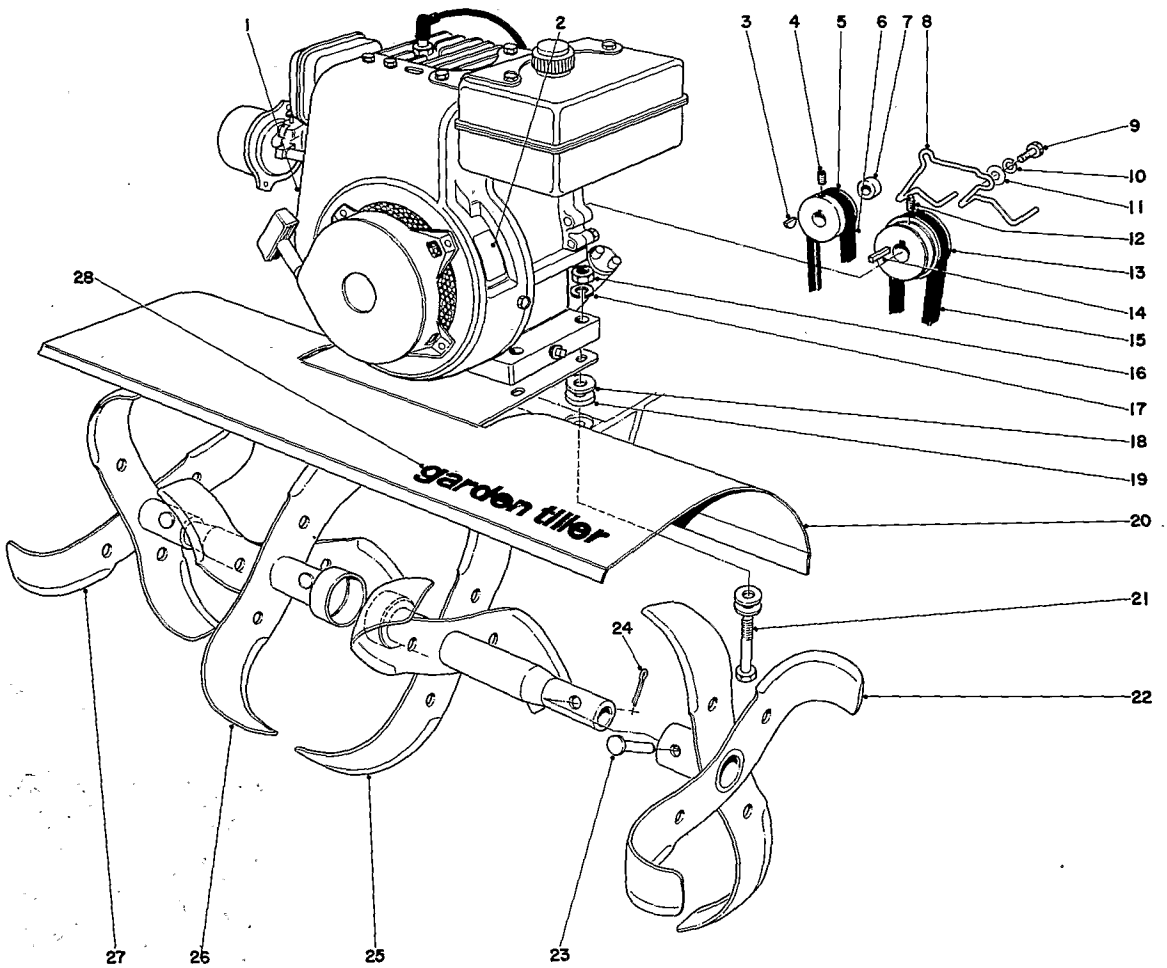

Tine and Engine Assembly

Ref. No.	Part No.	Description	No. Used
1	221-489	Engine	1
2	25-4060	Toro Lubrication Decal	1
3	3257-37	Hi Pro Key	1
4	3245-21	Set Screw	1
5	25-2170	Reverse Pulley	1
6	24-8940	Reverse Belt	1
7	24-8990	Spacer	2
8	24-8960	Belt Guide Upper	1
9	321-10	Capscrew	2
10	3253-3	Lockwasher	2
11	3256-2	Washer	2
12	3246-2	Set Screw	1
13	7-0070	Engine Pulley	1
14	7-0036	Key	1

Ref. No.	Part No.	Description	No. Used
15	7-0073	Belt – Forward	1
16	3217-6	Nut	4
17	3253-4	Lockwasher	4
18	3256-3	Washer	12
19	7-0081	Washer	2
20	7-0072	Plant Shield	1
21	322-11	Capscrew	4
22	20-8840	Slasher Tine L.H. Outer	1
23	7-2116	Clevis Pin	4
24	3272-7	Cotter Pin	4
25	20-8830	Slasher Tine L.H. Inner	1
26	20-8810	Slasher Tine R.H. Inner	1
27	20-8820	Slasher Tine R.H. Outer	1
28	17-8340	Decal – Tiller	1

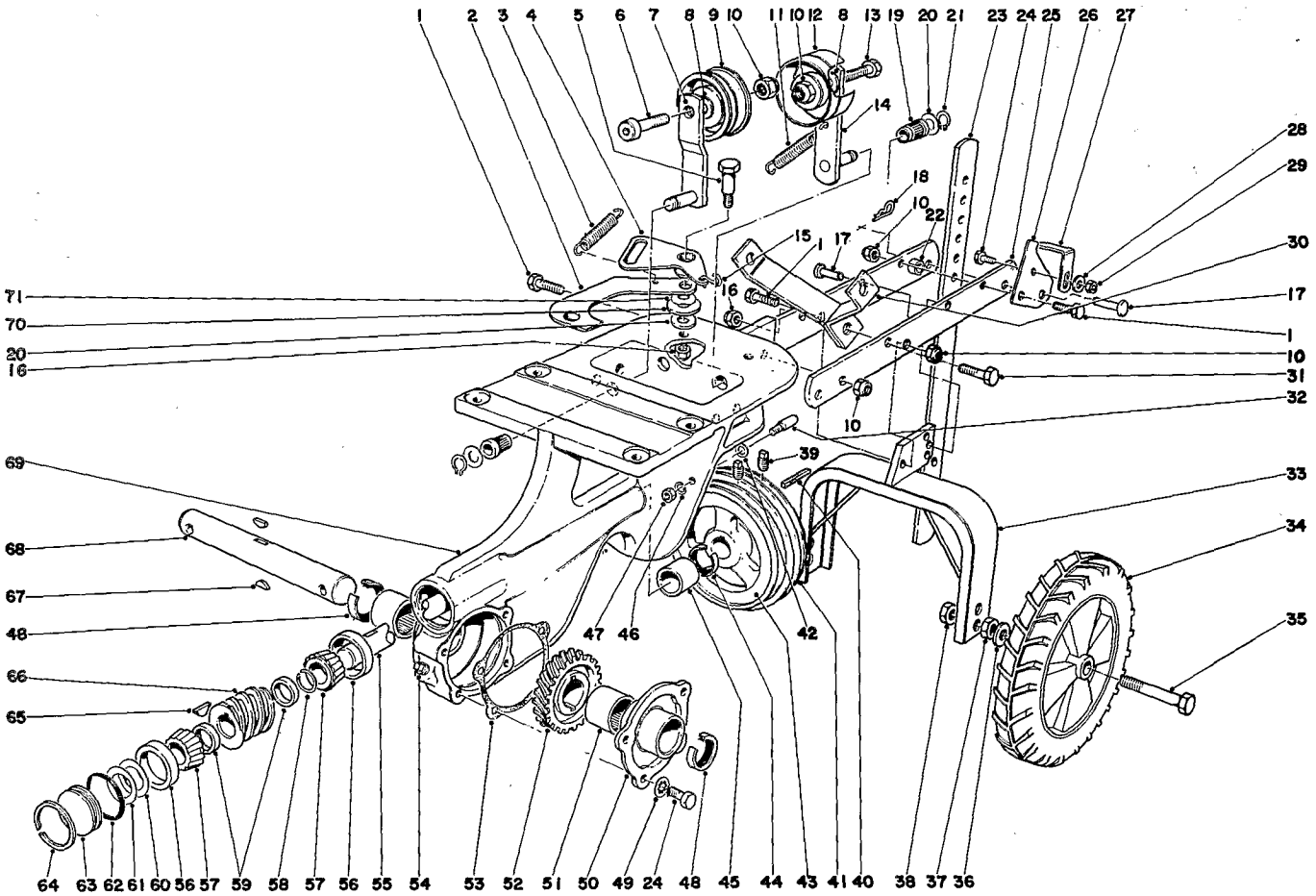

Chassis Assembly

Ref. No.	Part No.	Description	No. Used
1	323-8	Capscrew	4
2	7-0028	Reverse Link	1
3	7-1322	Spring – Reverse Return	1
4	7-0027	Bell Crank	1
5	7-0030	Shoulder Bolt	1
6	3274-45	Low Hd. Socket Capscrew	1
7	7-0055	Idler Arm	1
8	3256-24	Washer	1
9	7-0056	Idler Pulley	1
10	32152-2	Nut	6
11	7-0025	Spring	1
12	7-0051	Idler Pulley	1
13	323-9	Capscrew	1
14	7-0050	Idler Arm	1
15	7-3618	"S" Hook	1
16	32152-1	Locknut	2
17	7-2116	Clevis Pin	2
18	3290-255	Hair Pin	2

Ref. No.	Part No.	Description	No. Used
19	7-0023	Bearing Idler	2
20	3256-23	Washer	4
21	32120-35	Snap Ring	2
22	17-6530	Spacer	1
23	7-0076	Depth Gauge	1
24	321-3	Capscrew	5
25	17-8510	Draw Bar	2
26	17-8480	Hinge Latch	1
27	17-8490	Latch Drag Bar	1
28	3256-2	Flat Washer	1
29	32152-4	Nut	1
30	7-9340	Support Handle	1
31	322-7	Capscrew	1
32	7-0031	Belt Guide	2
33	17-8360	Wheel Bracket	1
34	24-8930	Wheel Assembly	2
35	325-13	Capscrew	2
36	3256-6	Washer	2

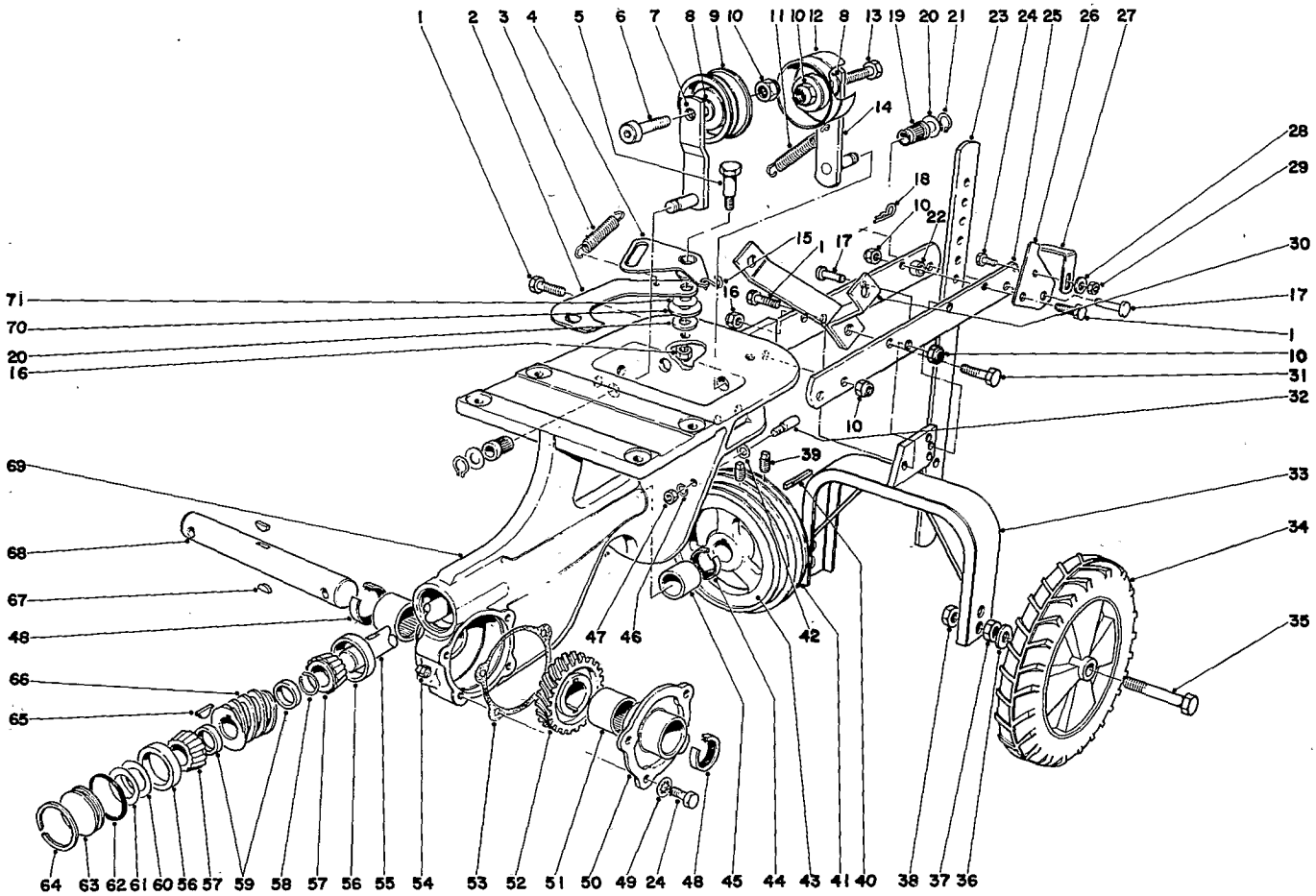

Chassis Assembly (continued)

Ref. No.	Part No.	Description	No. Used
37	3218-5	Jam Nut	2
38	32152-3	Locknut	2
39	3246-2	Set Screw	2
40	7-0036	Key	1
41	7-0035	Pulley	1
42	3256-16	Washer	2
43	7-0034	Pulley — Reverse	1
44	253-84	Oil Seal	1
45	256-167	Bushing	1
46	3255-7	Lockwasher	2
47	3218-1	Nut	2
48	7-0045	Oil Seal	2
49	3254-8	Lockwasher	4
50	7-0048	Cover	1
51	252-88	Needle Bearing	2
52	7-0047	Worm Wheel	1
53	7-0020	Gasket	1
54	281-1	Pipe Plug	1

Ref. No.	Part No.	Description	No. Used
55	7-0012	Worm Shaft	1
56	254-79	Bearing Cup	2
57	254-78	Bearing Cone	2
58	7-0013	Snap Ring	1
59	7-0015	Spacer	2
60	23-7690	Shim (.010)	1
61	23-7700	Shim (.020)	1
62	237-71	"O" Ring	1
63	23-7710	Plug Tiller	1
64	7-0018	Snap Ring	1
65	3257-23	Woodruff Key	1
66	7-0016	Worm Gear	1
67	3257-33	Woodruff Key	2
68	7-0046	Worm Shaft	1
69	23-7720	Chassis	1
70	3256-25	Washer	2
71	3290-213	Spring Washer	1
*	25-3900	Loose Parts Bag	1

*Not illustrated

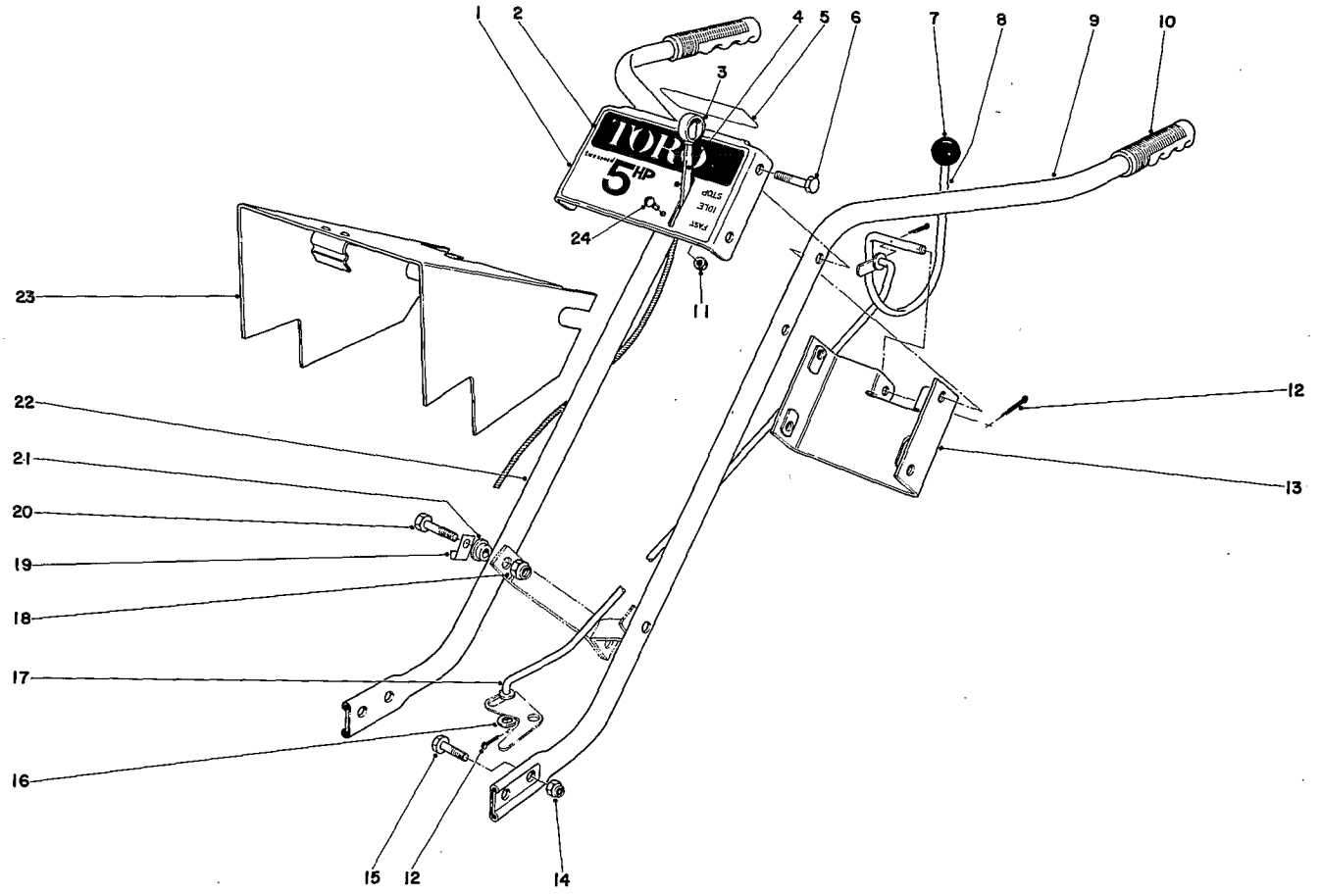

Handle Assembly

Ref. No.	Part No.	Description	No. Used
1	17-8580	Control Plate	1
2	25-3860	Decal	1
3	233-35	Knob	1
4	24-8900	Throttle Control	1
5	7-9450	Decal Clutch	1
6	322-9	Capscrew	4
7	233-22	Knob	1
8	7-9320	Clutch Control	1
9	7-9270	Handle L.H.	1
10	235-19	Handle Grip	2
11	32149-7	Locknut	2
12	3272-7	Cotter Pin	3

Ref. No.	Part No.	Description	No. Used
13	17-8460	Handle Brace	1
14	32152-2	Locknut	4
15	323-6	Capscrew	4
16	3256-24	Washer	1
17	7-0078	Clutch Rod	1
18	32152-1	Locknut	2
19	7-0077	Clip	1
20	322-11	Capscrew	2
21	7-2041	Bushing	2
22	7-9280	Handle R.H.	1
23	7-9190	Pulley Cover	1
24	3251-2	Round Head Machine Screw	2

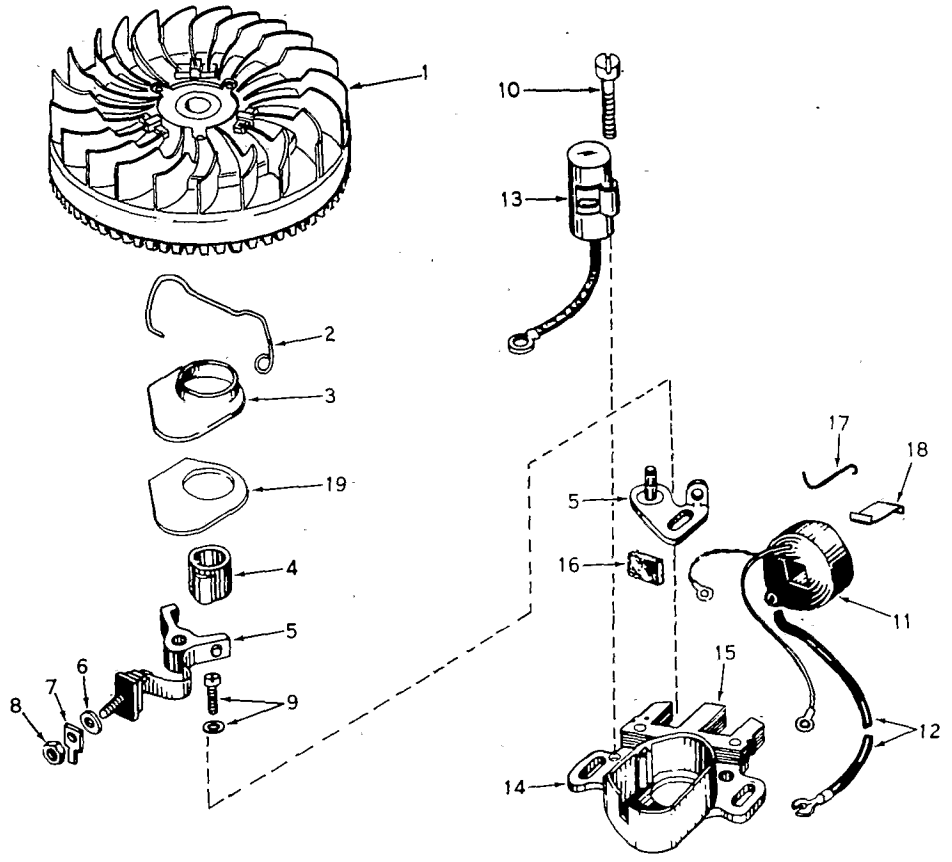

Magneto No. 610862

Ref. No.	Part No.	Description	No. Used
1	33659	Flywheel	1
2	30551	Spring, Breaker box dust cover	1
3	30550	Cover, Breaker box dust	1
4	30992	Cam, Breaker	1
5	30547A	Contact Assembly, Breaker	1
6	610385	Washer, Terminal	1
7	33356	Tab, Ground terminal	1
8	610408	Nut, Terminal	1
9	29181	Screw & Washer, Breaker	1
10	610593	Screw, Condenser	1

Ref. No.	Part No.	Description	No. Used
11	30560A	Coil Assy. (Incl. No. 12)	1
12	30554	Wire, Lead	1
13	30548A	Condenser	1
14	30545	Core & Plate	1
15	30561A	Stator Assy. (Incl. Nos. 5 thru 14, 16, 17 & 18)	1
16	30549	Felt, Cam wiper	1
17	31311	Clip, Coil locking	1
18	29629	Spring, Coil wedge	1
19	32052	Gasket, Breaker box	1

* The complete magneto is not available as an assembly. The magneto number is shown for reference purposes only. Order component parts individually, as shown in parts list.

Engine Tecumseh – Model HS50-67089A

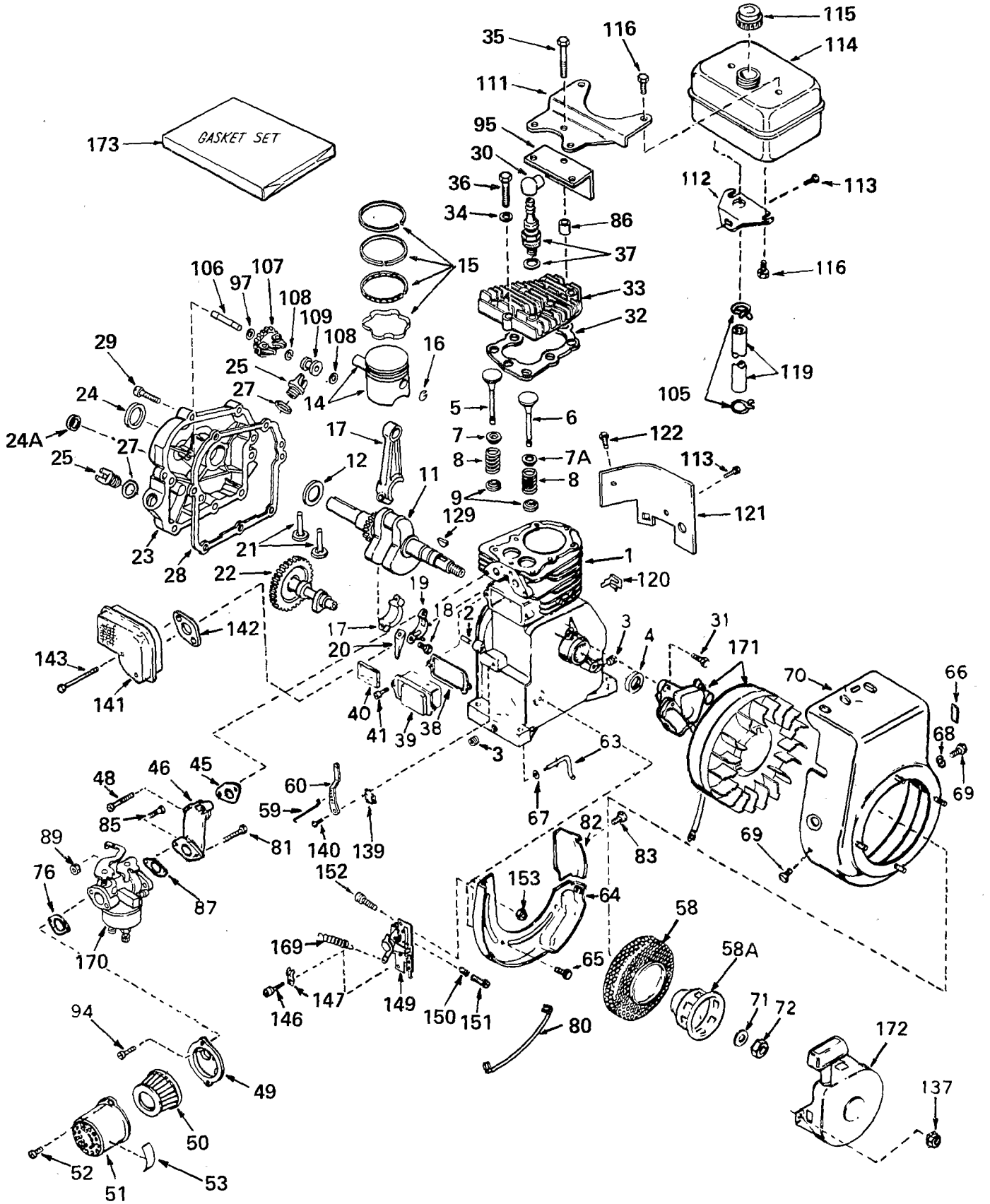

Engine Tecumseh – Model HS50-67089A

Ref. No.	Part No.	Description	No. Used
1	33674	Cylinder Assy. (Incl. Nos. 2, 3 & 4)	1
2	26727	Pin, Dowel	2
3	27642	Plug, Sq. hd. pipe (Oil drain)	2
4	32600	Seal, Oil	1
5	32644	Valve, Intake (Std.) (Incl. Nos. 7, 8 & 9)	1
5	32645	Valve, Intake (1/32" oversize) (Incl. Nos. 7, 8 & 9)	1
6	29313B	Valve, Exhaust (Std.) (Incl. Nos. 7A, 8 & 9)	1
6	29315B	Valve, Exhaust (1/32" oversize) (Incl. Nos. 7A, 8 & 9)	1
7	31671	Cap, Upper valve spring (Intake)	1
7A	33678	Cap, Upper valve spring (Exhaust)	1
8	31672	Spring, Valve	2
9	31673	Cap, Lower valve spring	2
11	33677	Crankshaft	1
12	32323	Washer, Thrust	1
14	33562	Piston & Pin Assy. (Std.) (Incl. 2 of No. 16)	1
14	33563	Piston & Pin Assy. (.010 oversize) (Incl. 2 of No. 16)	1
14	33564	Piston & Pin Assy. (.020 oversize) (Incl. 2 of No. 16)	1
15	33567	Ring Set, Piston (Std.)	1
15	33568	Ring Set, Piston (.010 oversize)	1
15	33569	Ring Set, Piston (.020 oversize)	1
16	20381	Ring, Piston pin retaining	2
17	33661	Rod Assy., Connecting (Incl. Nos. 18, 19 & 20)	1
18	32610	Screw, Connecting rod	2
19	32609	Plate, Lock	1
20	32654	Dipper, Oil	1
21	27241	Lifter, Valve	2
22	33696	Camshaft (Compression Release) (Extended)	1
23	32766A	Cover, Cylinder (Incl. Nos. 24, 24A, 25, 27 & 106)	1
24	27897	Seal, Oil	1
24A	30318	Seal, Oil (Camshaft)	1
25	27625	Plug, Oil filler (Incl. No. 27)	2
27	*29673	Gasket, Oil filler	2
28	*27677	Gasket, Cylinder cover	1
29	30564	Screw & Lockwasher, Hex hd. cap	7

Ref. No.	Part No.	Description	No. Used
30	610118	Cover, Spark plug	1
31	650489	Screw, Hex hd. Sems w/flat-washer	2
32	*33554	Gasket, Cylinder head	1
33	33016	Head, Cylinder	1
34	26073	Washer	8
35	650694	Screw, Hex hd. cap	5
36	6021	Screw, Hex hd. cap	3
37	33636	Plug, Spark (Champion J-8 or equivalent)	1
38	*31619	Gasket, Breather cover	1
39	31337	Breather Assy. (Incl. Nos. 38 & 40)	1
40	31410	Element, Breather	1
41	650128	Screw, Fil. slotted hd. Sems	2
45	*33673	Gasket, Intake	1
46	33666	Pipe, Intake	1
48	30646	Screw, Phil. fil. hd. Sems	2
49	31914	Bracket, Air cleaner	1
50	30727	Element, Air cleaner	1
51	31692	Body, Air cleaner	1
52	650152	Screw, Fil. slotted hd. Sems	2
53	31752	Decal, Air cleaner	1
58	33668	Screen, Starter cup	1
58A	33667	Cup, Starter	1
59	32698	Link, Governor-to-throttle	1
60	31510	Lever, Governor	1
63	31334	Rod, Governor	1
64	+33342	Baffle, Blower housing	1
65	650561	Screw, Phil. hex hd. Sems	2
66	31906	Decal, Name & Instruction	1
67	28277	Washer, Flat	1
68	650168	Washer, Flat	1
69	29212	Screw, Hex hd. Sems	2
70	**33663	Housing, Blower	1
71	650763	Washer, Belleville	1
72	650607	Nut, Flywheel	1
76	*27272	Gasket, Air cleaner	1
80	31388	Wire, Ground	1
81	6202	Screw, Hex hd. cap	1
82	33341	Extension, Baffle	1
83	650701	Screw, Phil. hex washer hd. self-drilling	1
85	650601	Screw, Phil. fil. hd.,	1
86	28212	Spacer	2
87	*26756	Gasket, Carburetor	1
89	29752	Nut & Lockwasher Assy.,	2
94	28820	Screw, Phil. fil. hd. mach. Sems	2
95	33344	Baffle, Heat	1
97	30590A	Washer, Flat	1
105	26460	Clamp, Fuel line	2
106	30574	Shaft, Mechanical governor	1

Engine Tecumseh – Model HS50-67089A

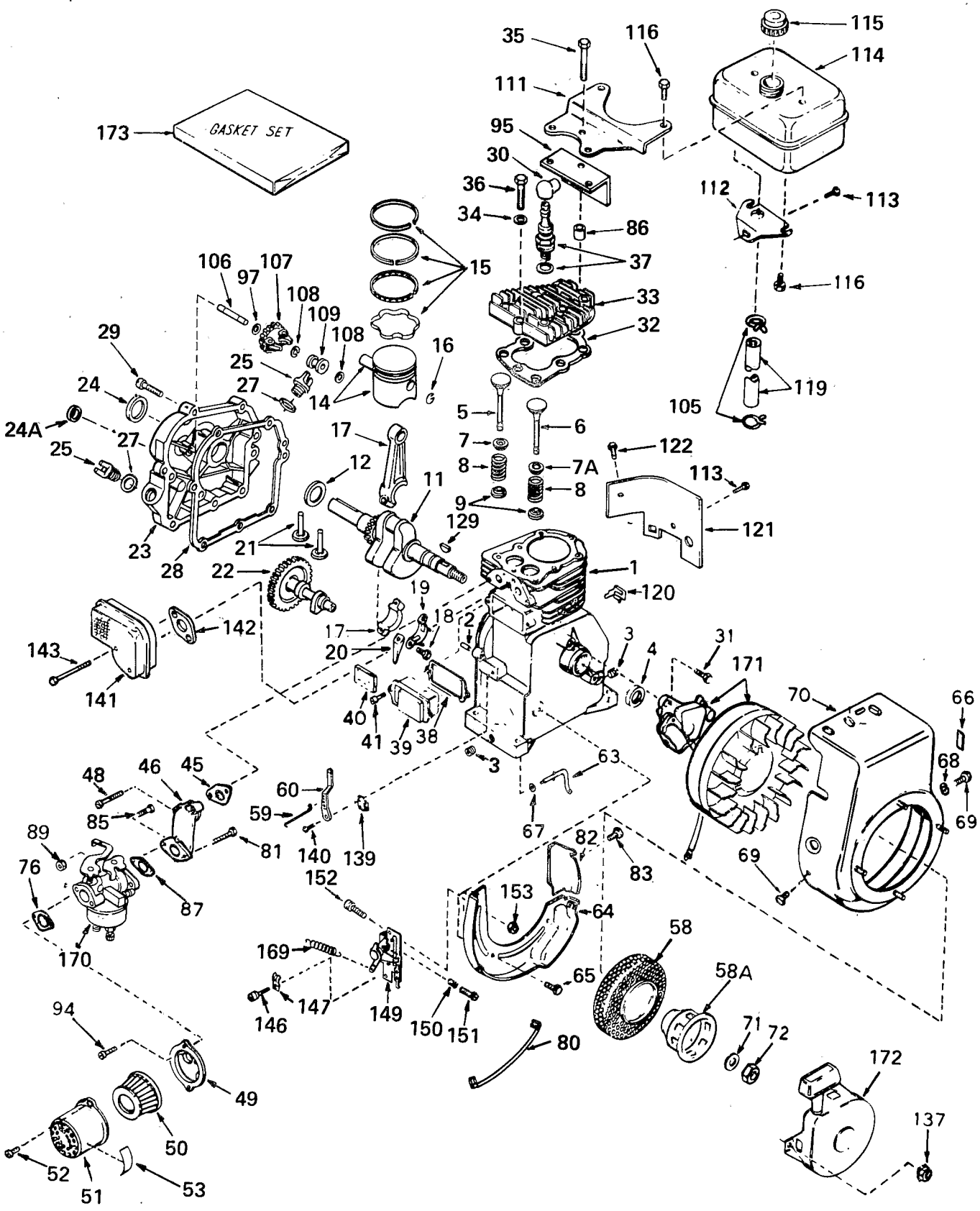

Engine Tecumseh – Model HS50-67089A

Ref. No.	Part No.	Description	No. Used
107	30591	Gear Assy., Governor (Incl. No. 97)	1
108	29193	Ring, Retaining	2
109	30588A	Spool, Governor	1
111	28371A	Bracket, Fuel tank - upper	1
112	32762	Bracket, Fuel tank - lower	1
113	650561	Screw, Phil. hex hd. Sems	1
114	33120	Tank Assy., Fuel (Incl. No. 116)	1
115	410144B	Cap, Fuel	1
116	650665	Screw, Hex hd. Sems	4
119	30705	Line, Fuel	1
120	29443	Clip, Fuel line	1
121	29745	Extension, Blower housing	1
122	650128	Screw, Fil. slotted hd. Sems	1
129	27247	Key, Flywheel	1
137	**29752	Nut / Lockwasher Assy.	4
139	31335	Clamp, Governor lever	1
140	650548	Screw, Hex slotted washer hd.	1
141	33697	Muffler	1
142	*33670	Gasket, Muffler	1

Ref. No.	Part No.	Description	No. Used
143	650253	Screw, Hex hd. cap	2
146	28942	Screw, Hex slotted hd. Sems	1
147	27793	Clip, Conduit	1
149	33879	Control Assy., Speed (Incl. Nos. 150 thru 153)	1
150	31342	Spring, Compression	1
151	650549	Screw, Fil. slotted hd. mach.	1
152	+30091	Screw, Hex slotted washer hd. Sems	2
153	+30322	Nut, Lock	2
169	31426	Spring, Extension	1
170	631701	Carburetor (Incl. No. 87)	1
171	610862	Magneto (The complete magneto is not available as an assembly. The magneto number is shown for reference purposes only. Order component parts individually, as shown in parts list.)	1
172	**590420	Starter, Rewind	1
173	33683	Gasket Set (Incl. items marked *)	1

+ In original production the speed control assembly is riveted to the blower housing baffle. Replacement speed control assembly includes screws and nuts for mounting.

** In original production the starter is riveted to the blower housing. If either the starter or blower housing requires replacement, both will have to be ordered. Also order 4 nuts illustrated to attach replacement starter to replacement blower housing.

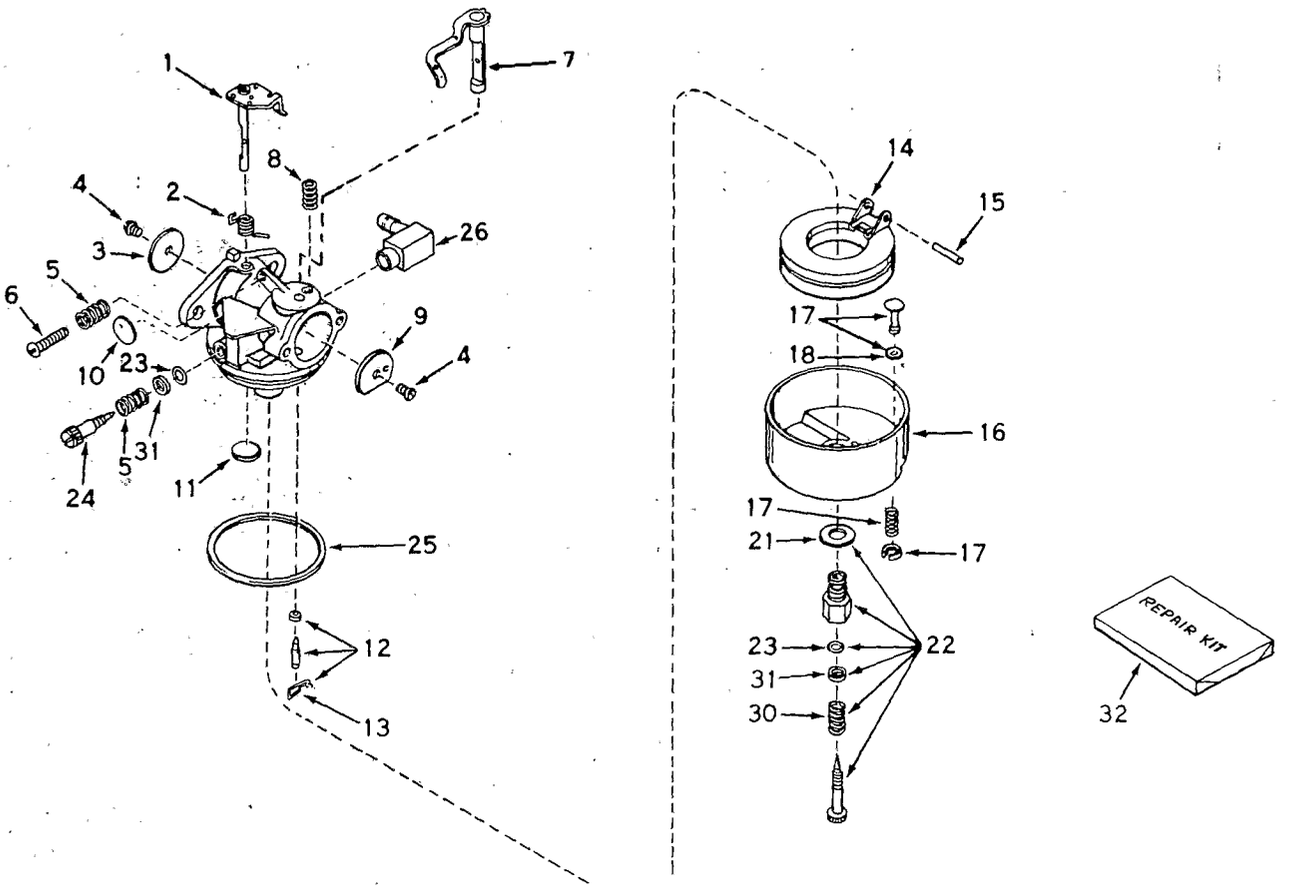

Carburetor No. 631701

Ref. No.	Part No.	Description	No. Used
1	631615	Shaft & Lever Assy., Throttle	1
2	631279	Spring, Throttle return	1
3	631036	Shutter, Throttle	1
4	650506	Screw	2
5	630766	Spring, Idle regulating screw	2
6	650417	Screw, Idle regulating	1
7	630904	Shaft / Lever Assy., Choke	1
8	630735	Spring, Choke stop	1
9	31837	Shutter, Choke	1
10	*630748	Plug, Welch	1
11	*631027	Plug, Welch	1
12	*631021	Inlet Needle, Seat & Clip Assy. (Incl. No. 13)	1
13	631022	Clip, Inlet needle	1
14	631023	Float, Carburetor	1

Ref. No.	Part No.	Description	No. Used
15	*631024	Shaft, Float	1
16	631867	Bowl, Float	1
17	27136A	Plunger Assy., Drain (Incl. No. 18)	1
18	*27554	Gasket, Drain plunger	1
21	27110	Gasket, Bowl-to-body	1
22	*31839	Adjustment Screw Assy., Main (Incl. Nos. 21, 23, 30 & 31)	1
23	*630740	"O" Ring, Adjustment screw	2
24	*631078	Screw, Idle adjustment	1
25	*631028	Gasket, Bowl-to-body	1
26	631807	Fitting, Fuel inlet	1
30	630738	Spring, Main adjustment screw	1
31	630739	Washer, Flat	1
32	31840	Repair Kit (Incl. items marked *)	1

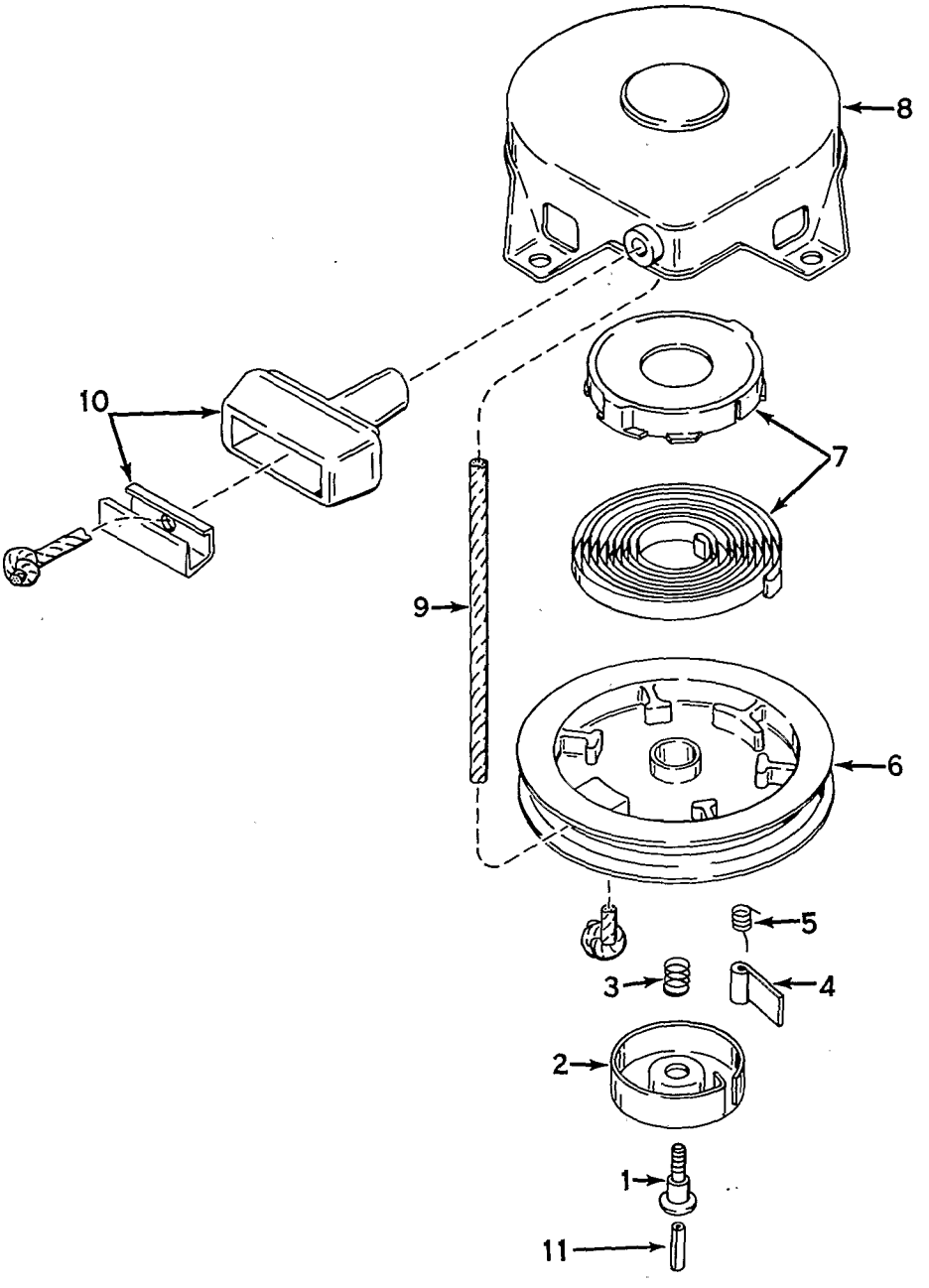

Rewind Starter No. 590420

Ref. No.	Part No.	Description	No. Used
1	590409	Screw, Retainer	1
2	590410	Retainer, R.H.	1
3	590411	Spring, Brake	1
4	590148	Dog, Starter	1
5	590412	Spring, R.H. Dog	1
6	590413A	Pulley	1

Ref. No.	Part No.	Description	No. Used
7	590414	Spring & Keeper Assy.	1
8	590415	Housing Assy., Starter	1
9	590386	Rope, Starter	1
10	590387	Handle Assy., Starter	1
11	590459	Pin, Centering	1

Product Changes

In an effort to make improvements available to TORO owners as quickly as possible, minor changes are incorporated into Toro's products from time to time that do not become immediately shown in the Parts Catalog. If such a change apparently has been made in your unit, which is not reflected in your manual, see your TORO distributor or his Authorized TORO Service Dealer for information and part numbers.

Important Ordering Instructions

Repair parts are available from your Authorized TORO Service Dealer. To insure getting correct parts without delay, furnish the following information:

1. Serial number of your unit as shown on the name plate.
2. Part number, description, and quantity of each part required.
3. State whether parts should be shipped by mail or express. All repair parts are shipped F.O.B. Factory.
4. Name and address where parts are to be shipped.
5. Do not order by reference number; use part number only.

The Toro Promise

It is Toro's policy to design and produce TORO products to provide our customers with a high level of performance and durability in normal operation. Our products, however, are produced in high volume, and it is inevitable that occasionally a unit will reach a customer with a defect in materials or workmanship which causes the unit to fall below the normal high level of TORO performance. Invariably, such a defect will be noticed in a residential product and in an institutional product within one year after purchase. Recognizing this possibility, Toro has established a simple guarantee policy and procedure that is intended to assure customer satisfaction. This guarantee statement is as follows:

The Toro Promise

The Toro Company promises to repair any TORO product for the original purchaser if defective in materials or workmanship. The following time periods from the date of purchase apply:

Residential and Institutional Products . . . . . 1 year
Residential Products Used Commercially . . 45 days

The costs of parts and labor are included, but the customer pays the transportation costs. Just return any residential product to an Authorized TORO Service Dealer, or any institutional product to a TORO distributor.

Should the customer feel that a product is defective and wish to rely on The Toro Promise, the following procedure is recommended:

1. Contact any Authorized TORO Service Dealer or Distributor, but preferably the dealer or distributor from whom you purchased the product.
2. He will instruct you to either return the product to him, or tell you the name and address of your nearest Authorized TORO Service Dealer or Distributor if the product is to be returned to such a dealer or distributor.
3. Bring the product and your original sales slip, or other evidence of purchase date, to the service dealer or distributor.
4. The servicing dealer or distributor will inspect the unit, advise you whether the product is defective and, if so, make all repairs necessary to correct the defect without extra charge to the customer.

If for any reason the customer is dissatisfied with the dealer's or distributor's analysis of the defect or the service he performs, he can contact us. Write:

TORO "Customer Care" Department
8111 Lyndale Avenue South
Bloomington, Minnesota 55420

Litho in U.S.A.