Form No. 3326-240

Speedometer Kit

Reelmaster® 5000 and 6000 Series

Part No. 104-9325
Part No. 105-3306

Installation Instructions

1. Make sure the lights are off and the key is removed from the ignition switch.
2. Disconnect the battery; refer to the traction unit Operator's Manual for further instructions.
3. Disconnect the existing speedometer and remove it from the instrument panel.
4. Cut the three wires (orange, gray, and black) 1/2 in. from the fork terminals. Remove about 3/8 in. of insulation from the ends of the wires.
5. Insert the replacement speedometer into the hole in the instrument panel. Secure the speedometer clamp to the speedometer with the nuts (Fig. 1).
6. Match the wire colors (orange, gray, and black) with the wires on the speedometer. Splice the wires together and crimp them. Heat-shrink the splices with a heat gun.
7. Plug the 6-way sealed connector from the wire harness into the connector on the speedometer.
8. Secure the harness to the steering column with a wire tie.
9. Connect the battery and start the traction unit. Test the speedometer to ensure that it is installed correctly.

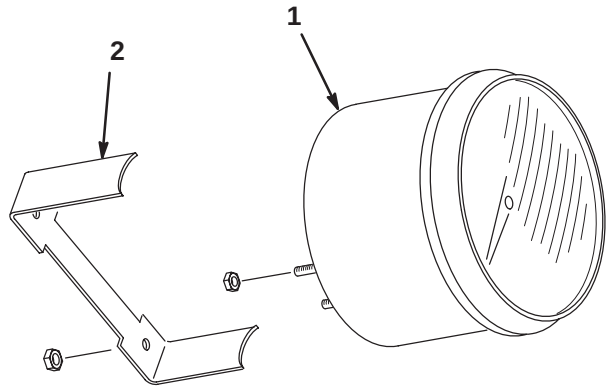

Figure 1

1. Speedometer
2. Speedometer clamp

PROTOTYPE

© 2001 by The Toro Company
8111 Lyndale Avenue South
Bloomington, MN 55420-1196

All Rights Reserved
Printed in the USA