FORM NO. 01-502-0100

TORO®

MODEL NO. 44550 - 20101 & UP
MODEL NO. 44555 - 20101 & UP

OPERATOR'S MANUAL

YARD CHIPPER 1325

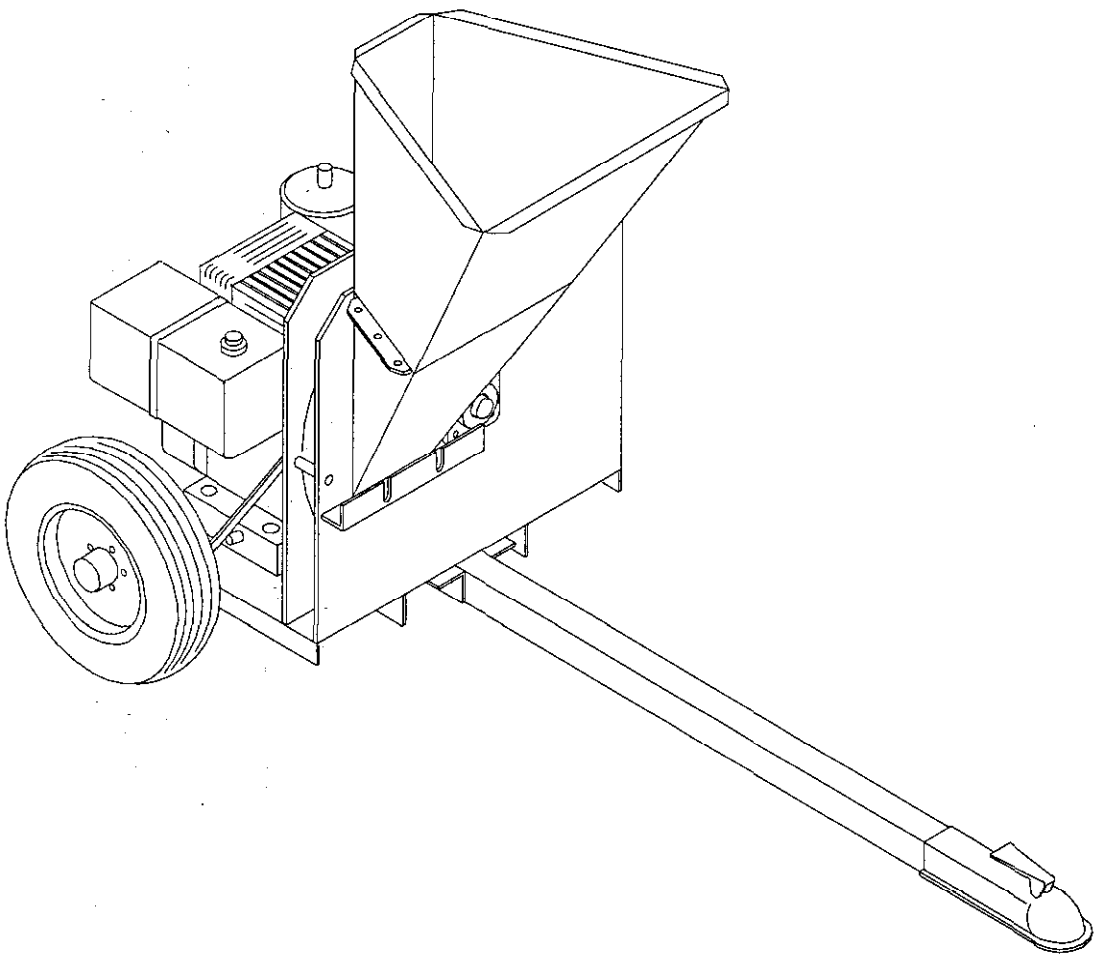

©The TORO Company - 1992
All Rights Reserved

FOREWORD

Thank you for buying a high quality Toro turf care product. To get the best performance from this machine, operate and maintain it according to the instructions in this manual.

Toro also wants to stress the importance of safety. You and anyone else using or maintaining this machine are strongly urged to read this manual, especially all the safety instructions.

DANGER, WARNING and CAUTION, used with the triangular safety alert symbol, highlight safety messages. Always read and understand these messages because they relate to personal injury and your safety.

If you ever need help or have questions about your new Toro turf care product, contact your local Authorized Toro Distributor. The Toro Distributor has a complete supply of replacement parts, a full line of accessories and a professional service staff to support you. Keep your Toro all Toro. Buy genuine Toro parts and accessories.

TABLE OF CONTENTS

	Page
SAFETY INSTRUCTIONS	3 - 4
SAFETY AND INSTRUCTION DECALS	5 - 6
SPECIFICATIONS	7
SET UP INSTRUCTIONS	8
BEFORE OPERATING	
Check Tire Pressure	9
Check Crankcase Oil	9
Fill Fuel Tank	9
CONTROLS	10
OPERATING INSTRUCTIONS	11 - 12
LUBRICATION	12
MAINTENANCE	13 - 15
TROUBLESHOOTING	16
STORAGE	17
IDENTIFICATION AND ORDERING	17
MAINTENANCE CHART	18 - 19
THE TORO PROMISE	Back Cover

SAFETY INSTRUCTIONS

The safety alert symbol means CAUTION, WARNING or DANGER - "personal safety instruction". Read and understand the instruction because it has to do with safety. Failure to comply with the instruction may result in personal injury.

BEFORE OPERATING

1. Read and understand the contents of this manual before starting and operating the machine. Become familiar with all controls and know how to stop quickly. A free replacement manual is available by sending complete Model and Serial Number to:

The Toro Company
100 Industrial Parkway
Industrial Airport, Kansas 66031

2. Do not allow children to operate the machine. Do not allow adults to operate the machine without proper instruction.

3. **NEVER** operate the machine while under the influence of drugs or alcohol.

4. Keep all shields and safety devices in place. If a shield, safety device or decal becomes damaged, malfunctioning or illegible, repair or replace it before operation is commenced. Also tighten loose nuts, bolts to ensure machine is in safe operating condition.

5. Before each use, tighten all bolts and nuts.

6. Do not alter this equipment in any manner which may cause hazardous conditions.

7. Fill fuel tank with fuel before starting the engine. Avoid spilling any fuel. Since gas is flammable, handle it carefully.

A. Use a approved fuel container.

B. Do not fill tank when engine is hot or running.

C. Do not smoke while handling fuel.

D. Fill tank outdoors and up to about one inch (25 mm) from the top of the tank.

E. Wipe up any spilled fuel.

SAFETY INSTRUCTIONS (Continued)

WHILE OPERATING

⚠ DANGER

ROTATING CUTTING BLADES

- If unit becomes clogged, shut off engine and wait for all moving parts to stop.
- Drum may rotate for up to 5 minutes after engine is stopped.

1. Do not run the engine in a confined area without adequate ventilation. Exhaust fumes are hazardous and could possibly be deadly.

2. **NEVER** direct discharge chute at bystanders.

3. Always keep clear of discharge opening.

4. Do not touch engine, muffler or radiator while engine is running or soon after it is stopped. These areas could be hot enough to cause a burn.

5. **NEVER** leave operating machine unattended. Stop engine before leaving work area.

6. **NEVER** wear loose fitting clothing. Always wear safety glasses, gloves and ear protection.

MAINTENANCE

1. If major repairs are ever needed or assistance desired, contact an Authorized TORO Distributor.

2. Make sure machine is in safe operating condition by keeping nuts, bolts and screws tight.

3. To reduce potential fire hazard, keep the engine free of excessive grease, grass, leaves and accumulations of dirt.

4. Do not overspeed the engine by changing the governor settings. Maximum engine speed with no load is 3000 RPM. To ensure safety and accuracy, have an Authorized TORO Distributor check maximum engine speed with a tachometer.

5. Engine must be shut off before checking oil or adding oil to the crankcase.

SAFETY AND INSTRUCTION DECALS

The following safety and instruction decals are installed on the unit. Replace any decals that becomes damaged or illegible. Part numbers for decals are listed below and in your Parts Catalog. Order replacements from your Authorized Toro Distributor.

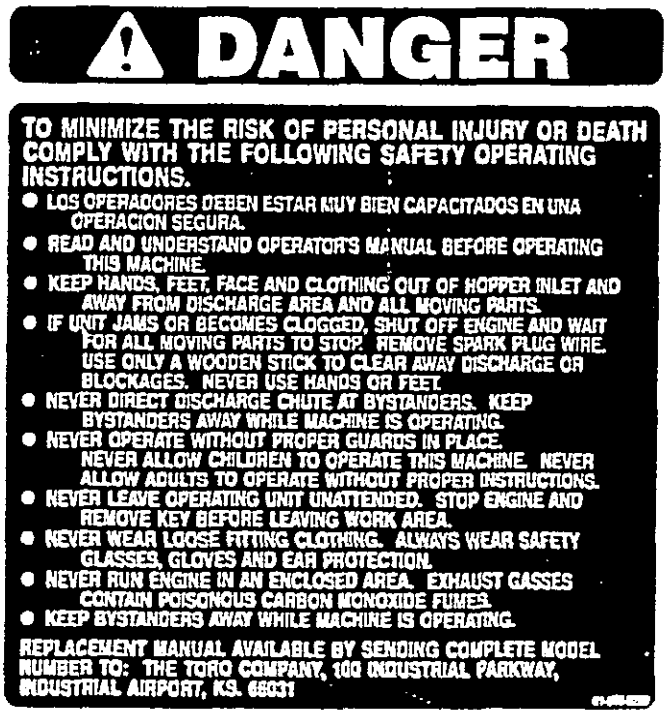

FRONT OF EXTENSION CHUTE
(Part No. 01-506-0280)



BY GAS CAP
(Part No. 01-506-0360)



TOP OF BELT GUARD
(Part No. 01-506-0040)



EACH SIDE OF EXTENSION CHUTE
(Part No. 01-506-0400)



NEAR BEARINGS & GREASE POINTS
(Part No. 01-506-0550)

SAFETY AND INSTRUCTION DECALS (Continued)

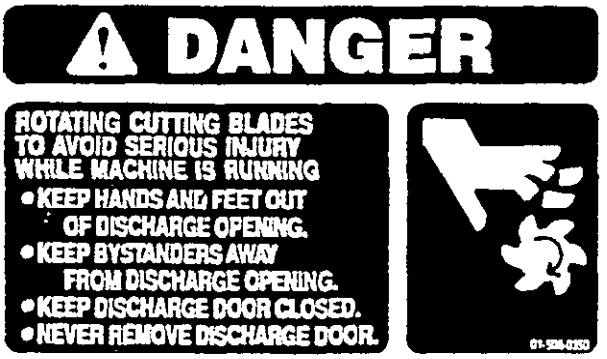

FRONT & BACK OF MAIN BODY
(Part No. 01-506-0350)

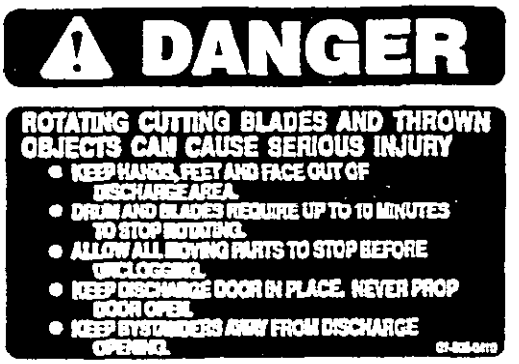

ABOVE BLADE ACCESS OPENING
(Part No. 01-506-0410)

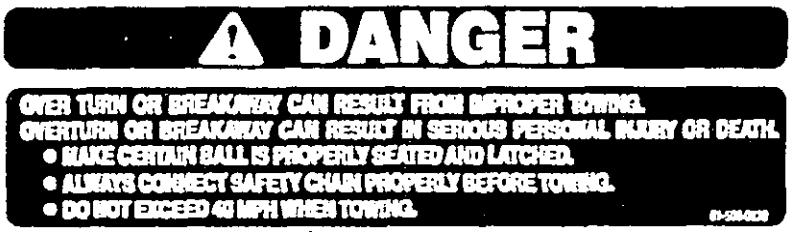

ON TONGUE
(Part No. 01-506-0630)

SPECIFICATIONS

ENGINE: 8 H.P. Briggs & Stratton (Optional - 8H.P. Honda)

DRUM: 25" dia. x 1" thick steel

BLADES: 2, tool steel

CUTTER BAR: Adjustable, tool steel

DRIVE: Belt, 3/3V-300 Power Band

TIRES & WHEELS: 2, 4.80 x 8 x 2 Ply

BEARINGS: Self sealed throughout

FRAME: All welded steel construction

DISCHARGE: At side

VOLUME: Approx. 500-1000 lbs. per hour (subject to operator skill - material being processed.)

HITCH: Class 1, 1-7/8" ball

TOWING SPEED: 40 MPH max. recommended

DIMENSIONS: Length - 60-1/2"
Width - 36-1/2"
Height - 32-1/2"

SHIPPING WEIGHT: 335 lbs.

SET UP INSTRUCTIONS

ATTACH EXTENSION CHUTE (Fig. 1)

1. Remove all banding from the Chipper 1325 and roll the unit off the skid.

2. Remove the extension chute from the skid.

3. Place the chute on the chipper and attach with 5/16" x 1" bolts as shown in Fig. 1.

NOTE: LIABILITY VOID IF NOT ATTACHED.

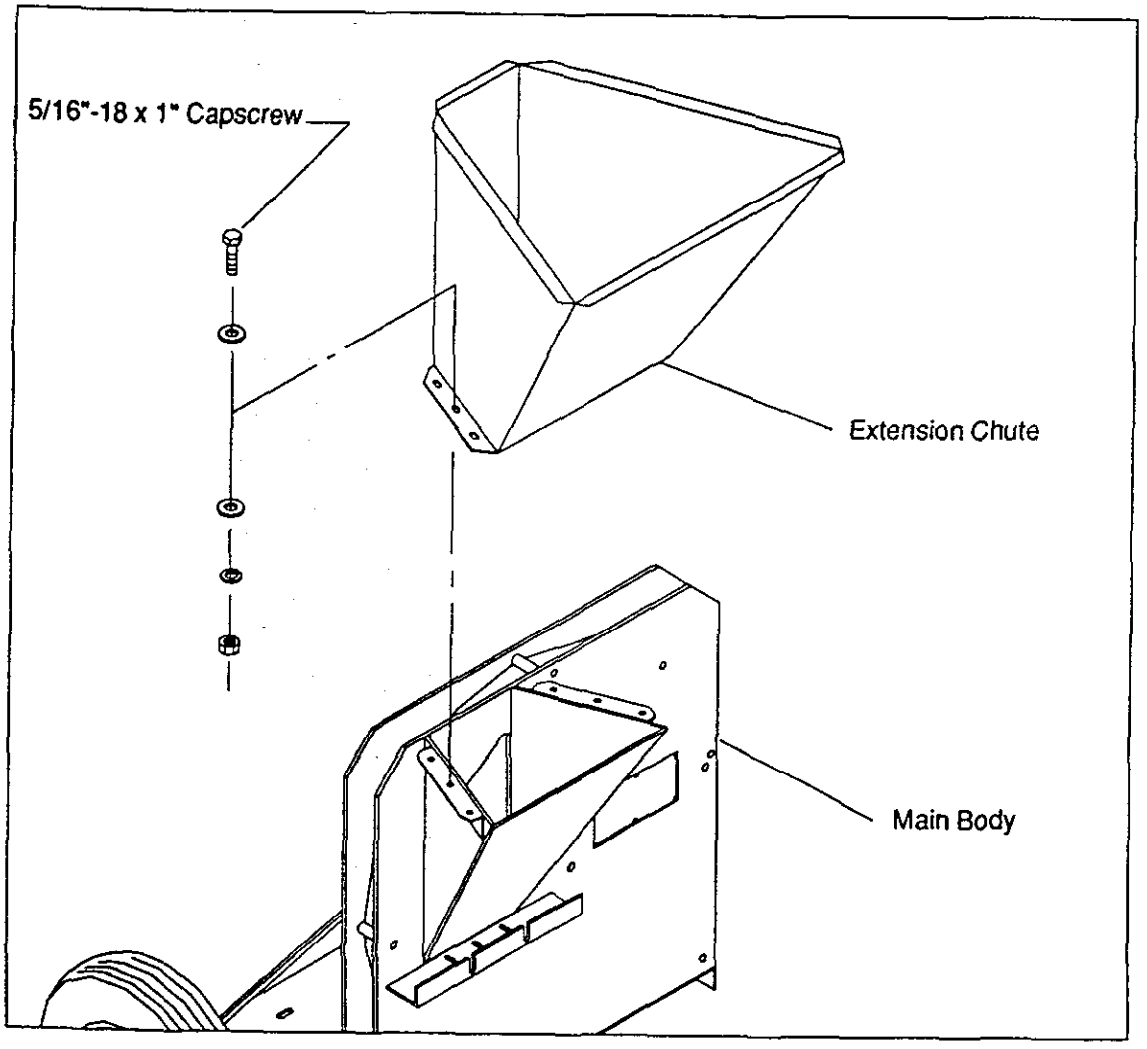

Figure 1

BEFORE OPERATING

CHECK TIRE PRESSURE

Check tire pressure before each use. Inflate to 50 PSI.

CHECK CRANKCASE OIL

Oil recommendations are: SAE 10W30 SF-CC

The engine is shipped with 1-1/2 pints of oil in the crankcase; however, level of oil must be checked before and after the engine is first started.

1. Position the chipper on a level surface and make sure engine is off.

2. Remove the dipstick and wipe it with a clean rag. Push dipstick down into the tube and ensure it is fully seated. Pull dipstick out of the tube and check level of oil. If oil level is low, add enough oil to raise level to top notch on dipstick.

IMPORTANT: Check level of oil after every 5 hours of operation or daily. Change oil after every 50 hours of operation and change the oil filter after the first 50 hours and every 100 hours thereafter. Change oil and filter more frequently when engine is operated in extremely dusty conditions.

FILL FUEL TANK WITH GASOLINE

THE TORO COMPANY STRONGLY RECOMMENDS THE USE OF FRESH CLEAN, UNLEADED REGULAR GRADE GASOLINE IN TORO GASOLINE POWERED PRODUCTS. UNLEADED GASOLINE BURNS CLEANER, EXTENDS LIFE, AND PROMOTES GOOD STARTING BY REDUCING THE BUILD-UP OF COMBUSTION CHAMBER DEPOSITS.

Note: Do not mix oil with gasoline. **NEVER** use methanol, gasoline containing methanol, gasohol, gasoline additives, premium gasoline, or white gas because engine/fuel system damage could result.

⚠ DANGER

Because gasoline is flammable, caution must be used when storing or handling it. Do not fill fuel tank while engine is running, hot or when machine is in an enclosed area. Vapors may build up and be ignited by a spark or flame source many feet away. **DO NOT SMOKE** while filling the fuel tank to prevent possibility of explosion. Always fill fuel tank outside and wipe up any spilled gasoline before starting engine. Use a funnel or spout to prevent spilling gasoline before starting engine and fill tank to about 1 inch (25 mm) below the filler neck. Store gasoline in a clean safety approved container and keep the cap in place on the container. Keep gasoline in a cool, well ventilated place; **NEVER** in an enclosed area such as a hot storage shed. To assure volatility, do not buy more than a 30 day supply of gasoline.

Gasoline is a fuel for internal combustion engines; therefore, do not use it for any other purpose. Since many children like the smell of gas, keep it out of their reach because the fumes are explosive and dangerous to inhale.

1. Remove the cap from the fuel tank and fill the tank to within 1 inch (25 mm) from the top with unleaded gasoline. Install fuel cap tightly.

2. Wipe up any gasoline that may have spilled to prevent a fire hazard.

CONTROLS

THROTTLE CONTROL

Throttle is used to operate engine at various speeds. Moving throttle forward increases engine speed; backwards decreases engine speed. The throttle regulates the speed of the chipper drum.

IDLER HANDLE (Fig. 2)

The idler handle is used to engage the idler pulley which engages the chipper drum. Always engage and disengage at a low engine RPM (750).

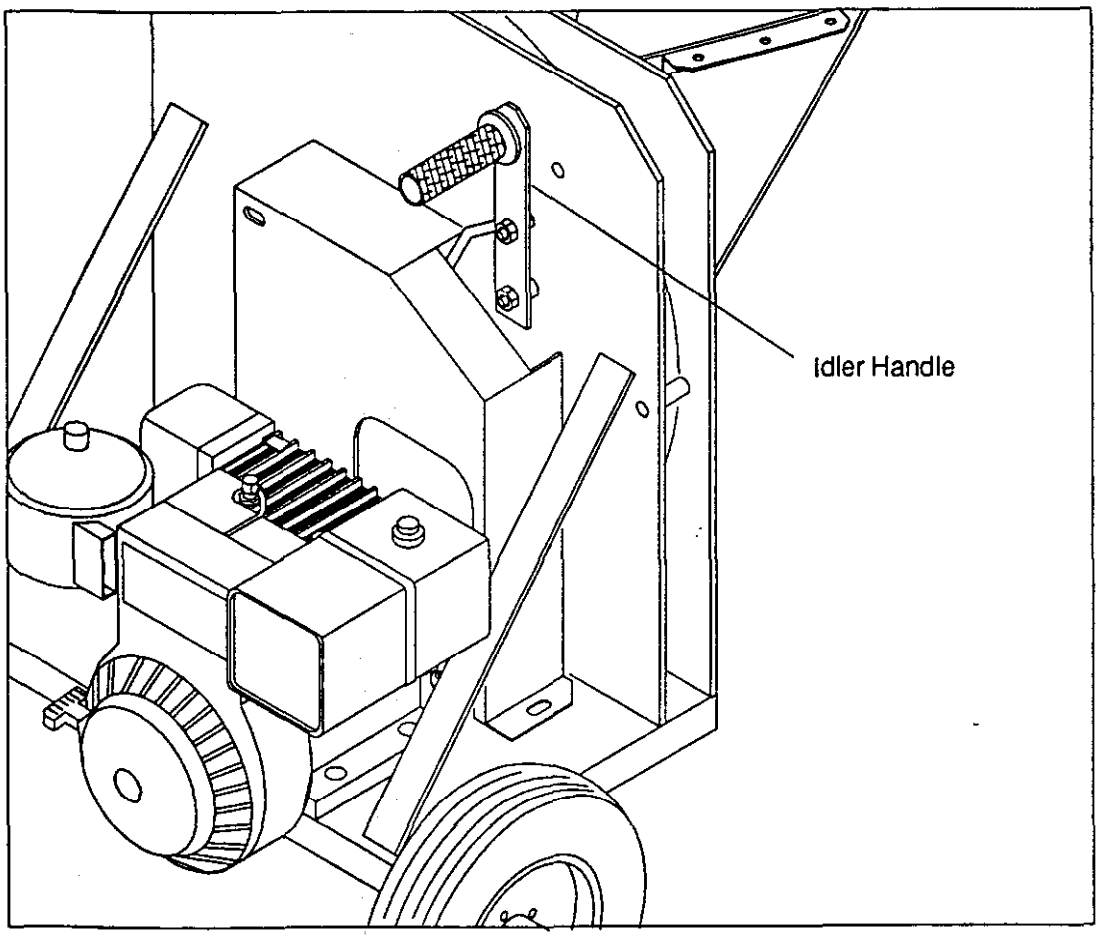

Figure 2

OPERATING INSTRUCTIONS

STARTING/STOPPING ENGINE

1. Park the unit on a level surface and block tires.

2. Set discharge chute in position away from bystanders.

3. Turn starter switch to the ON position. Start engine with the throttle at 1/2 open and choke activated. When engine starts, close the choke gradually.

IMPORTANT: NEVER turn the starter switch while the engine is running.

If the engine does not start after 10 seconds, wait for another 30 seconds and then start the engine starting sequence over again.

CHIPPING MATERIAL

⚠ DANGER

OBJECTS ARE DISCHARGED FROM CHUTE WITH CONSIDERABLE FORCE

- Contact with thrown objects can cause serious injury.
- **NEVER** direct discharge opening toward bystanders. keep bystanders away while machine is operating.
- Keep hands, feet, face and clothing out of hopper inlet and away from discharge area and all moving parts.

1. With engine running and throttle at slow position, slowly engage the idler lever.

2. After engagement of idler run engine for one minute and then turn throttle to full position.

IMPORTANT: Always wear safety glasses, gloves and ear protection.

DO NOT OVERLOAD! When feeding large branches (2-1/2" to 3") into the YARD CHIPPER 1325, allow enough time for the engine and the flywheel to come back up to full RPM before inserting another branch.

3. **ALWAYS** feed the butt end first to eliminate dragging down of the engine.

4. If the unit becomes clogged, shut off engine and wait for all moving parts to stop. Remove spark plug wire. Use only a wooden stick to clear away discharge or blockages. **NEVER USE HANDS OR FEET.**

5. **NEVER** hang onto the material while it is being fed into the infeed chute. Release the material as soon as the drum grabs it.

⚠ DANGER

TO AVOID SERIOUS INJURY FROM BLADE CONTACT AND THROWN OBJECTS:

- Keep hands, feet and face out of discharge area.
- **ALWAYS** wear eye protection while operating.
- Drum may rotate for up to 10 minutes after engine is stopped.
- **Keep** discharge door in place. **NEVER** prop door open.

SHUT DOWN

IMPORTANT: Always idle engine down to 750 RPM before disengaging

1. Idle engine to 750 RPM.

2. Disengage the idler and run for a few minutes until drum rotation is minimal.

3. Turn starter switch to OFF.

TOWING THE CHIPPER

1. Attach the trailer ball to the ball on the towing vehicle. The ball on the chipper trailer is 2" and the towing vehicle must have the same size.

2. Attach the safety chains to the towing vehicle. When attaching the chains **ALWAYS:**

A. Attach the chains in a "X" pattern to the towing vehicle.

B. Leave some slack in the chain but do not allow to drag on the ground.

C. The hook on the end of the chain must be hooked back into the chain link not to the chipper, towing vehicle or anywhere else.

3. Always use care when towing the chipper. Beware of the chipper at all times.

LUBRICATION

BEARINGS (Fig. 3)

The chipper has two self sealing bearings that must be lubricated with a No. 2 Lithium based grease.

IMPORTANT: Lubricate the bearings to maintain a slight leakage on the seals. Too much grease can cause overheating.

WHEELS AND WHEEL BEARINGS (Fig. 3)

The wheel bearings must be lubricated with a No. 2 Lithium based grease. Grease fittings every 50 hours of operation or as needed to maintain a slight leakage at the points.

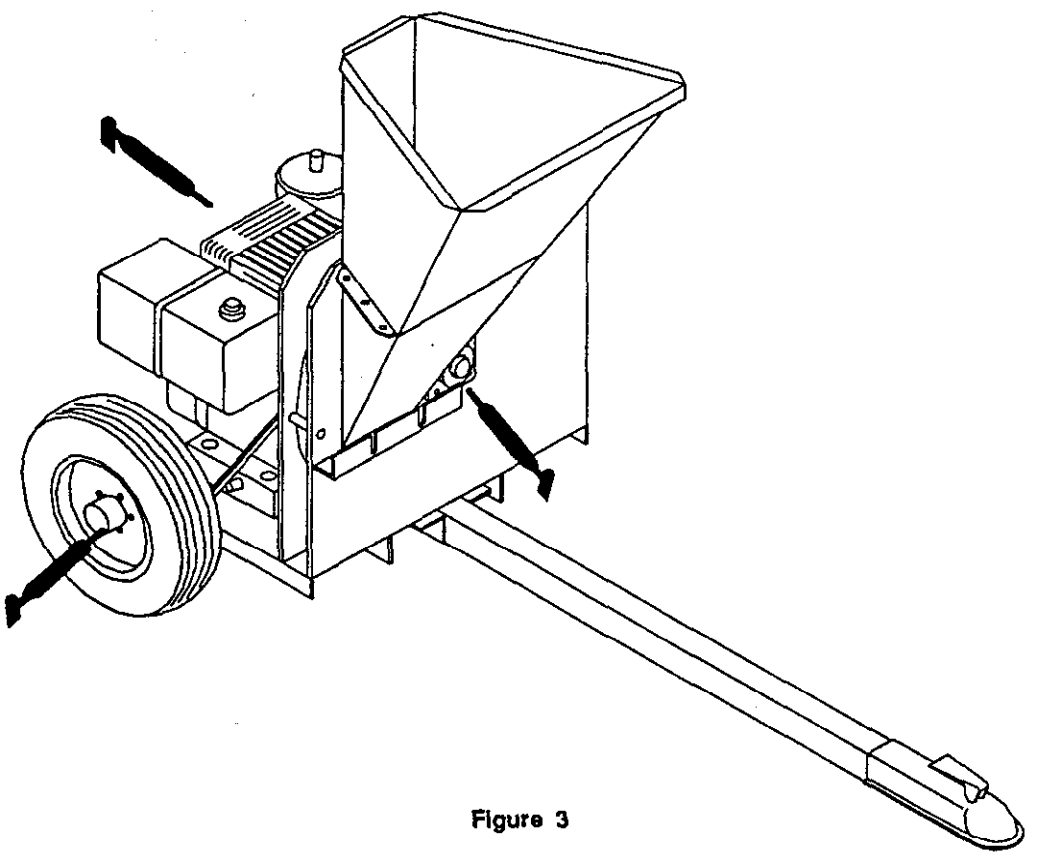

Figure 3

MAINTENANCE

ENGINE MAINTENANCE

1. Change engine oil after first 5 hours of operation. Thereafter, change every 25 hours of operation. Remove drain plug and drain oil while engine is warm. Replace drain plug. Remove oil filler plug and refill with fresh oil of proper grade (10W30).

2. Take care to remove dirt around filler plug. Be sure oil level is maintained FULL, TO THE POINT OF OVERFLOWING.

3. Clean engine air cleaner and re-oil every 25 hours under normal conditions. The capacity of the "OIL FOAM" air cleaner is adequate for a full seasons use without cleaning in average service. Clean every few hours under extremely dusty conditions.

A. Remove wing nut.

B. Remove air cleaner carefully to prevent dirt from entering carburetor.

C. Take air cleaner apart.

(1) Wash foam element in kerosene or liquid detergent and water to remove dirt.

(2) Wrap foam in cloth and squeeze dry.

(3) Saturate foam in engine oil.

(4) Squeeze to remove excess oil.

D. Re-assemble parts and fasten to carburetor with wing nut.

4. Continued operation with a clogged cooling system causes severe over-heating and possible engine damage. Remove blower housing and clean regularly.

5. Clean spark plug and reset gap at .030" every 100 hours of operation.

NOTE: Major engine repairs should not be attempted unless you have a thorough knowledge of internal combustion engines.

6. Minor carburetor adjustments may be required to compensate for differences in fuel, temperature, altitude and load.

A. Initial carburetor adjustment: Close needle valve (turn clockwise). Then open 1-1/2 turns (turn counterclock-wise). This will permit the engine to be started and warmed up before making final adjustments.

B. Final carburetor adjustments: With engine running at normal operating speed (approx. 3300 RPM's without load) close needle valve (turn clockwise) until engine begins to lose speed (lean mixture). Then slowly open needle valve (turn counterclockwise) past the point of smoothest operation until engine begins to run unevenly. This mixture should be rich enough for best performance under load. If engine tends to stall or die out, it usually indicates that the mixture is slightly lean, and it may be necessary to open the needle valve slightly to provide a richer mixture. This richer mixture may cause slightly rough idling.

BELT TENSION (Fig. 4)

The idler belt has 1/4" deflection with 5 lbs. of force and the idler handle locks over center when properly adjusted.

To decrease tension, rotate the adjusting nuts counterclockwise; clockwise to increase tension.

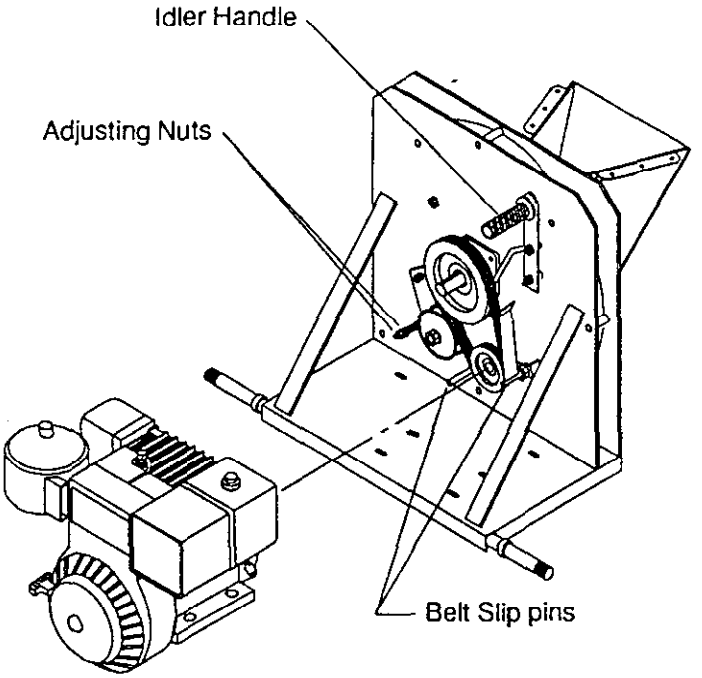

Figure 4

MAINTENANCE (Continued)

BLADE MAINTENANCE (Fig. 5)

The blades, when new, are 1-1/2" wide. After sharpening several times, the blade width is going to be reduced. When the width is reduced to 1-1/4" the blades need to be replaced. **ALWAYS** sharpen at a 45 degree angle to maintain proper chipping of material.

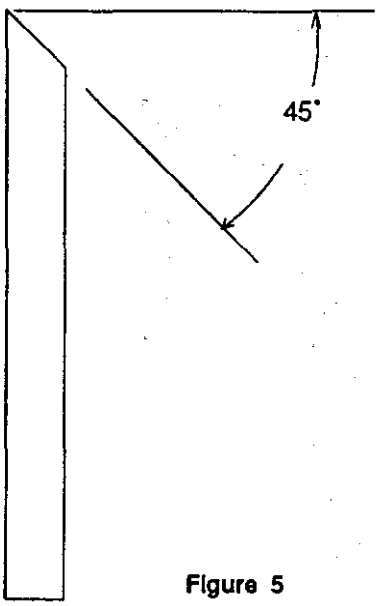

Figure 5

BLADE SHARPENING MAINTENANCE

The life of the chipper blade is determined by the time and care spent in keeping the cutting edges sharp. Its life between, regrinds and the quality of work it turns out depends largely on the care taken in resharpening. Maintenance of the chipper blades should be a high priority to add longer life and superior performance, which in turn lowers cost.

The blade is no better than its cutting edge. Dull blades are caused by:

1. Stopping the feed of the wood and allowing the blades to rub against the unfed wood.

2. Excessive resin or glue on material being cut.

3. Feed speed too slow for chipping machine speed.

4. Use of wrong cutting angles and bevels.

5. Improper care of blades.

6. Long overdue blade changes.

7. Poor grinding procedures.

When sharpening the blades there are a few procedures to follow to get the best performance out of the blades.

1. Keep the grinding wheel speed between 3500 and 4500 RPM. The depth of each cut should be no more than .002 with each pass.

2. More blades are ruined by excessive heat during grinding than any other cause. Excessive heat can be caused by excessive speed, insufficient cooling and the grinding wheel being too hard.

3. The grinding wheel should be a SA-46-G8-VI or equivalent. Meaning: SA (abrasive-friable aluminous oxide), 46 (grain size-medium), G (hardness-soft), 8 (structure-open), VI (bond-vitrified).

4. After grinding, the blades should be honed to remove the wire or feather edge left by the grinding wheel.

5. Follow the specifications listed in the manual on the degree to sharpen and the length at which the blade can no longer be used.

6. When replacing the blades with new blades, always replace every blade. When resharpening the blades should be kept as close as possible to the same length. Various lengths of blades could result in a drum that is out of balance.

MAINTENANCE (Continued)

REPLACING CUTTER BLADES (Fig. 6)

IMPORTANT: Remove wire from spark plug. This will prevent accidental starting of the engine.

⚠ CAUTION

CUTTER BLADES ARE EXTREMELY SHARP.

1. To remove cutter blades, remove cover plate. Remove any material from screw heads before loosening. Remove the two inside socket head cap screws with a 5/32" allen wrench. Loosen the two remaining screws but do not remove.

2. Rotate flywheel and remove the two remaining socket head capscrews through the large "window" opening inside the chute. Remove the blades through the opening.

3. To replace the cutter blades, position the blade in the milled slot and replace the two outside screws finger tight. Make sure the heads of the screws will clear the cutter bar before rotating.

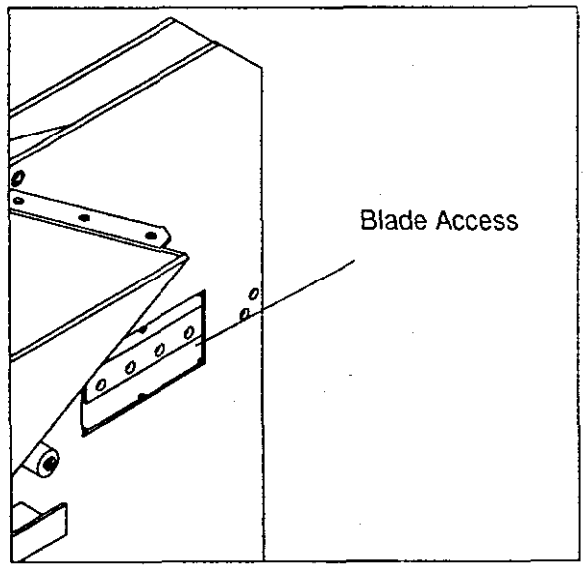

Figure 6

4. Rotate the flywheel and replace the two remaining screws through the large hole on the front side of the machine.

5. After all screws are in place, tighten firmly with the allen wrench and replace cover.

REPLACING CUTTER BAR (Fig. 7)

1. To remove the cutter bar, remove the three bolts and nuts and pull the cutter bar free. Loosen the two adjustment spades.

2. To replace the cutter bar, align the holes in the cutter bar bracket. Insert bolts and install nuts finger tight. Rotate the flywheel slowly by hand until the cutter blades are aligned with the cutter bar and check for proper clearance. After tightening the bolts and nuts, re-check both cutter blades for proper clearance.

NOTE: Should the cutter bar become dull, turn bar over and use bottom sharp edge.

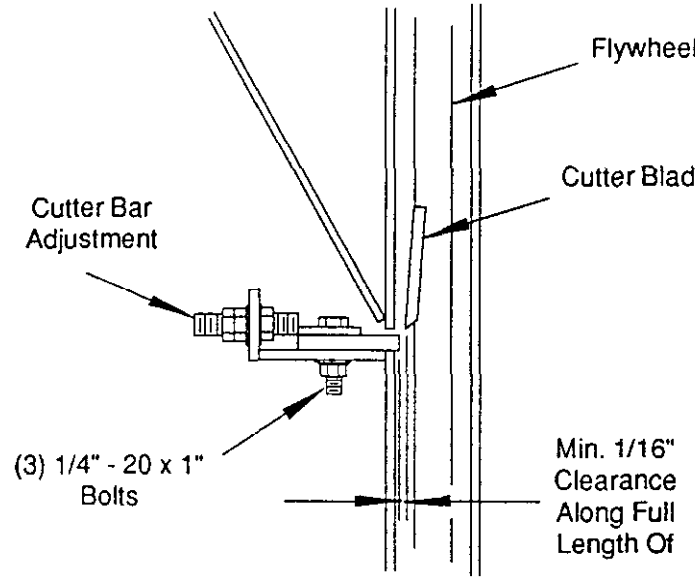

Figure 7

TROUBLE SHOOTING

SYMPTOM	PROBLEM	CORRECTION
ENGINE FAILS TO START	• Spark plug wire loose or disconnected. • Spark plug improperly gapped. • Key switch worn out.	• Secure good connection. • Regap spark plug. • Replace switch.
ENGINE FALTERS OR STALLS	• Air cleaner dirty or plugged.	• Clean and re-oil element.
ENGINE OVERHEATS	• Crankcase oil level low. • Cooling fins dirty or plugged.	• Keep oil at proper level. • Clean cooling fins.
ENGINE RUNS ERRATICALLY	• Carburetor adjustment required for variations in fuel, temperature or altitude.	• Adjust carburetor.
FLYWHEEL FAILS TO TURN	• Over feeding. • Object other than wood in machine.	• Turn front bearing bolt clockwise until free. • Turn front bearing bolt clockwise until free and remove object.
HAMMER NOISE FROM BELT AREA	• Excessive wear in one spot of belt.	• Replace belt.
EXCESSIVE RATTLE OF ENGINE *	• Vibration strap loose or missing.	• Replace and tighten.
*** Note: Over Speeding Is Not Recommended And Can Cause Excessive Vibration.**		

STORAGE

1. Thoroughly clean the chipper so it is free of dirt, leaves and debris.

2. Inflate tires to 50 PSI.

3. Check all fasteners. Tighten as necessary.

4. Grease or oil all grease fittings and bearings. Wipe off excess lubricant.

5. Check the tension and condition of the drive belt.

6. Remove the blades and sharpen them.

ENGINE

1. Drain the engine oil from the oil pan and replace drain plug.

2. Remove and discard the oil filter. Install a new oil filter.

3. Refill oil pan with 1-1/2 pints of SF - CC, 10W30 motor oil.

4. Start the engine and run at idle speed for approximately two minutes.

5. Stop the engine.

6. Thoroughly drain all fuel from the fuel tank, lines and the fuel pump filter.

7. Flush the fuel tank with fresh clean gasoline.

8. Re-secure all fuel system fittings.

IDENTIFICATION AND ORDERING

MODEL AND SERIAL NUMBER

The YARD CHIPPER 1325 has two identification numbers: a model and serial number. The two numbers are stamped on a plate riveted to the main body. In any correspondence concerning the YARD CHIPPER 1325, supply model and serial numbers to be sure that the correct information and replacement parts are obtained.

To order replacement parts from an authorized TORO Distributor,supply the following information.

1. Model and serial numbers of the machine.

2. Part number, description and quantity of parts desired.

Note: Do not order by reference number if a parts catalog is being used; use the part number.

MAINTENANCE CHART

Date	Hours Used	Oil Change	Lubrication	Tire Pressure	Drive Belt	Storage		

MAINTENANCE CHART

Date	Hours Used	Oil Change	Lubrication	Tire Pressure	Drive Belt	Storage		

The Toro Promise

A ONE YEAR LIMITED WARRANTY

The Toro Company promises to repair your TORO Product if defective in materials or workmanship. The following time periods from the date of purchase apply:

Commercial Products ..... 1 Year

The costs of parts and labor are included, but the customer pays the transportation costs on walk rotary mowers with cutting widths of less than 25".

If you feel your TORO product is defective and wish to rely on The Toro Promise, the following procedure is recommended:

1. Contact your Authorized TORO Distributor or Commercial Dealer (the Yellow Pages of your telephone directory is a good reference source).
2. The TORO Distributor or Commercial Dealer will advise you on the arrangements that can be made to inspect and repair your product.
3. The TORO Distributor or Commercial Dealer will inspect the product and advise you whether the product is defective and, if so, make all repairs necessary to correct the defect without an extra charge to you.

If for any reason you are dissatisfied with the distributor's analysis of the defect or the service performed, you may contact us.

Write:

TORO Commercial Products Service Department
100 Industrial Parkway
Industrial Airport, Ks. 66031

The above remedy of the product defects through repair by an Authorized TORO Distributor or Commercial Dealer is the purchaser's sole remedy for any defect.

THERE IS NO OTHER EXPRESS WARRANTY. ALL IMPLIED WARRANTIES OF MERCHANTABILITY AND FITNESS FOR USE ARE LIMITED TO THE DURATION OF THE EXPRESS WARRANTY.

Some states do not allow limitations on how long an implied warranty lasts, so the above limitation may not apply to you.

This Warranty applies only to parts or components which are defective and does not cover repairs necessary due to normal wear, misuse, accidents, or lack of proper maintenance. Regular, routine maintenance of the unit to keep it in proper condition is the responsibility of the owner.

All warranty repairs reimbursable under the Toro Promise must be performed by an Authorized TORO Commercial Dealer or Distributor using Toro approved replacement parts.

Repairs or attempted repairs by anyone other than an Authorized TORO Distributor or Commercial Dealer are not reimbursable under the Toro Promise. In addition, these unauthorized repair attempts may result in additional malfunctions, the correction of which is not covered by warranty.

THE TORO COMPANY IS NOT LIABLE FOR INDIRECT, INCIDENTAL OR CONSEQUENTIAL DAMAGES IN CONNECTION WITH THE USE OF THE PRODUCT INCLUDING ANY COST OR EXPENSE OF PROVIDING SUBSTITUTE EQUIPMENT OR SERVICE DURING PERIODS OF MALFUNCTION OR NON-USE.

Some states do not allow the exclusion or limitation of incidental or consequential damages, so the above limitation or exclusion may not apply to you.

This warranty gives you specific legal rights, and you may also have other rights which vary from state to state.

COUNTRIES OTHER THAN THE UNITED STATES OR CANADA

Customers who have purchased TORO products exported from the United States or Canada should contact their TORO Distributor (Dealer) to obtain guarantee policies for your country, province or state. If for any reason you are dissatisfied with your Distributor's service or have difficulty obtaining guarantee information, contact the TORO importer. If all other remedies fail, you may contact us at The Toro Company.