FORM NO. 01-502-0530.1

TORO®

MODEL NO. 44850 - 20101
MODEL NO. 44860 - 20101

OPERATOR'S MANUAL

AERATOR 686/AERATOR 687

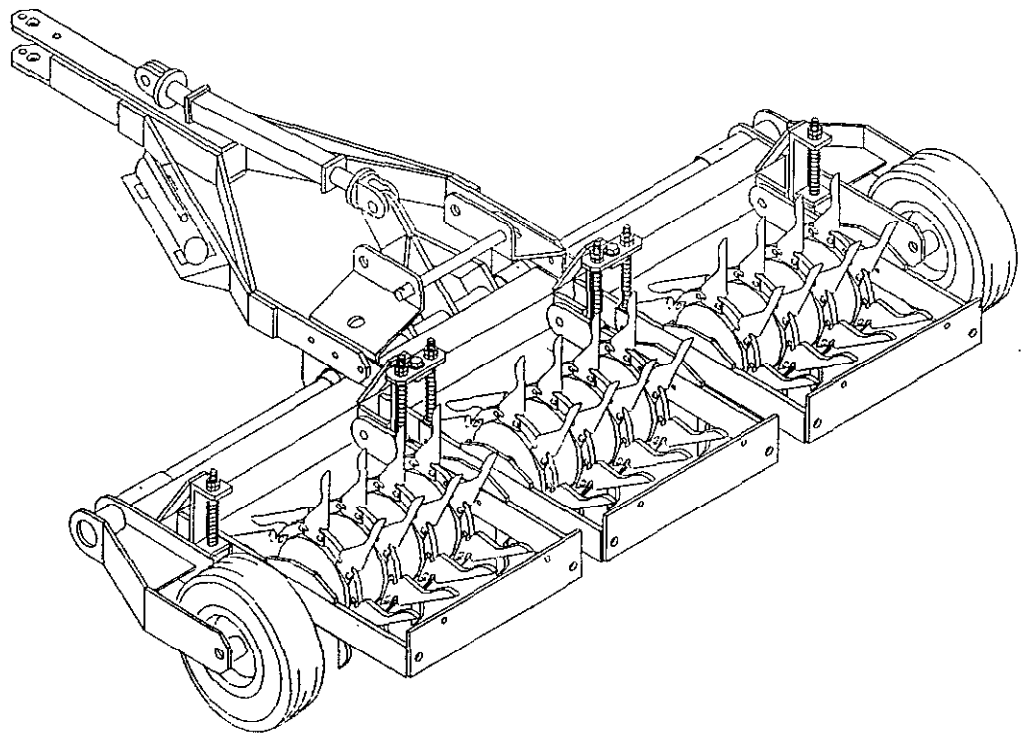

© The TORO Company - 1996
All Rights Reserved

FOREWORD

Thank you for buying a high quality Toro turf care product. To get the best performance from this machine, operate and maintain it according to the instructions in this manual.

Toro also wants to stress the importance of safety. You and anyone else using or maintaining this machine are strongly urged to read this manual, especially all the safety instructions.

DANGER, WARNING and CAUTION, used with the triangular safety alert symbol, highlight safety messages. Always read and understand these messages because they relate to personal injury and your safety.

If you ever need help or have questions about your new Toro turf care product, contact your local Authorized Toro Distributor. The Toro Distributor has a complete supply of replacement parts, a full line of accessories and a professional service staff to support you. Keep your Toro all Toro. Buy genuine Toro parts and accessories.

TABLE OF CONTENTS

	Page
SAFETY INSTRUCTIONS	3 - 4
SAFETY AND INSTRUCTION DECALS	4
SPECIFICATIONS	5
BEFORE OPERATING	6
OPERATING INSTRUCTIONS	6
LUBRICATION	7
MAINTENANCE	8 - 9
IDENTIFICATION AND ORDERING	10
MAINTENANCE CHART	11
THE TORO PROMISE	Back Cover

SAFETY INSTRUCTIONS

The safety alert symbol means CAUTION, WARNING or DANGER - "personal safety instruction". Read and understand the instruction because it has to do with safety. Failure to comply with the instruction may result in personal injury.

BEFORE OPERATING

1. Read and understand the contents of this manual before starting and operating the machine. Become familiar with all controls and know how to stop quickly. A free replacement manual is available by sending complete Model and Serial Number to:

The TORO Company
8111 Lyndale Avenue South
Minneapolis, Minnesota 55420

2. Do not allow children to operate the machine. Do not allow adults to operate the machine without proper instruction.

3. **Never** operate the machine while under the influence of drugs or alcohol.

4. Keep all shields and safety devices in place. If a shield, safety device or decal becomes damaged, malfunctioning or illegible, repair or replace it before operation is commenced. Also tighten loose nuts, bolts to ensure machine is in safe operating condition. This includes all shields on the PTO.

5. Before each use, be sure all bolts and nuts are tight. Check the general condition of the tines.

6. Do not alter this equipment in any manner which may cause hazardous conditions.

WHILE OPERATING

7. Using the machine demands attention, and to prevent loss of control:

A. Operate only in daylight or when there is good artificial light.

B. Drive slowly.

C. Watch for hole or other hazards.

D. Look behind machine before backing up.

E. Do not drive close to a sand trap, ditch, creek or other hazard.

F. Reduce speed when making sharp turns and when turning on a hillside.

G. Avoid sudden stops and starts.

8. Operator must be skilled and trained in how to drive on hillsides. Failure to use caution on slopes or hills may cause loss of control possibly resulting in personal injury or death.

9. If tractor or towing vehicle engine stalls or machine loses headway and cannot make it to the top of a slope, do not turn machine around. Always back slowly straight down the slope.

SAFETY INSTRUCTIONS (Continued)

10. Do not carry passengers on the machine or tractor and keep everyone away from the areas of operation.

11. Before getting off the tractor or towing vehicle seat:

A. Place the tractor or towing vehicle in neutral position and put the engine in idle position.

B. Set the parking brake and disengage the PTO.

C. Shut the engine off and remove key from ignition switch. Wait for all movement to stop before getting off seat.

12. ALWAYS follow all safety precautions in the tractor's or towing vehicles operator manual pertaining to attachments.

MAINTENANCE

13. Remove the key from the tractor's ignition switch to prevent accidental starting of the engine when servicing, adjusting or storing the machine.

14. If major repairs are ever needed or assistance desired,contact an Authorized TORO Distributor.

15. Make sure machine is in safe operating condition by keeping nuts, bolts and screws tight.

SAFETY AND INSTRUCTION DECALS

The following safety and instruction decals are installed on the unit. Replace any decals that becomes damaged or illegible. Part numbers for decals are listed below and in your Parts Catalog. Order replacements from your Authorized Toro Distributor.



ON R.H. TRANSPORT LOCK PLATE (686)
ON R.H. LIFT ARM (687)
(Part No. 01-506-0340)

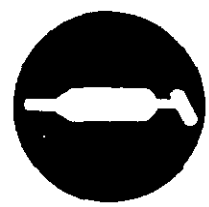

NEAR BEARINGS, WHEELS
& GREASE FITTINGS
(Part No. 01-506-0550)

SPECIFICATIONS AERATOR 686

FRAME: Welded tubular steel; divided into 3 sections, each section moves horizontally and diagonally to follow contour, spring loaded (Pat. Pend.)

AERATING WHEELS: (12) 70 lb. castings (4 per section) with permanent roll pin every other hole.

SHAFT: 1-1/4", machined to 1"

TINES: (96), 8 per wheel, secured with 1bolt, roll pin in wheel secures second hole in tine; 1/2 or 3/4" open or closed, 4" slicing blades are available. (One set standard)

BEARINGS: Self sealed, self aligned

TRANSPORT WHEELS: 4.80 x 8 - 2 ply

HITCH: Drop pin.

LIFT MECHANISM: Hand hydraulic pump to (1) 10" stroke cylinder.

SPRINGS: (4) to assist down pressure on tires.)

AERATING SWATH: 78"

PATTERN: 6" on center

OPERATING SPEED: 1 - 10 MPH, depending on conditions

OVERALL WIDTH: 90"

WEIGHT: Approx. 1350 lbs. w/o weights

OPTIONS: 40 lb. weights, 3 per set/2 sets max. Remote hose for tractor hook up

SPECIFICATIONS AERATOR 687

FRAME: Welded tubular steel; divided into 3 sections, each section moves horizontally and diagonally to follow contour, spring loaded (Pat. Pend.)

AERATING WHEELS: (12) 70 lb. castings (4 per section) with permanent roll pin every other hole.

SHAFT: 1-1/4", machined to 1"

TINES: (96), 8 per wheel, secured with 1 bolt, roll pin in wheel secures second hole in tine; 1/2" or 3/4" open or closed, 4" slicing blades are available. (One set standard)

BEARINGS: Self sealed, self aligned

HITCH: Drop pin.

SPRINGS: (4) to assist down pressure on tires.)

AERATING SWATH: 78"

PATTERN: 6" on center

OPERATING SPEED: 1 - 10 MPH, depending on conditions

OVERALL WIDTH: 82"

WEIGHT: Approx. 1120 lbs. w/o weights

OPTIONS: 40 lb. weights, 3 per set/2 sets max. Remote hose for tractor hook up

BEFORE OPERATING

CHECK TIRE PRESSURE - AERATOR 686

1. Check tire pressure before each use. Maintain tire pressure at 60 PSI.

ATTACH AERATOR 687 TO TRACTOR

1. Lower the three point hitch arms of the tractor.

2. Position the aerator so that the three point hitch arms of the tractor line up with the lift arms of the aerator.

3. Attach the arms of the tractor to the hitch pins on the aerator lift arms.

4. Attach the tractors stabilizer bar to the 3/4" x 4" bolt on the top of the lift arms.

ATTACH AERATOR 686 TO TOWING VEHICLE

1. Attach the hitch of the aerator to the tongue of the towing vehicle using the towing vehicle's hardware.

INSTALLING TINES (Fig. 1)

IMPORTANT: AFTER attaching the aerator to the tractor or towing vehicle the tines may be installed.

1. Follow the instructions referring to attaching the aerator to the tractor or towing vehicle.

2. Start at the outerside casting and install the tines as shown. Install all 8 tines on the casting making sure the roll pin is in the front position (Fig. 1). Use 1/2" x 1-3/4" bolts for the second hole ans secure tightly.

3. Repeat on the second casting and continue until all 96 tines are installed.

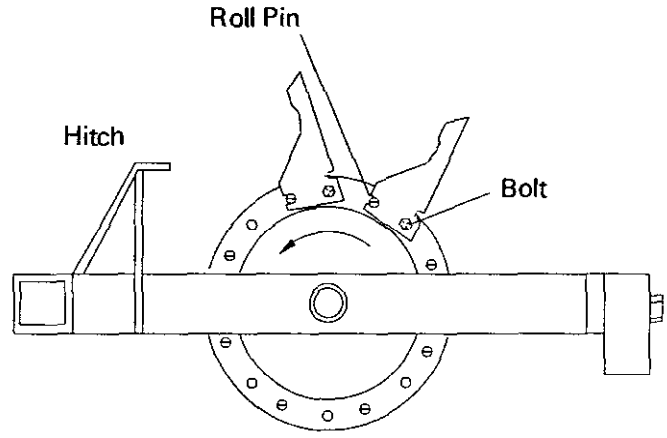

Figure 1

OPERATING INSTRUCTIONS

AERATING PROCEDURE

1. Start tractor engine and run at a low RPM.

2. Run tractor engine to 1100 RPM.

3. Slowly lower the aerator while the tractor or towing vehicle is moving slowly forward.

4. As aerating begins increase speed of the tractor or towing vehicle.

TRANSPORTING AERATOR 686 (Fig. 2)

1. When transporting the Aerator 686, place the lock pin in the rear hole as shown. This prevents the aerator from dropping in case of accidental release of oil in the cylinder.

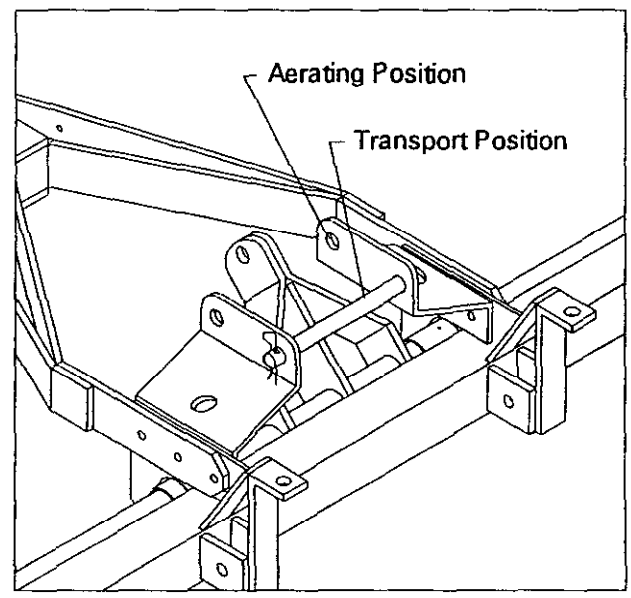

Figure 2

LUBRICATION

BEARINGS (Fig. 3)

The aerator has six self sealing bearings that must be lubricated with a No. 2 Lithium based grease.

IMPORTANT: Lubricate the bearings as often as necessary to maintain a slight leakage on the seals. Too much grease can cause overheating.

WHEELS AND WHEEL BEARINGS AERATOR 686 (Fig. 3)

Grease fittings weekly or every 40 operating hours. Use a No. 2 Lithium based grease.

GREASE FITTINGS AERATOR 686 (Fig. 3)

1. Grease the grease fittings weekly or every 40 operating hours. Use a No. 2 Lithium based grease.

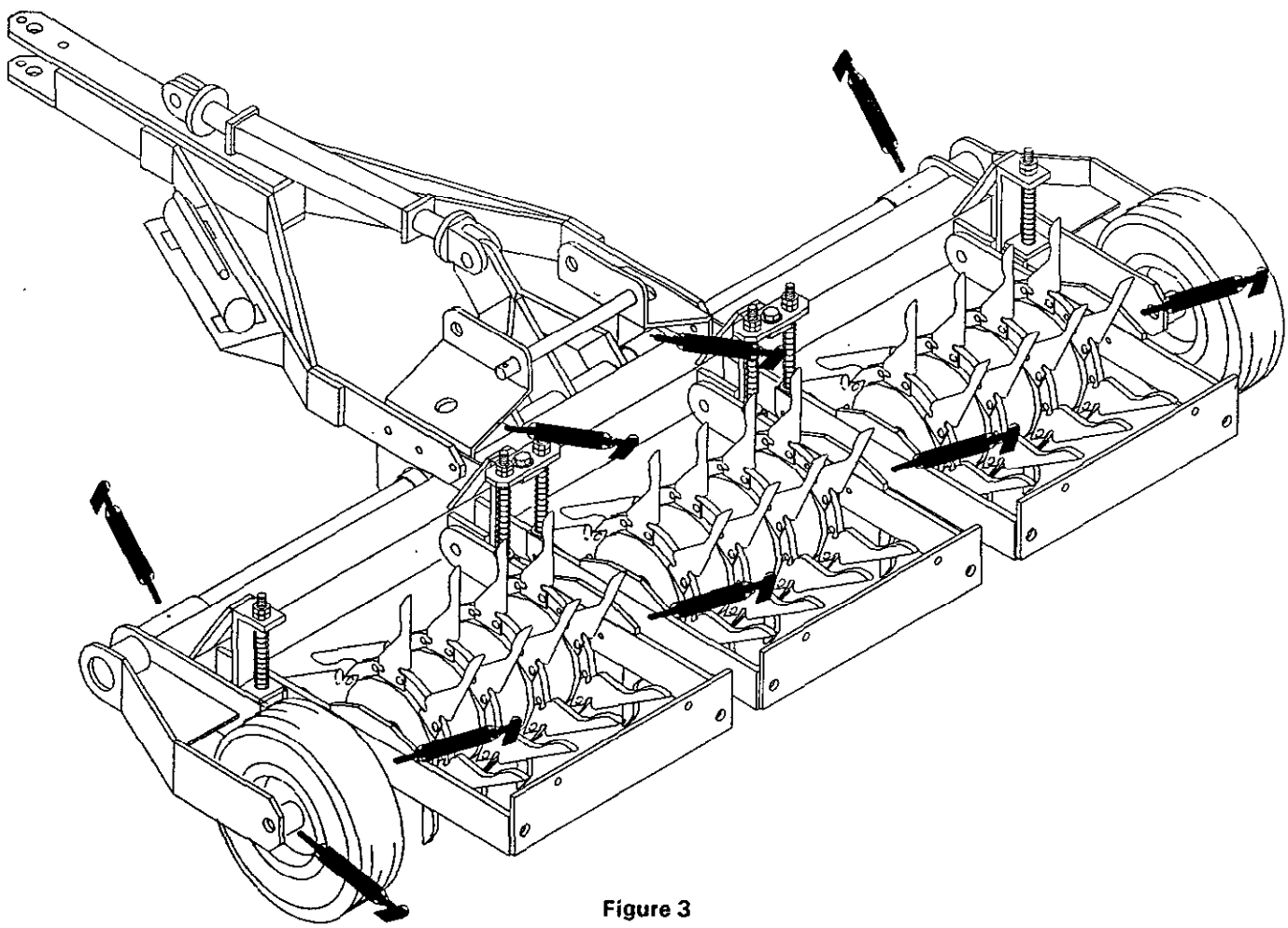

Figure 3

MAINTENANCE

MAIN ARMS (Fig. 4)

The 6 main arms pivot freely horizontally and vertically to allow the unit to follow the contour of the ground. A bronze bushing is pressed inside the pivot holes between the main arm and mainframe. The bronze bushing is 1/8" longer than the thickness of both plates combined. The 5/8 x 2" bolt should be tightened against the bushings, not the arms to allow it to pivot freely. The bronze bushings should be checked every 100 hours of operation for signs of wear. Replace any worn bushings.

SPRINGS (Fig. 4)

The purpose of the springs is to distribute the weight evenly and reduce the shock load on the pivot points. The springs are adjusted evenly across to level the unit. Use the nuts on top of the spring rod (Item A) to adjust the springs.

IMPORTANT: NEVER adjust the spring so the coils are completely compressed. Allow at least 1/16" between coils.

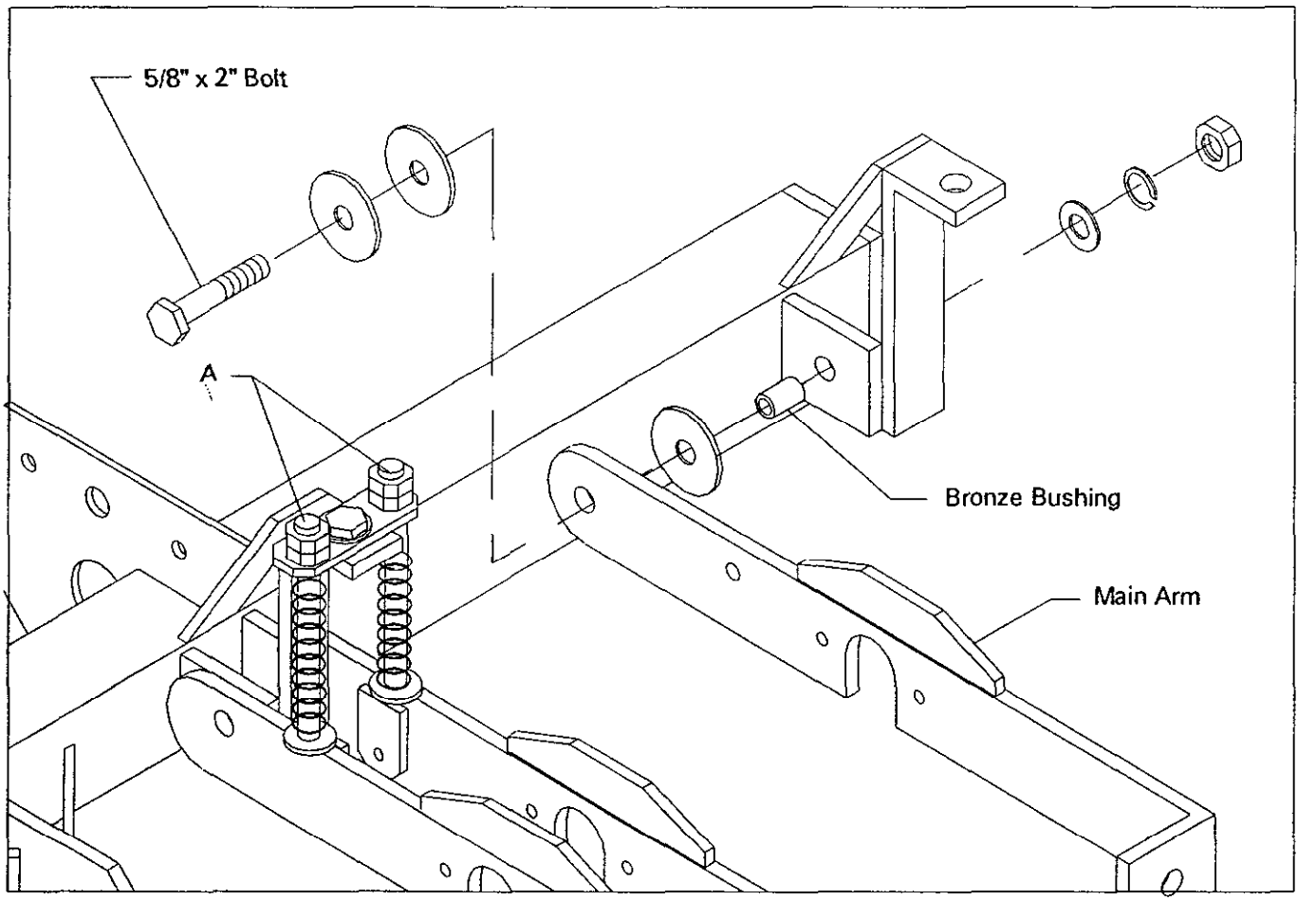

Figure 4

TINE WEAR (Fig. 5)

To obtain maximum aerating performance always check the tines for wear before every use. Severely worn tines are easy to bend or break and will leave the cores in the ground. See Fig. 5 for examples of tine wear.

Always clean cores out of tines before storage. Cores left in tines for extended periods can cause pitting on the inside of the tine. The pits in the tine keep the core from ejecting.

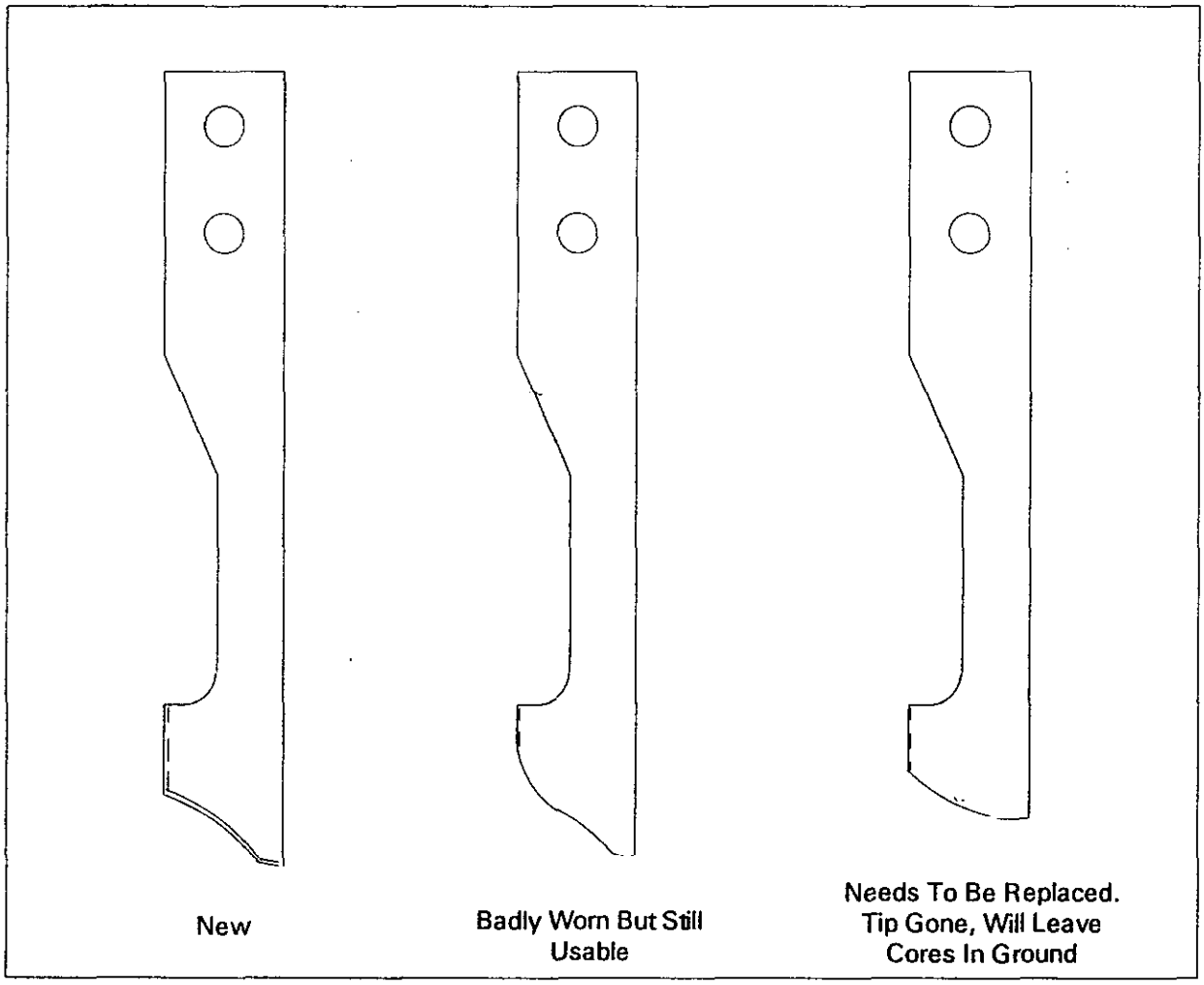

Figure 5

STORAGE

1. Thoroughly clean the aerator.

2. Inflate tires to 60 PSI.

3. Check all fasteners. Tighten as necessary.

4. Check the condition of the tines. Replace any broken or worn tines. Tighten all fasteners attaching the tines to the castings.

5. Grease or oil all grease fittings and bearings. Wipe off excess lubricant.

IDENTIFICATION AND ORDERING

MODEL AND SERIAL NUMBER

The AERATOR 686 and AERATOR 687 has two identification numbers: a model and serial number. The two numbers are stamped on a plate which is riveted to the main arm. In any correspondence concerning the AERATOR, supply model and serial numbers to be sure that the correct information and replacement parts are obtained.

To order replacement parts from an authorized TORO Distributor, supply the following information.

1. Model and serial numbers of the machine.

2. Part number, description and quantity of parts desired.

Note: Do not order by reference number if a parts catalog is being used; use the part number.

MAINTENANCE RECORD

Date								

The Toro Promise

A ONE YEAR LIMITED WARRANTY

The Toro Company promises to repair your TORO Product if defective in materials or workmanship. The following time periods from the date of purchase apply:

Commercial Products ..... 1 Year

The costs of parts and labor are included, but the customer pays the transportation costs on walk rotary mowers with cutting widths of less than 25".

If you feel your TORO product is defective and wish to rely on The Toro Promise, the following procedure is recommended:

1. Contact your Authorized TORO Distributor or Commercial Dealer (the Yellow Pages of your telephone directory is a good reference source).
2. The TORO Distributor or Commercial Dealer will advise you on the arrangements that can be made to inspect and repair your product.
3. The TORO Distributor or Commercial Dealer will inspect the product and advise you whether the product is defective and, if so, make all repairs necessary to correct the defect without an extra charge to you.

If for any reason you are dissatisfied with the distributor's analysis of the defect or the service performed, you may contact us.

Write:

TORO Commercial Products Service Department
8111 Lyndale Avenue South
Minneapolis, Minnesota 55420

The above remedy of the product defects through repair by an Authorized TORO Distributor or Commercial Dealer is the purchaser's sole remedy for any defect.

THERE IS NO OTHER EXPRESS WARRANTY. ALL IMPLIED WARRANTIES OF MERCHANTABILITY AND FITNESS FOR USE ARE LIMITED TO THE DURATION OF THE EXPRESS WARRANTY.

Some states do not allow limitations on how long an implied warranty lasts, so the above limitation may not apply to you.

This Warranty applies only to parts or components which are defective and does not cover repairs necessary due to normal wear, misuse, accidents, or lack of proper maintenance. Regular, routine maintenance of the unit to keep it in proper condition is the responsibility of the owner.

All warranty repairs reimbursable under the Toro Promise must be performed by an Authorized TORO Commercial Dealer or Distributor using Toro approved replacement parts.

Repairs or attempted repairs by anyone other than an Authorized TORO Distributor or Commercial Dealer are not reimbursable under the Toro Promise. In addition, these unauthorized repair attempts may result in additional malfunctions, the correction of which is not covered by warranty.

THE TORO COMPANY IS NOT LIABLE FOR INDIRECT, INCIDENTAL OR CONSEQUENTIAL DAMAGES IN CONNECTION WITH THE USE OF THE PRODUCT INCLUDING ANY COST OR EXPENSE OF PROVIDING SUBSTITUTE EQUIPMENT OR SERVICE DURING PERIODS OF MALFUNCTION OR NON-USE.

Some states do not allow the exclusion or limitation of incidental or consequential damages, so the above limitation or exclusion may not apply to you.

This warranty gives you specific legal rights, and you may also have other rights which vary from state to state.

COUNTRIES OTHER THAN THE UNITED STATES OR CANADA

Customers who have purchased TORO products exported from the United States or Canada should contact their TORO Distributor (Dealer) to obtain guarantee policies for your country, province or state. If for any reason you are dissatisfied with your Distributor's service or have difficulty obtaining guarantee information, contact the TORO importer. If all other remedies fail, you may contact us at The Toro Company.