FORM NO. 01-502-1080

TORO

MODEL NO. 44575 - 20101 & UP

OPERATOR'S MANUAL

COMMERCIAL CHIPPER 1820D

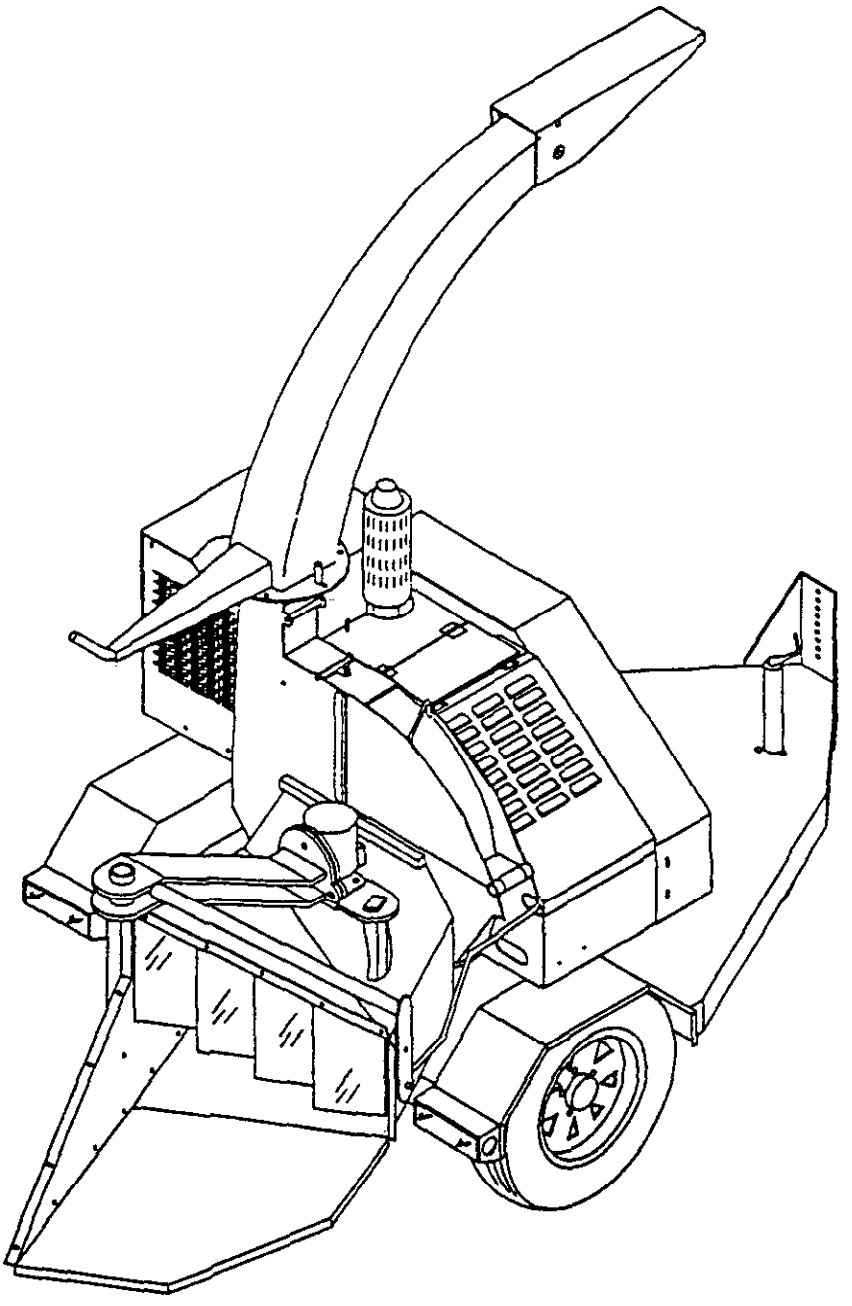

©The TORO Company - 1992

FOREWORD

Thank you for buying a high quality Toro turf care product. To get the best performance from this machine, operate and maintain it according to the instructions in this manual.

Toro also wants to stress the importance of safety. You and anyone else using or maintaining this machine are strongly urged to read this manual, especially all the safety instructions.

DANGER, WARNING and CAUTION, used with the triangular safety alert symbol, highlight safety messages. Always read and understand these messages because they relate to personal injury and your safety.

If you ever need help or have questions about your new Toro turf care product, contact your local Authorized Toro Distributor. The Toro Distributor has a complete supply of replacement parts, a full line of accessories and a professional service staff to support you. Keep your Toro all Toro. Buy genuine Toro parts and accessories.

TABLE OF CONTENTS

	Page
SAFETY INSTRUCTIONS	3 - 4
SAFETY AND INSTRUCTION DECALS	5 - 7
SPECIFICATIONS	8
BEFORE OPERATING	
Check Tire Pressure	9
Check Crankcase Oil	9
Fill Fuel Tank	9
Check Cooling System	10
Check Hydraulic System Oil	10
Connect Battery	10
CONTROLS	11 - 12
OPERATING INSTRUCTIONS	13 - 14
LUBRICATION	15 - 16
MAINTENANCE	16 - 18
HYDRAULIC SCHEMATIC	19
TROUBLESHOOTING	20
STORAGE	21
IDENTIFICATION AND ORDERING	21
MAINTENANCE CHART	22 - 23
THE TORO PROMISE	Back Cover

SAFETY INSTRUCTIONS

The safety alert symbol means CAUTION, WARNING or DANGER - "personal safety instruction". Read and understand the instruction because it has to do with safety. Failure to comply with the instruction may result in personal injury.

BEFORE OPERATING

1. Read and understand the contents of this manual before starting and operating the machine. Become familiar with all controls and know how to stop quickly. A free replacement manual is available by sending complete Model and Serial Number to:

The Toro Company
100 Industrial Parkway
Industrial Airport, Kansas 66031

2. Do not allow children to operate the machine. Do not allow adults to operate the machine without proper instruction.

3. **NEVER** operate the machine while under the influence of drugs or alcohol.

4. Keep all shields and safety devices in place. If a shield, safety device or decal becomes damaged, malfunctioning or illegible, repair or replace it before operation is commenced. Also tighten loose nuts, bolts to ensure machine is in safe operating condition.

5. Before each use, tighten all bolts and nuts.

6. Do not alter this equipment in any manner which may cause hazardous conditions.

7. Fill fuel tank with diesel fuel before starting the engine. Avoid spilling any fuel. Since diesel is flammable, handle it carefully.

A. Use a approved fuel container.

B. Do not fill tank when engine is hot or running.

C. Do not smoke while handling fuel.

D. Fill tank outdoors and up to about one inch (25 mm) from the top of the tank.

E. Wipe up any spilled fuel.

SAFETY INSTRUCTIONS (Continued)

WHILE OPERATING

DANGER

ROTATING CUTTING BLADES

- **NEVER** operate this machine unless drum cover and clean out door are securely fastened.
- **NEVER** open drum cover or clean out door while engine is running
- Drum may rotate for up to 5 minutes after engine is stopped.

8. Do not run the engine in a confined area without adequate ventilation. Exhaust fumes are hazardous and could possibly be deadly.

9. **NEVER** direct discharge chute at bystanders.

10. Always keep clear of discharge opening.

11. Do not touch engine, muffler or radiator while engine is running or soon after it is stopped. These areas could be hot enough to cause a burn.

12. **NEVER** leave operating machine unattended. Stop engine and remove key before leaving work area.

13. **NEVER** wear loose fitting clothing. Always wear safety glasses, gloves and ear protection.

MAINTENANCE

14. Remove the key from the ignition switch to prevent accidental starting of the engine when servicing, adjusting or storing the machine.

15. If major repairs are ever needed or assistance desired, contact an Authorized TORO Distributor.

16. Make sure machine is in safe operating condition by keeping nuts, bolts and screws tight.

17. To reduce potential fire hazard, keep the engine free of excessive grease, grass, leaves and accumulations of dirt.

18. Make sure all hydraulic line connectors are tight, and all hydraulic hoses and lines are in good condition before applying pressure to the system.

19. Keep body and hands away from pin hole leaks or nozzles that eject hydraulic fluid under high pressure. Use paper or cardboard, not hands, to search for leaks. Hydraulic fluid escaping under pressure can have sufficient force to penetrate skin and do serious damage. If fluid is injected into the skin it must be surgically removed within a few hours by a doctor familiar with this form of injury or gangrene may result.

20. Do not overspeed the engine by changing the governor settings. Maximum engine speed with no load is 3000 RPM. To ensure safety and accuracy, have an Authorized TORO Distributor check maximum engine speed with a tachometer.

21. Engine must be shut off before checking oil or adding oil to the crankcase.

SAFETY AND INSTRUCTION DECALS

The following safety and instruction decals are installed on the unit. Replace any decals that becomes damaged or illegible. Part numbers for decals are listed below and in your Parts Catalog. Order replacements from your Authorized Toro Distributor.

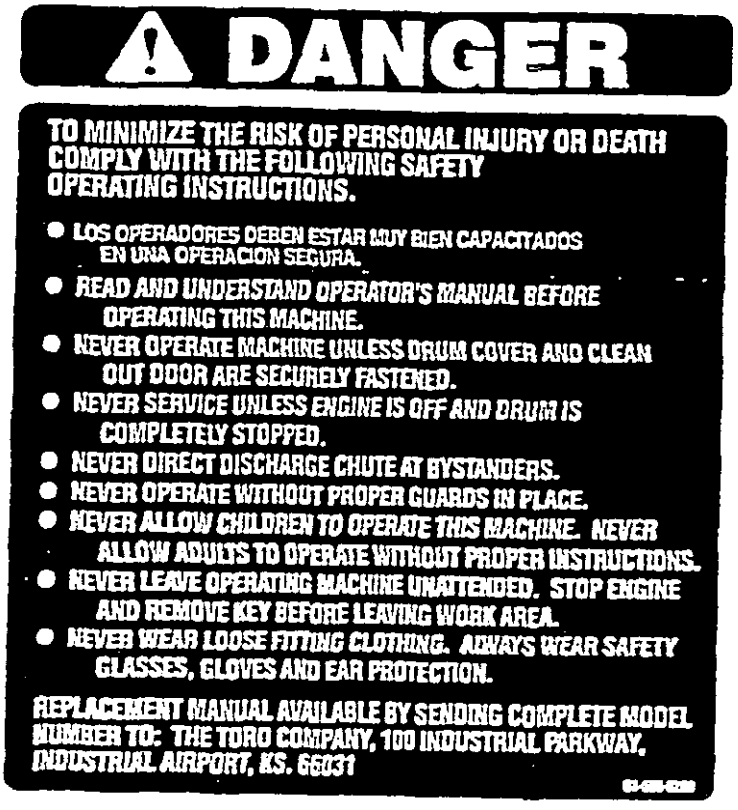

BOTH SIDES OF INFEED CHUTE
(Part No. 01-506-0260)

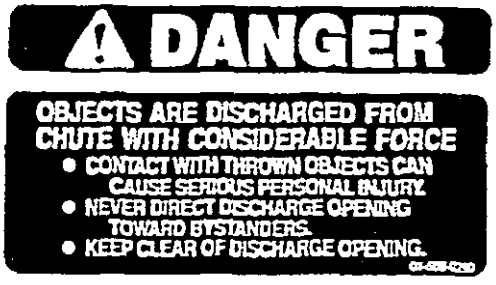

ON DISCHARGE CHUTE
(Part No. 01-506-0290)



ON ENGINE COWLING
(Part No. 01-506-0030)



ON CHIPPER HOOD
(Part No. 01-506-0020)

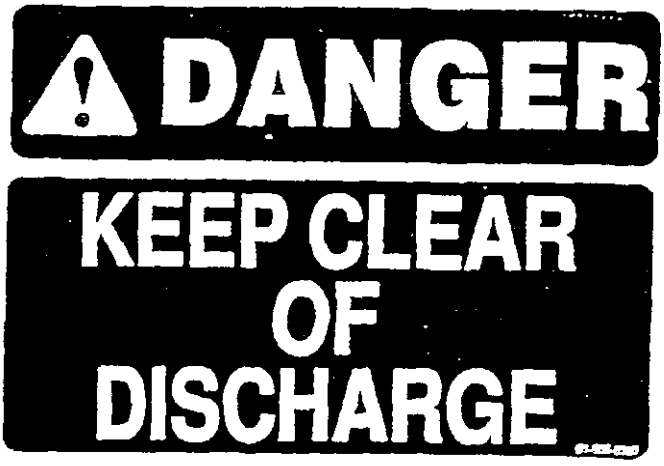

ON CHUTE DEFLECTOR
(Part No. 01-506-0300)

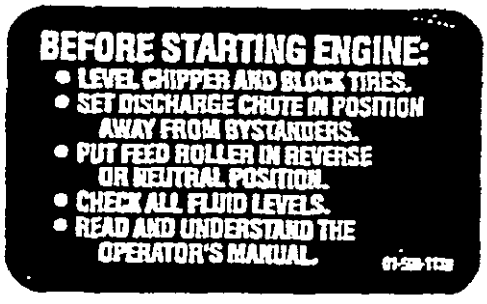

ON BELT GUARD
(Part No. 01-506-1130)



ON BELT GUARD
(Part No. 01-506-1140)

SAFETY AND INSTRUCTION DECALS (Continued)



BY FEED ROLLER LEVER
(Part No. 01-506-0320)



NEAR BEARINGS & GREASE POINTS
(Part No. 01-506-0550)



ON HYDRAULIC OIL TANK
(Part No. 01-506-0560)



ON FUEL TANK
(Part No. 01-506-0960)



ON FENDERS
(Part No. 01-506-0540)

SPECIFICATIONS

CHASSIS:
Axle: 3500 lb.
Tires: (2) B78-13
Lights: ICC approved
Frame: 10 gauge, 4" x 4" and 2" x 4" Tubing
Suspension: Leaf springs

ENGINE:
21.5 HP Kubota Diesel
Fuel Tank: 12 gallon capacity

CHIPPER:
170 degree rotation, no tools needed
Number of Knives: 2
Infeed opening: 12" x 20"
Disc RPM: 1350
Disc shaft size: 2-7/16"
Disc belt: BP93 x 4 power band
Bearings: (1) 2-7/16" Pillow block, (1) 2" pillow block
Disc sheave: 15.4"
Engine sheave: 7.0"

FEED:
Oil tank capacity: 7 quarts (10W30 SF-CC)
Hydraulic pump: Sundstrand
Feed roller: One, 10" diameter with teeth
Feed table width: 23"
Feed table height from ground: 27"
Discharge: 360 degree rotation, no tools needed.
Chute: 12 gage sides, 10 gage top

DIMENSIONS:
Width - 65"
Length - 112"
Height - 101" with chute "

OPTIONS:
Onan 24HP Engine, Hour Meter, Temperature sensing shut off switch

BEFORE OPERATING

CHECK TIRE PRESSURE

Check tire pressure before each use. Inflate to 50 PSI.

CHECK CRANKCASE OIL

Oil recommendations are: SAE 10W30 SF-CC

The engine is shipped with 1.22 gallons (4.6L) of oil in the crankcase; however, level of oil must be checked before and after the engine is first started.

1. Position the chipper on a level surface and make sure engine is off.

2. Remove the dipstick and wipe it with a clean rag. Push dipstick down into the tube and ensure it is fully seated. Pull dipstick out of the tube and check level of oil. If oil level is low add enough oil to raise level to top notch on dipstick.

IMPORTANT: Check level of oil after every 5 hours of operation or daily. Change oil after every 50 hours of operation and change the oil filter after the first 50 hours and every 100 hours thereafter. Change oil and filter more frequently when engine is operated in extremely dusty conditions.

FILL FUEL TANK WITH DIESEL FUEL (Fig. 1)

The engine runs on No. 2-D automotive type diesel fuel with a minimum cetane rating of 40.

Note: Higher cetane rated fuel may be required if machine is to be used at high altitudes and low atmospheric temperatures. Use No. 2-D diesel fuel at temperatures above 20 degrees F (-7deg. C).

Store fuel outside of buildings in a convenient location.

Keep all fuel containers free of dirt, water, scale and other contaminates. Many engine difficulties can be traced to contaminates in the fuel.

Use only metal containers for storage. DO NOT store the fuel in a galvanized metal container. A chemical reaction will result, which will plug the filters and cause possible fuel system damage.

DANGER

Because diesel fuel is flammable, caution must be used when storing or handling it. Do not fill fuel tank while engine is running, hot or when machine is in an enclosed area. Vapors may build up and be ignited by a spark or flame source many feet away. DO NOT SMOKE while filling the fuel tank to prevent possibility of explosion. Always fill fuel tank outside and wipe up any spilled diesel fuel before starting engine. Use a funnel or spout to prevent spilling diesel fuel before starting engine and fill tank to about 1 inch (25 mm) below the filler neck. Store diesel fuel in a clean safety approved container and keep the cap in place on the container. Keep diesel fuel in a cool, well ventilated place; never in an enclosed area such as a hot storage shed. To assure volatility, do not buy more than a 6 month supply of diesel fuel.

1. Remove the cap from the fuel tank and fill the 12 gallon tank to within 1 inch (25 mm) from the top with diesel fuel. Install fuel cap tightly.

2. Wipe up any diesel fuel that may have spilled to prevent a fire hazard.

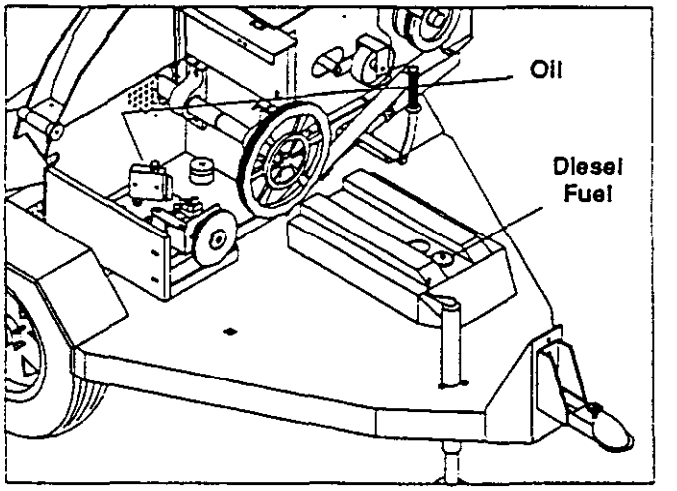

Figure 1

CHECK COOLING SYSTEM

Clean debris off screen and front of radiator daily, hourly if conditions are extremely dusty and dirty.

The cooling system is filled with a 50/50 solution of water and permanent ethylene glycol antifreeze. Check level of coolant at beginning of each day, before starting engine. Capacity of cooling system is approximately 3 quarts.

1. Carefully remove radiator cap. Coolant is pressurized and may be hot if engine has been running.

2. Check level of coolant in radiator. Level of coolant must be above the core and about 1 inch (25 mm) below bottom of filler tank.

3. If coolant level is low, replenish the system. DO NOT OVER FILL.

4. Install radiator cap.

CHECK HYDRAULIC SYSTEM OIL (Fig. 1)

The hydraulic system is designed to operate on any high quality detergent. Oil recommendations are: 10W30 SF-CC

1. Position the chipper on a level surface and make sure engine is off.

2. Pull out the dipstick from the oil filler tube. Check the level indicated on the dipstick.

3. If low add sufficient oil to bring to the "Full" mark. Do Not overfill.

IMPORTANT: When adding oil to the hydraulic system, use a funnel with a fine screen - 200 mesh - and ensure funnel and oil are immaculately clean. This procedure prevents accidental contamination of the hydraulic system which will damage the hydraulic system.

CONNECT BATTERY (Fig. 2)

The chipper is not shipped with a battery. The recommended battery size is a standard 12 volt car battery (22F2). The cranking amps should be what is standard for your climate.

1. Open the louvered cover on the chipper.

2. Place the battery beside the pump.

3. Slide the Battery Hold down bracket around the battery putting the threaded ends through the holes in the bracket on the frame.

4. Tighten with 3/8" hex nuts and flatwashers.

5. Install the positive cable to the positive (+) terminal and the negative cable to the negative (-) terminal of the battery and secure with carriage bolts and wing nuts.

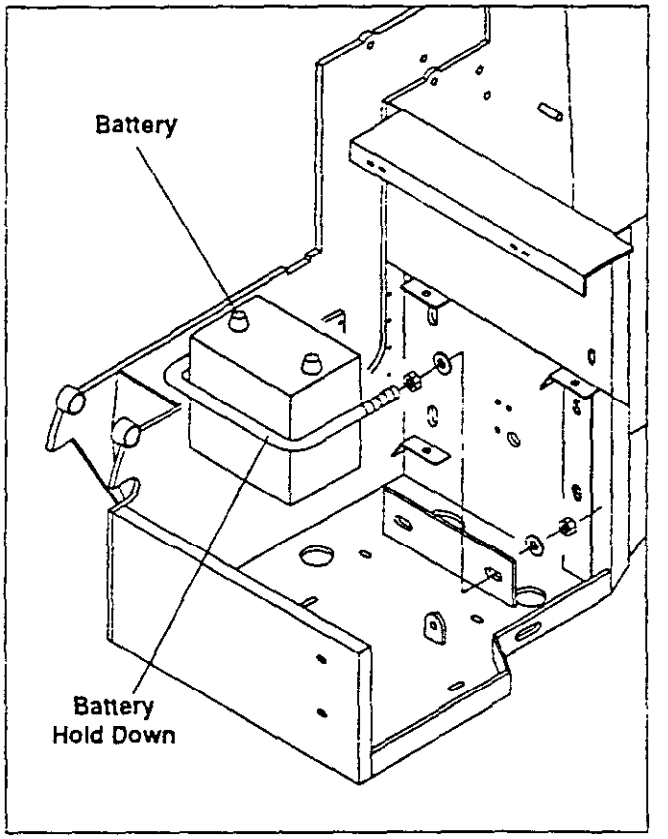

Figure 2

CONTROLS

THROTTLE CONTROL (Fig. 3)

Throttle is used to operate the engine at various speeds. Pulling the throttle control out increases engine speed; pushing in decreases engine speed. The throttle regulates the speed of the chipper drum.

KEY SWITCH (Fig. 3)

The key switch, which is used to start and stop the engine, has three positions: "OFF" and "ON" and "PREHEAT". The preheat is used before start up to warm up the engine.

FUEL COCK (Fig. 3)

The fuel cock is used to fill the fuel bulb to prime the engine. Always fill the bulb before starting.

KILL SWITCH (Fig. 3)

The kill switch is used to stop the engine when operation is finished or to stop the engine in emergency situations.

OIL PRESSURE/ALTERNATOR LIGHTS (Fig. 3)

The oil pressure light indicates low oil. The red light will come on when the engine is first started, but after initial warmup it should go off. If it does not, immediately turn off the engine and check the oil level.

The alternator light indicates a low battery supply.

IDLER HANDLE (Fig. 4)

The idler handle is used to engage the idler pulley which engages the chipper drum. Always engage and disengage at a low engine RPM (750).

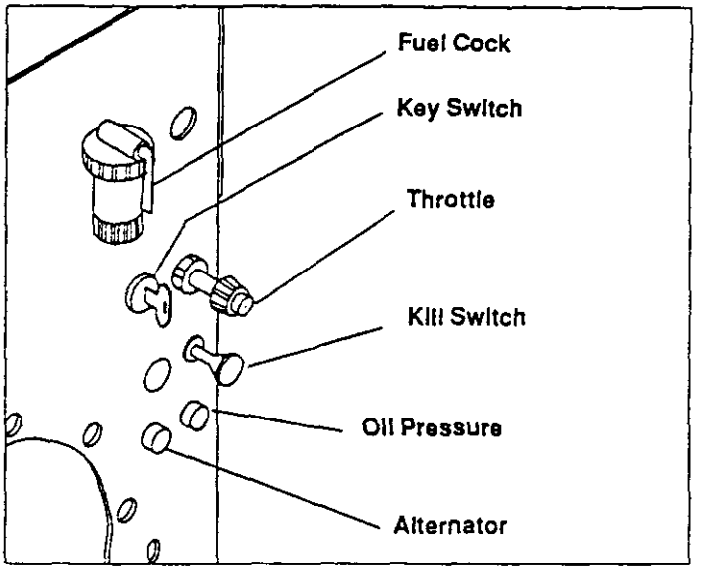

Figure 3

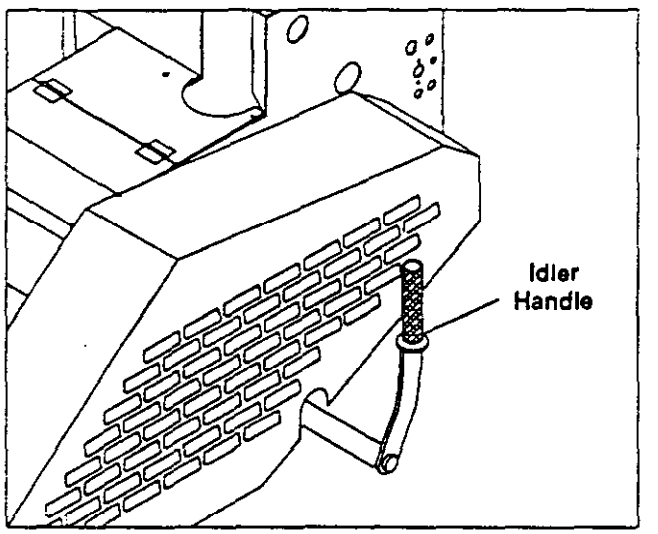

Figure 4

ROLLER ENGAGEMENT HANDLE (Fig. 5)

The roller engagement handle controls the rotation of the feed roller. When pushed forward the roller is turning in reverse position. Reverse is used in case the material becomes jammed. It is also used in emergency situations to reverse the flow into the drum.

CHUTE ROTATION HANDLE (Fig. 5)

The Chute rotation handle is used to rotate the chute 360 degrees. Always set the chute in the discharge position BEFORE starting the engine.

JACK (Fig. 5)

The jack is used to level the chipper when operating. It is also used to attach the unit to the towing vehicle.

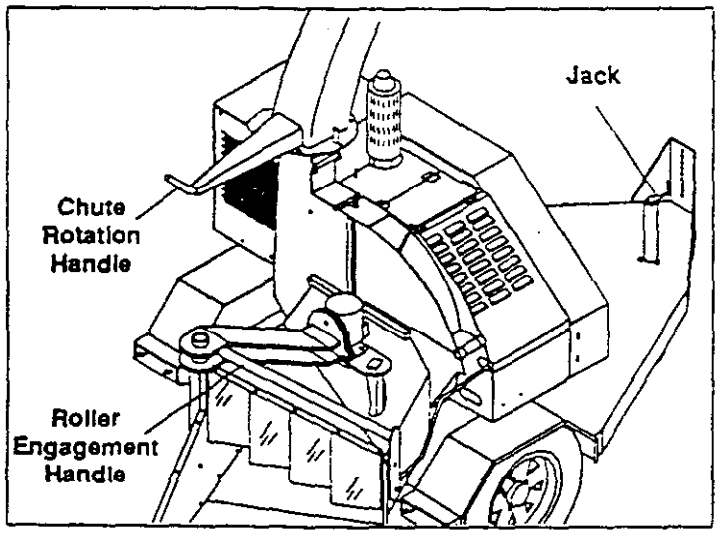

Figure 5

HEAD ROTATION LEVER (Fig. 6)

1. To rotate the chipper head, loosen the head rotation lever located on the trailer.

2. Rotate the head to the desired position.

3. Lock into position using the notches in the rotate stop and tighten the lever.

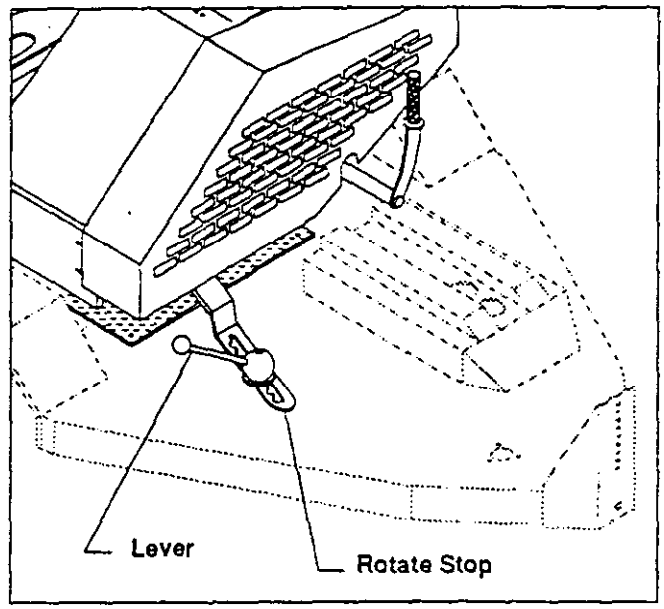

Figure 6

OPERATING INSTRUCTIONS

1. Place the unit on a level surface and block tires.

2. Set discharge chute in position away from bystanders.

3. Put feed roller in reverse or neutral position.

STARTING/STOPPING ENGINE

4. Set the fuel cock to the ON position.

5. Insert key into the starter switch and turn it to the ON position.

6. Check to see if the oil pressure lamp is on.

7. Turn the starter switch counterclockwise to PREHEAT to allow the glow lamp to redden. Shown below are the standard preheating times for various temperatures. This operation, however, is not required, when the engine is warmed up.

TEMPERATURE	PREHEATING TIME
Over 0 deg C (32 deg F)	15 sec.
Below 0 deg C (32 deg F)	30 sec

8. Turn key in key switch to START position. Release key immediately when engine starts and allow it to return to RUN position. Move throttle control to slow position.

9. Check to see that the oil pressure lamp is off. If not immediately stop the engine, and check the cause.

IMPORTANT: NEVER turn the starter switch while the engine is running.

If the engine does not start after 10 seconds, wait for another 30 seconds and then start the engine starting sequence over again.

Be sure to warm up the engine not only in winter but all seasons. An insufficiently warmed-up engine can shorten service life.

CHIPPING MATERIAL

DANGER

OBJECTS ARE DISCHARGED FROM CHUTE WITH CONSIDERABLE FORCE

- Contact with thrown objects can cause serious injury.
- **NEVER** direct discharge opening toward bystanders.
- Keep clear of discharge opening

10. With engine running and throttle at slow position, slowly engage the idler lever.

11. After engagement of idler run engine for one minute and then turn throttle to full position.

12. Push the feed roller handle to forward position to begin chipping.

IMPORTANT: Always wear safety glasses, gloves and ear protection.

13. Always feed the butt end first to eliminate dragging down of the engine.

14. If the material becomes jammed, reverse the feed roller to remove the branch.

15. Do not attempt to feed short pieces of material into the feed roller. If short pieces are left in the feed area, let the next load carry them through.

16. **NEVER** hang onto the material while it is being fed into the infeed chute. Release the material as soon as the feed roller grabs it.

17. **NEVER** allow any parts of your body get near the feed roller while it is engaged.

DANGER

TO AVOID SERIOUS INJURY FROM BLADE CONTACT AND THROWN OBJECTS:

- **NEVER** operate this machine unless drum cover and clean out door are securely fastened with locking nut and pin.
- **NEVER** open drum cover or clean out door while engine is running.
- Drum may rotate for up to 5 minutes after engine is stopped.
- **NEVER** open drum cover or clean out door while drum is rotating.

SHUT DOWN

IMPORTANT: Always idle engine down to 750 RPM before disengaging

18. When finished chipping material allow the roller to run for a few minutes to clean out any remaining material.

19. Put the roller engagement handle in the reverse position to clear out remaining material. Leave the roller engagement in the reverse position for the next start up.

20. Idle engine to 750 RPM.

21. Disengage the idler and run for a few minutes until drum rotation is minimal.

22. Push kill switch on engine panel.

23. Turn key to OFF and remove from switch.

TOWING THE CHIPPER

24. Attach the trailer ball to the ball on the towing vehicle. The ball on the chipper trailer is 2" and the towing vehicle must have the same size.

25. Raise the jack and lock into towing position.

26. Attach the safety chains to the towing vehicle. When attaching the chains ALWAYS:

A. Attach the chains in a "X" pattern to the towing vehicle.

B. Leave some slack in the chain but do not allow to drag on the ground.

C. The hook on the end of the chain must be hooked back into the chain link not to the chipper, towing vehicle or anywhere else.

27. Always use care when towing the chipper. Beware of the chipper at all times.

LUBRICATION

BEARINGS (Fig. 7)

The chipper has two self sealing bearings that must be lubricated with a No. 2 Lithium based grease.

IMPORTANT: Lubricate the bearings to maintain a slight leakage on the seals. Too much grease can cause overheating.

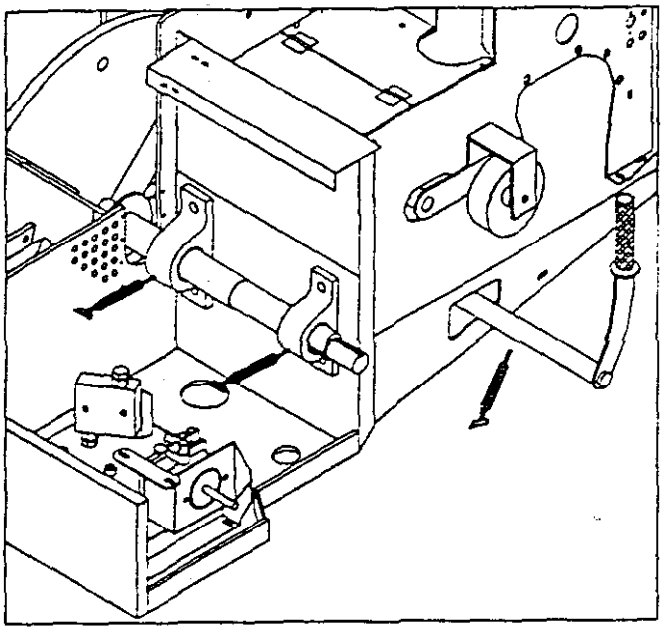

Figure 7

WHEELS AND WHEEL BEARINGS (Fig. 8)

The bearings in the axles should be repacked every 12 months or 12,000 miles. The chipper axles are E-Z lube axles. The procedure is as follows:

A. Remove the rubber plug from the end of the grease cap.

B. Attach a standard grease gun to the grease zerk located in the end of the spindle. Make sure the grease gun nozzle is fully seated on the fitting.

C. Pump grease into the zerk. The old, displaced grease will begin to flow back out of the cap and around the grease gun nozzle.

D. When the new, clean grease begins to flow out, remove the grease gun, wipe up any excess grease and replace the rubber plug in the cap.

GREASE FITTINGS (Fig. 7 & 8)

There are four grease fittings that must be lubricated with a No. 2 Lithium based grease. Grease fittings every 100 hours of operation or as needed to maintain a slight leakage at the points.

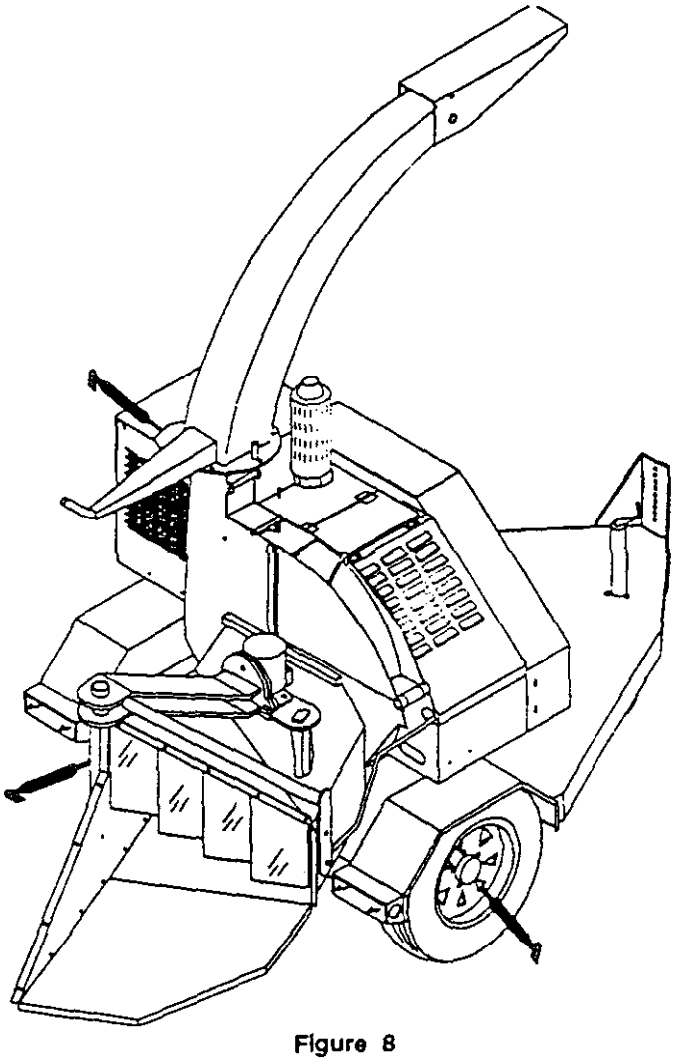

Figure 8

LUBRICATION (Continued)

CHECKING HYDRAULIC LINES AND HOSES

After every 100 operating hours, check hydraulic lines and hoses for leaks, kinked lines, loose mounting supports, wear, loose fittings, weather deterioration and chemical deterioration. Make all necessary repairs before operating.

WARNING

Keep body and hands away from pin hole leaks or nozzles that eject high pressure hydraulic fluid. Use a cardboard or paper to find hydraulic leaks. Hydraulic fluid escaping under pressure can penetrate skin and cause injury. Fluid accidentally injected into the skin must be surgically removed within a few hours by a doctor familiar with this form of injury or gangrene may result.

MAINTENANCE

IDLER BELT TENSION (Fig. 9)

The idler belt has 1/4" deflection with 5 lbs. of force and the idler lever locks over center when properly adjusted.

If the lever fails to lock over center or will not remain in the correct position, adjust with the nuts on the end of the rod until correct adjustment is achieved.

To decrease tension, rotate the adjusting nuts counterclockwise; clockwise to increase tension.

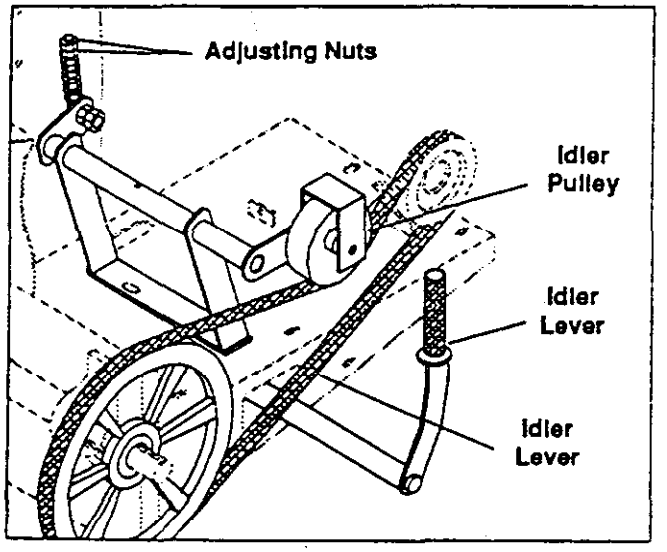

Figure 9

PUMP BELT TENSION (Fig. 10)

The tension of the pump belt is adjusted with the adjusting bolt located by the pump. Loosen the bolts attaching the pump to the frame. Turn the bolt on the push/pull tab until correct tension is achieved. 1/8" deflection with 4.5 pounds of force is recommended. Tighten the pump bolts and the adjustment bolt.

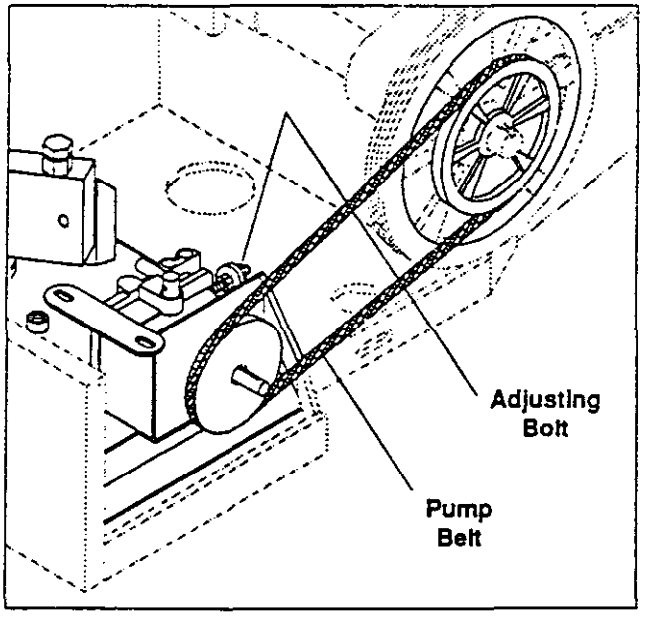

Figure 10

FEED ROLLER ADJUSTMENT (Fig. 11)

1.The adjustment of the feed roller is shown in the illustration below.

The bolt is tightened until the boss welded on the feed roller hits against the flange on the roller motor.

This bolt should be checked periodically for tightness. Access to this bolt is through the bottom of the feed table

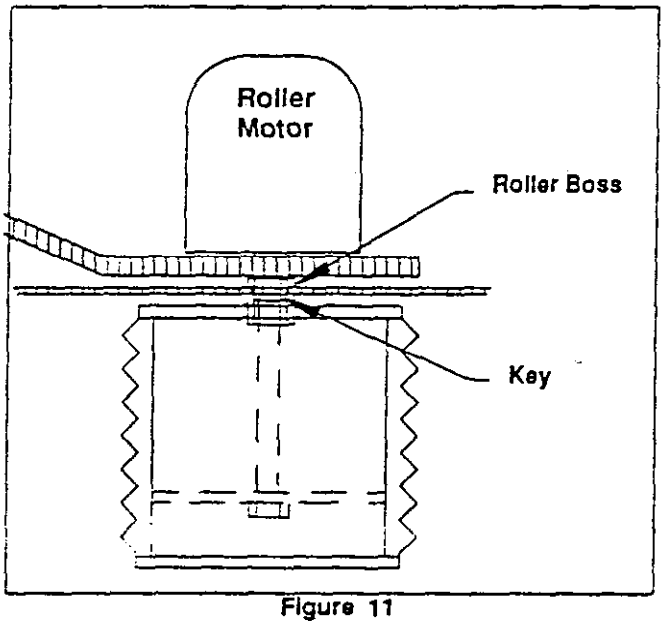

Figure 11

.FEED ROLLER SPRING TENSION (Fig. 12)

1.The tension of the feed roller is controlled with the spring rod attached to the roller arm.

2. The five springs when compressed should maintain 22-1/2" as shown below to keep the proper tension on the feed roller.

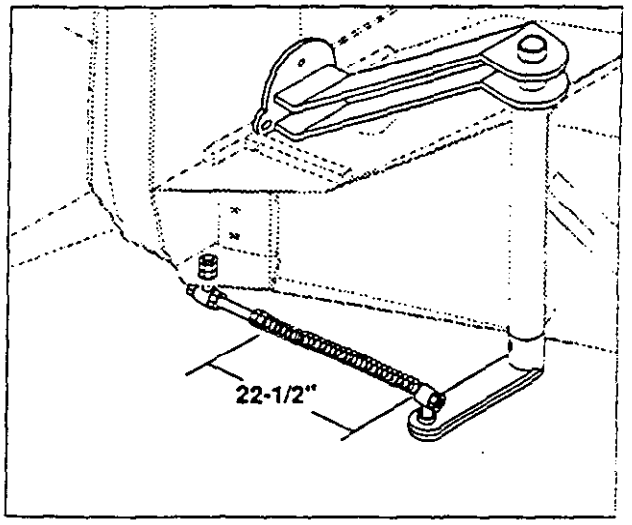

Figure 12

CUTTER BAR ADJUSTMENT (Fig. 13)

1.To adjust the cutter bar, loosen both cutter bar bolts.

2. Turn adjusting bolts until the cutter bar becomes flush with the inside lip of housing as shown. Be sure that the cutter bar is flush all the way down.

3. Tighten both cutter bar bolts and the adjusting bolts. Seethe illustration below for adjustment.

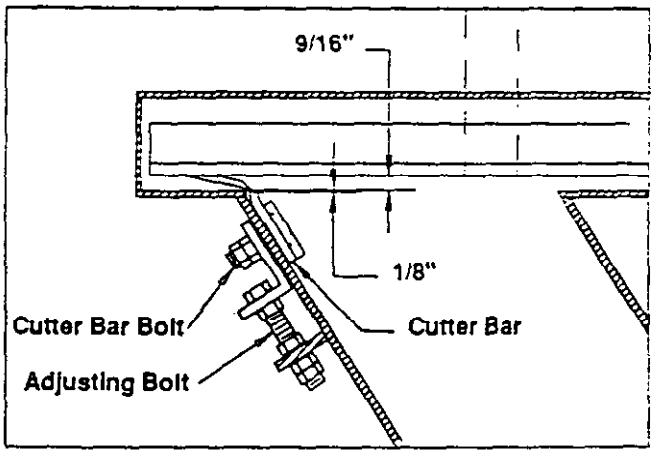

Figure 13

BLADE MAINTENANCE (Fig. 14)

The blades, when new, are 3" wide. After sharpening several times, the blade width is going to be reduced. When the width gets between 2-13/16" to 2-9/16", one galvanized spacer (98-604-3791) should be added between the blade and the drum to hold the 9/16" as shown in Fig. 13. When the width of the blade is sharpened down between 2-1/2" and 2-1/4", another spacer should be added with the first one. Once the blades are down below 2-1/4" width, they have to be replaced. The 9/16" shown in Fig. 13 should be maintained at all times. A 10 gauge spacer will already be installed between the drum and the blade when shipped from the factory. This spacer should be left in place and the galvanized spacer added to hold the 9/16" dimension. If the 1/8" becomes too great, stringy chips may be ejected or the chipper may feed improperly.

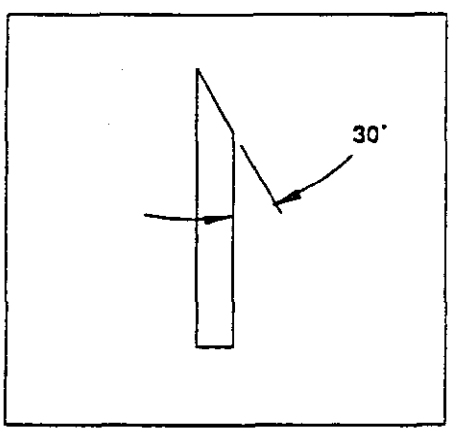

Figure 14

BLADE SHARPENING MAINTENANCE

The life of the chipper blade is determined by the time and care spent in keeping the cutting edges sharp. Its life between, regrinds and the quality of work it turns out depends largely on the care taken in resharpening. Maintenance of the chipper blades should be a high priority to add longer life and superior performance, which in turn lowers cost.

The blade is no better than its cutting edge. Dull blades are caused by:

1. Stopping the feed of the wood and allowing the blades to rub against the unfed wood.

2. Excessive resin or glue on material being cut.

3. Feed speed too slow for chipping machine speed.

4. Use of wrong cutting angles and bevels.

5. Improper care of blades.

6. Long overdue blade changes.

7. Poor grinding procedures.

When sharpening the blades there are a few procedures to follow to get the best performance out of the blades.

1. Keep the grinding wheel speed between 3500 and 4500 RPM. The depth of each cut should be no more than .002 with each pass.

2. More blades are ruined by excessive heat during grinding than any other cause. Excessive heat can be caused by excessive speed, insufficient cooling and the grinding wheel being too hard.

3. The grinding wheel should be a SA-46-G8-Vl or equivalent. Meaning: SA(abrasive-friable aluminous oxide), 46(grain size-medium), G(hardness-soft), 8(structure-open), Vl(bond-vitrified).

4. After grinding, the blades should be honed to remove the wire or feather edge left by the grinding wheel.

5. Follow the specifications listed in the manual on the degree to sharpen and the length at which the blade can no longer be used.

6. When replacing the blades with new blades, always replace every blade. When resharpening the blades should be kept as close as possible to the same length. Various lengths of blades could result in a drum that is out of balance.

HYDRAULIC SCHEMATIC

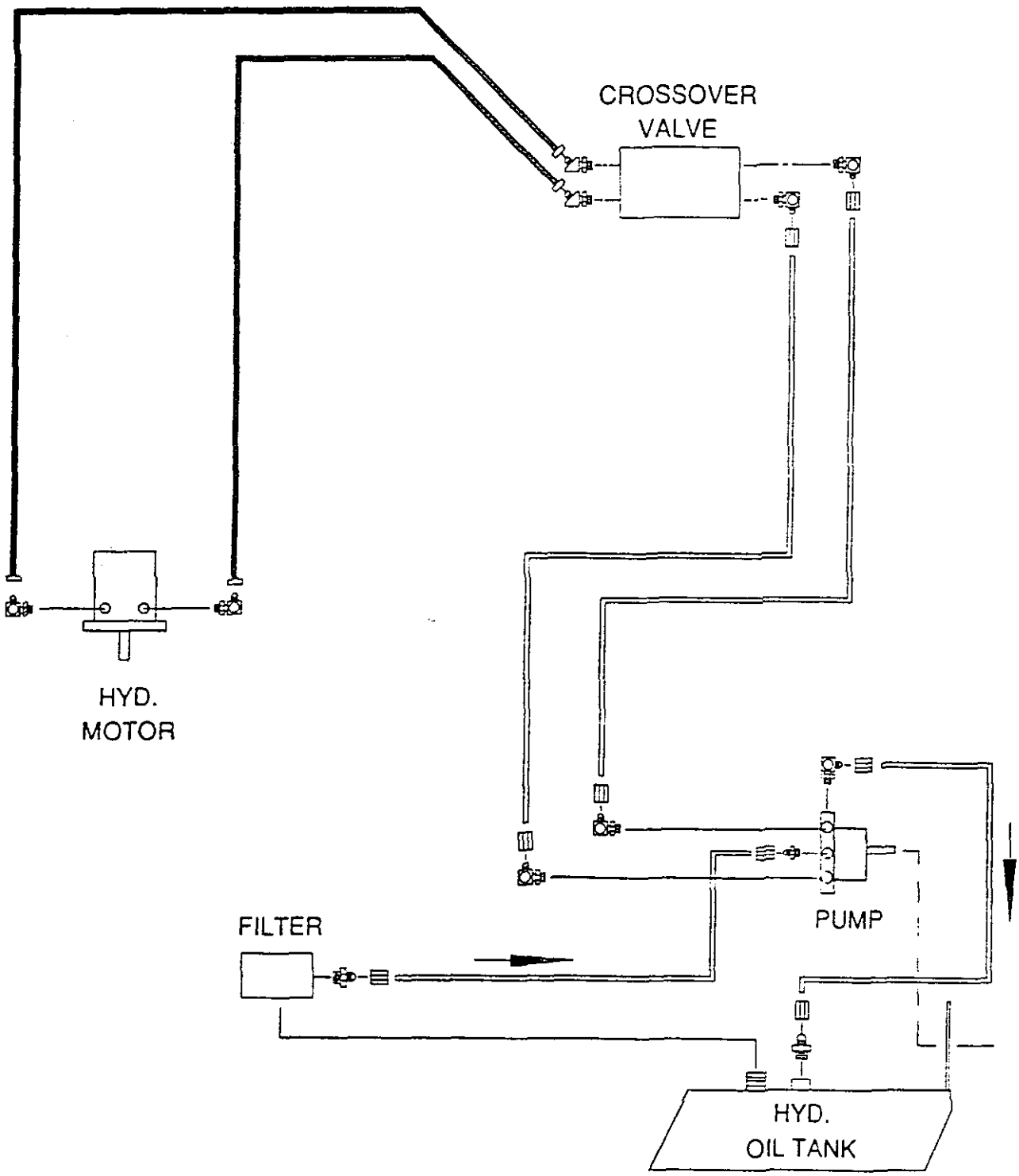

TROUBLESHOOTING

CONDITION	CAUSE	CORRECTION
DRUM SLIPPING/NOT ROTATING	• Drum belt may be broke.	• Replace belt.
	• Check to see if sheaves are turning, a key may be sheared.	• Replace key.
FEED ROLLER NOT TURNING	• Belt on pump may be broke.	• Replace belt.
	• Key may be sheared on pump sheave.	• Replace key.
	• Key may be sheared on roller boss.	• Key may be sheared. See feed roller adjustments, pg. 17.
	• Bolt connecting roller motor to roller may be broke or lose.	• Check bolt. See feed roller adjustments, pg. 17.
EXCESSIVE VIBRATION	• Check bearings on the drum shaft. If they are excessively hot they may be damaged.	• Replace bearings.
	• Drum shaft may have spun inside the bearing race. Check for bearing and shaft damage.	• Replace bearings and/or repair or replace the drum.
	• If shaft and bearings are good, the drum may be out of balance.	• Balance or replace the drum.
NOT CHIPPING PROPERLY/STRINGY MATERIAL	• Blades are dull.	• Resharpen blades. See specifications under blade maintenance, pg. 18
	• If material is stringy, blades are too far away from the cutter bar.	• See cutter bar adjustments, pg. 17.

STORAGE

1. Thoroughly clean the chipper so it is free of dirt, leaves and debris.

2. Inflate tires to 50 PSI.

3. Check all fasteners for looseness: tighten as necessary.

4. Grease or oil all grease fittings and bearings. Wipe off excess lubricant.

5. Drain and replace hydraulic fluid and filter. Inspect all hydraulic lined and fittings. Replace if necessary. Refer to the Maintenance section.

6. Check the tension and condition of the drive belts.

8. Remove the blades and sharpen them.

9. Service the battery and cables as follows:

   A. Remove the battery terminals from the battery posts.

   B. Clean the battery, terminals and posts with a wire brush and baking soda solution.

   C. Coat the cable terminals and battery posts with Grafo 112X skin over grease (Toro Part Number 505-46), or petroleum jelly to prevent corrosion.

   D. Slowly recharge the battery every 60 days for 24 hours to prevent lead sulfating of the battery.

ENGINE

1. Drain the engine oil from the oil pan and replace drain plug.

2. Remove and discard the oil filter. Install a new oil filter.

3. Refill oil pan with 1.22 gals. of SF - CC, 10W30 motor oil.

4. Start the engine and run at idle speed for approximately two minutes.

5. Stop the engine.

6. Thoroughly drain all fuel from the fuel tank, lines and the fuel pump filter.

7. Flush the fuel tank with fresh clean diesel fuel.

8. Re-secure all fuel system fittings.

IDENTIFICATION AND ORDERING

MODEL AND SERIAL NUMBER

The COMMERCIAL CHIPPER 1820D has two identification numbers: a model and serial number. The two numbers are stamped on a plate riveted to the housing under the louver cover. In any correspondence concerning the COMMERCIAL CHIPPER 1820D, supply model and serial numbers to be sure that the correct information and replacement parts are obtained.

To order replacement parts from an authorized TORO Distributor, supply the following information.

1. Model and serial numbers of the machine.

2. Part number, description and quantity of parts desired.

Note: Do not order by reference number if a parts catalog is being used; use the part number.

MAINTENANCE CHART

Date	Hours Used	Oil Change	Lubrication	Tire Pressure	Belts	Hyd. Hoses /Fittings	Storage	

MAINTENANCE CHART

Date	Hours Used	Oil Change	Lubrication	Tire Pressure	Belts	Hyd. Hoses /Fittings	Storage	

The Toro Promise

A ONE YEAR LIMITED WARRANTY

The Toro Company promises to repair your TORO Product if defective in materials or workmanship. The following time periods from the date of purchase apply:

Commercial Products ..... 1 Year

The costs of parts and labor are included, but the customer pays the transportation costs on walk rotary mowers with cutting widths of less than 25".

If you feel your TORO product is defective and wish to rely on The Toro Promise, the following procedure is recommended:

1. Contact your Authorized TORO Distributor or Commercial Dealer (the Yellow Pages of your telephone directory is a good reference source).
2. The TORO Distributor or Commercial Dealer will advise you on the arrangements that can be made to inspect and repair your product.
3. The TORO Distributor or Commercial Dealer will inspect the product and advise you whether the product is defective and,if so, make all repairs necessary to correct the defect without an extra charge to you.

If for any reason you are dissatisfied with the distributor's analysis of the defect or the service performed, you may contact us.

Write:

TORO Commercial Products Service Department
100 Industrial Parkway
Industrial Airport, Ks. 66031

The above remedy of the product defects through repair by an Authorized TORO Distributor or Commercial Dealer is the purchaser's sole remedy for any defect.

THERE IS NO OTHER EXPRESS WARRANTY. ALL IMPLIED WARRANTIES OF MERCHANTABILITY AND FITNESS FOR USE ARE LIMITED TO THE DURATION OF THE EXPRESS WARRANTY.

Some states do not allow limitations on how long an implied warranty lasts, so the above limitation may not apply to you.

This Warranty applies only to parts or components which are defective and does not cover repairs necessary due to normal wear, misuse, accidents, or lack of proper maintenance. Regular, routine maintenance of the unit to keep it in proper condition is the responsibility of the owner.

All warranty repairs reimbursable under the Toro Promise must be performed by an Authorized TORO Commercial Dealer or Distributor using Toro approved replacement parts.

Repairs or attempted repairs by anyone other than an Authorized TORO Distributor or Commercial Dealer are not reimbursable under the Toro Promise. In addition, these unauthorized repair attempts may result in additional malfunctions, the correction of which is not covered by warranty.

THE TORO COMPANY IS NOT LIABLE FOR INDIRECT, INCIDENTAL OR CONSEQUENTIAL DAMAGES IN CONNECTION WITH THE USE OF THE PRODUCT INCLUDING ANY COST OR EXPENSE OF PROVIDING SUBSTITUTE EQUIPMENT OR SERVICE DURING PERIODS OF MALFUNCTION OR NON-USE.

Some states do not allow the exclusion or limitation of incidental or consequential damages, so the above limitation or exclusion may not apply to you.

This warranty gives you specific legal rights, and you may also have other rights which vary from state to state.

COUNTRIES OTHER THAN THE UNITED STATES OR CANADA

Customers who have purchased TORO products exported from the United States or Canada should contact their TORO Distributor (Dealer) to obtain guarantee policies for your country, province or state. If for any reason you are dissatisfied with your Distributor's service or have difficulty obtaining guarantee information, contact the TORO importer. If all other remedies fail, you may contact us at The Toro Company.