FORM NO. 95-4836

TORO®

MODEL NO. 44501 - 70001 & UP

OPERATOR'S MANUAL

TOPDRESSER 2300

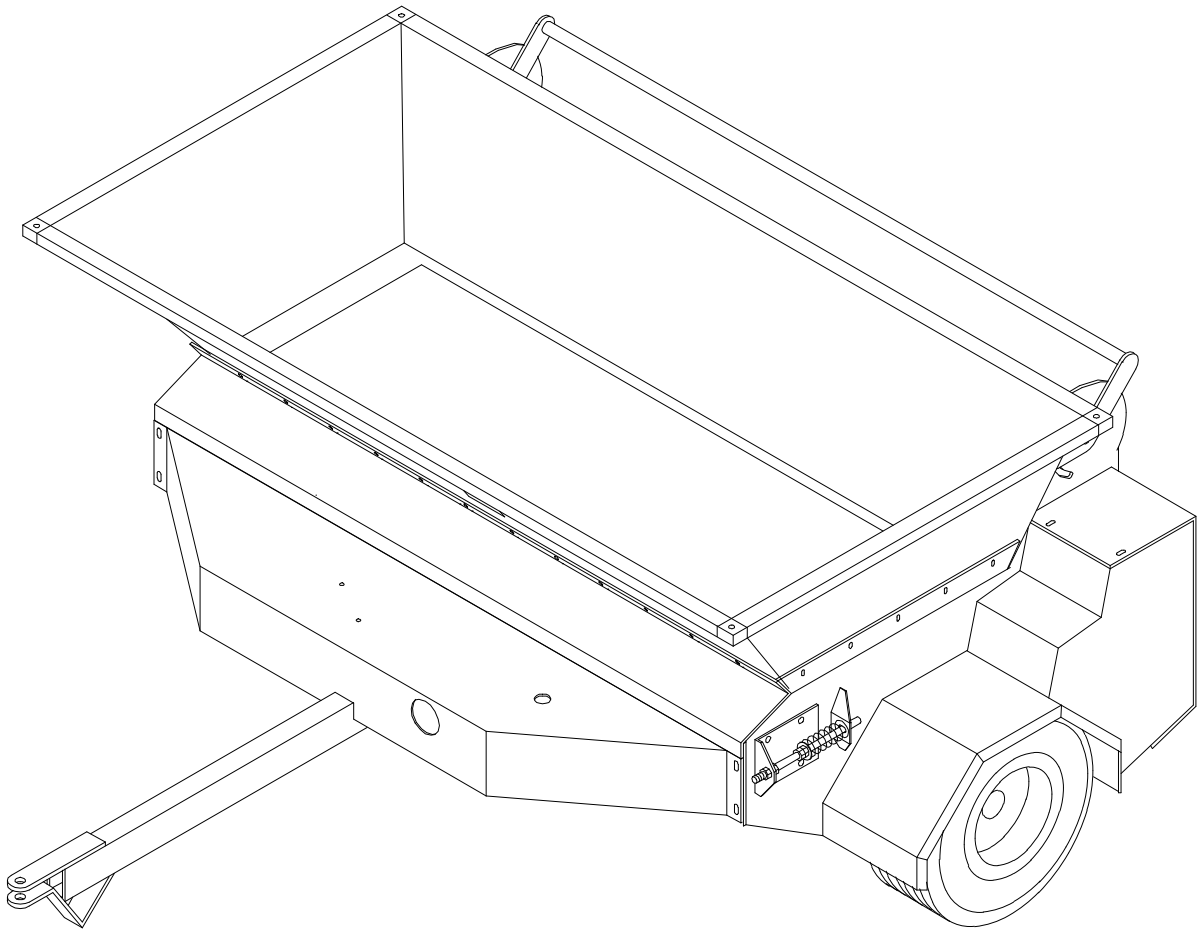

© The TORO Company - 1997
All Rights Reserved

FOREWORD

Thank you for buying a high quality Toro turf care product. To get the best performance from this machine, operate and maintain it according to the instructions in this manual.

Toro also wants to stress the importance of safety. You and anyone else using or maintaining this machine are strongly urged to read this manual, especially all the safety instructions.

DANGER, WARNING and CAUTION, used with the triangular safety alert symbol, highlight safety messages. Always read and understand these messages because they relate to personal injury and your safety.

If you ever need help or have questions about your new Toro turf care product, contact your local Authorized Toro Distributor. The Toro Distributor has a complete supply of replacement parts, a full line of accessories and a professional service staff to support you. Keep your Toro all Toro. Buy genuine Toro parts and accessories.

TABLE OF CONTENTS

	Page
SAFETY INSTRUCTIONS	3 - 4
SAFETY AND INSTRUCTION DECALS	4
LOOSE PARTS	5
SPECIFICATIONS	6
SET UP INSTRUCTIONS	
Install Tongue	7
Assemble Hopper	7
BEFORE OPERATING	
Check Hydraulic System	8
Check Tire Pressure	8
Attach Topdresser To Towing Vehicle	8
CONTROLS	8 - 9
OPERATING INSTRUCTIONS	9
LUBRICATION	10

	Page
MAINTENANCE	
Bleeding Hydraulics	11
Changing Oil Filter	11
Oil Tank	11
Wheel Motor Nut Torque	11
Brush To Conveyor Belt Adjustment	12
Chain Tension	12
Rotation	12
Conveyor Belt Installation/Tension	13
ELECTRIC SCHEMATIC	14
HYDRAULIC SCHEMATIC	15
TROUBLE SHOOTING	16 - 17
STORAGE	18
IDENTIFICATION AND ORDERING	18
MAINTENANCE CHART	19
WARRANTY	Back Cover

SAFETY INSTRUCTIONS

The safety alert symbol means CAUTION, WARNING or DANGER - "personal safety instruction". Read and understand the instruction because it has to do with safety. Failure to comply with the instruction may result in personal injury.

BEFORE OPERATING

1. Read and understand all operating and safety instructions. Before operating this unit, become familiar with all controls and know how to stop quickly. A replacement manual is available by sending complete Model and Serial Number to:

The Toro Company
8111 Lyndale Avenue South
Minneapolis, MN 55420

2. Before each use, be sure all bolts and nuts are tight.

3. Do not modify this equipment in any manner.

4. When guards are removed for service, replace them before operating machine. Guards are for your protection.

WHILE OPERATING

5. **NEVER** open the hydraulic oil cap until ALL air pressure has been released.

6. The weight of the topdresser when filled with sand is approximately 3500 lbs. The towing vehicle should have adequate brakes to handle this weight. Check the specifications in the towing vehicle's operator manual pertaining to towing weight.

7. **NEVER** carry passengers on the machine, and keep everyone away from the areas of operation.

8. **NEVER** allow children to operate the machine. Do not allow adults to operate the machine without proper instructions.

9. Make sure all hydraulic fittings are tight and all hydraulic hoses are in good condition before operating this unit.

10. Keep hands and feet out of hopper when unit is operating or engine is running on towing vehicle.

11. To avoid loss of control, **NEVER**, tow the unit faster than 12MPH.

SAFETY INSTRUCTIONS

MAINTENANCE

12. **NEVER** open the hydraulic cap until ALL air pressure has been released.

13. Keep body and hands away from pin hole leaks or nozzles that eject hydraulic fluid under pressure. Use paper or cardboard, not hands to search for leaks.

Hydraulic fluid escaping under pressure can have sufficient force to penetrate skin and do serious damage. If fluid is injected into skin it must be surgically removed within a few hours by a doctor familiar with this form of injury or gangrene may result.

14. **ALWAYS** torque the nut on the wheel motors to 230 - 250 ft. lbs when servicing.

SAFETY AND INSTRUCTION DECALS

The following safety and instruction decals are installed on the unit. Replace any decals that becomes damaged or illegible. Part numbers for decals are listed below and in your Parts Catalog. Order replacements from your Authorized Toro Distributor.

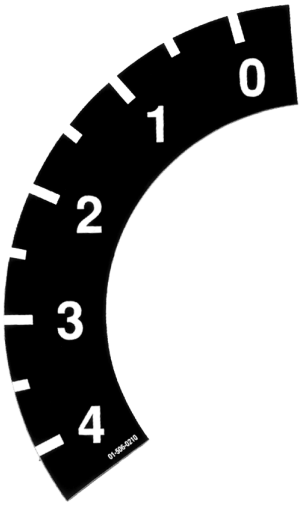

LINED UP WITH GATE CONTROL POINTER (Part No. 01-506-0210)



NEAR BEARINGS & GATE CONTROL ARM (Part No. 58-6520)



ON CHAIN GUARD (Part No. 01-506-0050)

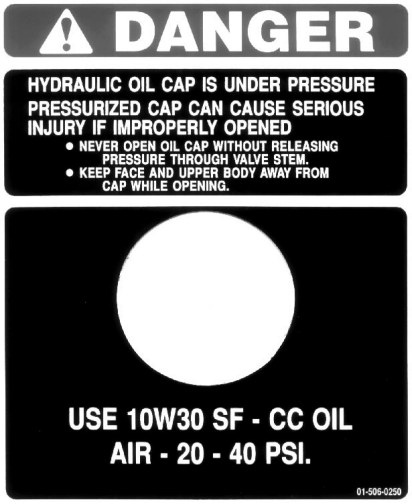

OVER OIL CAP (Part No. 01-506-0250)



ON FENDERS & HYD. TANK (Part No. 75-5190)



EACH SIDE OF HOPPER (Part No. 01-506-0240)

LOOSE PARTS

Description	Qty	Use
Tongue	1	Install tongue
Capscrew, 1/2"-13 x 3-1/2"	2	
Flat Washer, 1/2"	4	
Hex Nut, 1/2"	4	
Hopper Front	1	Assemble hopper
Long Skirt	1	
Carriage Bolt, 1/4"-20 x 1"	20	
Flat Washer, 1/4"	40	
Lock Washer, 1/4"	40	
Hex Nut, 1/4"	40	
Short Skirt	2	
Hopper Side, LH	1	
Hopper Back	1	
Hopper Brace	1	
Carriage Bolt, 1/4"-20 x 3/4"	20	
Hopper Side, RH	1	
Support Rod	2	
Hex Nut, 3/8"	4	
Flat Washer, 3/8"	2	
Wiring Harness	1	

SPECIFICATIONS

Dimensions:

Height: 40"
Length: 88"
Width: 83"

Hopper Dimensions:

Height: 18-1/4"
Top Width: 76"
Bottom Width: 60"
Top Length: 40"
Bottom Length: 20"

Hopper Capacity: 23.5 cubic foot

Spreading Width: 60"

Top Dressing Speed: Up to 8 MPH

Transporting Speed: Up to 12 MPH

Conveyor Belt: Continuous 60" wide composition belt with heavy duty polyester cord.

Metering Gate: Infinitely variable from closed to 4-1/2" opening for light to heavy applications.

Controls: 12 volt on/off switch at operator's position to engage conveyor and brush. Metering gate control arm spans full width in front of brush.

Drive: Ground driven hydraulic system self-contained to topdresser (no hoses to connect to towing vehicle).

Wheels and tires:
(4) 16 x 6.50 x 8 and
(2) 18 x 8.50 x 8 - 4 ply rib tread, high flotation tires

Hydraulic Oil: 10W30 SF - CC (2 gallons)

Air pressure:
Tires: 20 PSI
Hydraulic tank: 20-40 PSI

Shipping Weight: 1000 lbs.

SET UP INSTRUCTIONS

INSTALL TONGUE (Fig. 1)

1. Mount the tongue using (2) 1/2" x 3-1/2" bolts, flat washers and nuts provided. Double nut both bolts.

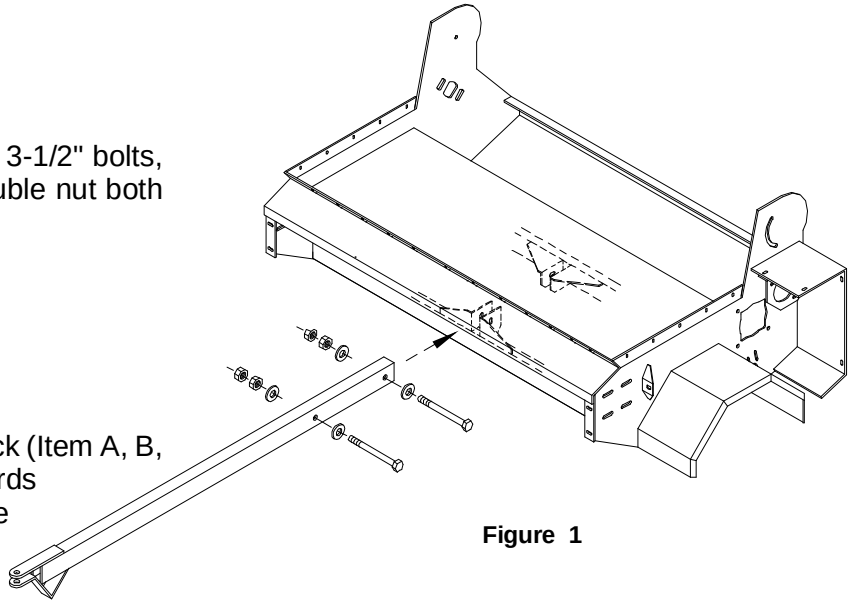

Figure 1

ASSEMBLE HOPPER (Fig. 2)

1. Assemble the sides, front, and back (Item A, B, and C) of the hopper and corner guards (Item H) using the 1/4" x 3/4" carriage bolts provided. Attach at all four corners and secure tightly.

2. Set the hopper frame in position on the topdresser.

3. Attach the rear rubber skirt (D) between the frame and the hopper. Use the 1/4" x 1" carriage bolts to mount.

4. Attach the side rubber skirts (E) between the frame and the hopper. Make sure rubber seals together on sides, then tighten bolts.

IMPORTANT: The rubber flaps must be installed on the topdresser. If the flaps are not installed, damage will occur to the conveyor belt and rollers.

5. Install support rods (F) through the front side. Install the hopper brace (G) on the rear of the hopper. Run the threaded end of the support rod through the brace and the hopper. Attach with a 3/8" flat washer and double nut.

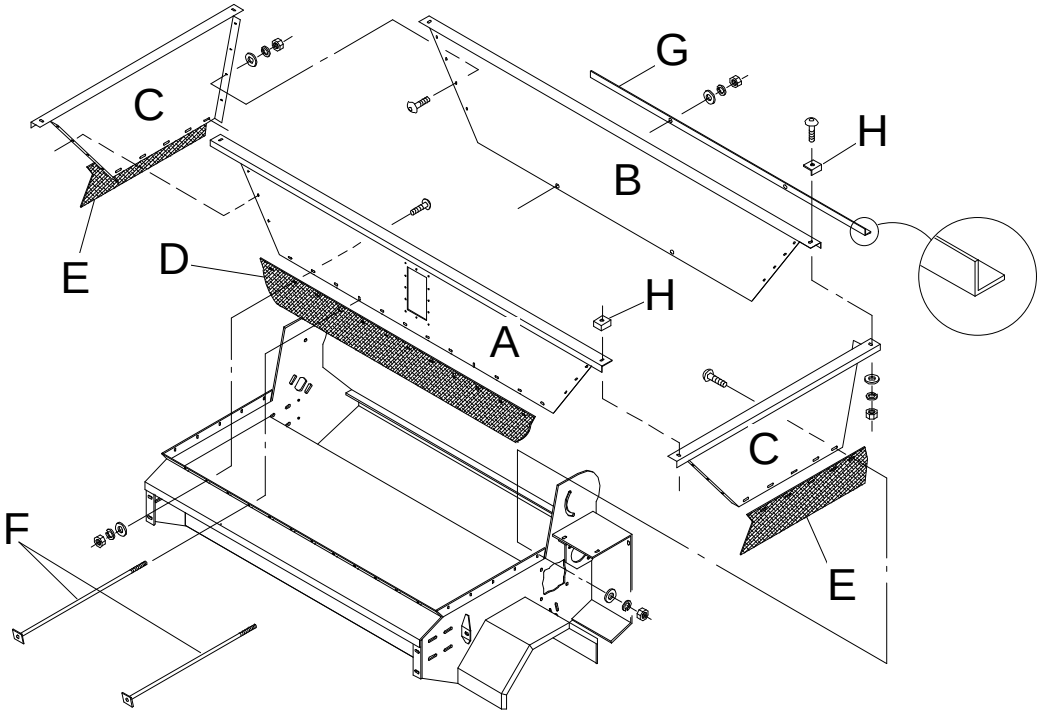

Figure 2

BEFORE OPERATING

DANGER

Pressurized Cap Can Cause Serious Injury If Improperly Opened.

Never open oil cap without releasing pressure valve stem.

Keep face and upper body away from cap while opening.

CHECK HYDRAULIC SYSTEM

1. The hydraulic system is designed to operate on 10W30 SF-CC oil. The tank contains 2 gallons of oil. There should be 4" of oil in the tank when full.

2. Pressurize the hydraulic tank with air (20 to 40 PSI). Always maintain air pressure in the tank to minimize slipping of the conveyor belt when using heavy or wet sand.

3. Visually inspect the hydraulic system for leaks, loose fasteners, missing parts, improperly routed lines. Make all repairs before operating.

CHECK TIRE PRESSURE

1. Check tire pressure before each use. Because the topdresser is ground driven always maintain tire pressure at 20 PSI.

ATTACH TOPDRESSER TO TOWING VEHICLE

1. Attach the topdresser to the towing vehicle. Use the pin on the towing vehicle to secure.

2. Connect the long half of the wiring harness to short half at the end of the tongue.

3. Connect the red wire to the positive terminal on the towing vehicle battery. The white wire connects to the negative terminal.

4. Gather and consolidate all loose wires. Tape together with existing wires on the towing vehicle. Make sure there are no loose or dangling wires to interfere with the operation of the unit.

5. Pull the unit forward at a slow speed and flip the electrical switch to the "ON" position. If brush and conveyor belt rotate flip switch off. If they do not rotate, check the trouble shooting page (pg. 16) for details. After checking, turn the switch off.

CONTROLS

ELECTRIC SWITCH

The electric switch has 2 positions; ON, OFF. When switch is on the conveyor belt and brush will rotate. When switch is off the conveyor belt and brush stop rotating.

GATE CONTROL ARM (Fig. 3)

The gate control arm is used to control the amount of sand being applied to the turf. The black knob on the end is used to lock the setting into position.

1. Loosen the black knob enough to allow the arm to pivot.

2. Set the gate into position. Moving the gate control arm downward opens the gate and upward motion closes it.

3. When desired gate setting is obtained, tighten black knob to lock into position.

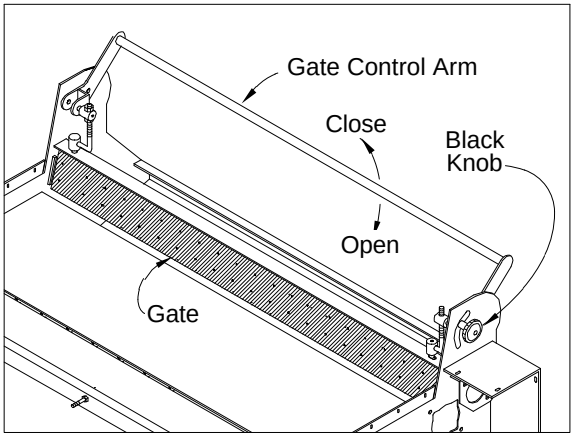

Figure 3

CONTROLS

DANGER

Pressurized Cap Can Cause Serious Injury If Improperly Opened.

NEVER open oil cap without releasing pressure valve stem.

Keep face and upper body away from cap while opening.

PRESSURE GAUGE

The gauge is a pressure gauge that reads the air pressure in the tank. The recommended air pressure is between 20 - 40 PSI.

OPERATING INSTRUCTIONS

DANGER

NEVER carry passengers on the machine or towing vehicle, and keep everyone away from the areas of operation.

To avoid loss of control, **NEVER**, tow the unit faster than 12 MPH.

Keep hands and feet out of hopper when unit is operating or engine is running on towing vehicle.

1. Fill the hopper with sand. The maximum amount of sand that can be put into the hopper is 2500 pounds. The weight of the topdresser filled with sand is approximately 3500 pounds. The towing vehicle should have adequate brakes to handle this weight. Check the specifications in the towing vehicle's operator manual pertaining to towing weight.

IMPORTANT: NEVER transport at a speed faster 12 MPH because the hydraulic motors will be damaged.

NEVER top dress at a speed faster than 8 MPH.

2. Open the gate arm to the desired rate. Tighten the black knob to lock into position.

3. Slowly pull the topdresser forward and flip the electrical switch to the "ON" position. The unit is now topdressing.

4. Flip electric switch to OFF to stop topdressing and before transporting.

SAND APPLICATION RATE

The rate of sand being applied depends on the weight of the sand. Sand varies in moisture and coarseness which effects the weight. These factors must be taken into consideration when determining the amount of sand required for the application. Test a small area to determine the correct amount.

IMPORTANT: The maximum amount of sand that can be put into the hopper is 2500 pounds.

LUBRICATION

BEARINGS (Fig. 4)

The topdresser has 5 self sealing bearings that must be lubricated with a No. 2 Lithium based grease.

IMPORTANT: Lubricate the bearings to maintain a slight leakage on the seals. Too much grease can cause overheating.

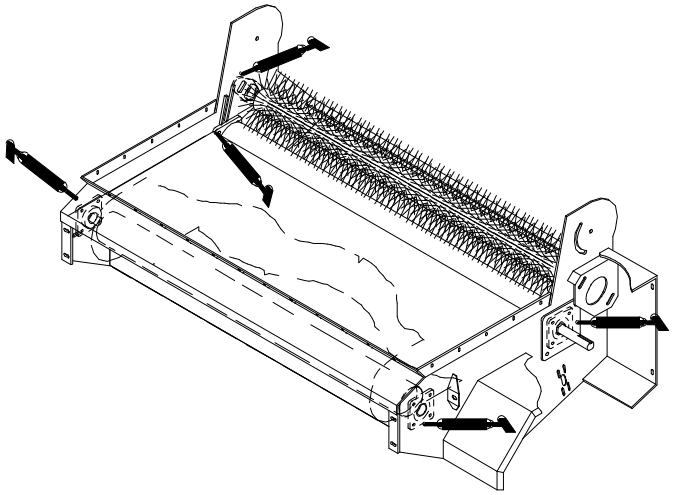

Figure 4

ADJUSTMENT LUGS (Fig. 5)

Always maintain a light coat of No. 2 Lithium based grease on the threads of the four adjustment lugs.

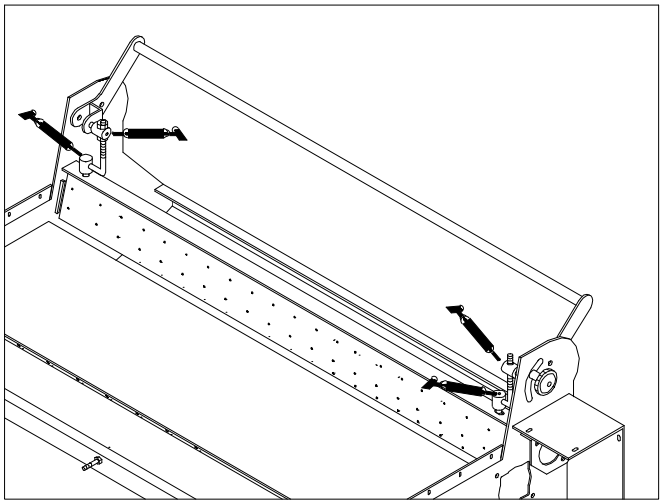

Figure 5

Wheels

Grease fittings weekly or every 40 operating hours. Use No. 2 Lithium based grease.

DRIVE CHAIN

Always maintain a light coat of grease on the drive chain.

MAINTENANCE

BLEEDING HYDRAULIC SYSTEM

DANGER

Pressurized Cap Can Cause Serious Injury If Improperly Opened.

Never open oil cap without releasing pressure valve stem.

Keep face and upper body away from cap while opening.

When any hydraulic part is replaced the system will have to be bled.

1. Push valve stem in to release all pressure from the tank.

2. Remove the air pressure cap.

3. With towing unit, pull the topdresser up to 8 MPH. Pull the top dresser until all "jerking" motion has stopped.

4. Use a tape measure to check the level of oil in the tank.

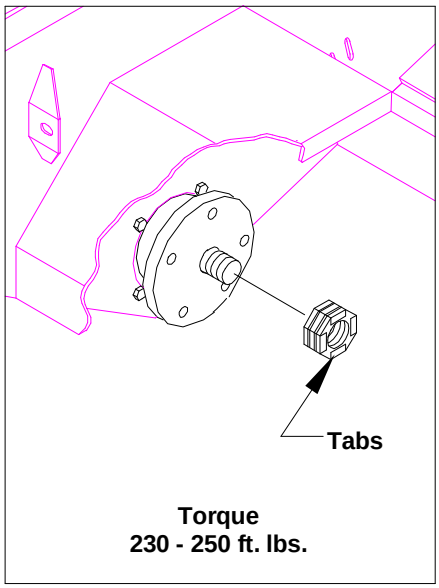

Figure 6

5. Check the conveyor and brush motors, both must run smoothly with no jerking motion.

6. When all are operating smoothly, install the air pressure cap. Check the air pressure cap for leaks. See Check Hydraulic System under Before Operating (pg. 8).

IMPORTANT: When working with hydraulics, you must keep the work area as clean as possible. Change oil and filter as recommended. If you have a new piece of equipment under warranty and a hydraulic item goes out . . . . don't try to fix it. Install a new part and return the defective part to the factory. It is easier to get warranty on a part that has not been taken apart.

CHANGING OIL FILTER

The oil filter is a 10 micron cross filter. Change the filter every 100 hours of operation. Always fill the element with oil when installing a new filter.

OIL TANK

The oil tank is a 2 gallon capacity tank. The oil type is 10W30 or 10W40 SF - CC (preferably 10W30). Change oil every 500 hours or yearly, whichever comes first. The drain plug is located on the bottom of the tank.

IMPORTANT: When adding oil to the system pour it through a funnel with a fine mesh screen (200 mesh or better). Keep the funnel and containers immaculately clean. This procedure prevents accidental contamination of the hydraulic system.

WHEEL MOTOR NUT TORQUE (Fig. 6)

ALWAYS torque the nut on the wheel motor to 230 - 250 ft. lbs when servicing. Place the tabs of the nut on the outside as shown in Fig. 6. If the tabs are installed on the inside, against the hub, the nut cannot be torqued properly.

MAINTENANCE

BRUSH TO CONVEYOR BELT ADJUSTMENT Fig. 7)

The brush is moved back and forth on its mounting slots to adjust it to the conveyor belt. The brush should be as close to the belt as possible without touching. A piece of paper can be inserted between the conveyor belt and the brush to check

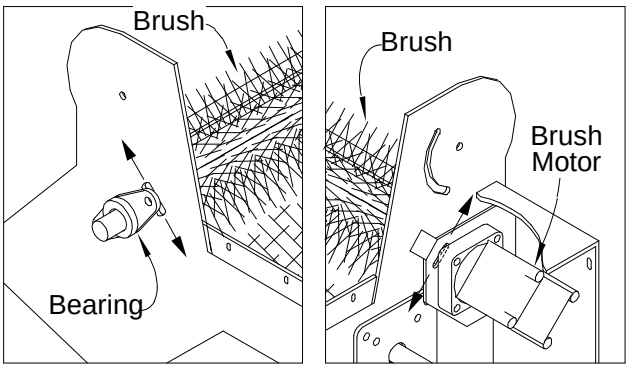

Figure 7

the adjustment. The brush must be the same height from end to end.

1. Loosen the nuts of the bearing on the right hand side.

2. Loosen the nuts mounting the brush motor to the main frame.

3. Slide the brush into position on the right hand side. Finger tighten the nuts.

4. Slide the brush into position on the left hand side. Finger tighten the nuts.

5. Insert a piece of paper between the brush and the conveyor belt. The brush must be the same height from end to end.

6. If the adjustment is correct, tighten the nuts. If not, repeat steps 1 through 5.

CHAIN TENSION (Fig. 8)

The chain tension is adjusted by moving the motor

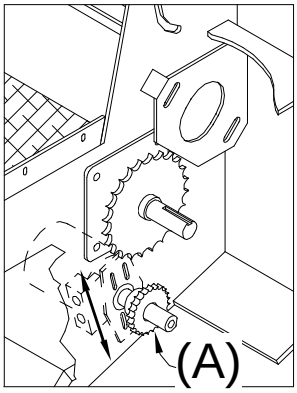

Figure 8

and sprocket assembly (A) up and down on its mounting slots. A 1/8" deflection is recommended. Do not over tighten, this will cause chain wear. Do not operate with a loose chain; this will cause sprocket wear.

1. Loosen the nuts mounting the motor and sprocket assembly (A) to the main frame.

2. Slide the hydraulic motor and sprocket assembly (A) up and down on the mounting slot until proper tension is achieved.

3. Tighten the nuts.

ROTATION (Fig. 9)

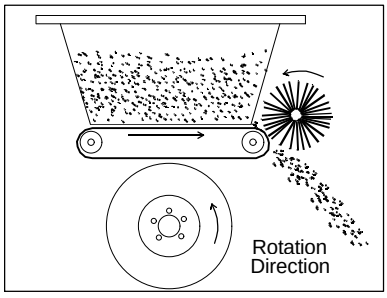

Figure 9

The rotation of the conveyor, brush and the wheels

is shown in Fig. 9. If the rotation in not correct, the hydraulic lines are installed backwards. See the Hydraulic Schematic (pg. 15).

MAINTENANCE

CONVEYOR BELT INSTALLATION/TENSION (Fig. 10 & 11)

To install a new conveyor belt follow the instructions below.

1. Pull the topdresser forward until the conveyor belt seam is in the center of the hopper.

2. Loosen the nuts (A) on the spring rod to release the tension.(See Figure 11).

3. Remove the lacing (seam wire) from the old conveyor belt.

4. Grab one side of the old conveyor belt and pull it free from the unit.

5. Lay the new belt on the frame and roll it around the rollers bringing the seam to the center.

6. Feed the lacing through the conveyor belt seam. Make sure the lacing is lined up. If the lacing is off one notch it will cause the belt to buckle and not run straight. Check for straightness with a straight edge once it has been installed. See Fig. 10. After the wire is centered, bend both ends of

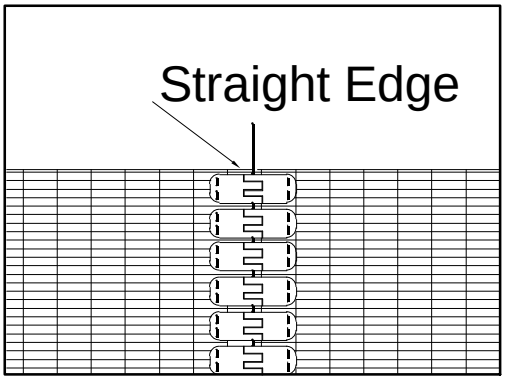

the wire to prevent the wire from working loose.

Figure 10

CONVEYOR BELT LACING

The lacing on the conveyor belt has a silicone sealer on it to prevent sand leakage inside the conveyor belt. Reapply once a year and everytime the lacing is removed for service. The silicone may be purchased locally. It is multi-purpose, weather resistant and should be flexible or flowable.

1. Tighten the nut on the spring rod until the spring is compressed to 4-1/2" as shown in Fig. 11. Be sure the front roller is parallel with the drive roller. This can be done by measuring the distance between the drive roller bearing bolt and the idler roller bearing bolt on each side. If there is a difference tighten the nut on the spring rod until

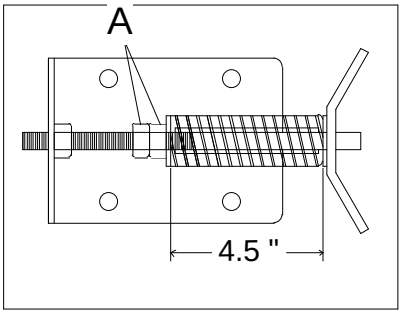

distance on both sides is equal.

Figure 11

2. Tighten the jam nut against the other jam nut. The plate must be free to slide. Tighten the bolts, then loosen until it can slide.

IMPORTANT: Do not allow the plate to become too loose, it will cause the spring rod to bend.

ELECTRICAL SCHEMATIC

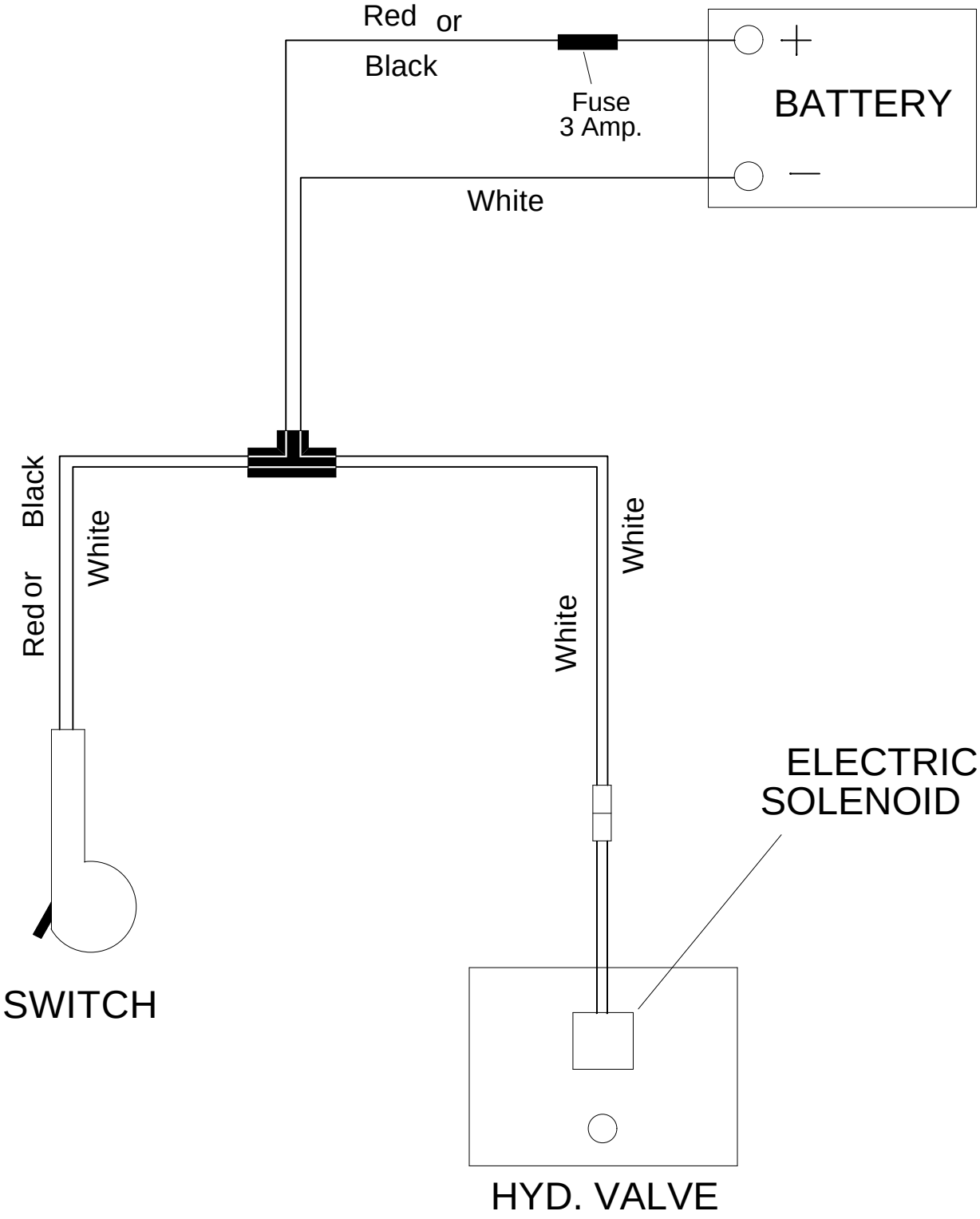

HYDRAULIC SCHEMATIC

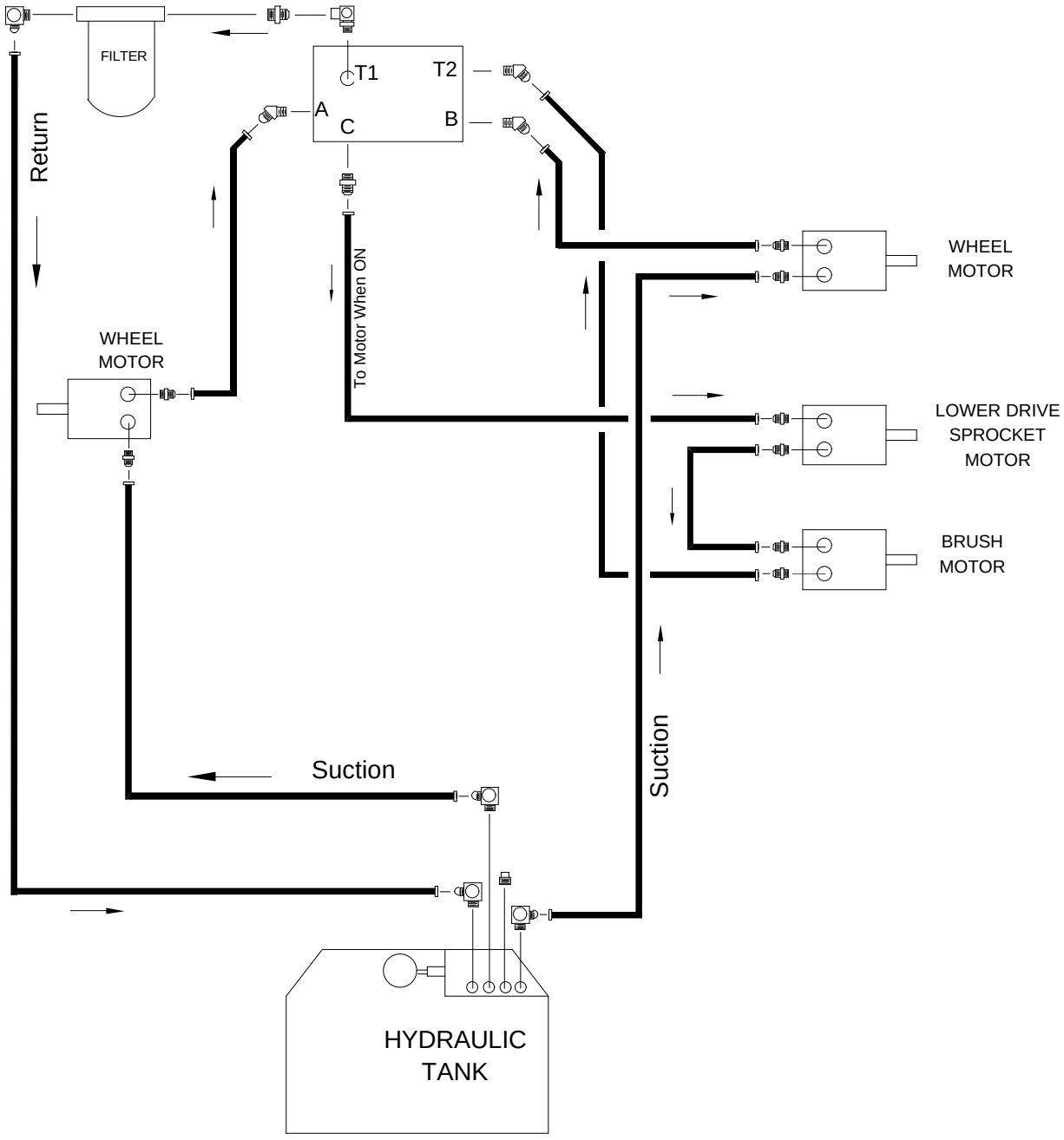

TROUBLE SHOOTING

CONDITION	CAUSE	CORRECTION
Conveyor Belt and Brush Not Turning	• Bad Electrical Connections	• Plug in the wiring harness and make sure wires are making contact.
	• Blown harness fuse.	• Replace fuse
	• Hydraulic lines installed backwards	• Standing on the left hand side (Chain Guard side) the conveyor belt should rotate clockwise and the brush should rotate counterclockwise. If incorrect, reverse the lines on the corresponding motors.
	• Contaminated valve	• Remove cartridge to see if blocked. Clean out, making sure plunger is not damaged. Replace valve or cartridge.
Conveyor Belt Not Turning	• Loose or broken chain	• Replace chain or adjust tension.
	• Tension of the belt is too loose.	• Tighten the tension.
	• Brush set too low to the belt.	• Slide a sheet of paper between the brush and the belt; it should slide freely. If brush is too low slide it upwards until it clears the belt just enough to slide the paper underneath. Make sure the paper clears at the lacing.
	• Drive roller not turning	• Check the welds on each end of the drive roller. The shaft may be turning but not the roller. Replace drive roller.
Tire(s) Skidding		• Check sprocket for sheared key. Replace key.
	• One tire skids	• Replace the check valve on that side.
	• Both tires skid	• Check the valve for blockage of ports.

TROUBLE SHOOTING (Cont.)

CONDITION	CAUSE	CORRECTION
Tire(s) Skidding (cont.)		• Check the pressure setting on the relief valve (1100 PSI) it may be too low. Reset, if necessary.
Conveyor Belt Not Tracking Properly	• Uneven tire pressure	• Check tire pressure. All tires should be 20 PSI.
	• Belt pulls to one side	• Tension is not the same from side to side. Set the spring rod at 4 1/2" on both sides. Run. The belt will pull to the tight side. Loosen or tighten as needed.
	• Belt Buckles in Center	• Pulleys are not in line. Remove belt lacing and realign the pulleys using straight edge or fixture.
	• Belt rides off pulley	• V-Guides of the belt not correct. Measure distance between v-guides for straightness and squarness. Tolerance for both is (+) or (-) 1/16".
Uneven Sand Distribution	• Uneven tire pressure	• Check both outside tire pressure; both tires should be 20 PSI.
	• Uneven brush setting	• Check brush to conveyor belt adjustment. Brush should be same height all the way across face.
	• Excessive air in the system	• Bleed lines. See Operators Manual for instructions.
	• Not enough air in oil tank	• Pressurize air in tank to 35 PSI.

SEASONAL STORAGE

1. Thoroughly clean the topdresser, especially inside the hopper. The hopper and conveyor belt area should be free of any remaining sand particles.

2. Apply a light coat of silicone to the lacing of the conveyor belt. Refer to Maintenance section

3. Inflate all tires to 20 PSI. Or block up the topdresser to remove the weight.

4. Drain and replace hydraulic fluid and filter. Inspect all hydraulic lines and fittings. Replace if necessary. Refer to the Maintenance section.

5. Tighten all fasteners.

6. Lubricate all grease fittings and bearings. Wipe off excess lubricant. Refer to page 10.

7. The unit should be stored out of the sun to prolong the life of the conveyor belt. If stored outside it is recommended to cover the hopper with a tarp.

8. Check the tension of the drive chain. Adjust the tension if necessary and lightly coat the chain with grease. Refer to the Maintenance section (pg. 11 - 13).

IDENTIFICATION AND ORDERING

MODEL AND SERIAL NUMBER

The TOPDRESSER 2300 has two identification numbers: a model number and serial number. The two numbers are stamped on a plate which is riveted on the hydraulic tank. In any correspondence concerning the TOPDRESSER 2300, supply model and serial numbers to be sure that the correct information and replacement parts are obtained.

To order replacement parts from an authorized TORO Distributor, supply the following information:

1. Model and serial numbers of the machine.

2. Part number, description and quantity of parts desired.

Note: Do not order by reference number if a parts catalog is being used; use the part number.

MAINTENANCE RECORD

The Toro Commercial Products Two Year Limited Warranty

The Toro Company warrants your 1996 or newer Toro Commercial Product ("Product") purchased after January 1, 1997, to be free from defects in materials or workmanship for the period of time listed below*. Where a warrantable condition exists, Toro will repair the Product at no cost to you including diagnosis, labor, parts, and transportation. This warranty begins on the date the Product is delivered to the original retail purchaser.

Warranty Duration: Two years or 1500 operational hours*, whichever occurs first.

*** Product equipped with hour meter.**

Owner Responsibilities:

As the Product owner, you are responsible for required maintenance and adjustments stated in your Owner's Manual. Failure to perform required maintenance and adjustments can be grounds for disallowing a warranty claim.

Instructions For Obtaining Warranty Service:

You are responsible for notifying the Commercial Products Distributor or Authorized Commercial Products Dealer from whom you purchased the Product as soon as you believe a warrantable condition exists.

If you need help locating a Commercial Products Distributor or Authorized Dealer, or if you have questions regarding your warranty rights or responsibilities, you may contact us at:

Toro Commercial Products Service Department
8111 Lyndale Avenue South
Minneapolis, MN, 55420-1196
Telephone: (612) 888-8801
Facsimile:(612) 887-8258
E-Mail: Commercial.Service@Toro.Com

Maintenance Parts:

Parts scheduled for replacement as required maintenance ("Maintenance Parts"), are warranted for the period of time up to the scheduled replacement time for that part.

Items/Conditions Not Covered:

Not all product failures or malfunctions that occur during the warranty period are defects in materials or workmanship. The items / conditions listed below are not covered by this warranty:

- Product failures which result from the use of non-Toro replacement parts, or from installation and use of add-on, modified, or unapproved accessories are not covered.
- Product failures which result from failure to perform required maintenance and/or adjustments are not covered.
- Product failures which result from operating the Product in an abusive, negligent or reckless manner are not covered.
- This warranty does not apply to parts subject to consumption through use unless found to be defective. Examples of parts which are consumed, or used up, during normal Product operation include, but are not limited to, blades, reels, bedknives, tines, spark plugs, castor wheels, tires, filters, belts, etc.
- This warranty does not apply to failures caused by outside influence. Items considered to be outside influence include, but are not limited to, weather, storage practices, contamination, use of unapproved coolants, lubricants, additives, or chemicals, etc.
- This warranty does not apply to normal "wear and tear" items. Normal "Wear and Tear" includes, but is not limited to, damage to seats due to wear or abrasion, worn painted surfaces, scratched decals or windows, etc.

Other Legal Disclaimers:

The above remedy of product defects through repair by an authorized distributor or dealer is the purchaser's sole remedy for any defect. This warranty gives you specific legal rights, and you may also have other rights which vary from state to state.

Except for the Emissions warranty referenced below, if applicable, there is no other express warranty. All implied warranties of merchantability and fitness for use are limited to the duration of the express warranty.

Some states do not allow limitations on how long an implied warranty lasts, so the above limitation may not apply to you.

The Toro Company is not liable for indirect, incidental or consequential damages in connection with the use of the Product, including any cost or expense of providing substitute Product or service during periods of malfunction or non- use.

Some states do not allow the exclusion of incidental or consequential damages, so the above exclusion may not apply to you.

Note to California residents: The Emissions Control System on your Product may be covered by a separate warranty meeting requirements established by the U.S. Environmental Protection Agency (EPA), or the California Air Resources Board (CARB). The hour limitations set forth above do not apply to the Emissions Control System Warranty. Refer to the California Emission Control Warranty Statement printed in your Owner's Manual or contained in the engine manufacturer's