Form No. 3442-972 Rev B

TORO®

Count on it.

Operator's Manual

# Workman® GTX Electric Utility Vehicle

**Model No. 07131TC—Serial No. 407700000 and Up**

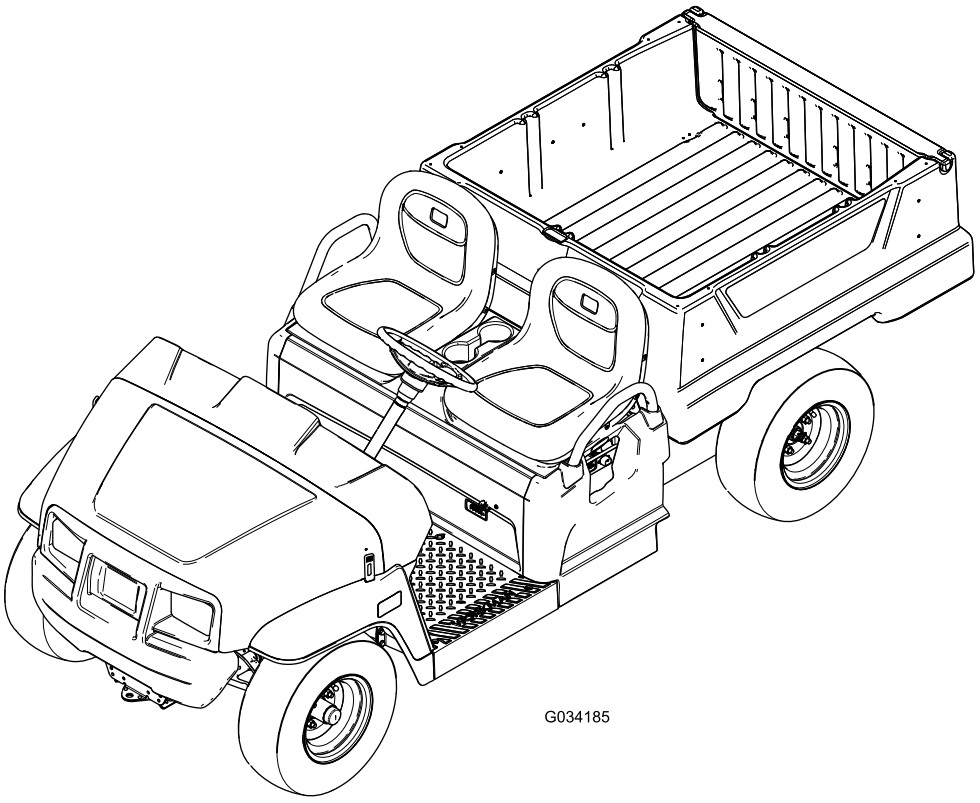

G034185

Register at www.Toro.com.
Original Instructions (EN)

CE

*3442-972*

This product complies with all relevant European directives; for details, please see the separate product specific Declaration of Conformity (DOC) sheet.

**⚠ WARNING**

**CALIFORNIA**
**Proposition 65 Warning**

**The power cord on this product contains lead, a chemical known to the State of California to cause birth defects or other reproductive harm. Wash hands after handling.**

**Battery posts, terminals, and related accessories contain lead and lead compounds, chemicals known to the State of California to cause cancer and reproductive harm. Wash hands after handling.**

# Introduction

This utility vehicle is intended to be primarily used off-highway to transport people and material loads. Using this product for purposes other than its intended use could prove dangerous to you and bystanders.

Read this information carefully to learn how to operate and maintain your product properly and to avoid injury and product damage. You are responsible for operating the product properly and safely.

Visit www.Toro.com for product safety and operation training materials, accessory information, help finding a dealer, or to register your product.

Whenever you need service, genuine Toro parts, or additional information, contact an Authorized Service Distributor or Toro Customer Service and have the model and serial numbers of your product ready. Figure 1 identifies the location of the model and serial numbers on the product. Write the numbers in the space provided.

***Important:*** **With your mobile device, you can scan the QR code on the serial number decal (if equipped) to access warranty, parts, and other product information.**

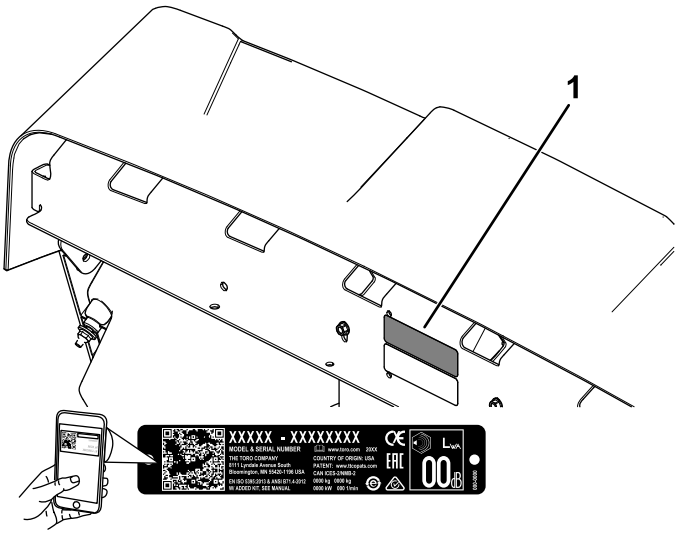


g282597

**Figure 1**

1. Model and serial number location

**Model No.** _____

**Serial No.** _____

This manual uses 2 words to highlight information. **Important** calls attention to special mechanical information and **Note** emphasizes general information worthy of special attention.

**© 2021—The Toro® Company**
**8111 Lyndale Avenue South**
**Bloomington, MN 55420**



**Contact us at www.Toro.com.**
**Printed in the USA**
**All Rights Reserved**

The safety-alert symbol (Figure 2) appears both in this manual and on the machine to identify important safety messages that you must follow to avoid accidents. This symbol will appear with the word **Danger**, **Warning**, or **Caution**.

- **Danger** indicates an imminently hazardous situation which, if not avoided, **will** result in death or serious injury.
- **Warning** indicates a potentially hazardous situation which, if not avoided, **could** result in death or serious injury.
- **Caution** indicates a potentially hazardous situation which, if not avoided, **may** result in minor or moderate injury.



g000502

**Figure 2**
Safety-alert symbol

# Contents


Safety ..... 5
General Safety ..... 5
Safety and Instructional Decals ..... 6
Setup ..... 9
1 Installing the Steering Wheel (International Models Only) ..... 9
2 Checking the Fluid Levels and Tire Pressure ..... 9
3 Burnishing the Brakes ..... 10
4 Reading the Manual and Viewing the Setup Material ..... 10
Product Overview ..... 11
Controls ..... 12
Specifications ..... 15
Attachments/Accessories ..... 15
Before Operation ..... 16
Before Operation Safety ..... 16
Performing Daily Maintenance ..... 16
Checking the Tire Pressure ..... 16
Understanding and Using the Battery System ..... 16
Breaking in a New Machine ..... 18
During Operation ..... 18
During Operation Safety ..... 18
Operating the Cargo Bed ..... 20
Using the Rear Cargo Bed Accessory Mount ..... 22
Stopping the Machine ..... 23
Loading the Cargo Bed ..... 23
After Operation ..... 24
After Operation Safety ..... 24
Hauling the Machine ..... 24
Towing the Machine ..... 25
Towing a Trailer ..... 25
Maintenance ..... 26
Maintenance Safety ..... 26
Recommended Maintenance Schedule(s) ..... 26
Daily Maintenance Checklist ..... 27
Maintaining the Machine under Special Operating Conditions ..... 28
Pre-Maintenance Procedures ..... 28
Preparing the Machine for Maintenance ..... 28
Lifting the Machine ..... 29
Accessing the Hood ..... 29
Raising and Lowering the Seat Assembly ..... 30
Removing the Seat Assembly ..... 30
Installing the Seat Assembly ..... 30
Lubrication ..... 31
Greasing the Front Wheel Bearings ..... 31
Electrical System Maintenance ..... 34
Electrical System Safety ..... 34
Battery Safety ..... 34
Maintaining the Batteries ..... 35
Replacing the Fuses ..... 39
Maintaining the Headlights ..... 39
Drive System Maintenance ..... 40
Maintaining the Tires ..... 40
Inspecting the Steering and Suspension Components ..... 41
Adjusting the Front Wheel Alignment ..... 41
Checking the Transaxle-Fluid Level ..... 42
Changing the Transaxle Fluid ..... 43
Brake Maintenance ..... 43
Checking the Parking Brake ..... 43
Adjusting the Parking Brake ..... 43
Checking the Brake-Fluid Level ..... 44
Inspecting the Brakes ..... 44
Replacing the Service and Parking-Brake Pads ..... 45
Changing the Brake Fluid ..... 45
Chassis Maintenance ..... 45
Adjusting the Cargo-Bed Latches ..... 45
Cleaning ..... 46
Washing the Machine ..... 46
Storage ..... 47
Storage Safety ..... 47
Storing the Machine ..... 47
Troubleshooting ..... 48

# Safety

This machine has been designed in accordance with the requirements of SAE J2258 (Nov 2016).

# General Safety

This product is capable of causing personal injury. Always follow all safety instructions to avoid serious personal injury.

- Read and understand the contents of this *Operator's Manual* before you start the machine. Ensure that everyone using this product knows how to use it and understands the warnings.
- Use your full attention while operating the machine. Do not engage in any activity that causes distractions; otherwise, injury or property damage may occur.
- Do not put your hands or feet near moving components of the machine.
- Do not operate the machine without all guards and other safety protective devices in place and working on the machine.
- Keep bystanders and children out of the operating area. Never allow children to operate the machine.
- Stop and shut off the machine and remove the key before servicing.

Improperly using or maintaining this machine can result in injury. To reduce the potential for injury, comply with these safety instructions and always pay attention to the safety-alert symbol ⚠, which means Caution, Warning, or Danger—personal safety instruction. Failure to comply with these instructions may result in personal injury or death.

# Safety and Instructional Decals

Safety decals and instructions are easily visible to the operator and are located near any area of potential danger. Replace any decal that is damaged or missing.

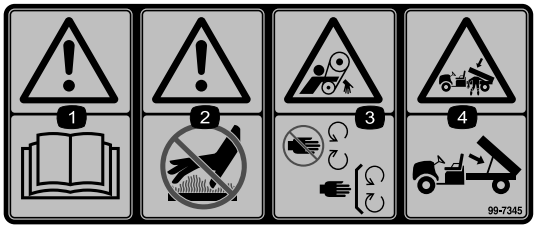


decal99-7345

**99-7345**

1. Warning—read the *Operator's Manual*.
2. Warning—do not touch the hot surface.
3. Entanglement hazard, belt—stay away from moving parts; keep all guards in place.
4. Crushing hazard, cargo box—use the prop rod to support the cargo bed.

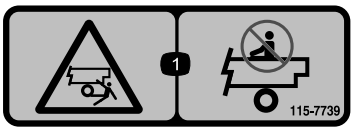


decal115-7739

**115-7739**

1. Falling, crushing hazard—do not carry passengers.




decal131-8412

**131-8412**

1. Horn
2. Forward
3. Neutral
4. Reverse
5. Off
6. On
7. Turning on—1) Sit in the driver's seat; 2) Disengage the parking brake; 3) Turn the key switch to the start position; 4) Push down on the pedal.
8. Turning off—1) Release the pedal; 2) Engage the parking brake; 3) Turn the key switch to the stop position; 4) Remove the key from the key switch.




decal131-8414

**131-8414**

1. Warning—read the *Operator's Manual*.
2. Warning—receive proper training before operating the machine.
3. Tipping hazard—drive slowly across or up slopes; take turns slowly; do not exceed speeds of 25 kph (16 mph); drive slowly when hauling cargo; drive slowly on uneven terrain.
4. Falling hazard; severing hazard of limbs—do not carry passengers in the bed; do not carry extra passengers in between the seats; do not put your arms or legs outside of the machine while operating.

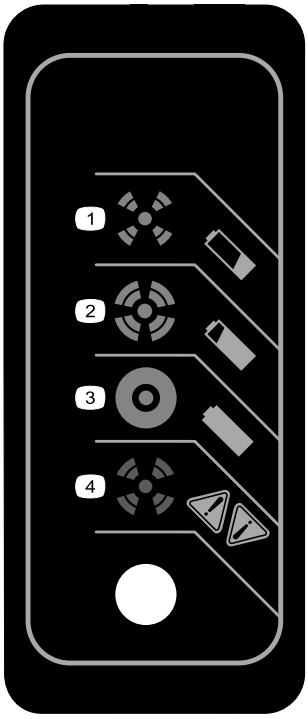


decal131-8495

**131-8495**

1. The battery is empty.
2. The battery is almost charged.
3. The battery is charged.
4. Charger fault; refer to the charger manual for the fault codes.

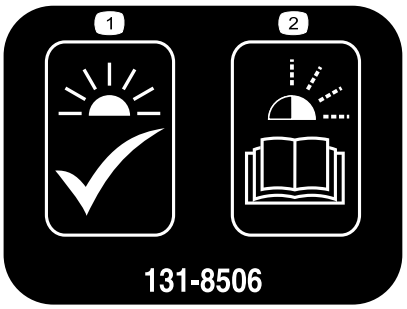


decal131-8506

**131-8506**

1. Solid light—unit is prepared for operation.
2. Flashing light—refer to the charger manual for the fault codes.

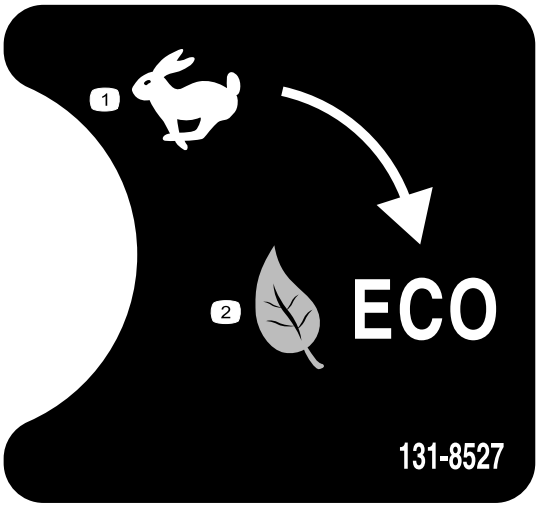


decal131-8527

**131-8527**

1. Performance mode
2. Eco mode

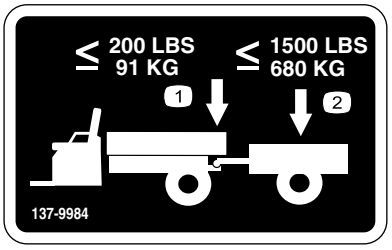


decal137-9984

**137-9984**

1. Do not exceed a tongue weight of 91 kg (200 lb).
2. Do not exceed a transport load of 680 kg (1,500 lb).

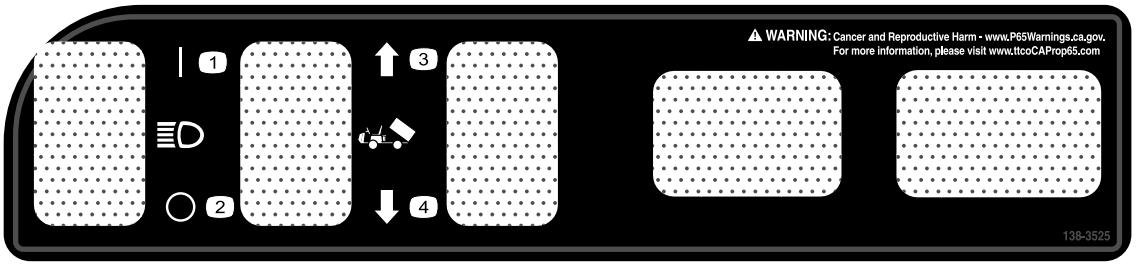


decal138-3525

**138-3525**

1. Light—On
2. Light—Off
3. Raise the bed.
4. Lower the bed.

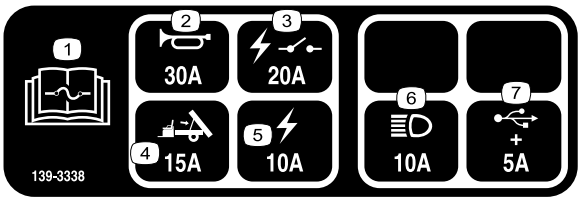


decal139-3338

**139-3338**

1. Read the *Operator's Manual* for fuse information.
2. Horn (30 A)
3. Electric relay (20 A)
4. Bed lift (15 A)
5. Electric (10 A)
6. Headlights (10 A)
7. USB power point (5 A)

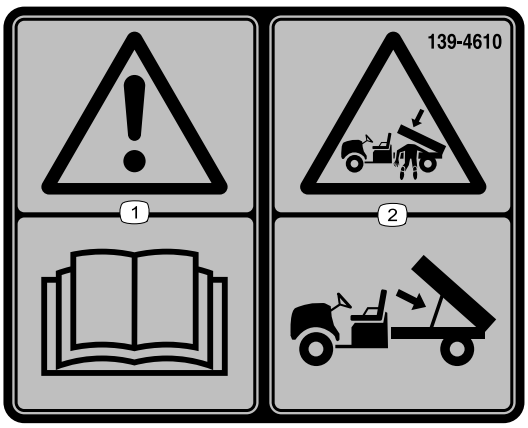


decal139-4610

**139-4610**

1. Warning—read the *Operator's Manual*.
2. Crushing hazard, cargo box—use the prop rod to support the cargo bed.

# Setup

## Loose Parts

Use the chart below to verify that all parts have been shipped.

| Procedure | Description | Qty. | Use |
|---|---|---|---|
| 1 | Steering wheel<br>Steering wheel cover<br>Washer (1/2 inch)<br>Dust cover | 1<br>1<br>1<br>1 | Install the steering wheel (International models only). |
| 2 | No parts required | – | Check the fluid levels and tire pressure. |
| 3 | No parts required | – | Burnish (break-in) the brakes. |
| 4 | Operator's Manual<br>Engine owner's manual<br>Registration card<br>Predelivery Inspection Form<br>Certificate of Quality<br>Key | 1<br>1<br>1<br>1<br>1<br>2 | Read the Operator's Manual and view the setup material before operating the machine. |

**Note:** Determine the left and right sides of the machine from the normal operating position.

# 1

# Installing the Steering Wheel (International Models Only)

**Parts needed for this procedure:**

| | |
|---|---|
| 1 | Steering wheel |
| 1 | Steering wheel cover |
| 1 | Washer (1/2 inch) |
| 1 | Dust cover |

## Procedure

1. If the cover is installed, remove it from the hub of the steering wheel (Figure 3).
2. Remove the locknut (1/2 inch) from the steering shaft (Figure 3).
3. Slide the steering wheel, dust cover, and washer (1/2 inch) onto the steering shaft (Figure 3).

   **Note:** With the front wheels straight, orient the steering wheel so that the smaller spoke on the steering wheel is vertical.
4. Secure the steering wheel to the shaft with the locknut (1/2 inch) and tighten it to 18 to 30 N·m (13 to 22 ft-lb).
5. Install the cover on the steering wheel (Figure 3).

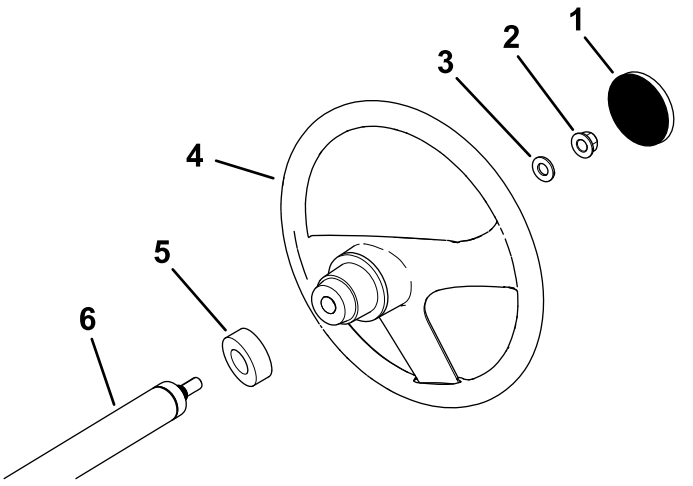


**Figure 3**

1. Steering wheel cover
2. Locknut (1/2 inch)
3. Washer (1/2 inch)
4. Steering wheel
5. Dust cover
6. Steering shaft

# 2

# Checking the Fluid Levels and Tire Pressure

**No Parts Required**

## Procedure

1. Check the water level in the batteries before you operate the machine; refer to Checking the Water Level of the Batteries (page 37).
2. Ensure that the batteries are charged; refer to Charging the Batteries (page 35).
3. Check the brake-fluid level before you operate the machine; refer to Checking the Brake-Fluid Level (page 44).
4. Check the air pressure in the tires; refer to Checking the Tire Pressure (page 16).

# 3

# Burnishing the Brakes

**No Parts Required**

## Procedure

To ensure optimum performance of the brake system, burnish (break-in) the brakes before use.

1. Bring the machine up to full speed, apply the brakes to rapidly stop the machine without locking up the tires.
2. Repeat this procedure 10 times, waiting 1 minute between stops, to avoid overheating the brakes.

   ***Important:*** **This procedure is most effective if the machine is loaded with 227 kg (500 lb).**

# 4

# Reading the Manual and Viewing the Setup Material

**Parts needed for this procedure:**

| | |
|---|---|
| 1 | *Operator's Manual* |
| 1 | Engine owner's manual |
| 1 | Registration card |
| 1 | *Predelivery Inspection Form* |
| 1 | Certificate of Quality |
| 2 | Key |

## Procedure

- Read the *Operator's Manual* and the engine owner's manual.
- Fill out the registration card.
- Complete the *Predelivery Inspection Form*.
- Review the *Certificate of Quality*.

# Product Overview

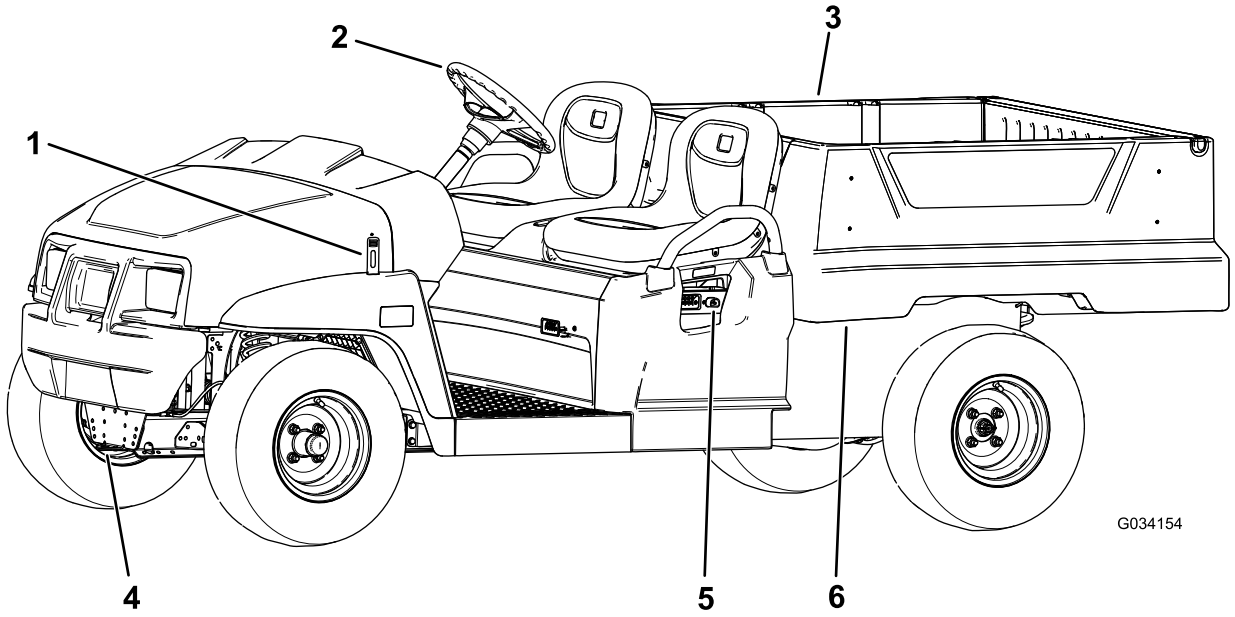


g034154

**Figure 4**

1. Hood latch
2. Steering wheel
3. Cargo bed
4. Towing tongue
5. Battery charger
6. Cargo-bed lever

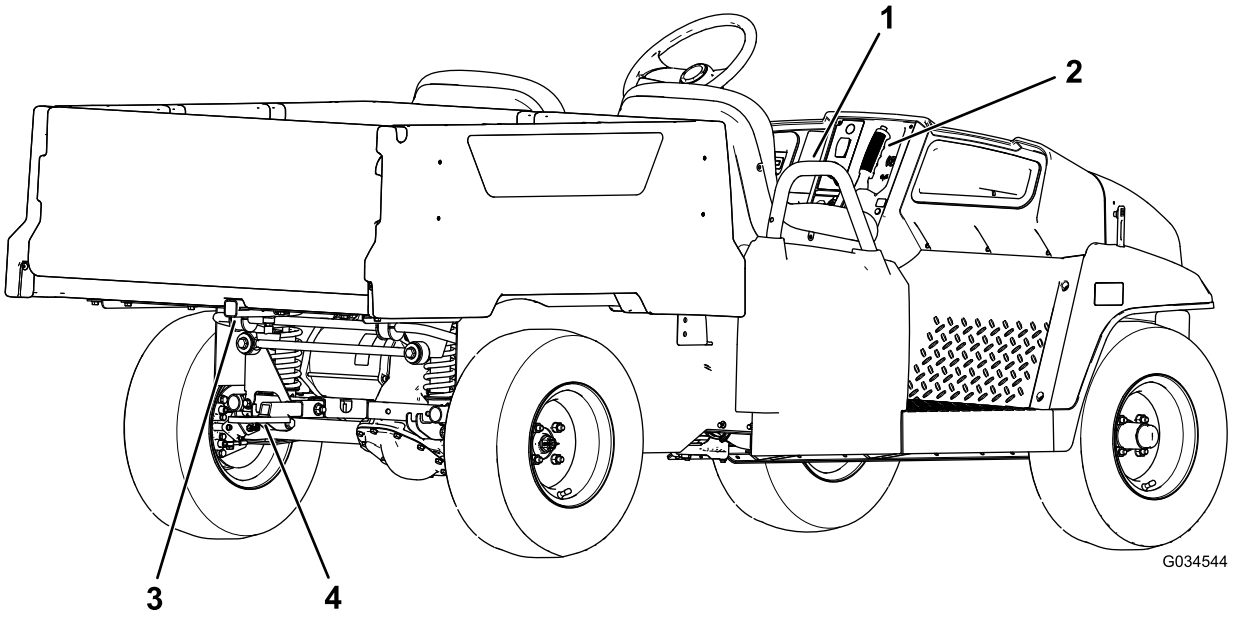


g034544

**Figure 5**

1. Passenger handhold
2. Parking-brake lever
3. Rear cargo-bed-accessory mount
4. Trailer hitch

# Controls

Become familiar with all the controls before you start the engine and operate the machine.

## Control Panel

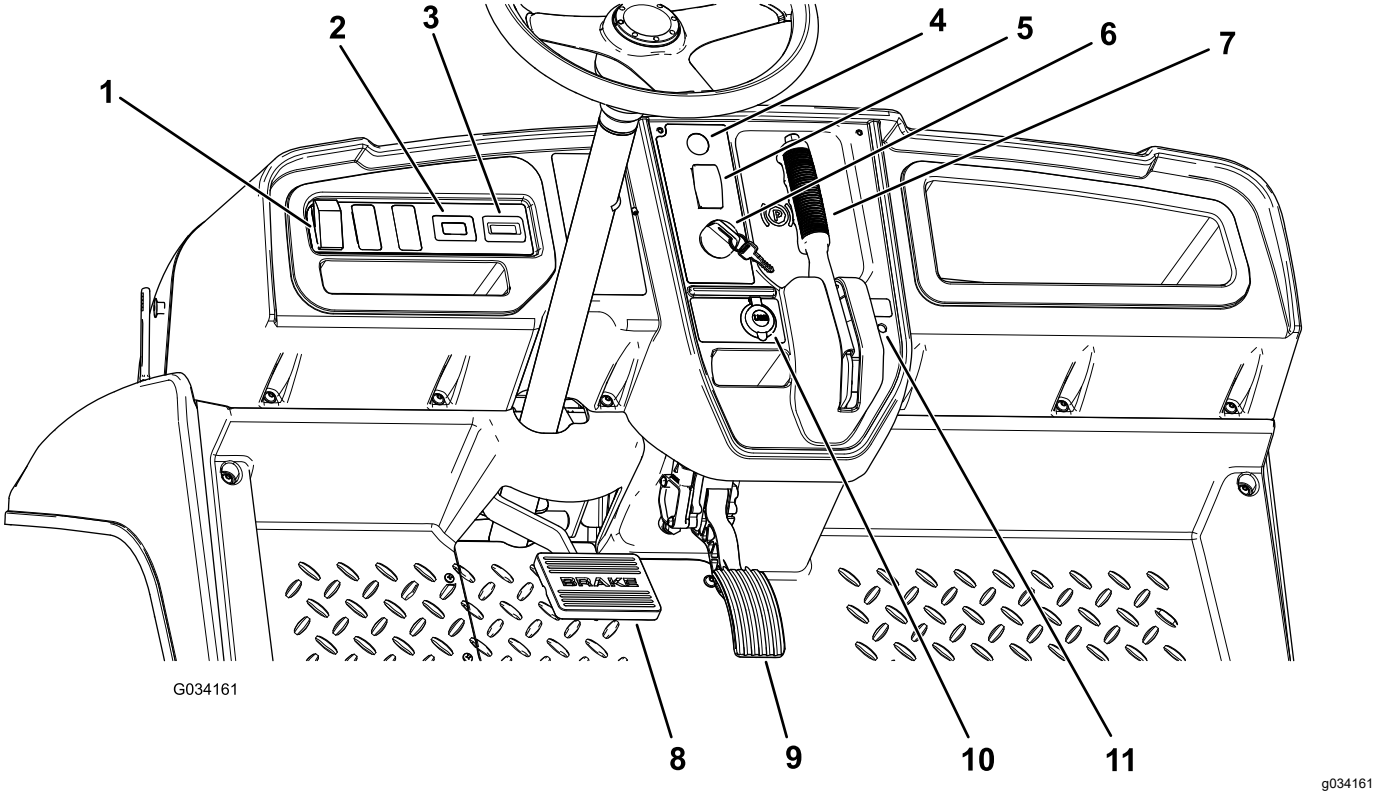


**Figure 6**

1. Light switch
2. Hour meter
3. Battery-discharge indicator
4. Horn button
5. Gear-shift selector
6. Key switch
7. Parking-brake lever
8. Brake pedal
9. Accelerator pedal
10. USB power point
11. Status-indicator light

## Accelerator Pedal

Use the accelerator pedal (Figure 6) to vary ground speed of the machine. Pressing down the accelerator pedal starts the machine. Pressing the pedal farther increases ground speed. Releasing the pedal slows the machine, and the machine shuts off.

The maximum forward speed in performance mode is 26 km/h (16 mph) as shown in Figure 9.

The maximum forward speed in economy mode is 19 km/h (12 mph) as shown in Figure 9.

## Brake Pedal

Use the brake pedal to stop or slow the machine (Figure 6).

**⚠ CAUTION**

**Operating a machine with worn or incorrectly adjusted brakes can may result in personal injury.**

**If the brake pedal travels to within 25 mm (1 inch) of the machine floor board, adjust or repair the brakes.**

## Parking-Brake Lever

The parking-brake lever is located on the control panel (Figure 6).

Whenever you shut off the machine, engage the parking brake to prevent the machine from accidentally moving. If the machine is parked on a steep grade, ensure that you engage the parking brake.

To engage the parking brake, pull the parking-brake lever toward you (Figure 7).

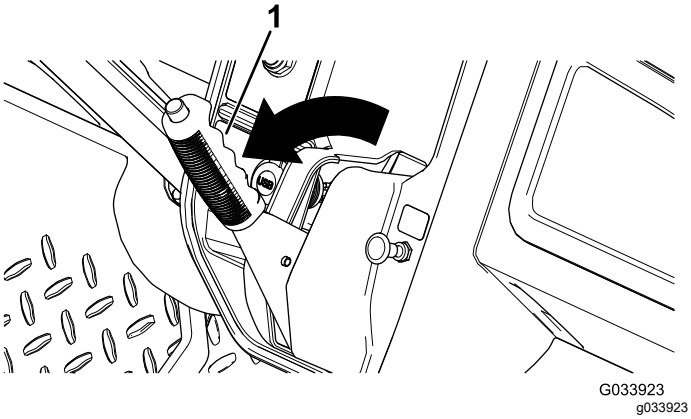


**Figure 7**

1. Parking-brake lever

To disengage the parking brake, push down the button on top of the parking-brake lever, pull the parking-brake lever toward you to release pressure, and then push the parking-brake lever forward (Figure 8).

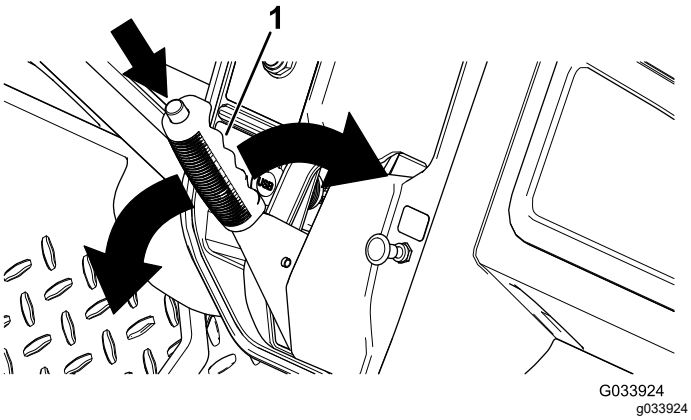


**Figure 8**

1. Parking-brake lever

## Direction Selector

The direction selector is located to the left of the parking-brake lever. The direction selector has 3 positions: FORWARD, REVERSE, and NEUTRAL (Figure 6).

**Note:** The machine can be in any of the 3 positions, but only moves in the FORWARD and REVERSE positions.

***Important:*** **Always stop the machine before changing direction.**

## Horn Button

The horn button is located on the control panel (Figure 6). Press the horn button to sound the horn.

## Light Switch

Use the light switch (Figure 6) to illuminate the headlights. Push the light switch up to turn on the headlights. Push the light switch down to turn off the lights.

## Battery-Discharge Indicator

The battery-discharge indicator is located to the left of the steering column (Figure 6). The battery-discharge indicator indicates the remaining charge in the batteries. When the batteries are fully charged, 10 indicator bars extend from the 0 to the 1 position. As you use the charge, the indicator bars disappear, starting at the right side of the meter. For detailed information on the battery meter, refer to Understanding and Using the Battery System (page 16).

## Hour Meter

The hour meter is located to the right of the light switch (Figure 6). Use the hour meter to find out the total number of operating hours. The hour meter starts to function whenever you turn the key switch to the ON position or if the machine is running.

**Note:** When the machine is running, the hour meter blinks continuously, recording usage.

## USB Power Point

The USB power point is located to the left of the parking-brake lever (Figure 6). Use the power point to power mobile devices.

***Important:*** **When you are not using the USB power point, insert the rubber plug to prevent damage to the power point.**

## Key Switch

Use the key switch (Figure 6), to run and shut off the machine.

The key switch has 2 positions: ON and OFF. Rotate the key clockwise to the ON position to operate the machine. When you stop the machine, rotate the key counterclockwise to the OFF position to shut off the machine. Remove the key whenever you leave the machine.

## Supervisor Speed-Limit Switch

The supervisor speed-limit switch, located under the seat assembly, has 2 positions: PERFORMANCE and ECONOMY. Rotate the switch clockwise to the ECONOMY position to limit the maximum machine speed to 19 km/h (12 mph). Rotate the switch counterclockwise to the PERFORMANCE position to restore the maximum speed of the machine to 26 km/h (16 mph) as shown in Figure 9.

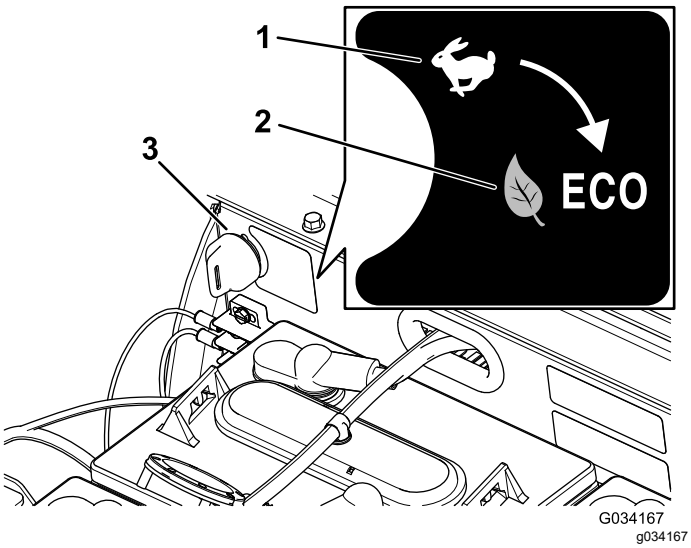


**Figure 9**

1. PERFORMANCE position
2. ECONOMY position
3. Supervisor speed-limit switch

## Status-Indicator Light

The status-indicator light is located to the right of the parking-brake lever on the control panel (Figure 6).

When the machine is turned on, the green status-indicator light illuminates either solid or blinking.

If the light is solid, this indicates that the machine is ready for normal operation. If the light is blinking, there is an issue that needs to be resolved before continuing with normal operation of the machine.

If the status-indicator light blinks 2 times, this indicates that the parking brake is engaged while in the FORWARD or REVERSE position on the direction selector. Disengage the parking brake to shut off the status-indicator light.

Refer to Troubleshooting (page 48) if the status-indicator light blinks more than 2 times.

## Passenger Handholds

The passenger handholds are located on the outside of each seat (Figure 10).

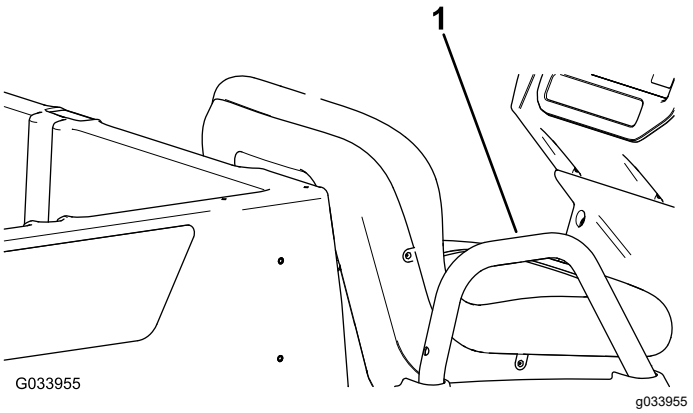


**Figure 10**

Passenger Side Shown

1. Passenger handhold

# Specifications

**Note:** Specifications and design are subject to change without notice.

| | |
|---|---|
| Base weight | Dry 633 kg (1,395 lb) |
| Rated capacity (on level ground) | 544 kg (1,200 lb) total, including 91 kg (200 lb) operator and 91 kg (200 lb) passenger, load, accessories, and attachments |
| Gross vehicle weight (GVW)—on level ground | 1177 kg (2,595 lb) total, including all of the weights listed above |
| Maximum cargo capacity (on level ground) | 363 kg (800 lb) total, including rear-mounted accessories |
| Maximum rear cargo bed accessory mount capacity | 45 kg (100 lb) total |
| Tow capacity | Tongue weight: 91 kg (200 lb)<br>Gross trailer weight (GTW): 680 kg (1,500 lb) |
| Overall width | 119 cm (47 inches) |
| Overall length | 302 cm (119 inches) |
| Overall height | 127.5 cm (50-3/16 inches) |
| Ground clearance | 21.6 cm (8-1/2 inches) at the front with no load or operator<br>14 cm (5-1/2 inches) at the rear with no load or operator |
| Wheel base | 220 cm (86-5/8 inches) |
| Wheel tread (center line to center line) | Front: 119 cm (47 inches)<br>Rear: 119 cm (47 inches) |
| Cargo bed length | Inside: 102 cm (40 inches)<br>Outside: 114.3 cm (45 inches) |
| Cargo bed width | Inside: 98 cm (38-1/2 inches)<br>Outside of the molded fenders: 107.3 cm (42-5/16 inches) |
| Cargo bed height | 28 cm (11 inches) inside |

Specifications listed are with Trojan T-125 batteries.

Installing non-standard batteries may reduce the cargo-bed capacity.

## Attachments/Accessories

A selection of Toro approved attachments and accessories is available for use with the machine to enhance and expand its capabilities. Contact your Authorized Service Dealer or authorized Toro distributor or go to www.Toro.com for a list of all approved attachments and accessories.

To ensure optimum performance and continued safety certification of the machine, use only genuine Toro replacement parts and accessories. Replacement parts and accessories made by other manufacturers could be dangerous, and such use could void the product warranty.

# Operation

## *Before Operation*

## Before Operation Safety

### General Safety

- Never allow children or people who are not trained or physically capable to safely operate or service the machine. Local regulations may restrict the age of the operator. The owner is responsible for training all operators and mechanics.
- Become familiar with the safe operation of the equipment, operator controls, and safety signs.
- Shut off the machine, remove the key, and wait for all movement to stop before you leave the operator's position. Allow the machine to cool before adjusting, servicing, cleaning, or storing it.
- Know how to stop and shut off the machine quickly.
- Ensure that there are not more occupants (you and your passenger(s)) than the number of handholds equipped on the machine.
- Check that all safety devices and decals are in place. Repair or replace all safety devices and replace all illegible or missing decals. Do not operate the machine unless they are present and functioning properly.

## Performing Daily Maintenance

**Service Interval:** Before each use or daily

Before starting the machine each day, perform the Each Use/Daily procedures listed in Maintenance (page 26).

## Checking the Tire Pressure

**Service Interval:** Before each use or daily

**Front and rear tires air pressure specification:** 165 to 207 kPa (24 to 30 psi)

***Important:*** **Do not exceed the maximum air pressure indicated on the sidewall of the tire.**

**Note:** The air pressure needed in the tires is determined by the payload that you intend to carry.

1. Check the air pressure in the tires.
   - Use lower air pressure in the tires for lighter payloads, for less soil compaction, for a smoother ride, and to minimize tire marks on the ground.
   - Use higher air pressure in the tires for carrying heavier payloads at higher speeds.
2. If necessary, adjust the air pressure in the tires by adding or removing air in the tires.

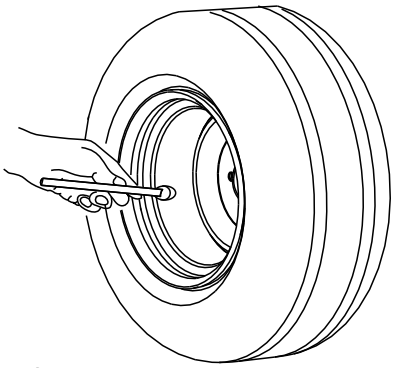


**Figure 11**

## Understanding and Using the Battery System

### Understanding Deep-Cycle Batteries

The machine contains 8 deep-cycle, lead-acid batteries that supply power to the motor and accessories. A deep-cycle battery is not the same as an automobile battery. An automobile battery is designed to provide a surge of power to start the machine and moderate power to run the lights and accessories when the motor if off or idling. The alternator then continuously charges as the automobile runs. As such, an automobile battery seldom drops below 90% of the maximum charge level.

A deep-cycle battery is designed to be a primary power source to provide a sustained output. Deep-cycle batteries are typically discharged as low as 20 to 30% of the maximum charge level. A discharge this low is considered a deep discharge.

***Important:*** **Repeated deep-discharge cycles reduces the battery life.**

Lead-acid batteries produce electricity through a chemical reaction between lead plates and sulfuric acid. Charging a battery reverses the chemical reaction, allowing the battery to once again produce electricity.

A battery is a perishable item that has a limited lifetime (Figure 12). When a battery is new, it requires

a break-in period to establish efficient electrical production. This break in period usually requires 100 to 150 discharge/charge cycles.

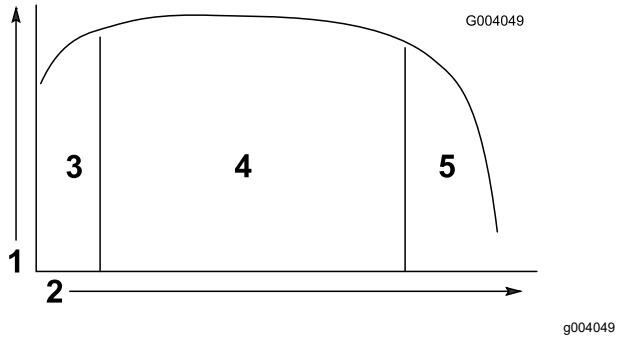


**Figure 12**
Battery-Lifetime Table

1. Battery capacity
2. Discharge/charge cycles
3. Break-in period (100 to 150 cycles)
4. Prime battery life
5. End of the battery life

After the break-in period, the battery maintains a high capacity for many cycles. The number of cycles that a battery performs depends on the following:

- Battery maintenance—improper maintenance severely reduces the life of the batteries.
- Depth of discharge between charge cycles—**the deeper the batteries are discharged on a regular basis between charges, the shorter the service life the batteries will have.**
- Charge frequency—fully charge the batteries whenever possible.

  ***Important:*** **Fully discharging the batteries damages them and reduces their life.**
- Low water levels—**if the lead plates become exposed, it may permanently damage the batteries.** Perform the following to maintain the electrolyte level:

  **After fully charging the batteries**, fill the batteries with distilled or deionized water; refer to Checking the Water Level of the Batteries (page 37) and Adding Distilled or Deionized Water to the Batteries (page 37).

  ***Important:*** **Fully charge the batteries before adding the water to the batteries. While charging, the electrolyte increases in volume, and filling a low battery before fully charging the batteries can cause the electrolyte to overflow and leak out of the vent.**

At the end of the battery life, the batteries gradually lose electric capacity.

# Using the Battery System

When your batteries are fully charged, the tenth bar (far right) illuminates on the battery-discharge indicator (Figure 13).

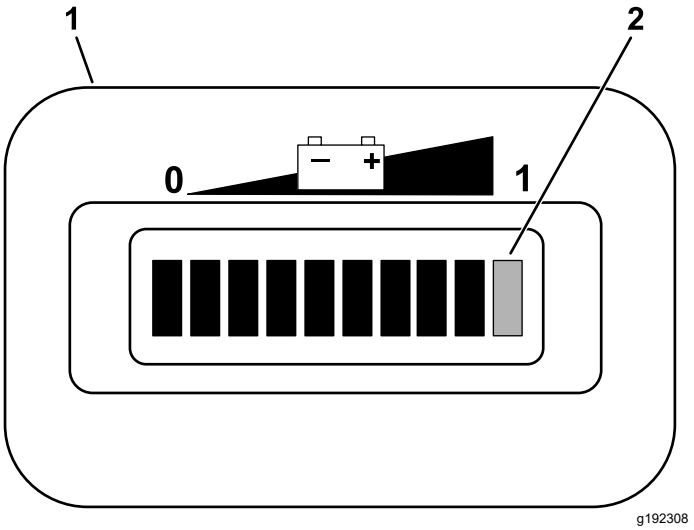


**Figure 13**

1. Battery-discharge indicator
2. Charge-indicator bars

As you use the machine, the bars disappear as the electrical capacity of the batteries is used.

When only the second bar from the left remains on the battery-discharge indicator, it is a good time to charge (Figure 14).

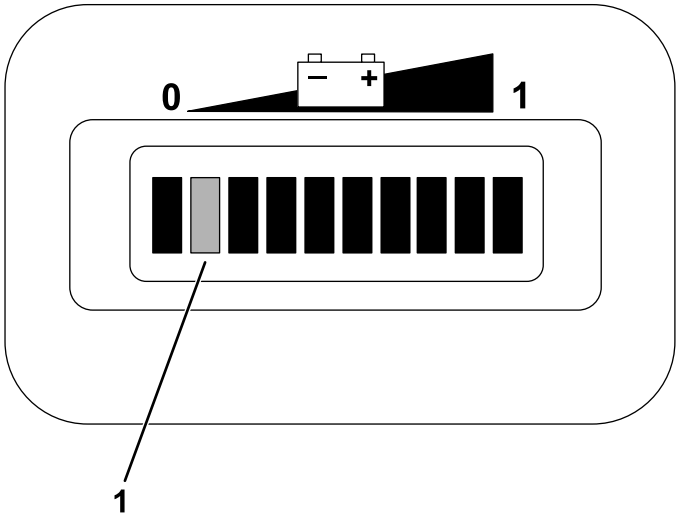


**Figure 14**

1. The 2 left bars alternately blink until you charge the batteries.

If you continue to use the machine with only 2 bars remaining, bars 1 and 2 alternately flash.

***Important:*** **When only the second bar from the left remains on the battery-discharge indicator, the machine may enter a reduced-speed mode; this mode aids in protecting the batteries, but prolonged operation in this mode can damage the batteries and/or the machine. Avoid draining your batteries down to the second bar from the left to prevent this issue. Charge the batteries immediately.**

**If the batteries become fully discharged, the machine shuts down. *Do not allow the batteries to become fully discharged.***

***Important:*** **To obtain maximum battery life, always charge the batteries before the charge reaches the second bar from the left on the screen. Regularly depleting the batteries to lower than the second bar from the left reduces the life of the batteries.**

# Breaking in a New Machine

**Service Interval:** After the first 100 hours—Perform the breaking in a new machine guidelines.

Perform the breaking in a new machine guidelines to provide proper performance and long life for the machine.

- Check the brake fluid and the water level in the batteries regularly.
- Avoid hard braking situations for the first several hours of new machine break-in operation. New brake linings may not be at optimum performance until several hours of use has caused the brakes to become burnished (broken-in); refer to 3 Burnishing the Brakes (page 10).
- Refer to Maintenance (page 26) for any special, low-hour checks.
- Check the front suspension positioning and adjust it, if necessary; refer to Adjusting the Front Wheel Alignment (page 41).

# *During Operation*

# During Operation Safety

## General Safety

- The owner/operator can prevent and is responsible for accidents that may cause personal injury or property damage.
- Passengers should sit in the designated seating positions only. Do not carry passengers in the cargo bed. Keep bystanders and pets away from the machine during operation.
- Wear appropriate clothing, including eye protection; long pants; substantial, and slip-resistant footwear. Tie back long hair and do not wear loose clothing or loose jewelry.
- Use your full attention while operating the machine. Do not engage in any activity that causes distractions; otherwise, injury or property damage may occur.
- Do not operate the machine while ill, tired, or under the influence of alcohol or drugs.
- Do not exceed the maximum gross vehicle weight (GVW) of the machine.
- Use extra caution when operating, braking, or turning the machine with a heavy load in the cargo bed.
- Carrying oversized loads in the cargo bed reduces the stability of the machine. Do not exceed the carrying capacity of the bed.
- Carrying material that cannot be bound to the machine adversely affects the steering, braking, and stability of the machine. When you carry material that cannot be bound to the machine, use caution when steering or braking.
- Carry a reduced load and reduce the ground speed of the machine when operating on rough, uneven terrain, and near curbs, holes, and other sudden changes in terrain. Loads may shift, causing the machine to become unstable.
- Before you start the machine, ensure that the transmission is in neutral, the parking brake is engaged, and you are in the operating position.
- You and your passengers should remain seated whenever the machine is moving. Keep your hands on the steering wheel; your passengers should use the handholds provided. Keep arms and legs within the machine body at all times.
- Operate the machine only in good visibility. Watch for holes, ruts, bumps, rocks, or other hidden objects. Uneven terrain could overturn the machine. Tall grass can hide obstacles. Use care

when approaching blind corners, shrubs, trees, or other objects that may obscure your vision.

- Do not drive the machine near drop-offs, ditches, or embankments. The machine could suddenly roll over if a wheel goes over the edge or if the edge gives way.
- Always watch out for and avoid low overhangs such as tree limbs, door jambs, overhead walkways, etc.
- Look behind and down before reversing the machine to be sure of a clear path.
- When using the machine on public roads, follow all traffic regulations and use any additional accessories that may be required by law, such as lights, turn signals, slow-moving vehicle (SMV) signs, and others as required.
- If the machine ever vibrates abnormally, stop and shut off the machine immediately, wait for all movement to stop, and inspect for damage. Repair all damage to the machine before resuming operation.
- It can take longer to stop the machine on wet surfaces than on dry surfaces. To dry out wet brakes, drive slowly on level ground while putting light pressure on the brake pedal.
- Operating the machine at high speed and then quickly stopping may cause the rear wheels to lock up, which impairs your control of the machine.
- Do not touch the motor while the motor is running, or soon after you turn off the motor, because these areas may be hot enough to cause burns.
- Do not leave a running machine unattended.
- Before you leave the operating position, do the following:
  - Park the machine on a level surface.
  - Move the direction selector to the NEUTRAL position.
  - Engage the parking brake.
  - Shut off the machine and remove the key.
  - Wait for all movement to stop.
- Do not operate the machine when there is the risk of lightning.
- Use accessories and attachments approved by The Toro® Company only.

## Multi-Passenger Safety

- Do not exceed the gross vehicle weight (GVW) of the machine. You must account for yourself, your passengers, and the load in the cargo bed contributing to the overall GVW of the machine.
- Passengers should sit in the designated seating positions only. Do not allow passengers to sit in the cargo bed.
- You and your passengers should remain seated whenever the machine is in motion.
- The additional machine length results in a larger turn radius, so allow more space to maneuver the machine.

## Slope Safety

**Note:** A 2-post Rollover Protection System (ROPS) is available for this machine as an accessory. Use a ROPS if you will work next to drop-offs, near water, in rough terrain, or on a slope, which could result in a rollover. Contact an authorized Toro distributor for more information.

Slopes are a major factor related to loss-of-control and tip-over accidents, which can result in severe injury or death.

- Survey the site to determine which slopes are safe for operating the machine and establish your own procedures and rules for operating on those slopes. Always use common sense and good judgment when performing this survey.
- If you feel uneasy operating the machine on a slope, do not do it.
- Keep all movement on slopes slow and gradual. Do not suddenly change the speed or direction of the machine.
- Avoid operating the machine on wet terrain. Tires may lose traction. A rollover can occur before the tires lose traction.
- Travel straight up and down a slope.
- If you begin to lose momentum while climbing a slope, gradually engage the brakes and slowly reverse the machine straight down the slope.
- Turning while going up or down a slope can be dangerous. If you must turn on a slope, do it slowly and cautiously.
- Heavy loads affect stability on a slope. Carry a reduced load and reduce your ground speed when operating on a slope or if the load has a high center of gravity. Secure the load to the cargo bed of the machine to prevent the load from shifting. Take extra care when hauling loads that shift easily (e.g., liquids, rock, sand, etc.).
- Avoid starting, stopping, or turning the machine on a slope, especially with a load. Stopping while going down a slope takes longer than stopping on level ground. If you must stop the machine, avoid sudden speed changes, which can cause the machine to tip or roll over. Do not engage the brakes suddenly when rolling rearward, as this may cause the machine to overturn.

## Loading and Dumping Safety

- Do not exceed the gross vehicle weight (GVW) of the machine when operating it with a load in the cargo bed and/or towing a trailer; refer to Specifications (page 15).
- Distribute the load in the cargo bed evenly to improve the stability and control of the machine.
- Before dumping, ensure that there is no one behind the machine.
- Do not dump a loaded cargo bed while the machine is sideways on a slope. The change in weight distribution may cause the machine to overturn.

# Operating the Cargo Bed

## Raising the Cargo Bed to the Dump Position

**⚠ WARNING**

**A raised bed could fall and injure persons that are working beneath it.**

- **Always use the prop rod to hold the bed up before working under the bed.**
- **Remove any load material from the bed before raising it.**

**⚠ WARNING**

**Driving the machine with the cargo bed raised could cause the machine to tip or roll easier. You could damage the structure of the cargo bed if you operate the machine with the bed raised.**

- **Operate the machine when the cargo bed is down.**
- **After emptying the cargo bed, lower it.**

**⚠ CAUTION**

**If a load is concentrated near the back of the cargo bed when you release the latches, the bed may unexpectedly tip open, injuring you or bystanders.**

- **Center loads in the cargo bed, if possible.**
- **Hold the cargo bed down and ensure that no one is leaning over the bed or standing behind it when releasing the latches.**
- **Remove all cargo from the bed before lifting the bed up to service the machine.**

1. Pull the lever on left, inside of the cargo bed toward you and lift the cargo bed up (Figure 15).

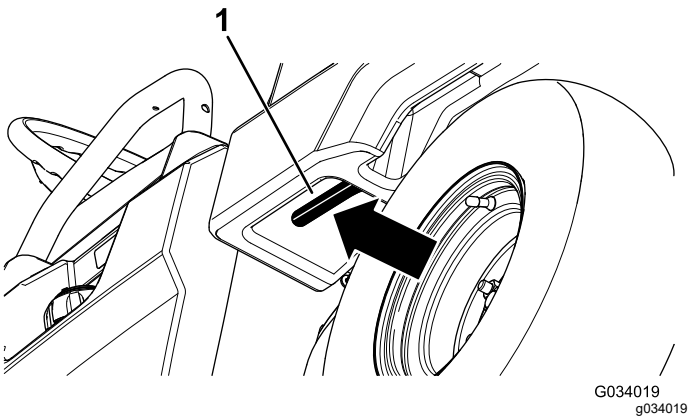


**Figure 15**

1. Cargo-bed lever

2. Pull the prop rod into the dump position detent slot to secure the bed for dumping (Figure 16).

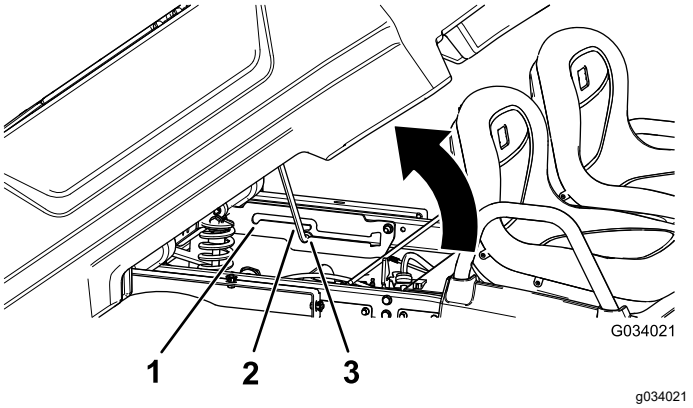


**Figure 16**

1. Service position detent slot
2. Prop rod
3. Dump position detent slot

## Raising the Cargo Bed to the Service Position

1. Pull the lever on left, inside of the cargo bed toward you and lift the cargo bed up (Figure 15).
2. Pull prop rod into the service position detent slot to secure the bed for maintenance (Figure 16).

## Lowering the Cargo Bed

**⚠ WARNING**

**The weight of the bed may be heavy. Hands or other body parts could be crushed.**

**Keep your hands and other body parts away when lowering the bed.**

1. Raise the cargo bed slightly by lifting up on the latch lever (Figure 15).
2. Pull the prop rod out of the detent slot (Figure 16).
3. Lower the bed until it latches securely.

## Opening the Tailgate

1. Ensure that the cargo bed is down and latched.
2. Using both hands, raise the tailgate using the ridge near the top of the tailgate (Figure 17).
3. Lower the tailgate until it is flush with the bottom of the cargo bed (Figure 17).

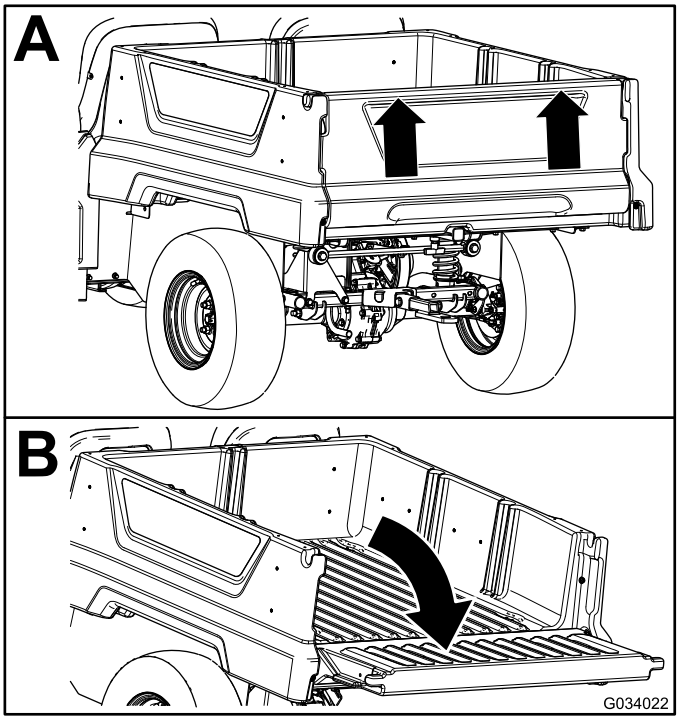


g034022

**Figure 17**

## Closing the Tailgate

If you unloaded loose material such as sand, landscaping rock, or wood chips from the cargo bed of the machine, some of the material that you unloaded may have lodged in the hinge area of the tailgate. Perform the following steps before closing the tailgate.

1. Use your hands to remove as much of the material from the hinge area as possible.
2. Rotate the tailgate to approximately the 45° position (Figure 18).

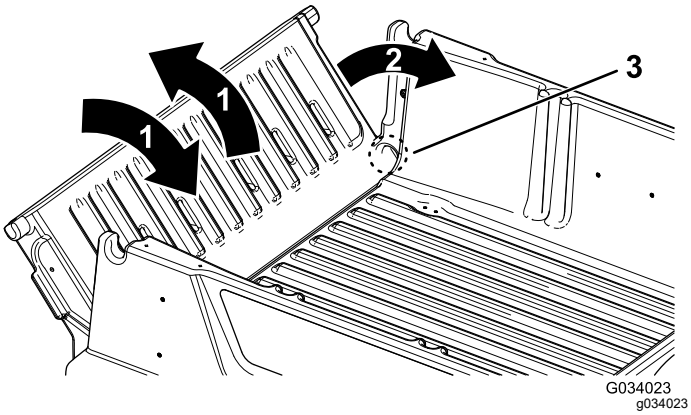


**Figure 18**

1. Rotate the tailgate back and forth several times.
2. Rotate the tailgate to approximately the 45° position.
3. Hinge area

3. Use a short, shaking motion to rotate the tailgate back and forth several times (Figure 18).

   **Note:** This action helps move material away from the hinge area.
4. Lower the tailgate and check for material remaining in the hinge area.
5. Repeat steps 1 through 4 until the material is removed from the hinge area.
6. Rotate the tailgate up and lift the tailgate into the notches in the cargo bed.

# Using the Rear Cargo Bed Accessory Mount

Use the rear cargo bed accessory mount to attach accessories to the rear of the machine.

**Capacity:** 45 kg (100 lb)

1. Loosen the “T” handle by rotating it clockwise (Figure 19).

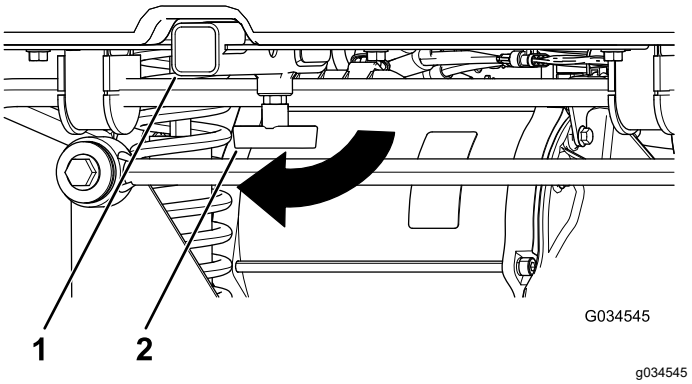


**Figure 19**

1. Receiver
2. “T” handle

2. Insert your accessory into the receiver until the holes align (Figure 19).
3. Secure the assembled accessory to the receiver tube using the clevis pin and hairpin cotter supplied with the accessory.
4. Tighten the “T” handle by rotating it counterclockwise (Figure 20).

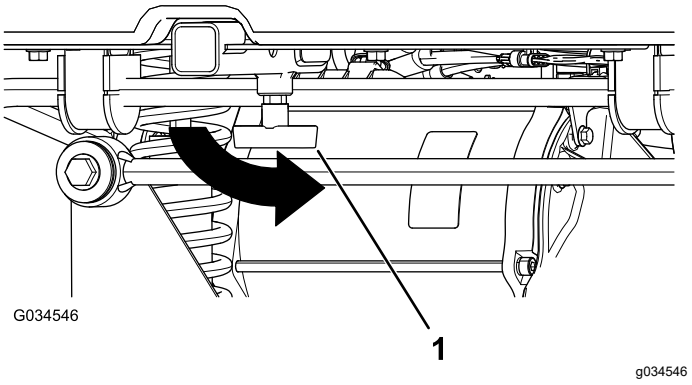


**Figure 20**

1. “T” handle

# Stopping the Machine

***Important:*** **When stopping the machine on an incline, use the service brakes to stop the machine and engage the parking brake to hold the machine in place. Using the accelerator to stall the machine on the hill can overheat the motor or drain the batteries.**

1. Remove your foot from the accelerator pedal.
2. Slowly press the brake pedal to apply the service brakes until the machine comes to a complete stop.

   **Note:** The stopping distance may vary depending on the machine load and speed.

# Loading the Cargo Bed

Use the following guidelines when loading the cargo bed and operating the machine:

- Observe the weight capacity of the machine and limit the weight of the load that you carry in the cargo bed as described in Specifications (page 15) and on the gross vehicle weight tag of the machine.

  **Note:** The load rating is specified for machine operation on a level surface only.
- Reduce the weight of the load that you carry in the cargo bed when operating the machine on hills and rough terrain.
- Reduce the weight of the load that you carry when the materials are tall (and have a high center of gravity), such as a stack of bricks, landscaping timbers, or fertilizer bags. Distribute the load as low as possible to ensure that the load does not reduce your ability to see behind the machine when operating it.
- Keep loads centered by loading the cargo bed as follows:
  - Evenly position the weight in the cargo bed from side to side.

    ***Important:*** **Tipping over is more likely to occur if the cargo bed is loaded to 1 side.**
  - Evenly position the weight in the cargo bed from front to back.

    ***Important:*** **Loss of steering control or the machine may tip over if you position the load behind the rear axle and the traction on the front tires is reduced.**
- Use extra caution when transporting oversized loads in the cargo bed, particularly when you cannot center the weight of the oversize load to the cargo bed.
- Whenever possible, secure the load by binding it to the cargo bed so that it does not shift.
- When transporting liquids, use caution when driving the machine uphill or downhill, when suddenly changing speed or stopping, or when driving over rough surfaces.

The capacity of the cargo bed is 0.28 $m^3$ (10 $ft^3$). The amount (volume) of material that you can place in the bed without exceeding the load ratings of the machine can vary greatly depending on the density of the material.

Refer to the following table for load volume limits with various materials:

| **Material** | **Density** | **Maximum Cargo Bed Capacity** (on level ground) |
|---|---|---|
| Gravel, dry | 1522 kg/$m^3$ (95 lb/$ft^3$) | Full |
| Gravel, wet | 1922 kg/$m^3$ (120 lb/$ft^3$) | 3/4 Full |
| Sand, dry | 1442 kg/$m^3$ (90 lb/$ft^3$) | Full |
| Sand, wet | 1922 kg/$m^3$ (120 lb/$ft^3$) | 3/4 Full |
| Wood | 721 kg/$m^3$ (45 lb/$ft^3$) | Full |
| Bark | <721 kg/$m^3$ (<45 lb/$ft^3$) | Full |
| Earth, packed | 1602 kg/$m^3$ (100 lb/$ft^3$) | 3/4 Full (approximately) |

# *After Operation*

## After Operation Safety

### General Safety

- Before you leave the operating position, do the following:
  - Park the machine on a level surface.
  - Move the direction selector to the NEUTRAL position.
  - Engage the parking brake.
  - Shut off the machine and remove the key.
  - Wait for all movement to stop.
- Allow the machine to cool before adjusting, servicing, cleaning, or storing it.
- Do not store the machine where there is an open flame, spark, or pilot light, such as on a water heater or other appliance.
- Keep all parts of the machine in good working condition and all hardware tightened.
- Maintain and clean the seat belt(s) as necessary.
- Replace all worn, damaged, or missing decals.

## Hauling the Machine

- Use care when loading or unloading the machine into a trailer or a truck.
- Use full-width ramps for loading the machine into a trailer or a truck.
- Tie the machine down securely.

Refer to Figure 21 and Figure 22 for the tie-down locations on the machine.

**Note:** Load the machine on the trailer with the front of the machine facing forward. If that is not possible, secure the machine hood to the frame with a strap, or remove the hood and transport and secure it separately or the hood may blow off during transport.

**⚠ CAUTION**

**Loose seats may fall off the machine and trailer when transporting the machine, and the seats may land on another machine or obstruct the roadway.**

**Remove the seats or ensure that the seats are secured by the pivot pins.**

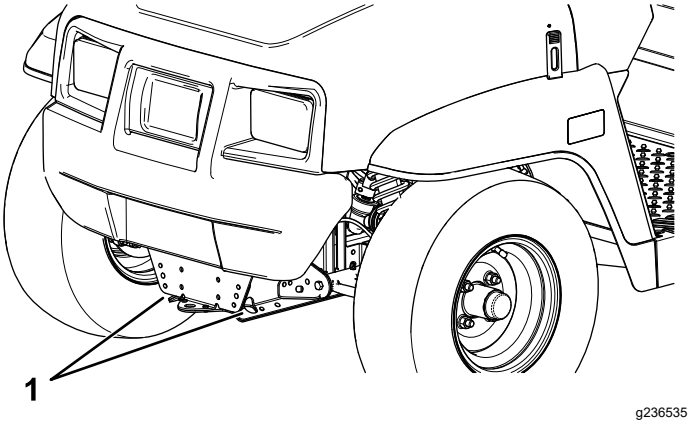


**Figure 21**

1. Towing tongue and tie-down point (front of the machine)

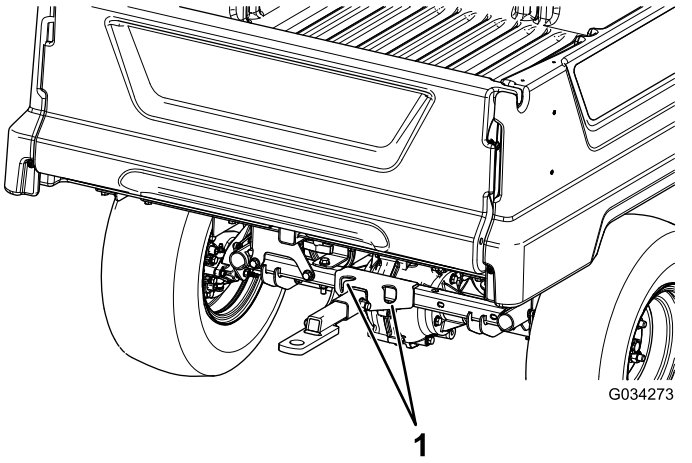


**Figure 22**

1. Rear tie-down points

# Towing the Machine

In case of an emergency, you can tow the machine for a short distance; however, this should not be a standard operating procedure.

**⚠ WARNING**

**Towing at excessive speeds could cause a loss of steering control, resulting in personal injury.**

**Never tow the machine at faster than 8 km/h (5 mph).**

Towing the machine is a 2-person job. If you must move the machine a considerable distance, transport it on a truck or trailer; refer to Towing a Trailer (page 25).

1. Shut off the machine and remove the key.

   ***Important:*** **If you tow the machine with the key in the ON position, the electrical system may be damaged.**

2. Affix a tow line to the tongue at the front of the machine's frame (Figure 21).
3. Disengage the parking brake.

# Towing a Trailer

The machine is capable of pulling trailers. Tow hitches are available for the machine, contact your authorized Toro distibutor for details.

When hauling cargo or towing a trailer, do not overload your machine or trailer. Overloading either the machine or the trailer can cause poor performance or damage to the brakes, axle, motor, transaxle, steering, suspension, body structure, or tires.

Always load a trailer with 60% of the cargo weight in the front of the trailer. This places approximately 10% of the gross trailer weight (GTW) on the tow hitch of the machine.

To provide adequate braking and traction, always load the cargo bed when using a trailer. Do not exceed the GTW or GVW limits.

Avoid parking a machine with a trailer on a hill. If you must park on a hill, engage the parking brake and block the tires of the trailer.

# Maintenance

## Maintenance Safety

- Do not allow untrained personnel to service the machine.
- Before you leave the operating position, do the following:
  - Park the machine on a level surface.
  - Move the direction selector to the NEUTRAL position.
  - Engage the parking brake.
  - Shut off the machine and remove the key.
  - Wait for all movement to stop.
- Allow the machine to cool before adjusting, servicing, cleaning, or storing it.
- Support the machine with jack stands whenever you work under the machine.
- Do not work under a raised bed without the proper bed safety support in place.
- Do not charge the batteries while servicing the machine.
- To ensure that the entire machine is in good condition, keep all hardware properly tightened.
- To reduce the potential fire hazard, keep the machine area free of excessive grease, grass, leaves, and accumulation of dirt.
- If possible, do not perform maintenance while the machine is running. Keep away from moving parts.
- If you must run the machine to perform a maintenance adjustment, keep your hands, feet, clothing, and any parts of the body away from any moving parts. Keep bystanders away from the machine.
- Check the parking brake operation as recommended in the maintenance schedule and adjust and service it as required.
- Keep all parts of the machine in good working condition and all the hardware properly tightened. Replace all worn or damaged decals.
- Never interfere with the intended function of a safety device or reduce the protection provided by a safety device.
- If major repairs are ever necessary or assistance is required, contact an authorized Toro distributor.
- Altering this machine in any manner may affect the operation of the machine, performance, durability, or its use may result in injury or death. Such use could void the product warranty of The Toro® Company.

## Recommended Maintenance Schedule(s)

| Maintenance Service Interval | Maintenance Procedure |
|---|---|
| After the first 100 hours | • Perform the breaking in a new machine guidelines. |
| Before each use or daily | • Inspect the seat belt(s) for wear, cuts, and other damage. Replace the seat belt(s) if any component does not operate properly.<br>• Check the tire pressure.<br>• Charge the batteries.<br>• Check the water level of the batteries.<br>• Check the brake-fluid level.<br>• Wash the machine. |
| Every 25 hours | • Clean the batteries.<br>• Check the water level of the batteries and add distilled or deionized water to the batteries (if necessary). |
| Every 100 hours | • Check the condition of the tires and rims.<br>• Torque the wheel-lug nuts.<br>• Inspect the steering and suspension for loose or damaged components.<br>• Check the front wheel camber and toe-in.<br>• Check the transaxle-fluid level.<br>• Check the transaxle for leaks.<br>• Inspect the brakes. |
| Every 300 hours | • Grease the front wheel bearings. |
| Every 400 hours | • Replace the service and parking-brake pads. |

| Maintenance Service Interval | Maintenance Procedure |
|---|---|
| Every 800 hours | • Change the transaxle fluid. |
| Every 1,000 hours | • Change the brake fluid. |

**Note:** Download a free copy of the electrical schematic by visiting www.Toro.com and searching for your machine from the Manuals link on the home page.

**⚠ WARNING**

**Failure to properly maintain the machine could result in premature failure of machine systems, causing possible harm to you or bystanders.**

**Keep the machine well maintained and in good working order as indicated in these instructions.**

# Daily Maintenance Checklist

Duplicate this page for routine use.

| Maintenance Check Item | For the week of: | | | | | | |
|---|---|---|---|---|---|---|---|
| | Monday | Tuesday | Wednesday | Thursday | Friday | Saturday | Sunday |
| Check the brake and parking brake operation. | | | | | | | |
| Check the gear shift/neutral operation. | | | | | | | |
| Check the water level of the batteries. | | | | | | | |
| Check the brake-fluid level. | | | | | | | |
| Check for unusual operating noises. | | | | | | | |
| Check the tire pressure. | | | | | | | |
| Check for fluid leaks. | | | | | | | |
| Check the instrument operation. | | | | | | | |
| Check the accelerator operation. | | | | | | | |
| Touch up any damaged paint. | | | | | | | |
| Wash the machine. | | | | | | | |

# Maintaining the Machine under Special Operating Conditions

***Important:*** **If the machine is subjected to any of the conditions listed below, perform maintenance twice as frequently:**

- Desert operation
- Cold climate operation—below 10°C (50°F)
- Trailer towing
- Frequent operation in dusty conditions
- Construction work
- After extended operation in mud, sand, water, or similar dirty conditions, do the following:
  - Have your brakes inspected and cleaned as soon as possible. This prevents any abrasive material from causing excessive wear.
  - Wash the machine using water alone or with a mild detergent.

    ***Important:*** **Do not use brackish or reclaimed water to clean the machine.**

# *Pre-Maintenance Procedures*

Many of the subjects covered in this maintenance section require raising and lowering the bed. To prevent serious injury or death, take the following precautions.

**⚠ WARNING**

**Raise the cargo bed before performing maintenance. A raised cargo bed can fall and injure persons that are underneath it.**

- **Always use the prop rod to hold the cargo bed up before working underneath it.**
- **Remove any load material from the cargo bed before working underneath it.**

# Preparing the Machine for Maintenance

1. Park the machine on a level surface.
2. Move the direction selector to the NEUTRAL position.
3. Engage the parking brake.
4. Shut off the machine and remove the key.
5. Empty and raise the cargo bed.

# Lifting the Machine

**⚠ DANGER**

**The machine may be unstable when using a jack. The machine could slip off the jack, injuring anyone beneath it.**

- **Do not start the machine while the machine is on a jack.**
- **Always remove the key from the key switch before getting off the machine.**
- **Block the tires when the machine is supported by lifting equipment.**
- **Use jack stands to support the machine once you have lifted it.**

***Important:*** **Whenever you run the machine for routine maintenance and/or diagnostics, ensure that the rear wheels of the machine are 25 mm (1 inch) off the ground, with the rear axle supported on jack stands.**

- The lifting point at the front of the machine is located at the front of the frame, behind the towing tongue (Figure 23).

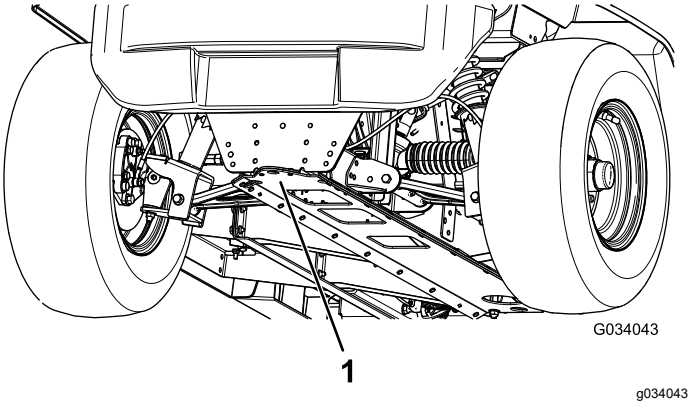


**Figure 23**

1. Front lifting point

- The lifting point at the rear of the machine is located under the axle tubes (Figure 24).

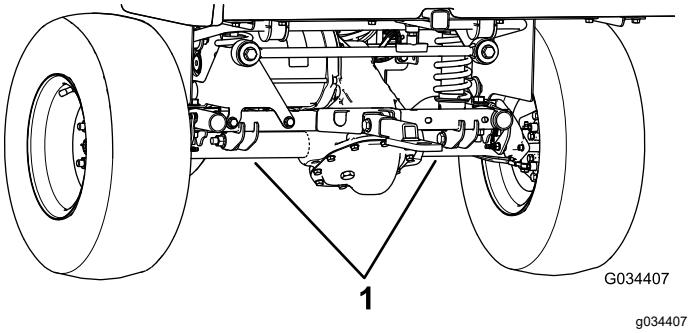


**Figure 24**

1. Rear lifting points

# Accessing the Hood

## Raising the Hood

1. Lift up the handle of the rubber latches on each side of the hood (Figure 25).

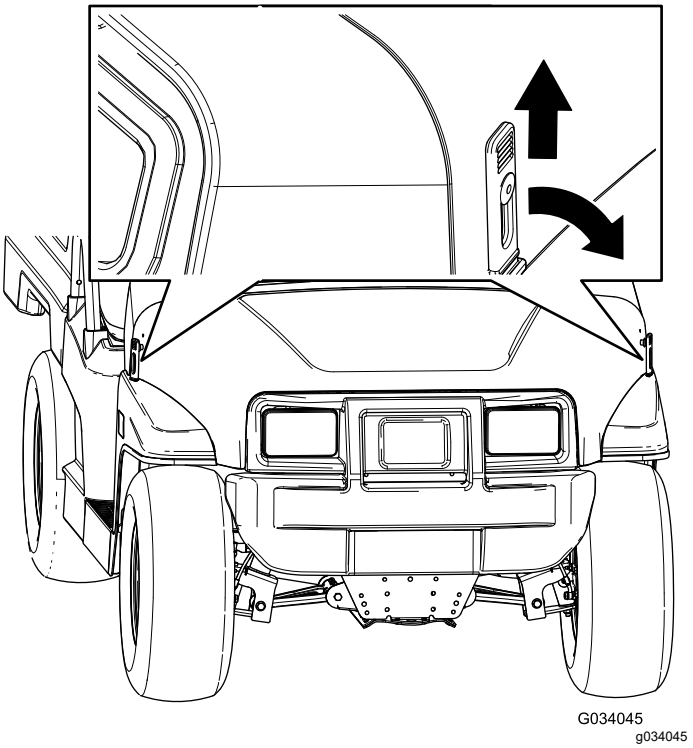


**Figure 25**

2. Raise the hood.

## Closing the Hood

1. Gently lower the hood.
2. Secure the hood by aligning the rubber latches onto the latch anchors on each side of the hood (Figure 25).

# Raising and Lowering the Seat Assembly

To raise the seat assembly, push the seat assembly forward until it rests on the steering wheel (Figure 26).

To lower the seat assembly, push the seat assembly rearward until it seats back into the original position (Figure 26).

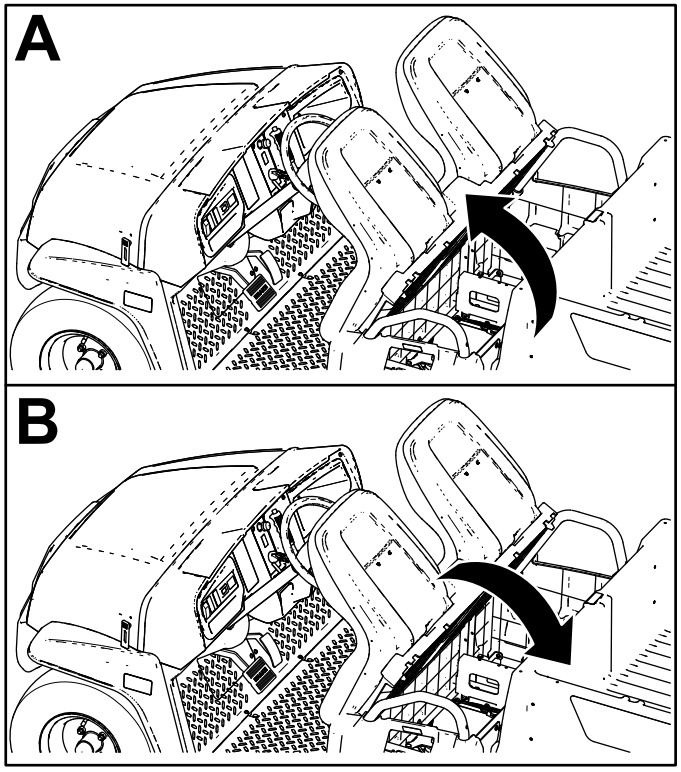


g190066

**Figure 26**

# Removing the Seat Assembly

1. Push the seat assembly forward to the raised position (Figure 26).
2. Slide the seat assembly to the side out of the pins, and lift the seat assembly upward (Figure 27).

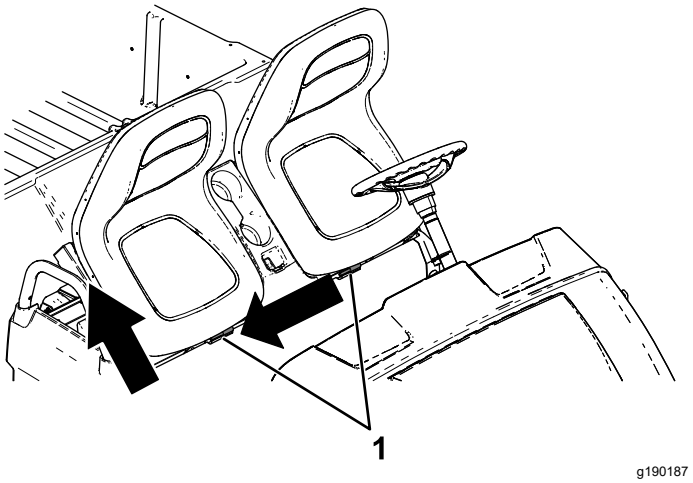


g190187

**Figure 27**

1. Pins

# Installing the Seat Assembly

Slide the seat assembly onto the pins and lower the seat assembly (Figure 28).

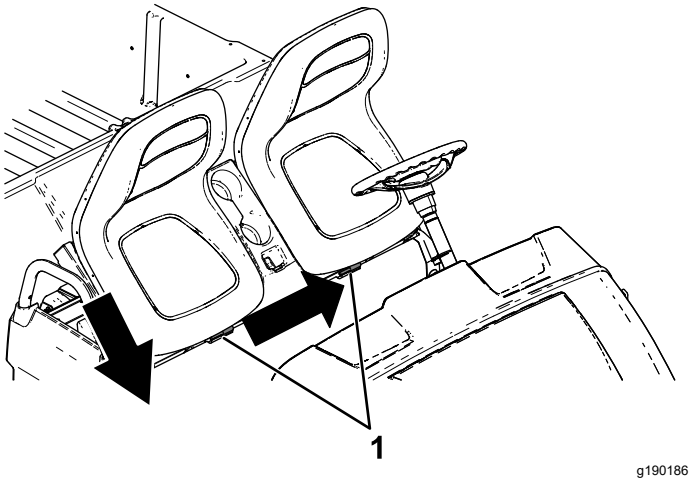


g190186

**Figure 28**

1. Pins

# Lubrication

## Greasing the Front Wheel Bearings

**Service Interval:** Every 300 hours

**Grease specification:** Mobilgrease XHP™-222

## Removing the Hub and Rotor

1. Lift the front of the machine and support it with jack stands.
2. Remove the 4 lug nuts that secure the wheel to the hub (Figure 29).

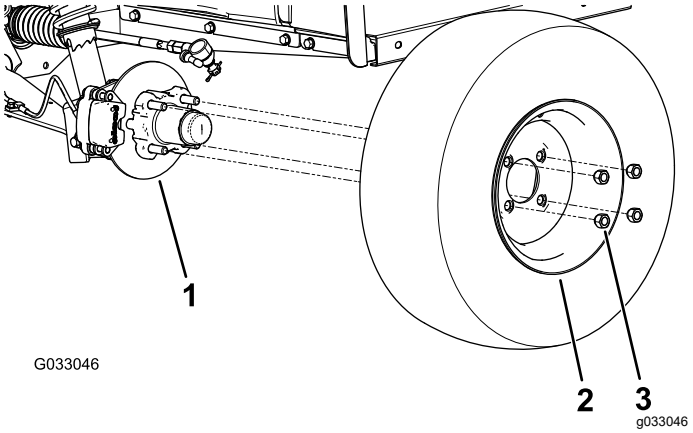


**Figure 29**

1. Hub
2. Wheel
3. Lug nut

3. Remove the flange-head bolts (3/8 x 3/4 inch) that secure the bracket for the brake assembly to the spindle and separate the brake from the spindle (Figure 30).

   **Note:** Support the brake assembly before proceeding to the next step.

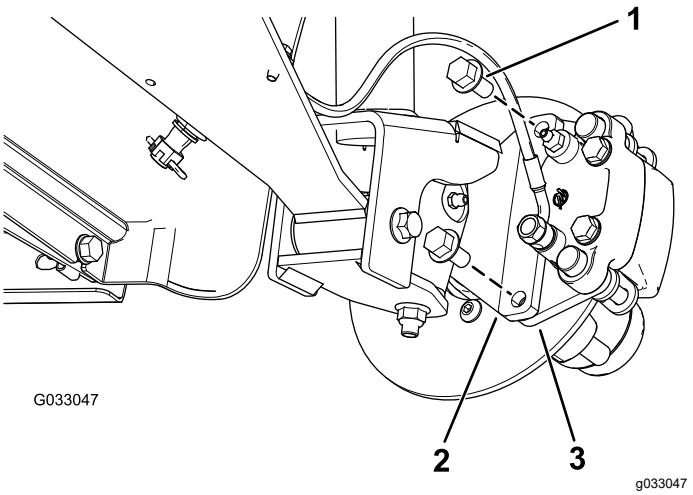


**Figure 30**

1. Flange-head bolts (3/8 x 3/4 inch)
2. Spindle
3. Caliper bracket (brake assembly)

4. Remove the dust cap from the hub (Figure 31).

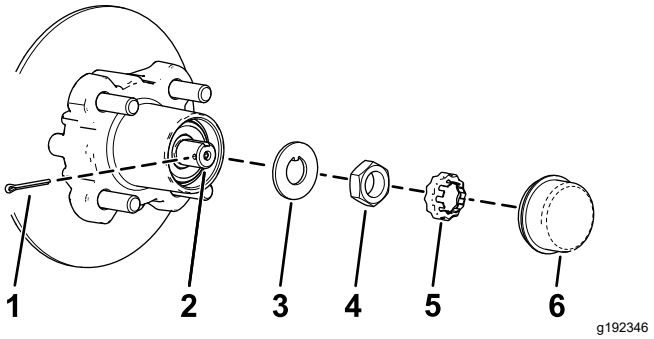


**Figure 31**

1. Cotter pin
2. Spindle
3. Tab washer
4. Spindle nut
5. Nut retainer
6. Dust cap

5. Remove the cotter pin and nut retainer from the spindle and spindle nut (Figure 31).
6. Remove the spindle nut from the spindle, and separate the hub and rotor assembly from the spindle (Figure 31 and Figure 32).

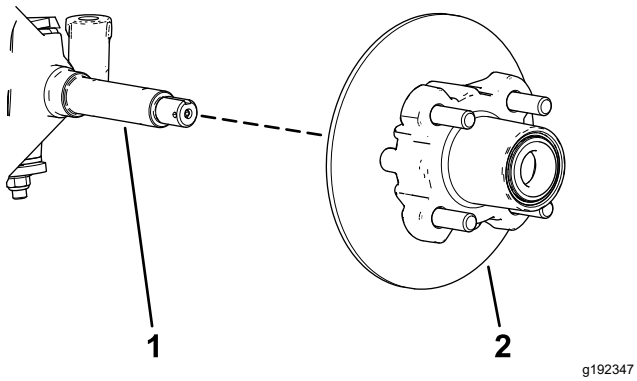


**Figure 32**

1. Spindle
2. Hub and rotor assembly

7. Wipe clean the spindle with a rag.
8. Repeat steps 1 through 7 to the hub and rotor at the other side of the machine.

# Greasing the Wheel Bearings

1. Remove the outboard bearing and bearing race from the hub (Figure 33).

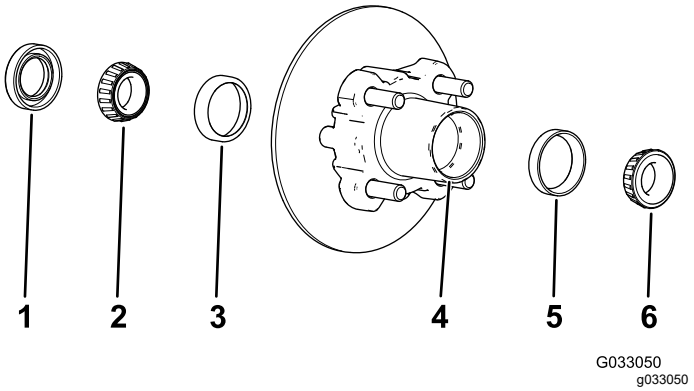


**Figure 33**

1. Seal
2. Inboard bearing
3. Inboard-bearing race
4. Bearing cavity (hub)
5. Outboard-bearing race
6. Outboard bearing

2. Remove the seal, inboard bearing from the hub (Figure 33).
3. Wipe clean the seal and check for wear and damage.

   **Note:** Do not use cleaning solvent to clean the seal. Replace the seal if it is worn or damaged.
4. Clean the bearings and races, and check these parts for wear and damage.

   **Note:** Replace all worn or damaged parts. Ensure that the bearings and races are clean and dry.
5. Clean the cavity of the hub of all grease, dirt, and debris (Figure 33).
6. Pack the bearings with the specified grease.
7. Fill the cavity of hub 50 to 80% full of the specified grease (Figure 33).
8. Assemble the inboard bearing onto the race at the inboard side of the hub and install the seal (Figure 33).
9. Repeat steps 1 through 8 to the bearings for the other hub.

# Installing the Hub and Rotor

1. Apply a light coat of the specified grease to the spindle (Figure 34).

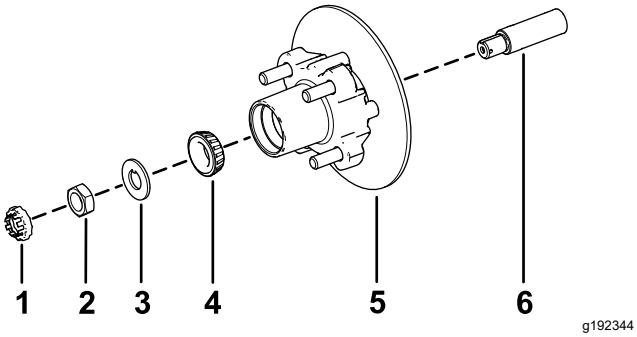


**Figure 34**

1. Nut retainer
2. Spindle nut
3. Tab washer
4. Outer bearing
5. Hub, rotor, inner bearing, race, and seal
6. Spindle

2. Assemble the hub and rotor onto the spindle with the rotor inboard (Figure 34).
3. Assemble the outboard bearing onto the spindle and seat the bearing to the outboard race (Figure 34).
4. Assemble the tab washer onto the spindle (Figure 34).
5. Thread the spindle nut onto the spindle and tighten the nut to 15 N·m (11 ft-lb), while rotating the hub to seat the bearing (Figure 34).
6. Loosen the spindle nut until the hub rotates freely.
7. Torque the spindle nut to 170 to 225 N·cm (15 to 20 in-lb).
8. Install the retainer over the nut and check the alignment of the slot in the retainer and the hole in the spindle for the cotter pin (Figure 35).

   **Note:** If the slot in the retainer and the hole in the spindle are not aligned, tighten the spindle nut to align the slot and hole to a maximum torque of 226 N·cm (20 in-lb) on the nut.

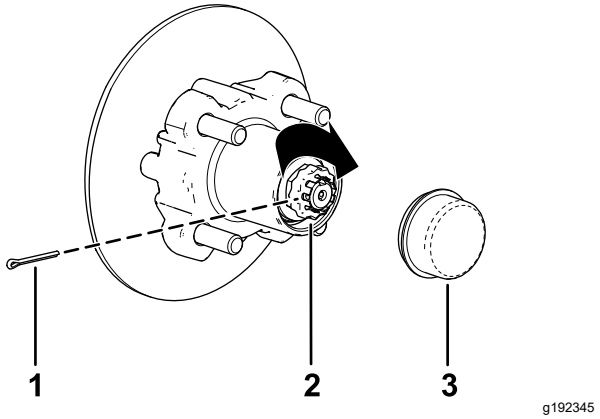


**Figure 35**

1. Cotter pin
2. Nut retainer
3. Dust cap

9. Install the cotter pin and bend each legs around the retainer (Figure 35).
10. Install the dust cap onto the hub (Figure 35).
11. Repeat steps 1 through 10 for the hub and rotor at the other side of the machine.

# Installing the Brakes and Wheels

1. Clean the 2 flange-head bolts (3/8 x 3/4 inch) and apply a coat of medium-strength thread-locking compound to the threads of the bolts.
2. Align the brake pads to either side of the rotor (Figure 30) and the holes in the caliper bracket with the holes in the brake mount of the spindle frame (Figure 34).
3. Secure the caliper bracket to the spindle frame (Figure 30) using the 2 flange-head bolts (3/8 x 3/4 inch).

   Torque the 2 flange-head bolts to 47 to 54 N·m (35 to 40 ft-lb).
4. Align the holes in the wheel to the studs of the hub and assemble the wheel to the hub with the valve stem outward (Figure 29).

   **Note:** Ensure that the mounting surface of the wheel is flush with the hub.
5. Secure the wheel to the hub using the lug nuts (Figure 29).

   Torque the lug nuts to 108 to 122 N·m (80 to 90 ft-lb).
6. Repeat steps 1 through 5 for the brake and wheel on the other side of the machine.

# *Electrical System Maintenance*

## Electrical System Safety

- Disconnect the battery before repairing the machine. Disconnect the negative terminal first and the positive last. Connect the positive terminal first and the negative last.
- Charge the battery in an open, well-ventilated area, away from sparks and flames. Unplug the charger before connecting or disconnecting the battery. Wear protective clothing and use insulated tools.

## Battery Safety

- To reduce the potential for fire, keep the batteries and motor area free of excessive grease, grass, leaves, and accumulation of dirt.
- Remove all jewelry and watches before servicing the batteries.
- Do not charge the batteries while servicing the machine.
- Always disconnect all the battery cables before servicing any electrical components; refer to Disconnecting the Batteries (page 38).

  **Note:** Disconnecting all the battery cables isolates power from the electrical system.
- Battery electrolyte contains sulfuric acid, which produces hydrogen, a gas that is explosive in certain conditions. Sulfuric acid can burn skin and damage clothing; when emitted in gas form, it can damage your lungs.
  - Always service, store, and charge the machine in a well-ventilated area.
  - Keep sparks and open flames away from the batteries.
  - Do not smoke near the batteries.
  - Do not use an open flame to check the level or leakage of battery electrolyte.
  - Wear proper eye, hand, and face protection.
  - Do not lean over the batteries at any time.
  - Avoid breathing in battery fumes.
  - Fill the batteries where clean water is always available for flushing the skin.
  - If you get electrolyte on your skin or eyes, flush the affected area for 20 minutes with clean water. Remove affected clothing. Seek medical attention immediately.
  - Keep children and pets away from the batteries and electrolyte.
- Electrolyte is poisonous.
  - Do not drink the electrolyte.
  - If electrolyte has been swallowed, have them drink large quantities of water immediately to dilute the electrolyte, if possible.
  - Do not attempt to make them vomit.
  - Call a poison control center and get medical attention immediately.
- When not filling the batteries, keep the battery vent caps tight on the batteries. Do not operate the machine if any of the vent caps are missing or damaged.
- When removing or installing the batteries, do not allow the battery terminals to touch any metal parts of the machine.
- Do not allow metal tools to short between the battery terminals and metal parts of the machine.
- Do not check a battery charge by placing a metal object across the posts. This causes sparks, which can cause an explosion.
- Always keep the battery retainers in place to protect and secure the batteries.
- Read and understand the charging instructions before charging the batteries; refer to Charging the Batteries (page 35). Also, take the following precautions when charging the batteries:
  - Turn the machine key switch to OFF before connecting the charger to a power source.
  - Use only the battery charger supplied with the machine to charge the batteries.
  - Do not charge a damaged or frozen battery.
  - Always unplug the AC power cord from the power outlet before unplugging it from the machine charging receptacle to avoid sparks.
  - If a battery gets hot while charging, begins emitting large amounts of gasses, or spews electrolyte, immediately disconnect the charger power cord from the power outlet. Have the machine serviced by an Authorized Service Dealer before using it again.

# Maintaining the Batteries

Raise the seat assembly and raise the cargo bed before maintaining the batteries; refer to Raising and Lowering the Seat Assembly (page 30) and Raising the Cargo Bed to the Dump Position (page 20).

**⚠ WARNING**

**Battery terminals or metal tools could short against metal components causing sparks. Sparks can cause the battery gases to explode, resulting in personal injury.**

- **When removing or installing the battery, do not allow the battery terminals to touch any metal parts of the machine.**
- **Do not allow metal tools to short between the battery terminals and metal parts of the machine.**
- **Use insulated tools when maintaining the batteries.**
- **Always keep the battery retainers in place to protect and secure the batteries.**

**⚠ DANGER**

**Do not touch any electrical components or contacts on the motor.**

**Touching any of these components or contacts could seriously injure you or cause death.**

## Cleaning the Batteries

**Service Interval:** Every 25 hours

1. Ensure that all the battery caps are tight.
2. Use a paper towel to clean the batteries.
3. If the battery terminals are corroded, clean them with a solution of 4 parts water and 1 part baking soda. Also, clean the posts and cable clamps with a post and clamp cleaner.

   **Note:** The posts and clamps should have a bright, metallic shine.
4. Apply a light coating of Toro battery-terminal protector.

## Charging the Batteries

**Service Interval:** Before each use or daily

The charger for this machine is located inside the machine under the operator's seat. For maximum battery life, charge the batteries whenever you are not using the machine. Depending on how discharged the batteries are and the ambient temperature of the batteries, it may take up to 16 hours to charge the batteries to full capacity.

**Note:** Normal charge time is approximately 8 to 10 hours.

***Important:*** **Lead-acid batteries do not develop a charge memory and do not need to be fully discharged before charging them. *Fully discharging the batteries may damage them.* Charge the batteries any time the machine is not in use.**

**⚠ WARNING**

**Charging the battery produces gases that can explode.**

**Never smoke near the batteries and keep sparks and flames away from them.**

1. Position the machine in a well-ventilated area near a suitable power outlet.
2. Check the electrolyte level of the batteries.

   **Note: After fully charging the batteries**, fill the batteries with distilled or deionized water; refer to Adding Distilled or Deionized Water to the Batteries (page 37).

   ***Important:*** **Fully charge the batteries before adding the water to the batteries. While charging, the electrolyte increases in volume, and filling a low battery before fully charging the batteries can cause the electrolyte to overflow and leak out of the vent.**

3. Connect a **16 gauge (or larger diameter), 2.5 m (8.2 ft) or shorter charger cord** to the charging receptacle on the machine (Figure 36).

   **Note:** Ensure that the charger-voltage setting matches the voltage at the power outlet being used.

   **Note:** In high-ambient temperature environments, remove the seat assembly for optimal charging time; refer to Removing the Seat Assembly (page 30). If the battery charger is too hot, it may not charge properly. In cold temperatures, it may take a longer for the batteries to charge.

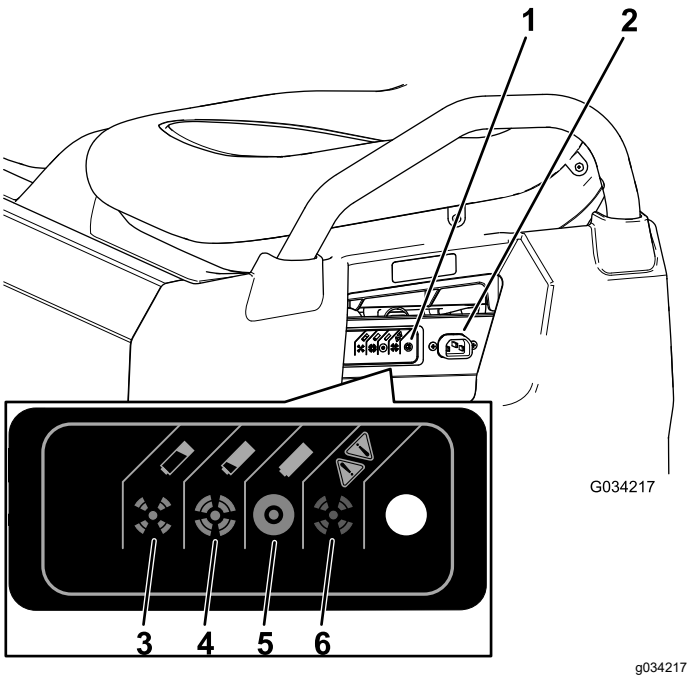


**Figure 36**

1. Charger-status light
2. Charging receptacle
3. The battery is near empty.
4. The battery is almost charged.
5. The battery is charged.
6. Charger fault; refer to the charger manual for the fault codes.

4. Plug the charger power cord into the power outlet.

   **Note:** While the batteries are charging, the green light on the charger blinks on and off. When the batteries are fully charged, the green light stops blinking and stays on.

5. Disconnect the cord from the power outlet.
6. Disconnect the charger from the machine.

Refer to the following table and Figure 36 for information on the meanings of the varying colors of the charger-status light.

### Charger-Status Light Table

| Charger-Status Light Color | Solid/Flashing | Meaning |
|---|---|---|
| Green | Solid | Charging complete |
| Green | Flashing | Short flash—less than 80% charge Long flash—greater than 80% charge |
| Amber | Flashing | Reduced-power mode—low AC voltage or high internal charger temperature; charge immediately |
| Red | Flashing | Charger error—reset the charger power If this error persists, refer to the blink codes in the charger manual |

## Checking the Water Level of the Batteries

**Service Interval:** Before each use or daily

1. Park the machine on a level surface, engage the parking brake, shut off the machine, remove the key, and raise cargo bed; Raising the Cargo Bed to the Dump Position (page 20).
2. Raise the seat assembly to access the batteries; refer to Raising and Lowering the Seat Assembly (page 30).
3. Check the eyelets on each of the batteries to see if they are either black or white (Figure 37).

   **Note:** Black eyelets indicate that the batteries are full of water. White eyelets indicate that water is needed for the batteries.

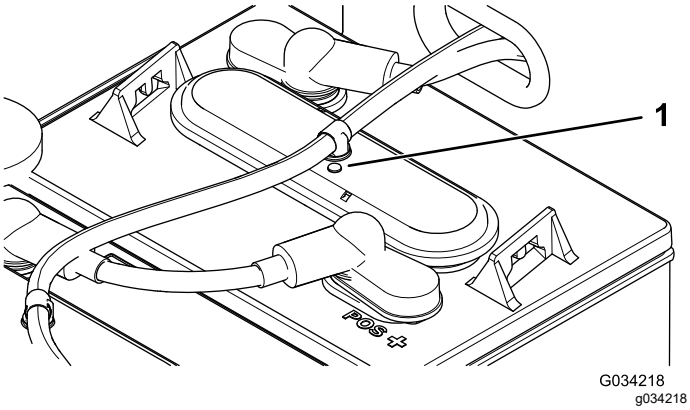


**Figure 37**

1. Battery eyelet

4. If the eyelets are white, you must add distilled or deionized water to the batteries; refer to Adding Distilled or Deionized Water to the Batteries (page 37).

## Adding Distilled or Deionized Water to the Batteries

**Service Interval:** Every 25 hours/Every 2 weeks (whichever comes first)

***Important:*** **Fully charge the batteries before adding the water to the batteries. While charging, the electrolyte increases in volume, and filling a low battery before fully charging the batteries can cause the electrolyte to overflow and leak out of the vent.**

***Important:*** **Use only clean, distilled or deionized water to fill the batteries. Using tap water may damage and reduce the life of the batteries.**

1. Park the machine on a level surface, engage the parking brake, shut off the machine, remove the key, and raise cargo bed; Raising the Cargo Bed to the Dump Position (page 20).
2. Charge the batteries until a full charge is achieved; refer to Charging the Batteries (page 35).
3. Raise the seat assembly to access the batteries; refer to Raising and Lowering the Seat Assembly (page 30).
4. Connect your Toro water hand pump to the water-fill port (Figure 38).

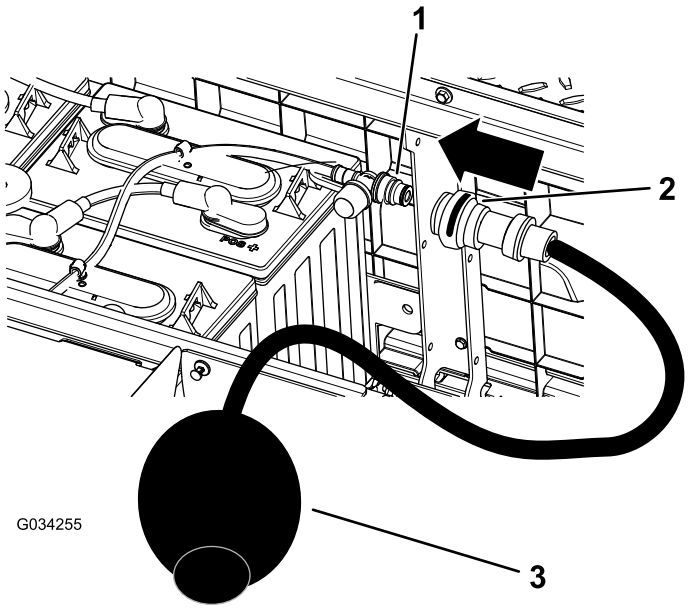


**Figure 38**

1. Water-fill port
2. Hand-pump connector
3. Water hand pump

5. Pump water into the batteries until all the eyelets on top of the batteries are black, indicating that they are filled with water.

   ***Important:*** **Do not overfill the battery. Electrolyte will overflow onto other parts of the machine and severe corrosion and deterioration may result. Also, overfilling the battery may reduce the life of the battery.**

## Changing the Batteries

When the machine begins to lose operating range or when the length of time to discharge or charge the battery is significantly reduced, the batteries are probably wearing and losing their ability to hold a charge. Take the machine to an Authorized Service Dealer and have them test the batteries to determine whether the batteries need to be replaced. The dealer can then replace the batteries for you. If you wish to replace the batteries yourself, use the following procedures:

### Disconnecting the Batteries

1. Raise the cargo bed, turn the key switch to the OFF position, and remove the key.
2. Disconnect the main negative-battery cable (black) that connects the bank of batteries to the ground point of the machine (Figure 39).

   **Note:** The main battery cables are long when compared to battery-interconnect cables.

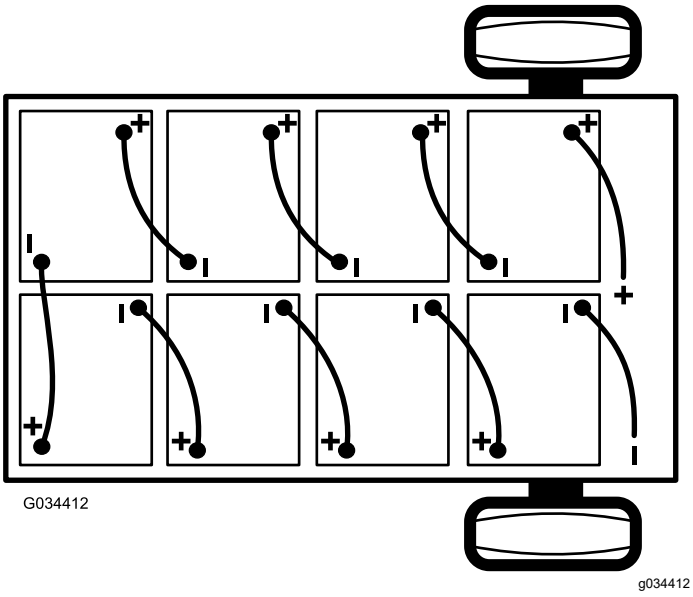


**Figure 39**

3. Disconnect the main positive-battery cable (red) that connects the bank of batteries to the main contactor of the machine (Figure 39).

### Replacing the Batteries

1. Remove all of the battery-interconnect cables from the batteries.
2. Remove the battery retainers located between the batteries.
3. Remove all of the batteries and recycle them according to your local codes.
4. Assemble new batteries into the machine at the locations from where you removed batteries in step 3.

   **Note:** Pay attention to the battery polarity when installing the new batteries (Figure 39).
5. Install the battery retainers and tighten the nuts until the retainer securely grips the batteries.
6. Connect the batteries together as shown in Figure 39 with the battery-interconnect cables that you removed in step 1.

### Connecting the Batteries

1. Ensure that the battery terminals are clean and free of oxidation.
2. Connect the main positive-battery cable (red) between the bank of batteries and the machine (Figure 39).
3. Connect the main negative-battery cable (black) between the bank of batteries and the machine (Figure 39).
4. Torque the nuts securing all of the battery cables until the retainer securely grips the battery.
5. Coat the battery terminals with Toro battery-terminal protector.
6. Ensure that the rubber boots on each battery cable are securely seated over the battery terminals.
7. Insert the key into the key switch and rotate the switch to the ON position.
8. Lower the cargo bed, rotate the key switch to the OFF position, and remove the key.

## Storing the Batteries

Charge the batteries fully before placing the machine into storage. Plug the charger into a wall outlet while the machine and batteries are in storage. Leave the charger plugged into a wall outlet and charging receptacle during storage to ensure that the batteries stay charged and do not freeze; otherwise, charge the batteries at least once a month.

***Important:*** **If the machine cannot be plugged in during storage, fully charge the batteries at least once a month. The batteries self-discharge over long periods of time, which may damage the batteries to the point of being unusable, even if the batteries are new.**

# Replacing the Fuses

There are 4 fuses in the electrical system; the other slots are open for options. They are located under the seat assembly behind a battery on the right side of the machine (Figure 40).

| | |
|---|---|
| Main power | 10 A |
| Electric relay | 20 A |
| USB power point | 5 A |
| Headlights | 10 A |
| Optional lift kit—open | 15 A |
| Horn | 30 A |

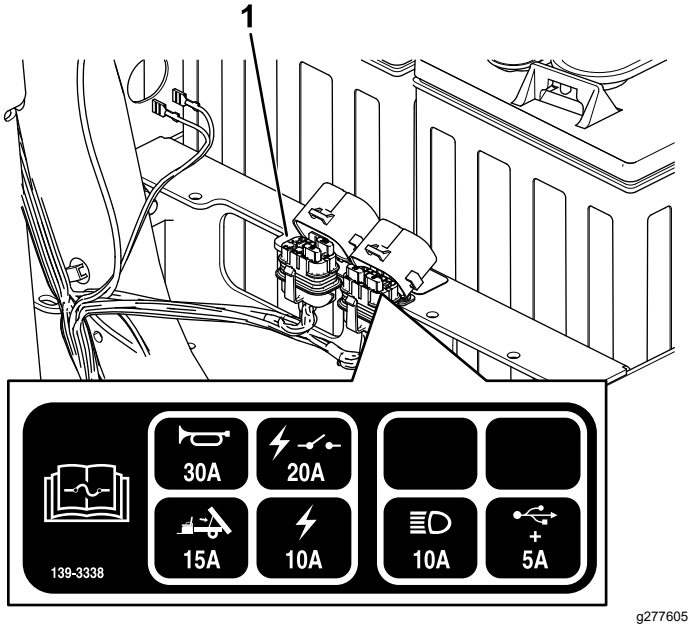


**Figure 40**

1. Fuse block

# Maintaining the Headlights

## Replacing the Headlight

1. Disconnect the batteries; refer to Disconnecting the Batteries (page 38).
2. Open the hood.
3. Disconnect the electrical connector for the harness from the connector of the lamp assembly (Figure 41).

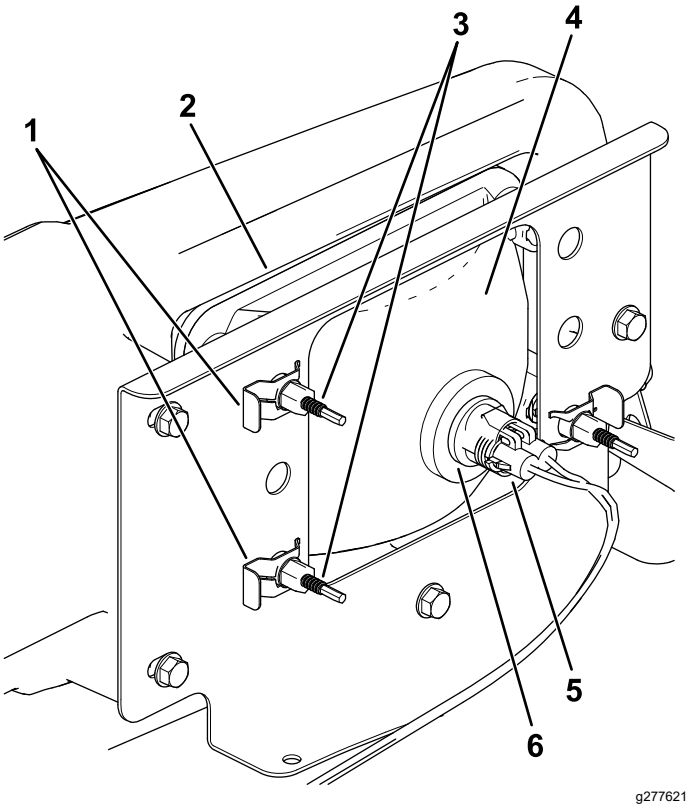


**Figure 41**

1. Speed clip
2. Opening in the bumper
3. Adjustment screw
4. Headlight
5. Harness electrical connector
6. Lamp assembly

4. Remove the speed clips that secure the headlight to the headlight bracket (Figure 41).

   **Note:** Retain all parts for installation of the new headlight.
5. Remove the headlight assembly by moving it forward through the opening in the front bumper (Figure 41).
6. Install the new headlight through the opening in the bumper (Figure 41).

   **Note:** Ensure the adjustment posts are lined up with the holes in the mounting bracket behind the bumper.
7. Secure the headlight assembly with the speed clips that you removed in step 4.
8. Connect the electrical connector for the harness to the connector of the lamp assembly (Figure 41).
9. Adjust the headlights to direct the beams to the desired position, refer to Adjusting the Headlights (page 40).

## Adjusting the Headlights

Use the following procedure to adjust the headlight beam position whenever a headlight assembly is replaced or removed.

1. Park the machine on a level surface with the headlights approximately 7.6 m (25 ft) from a wall (Figure 42).
2. Measure the distance from the floor to the center of the headlight and make a mark on the wall at the same height.
3. Turn the key switch to the ON position, and turn on the headlights.
4. Take note of where the headlights aim on the wall.

   The brightest part of the headlight beam should be 20 cm (8 inches) below the mark placed on the wall (Figure 42).

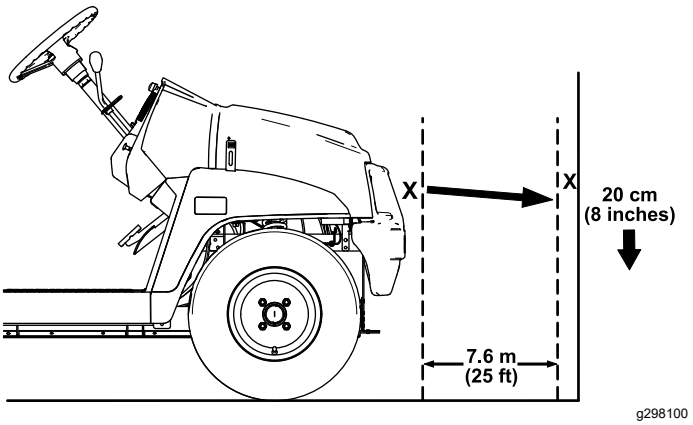


**Figure 42**

5. At the back of the headlight assembly, rotate adjustment screws (Figure 41) to pivot the headlight assembly and align the position of the cast beam.
6. Connect the batteries and close the hood; refer to Connecting the Batteries (page 38).

# *Drive System Maintenance*

## Maintaining the Tires

**Service Interval:** Every 100 hours—Check the condition of the tires and rims.

Every 100 hours—Torque the wheel-lug nuts.

1. Inspect the tires and rims for signs of wear and damage.

   **Note:** Operating accidents, such as hitting curbs, can damage a tire or rim and also disrupt wheel alignment, so inspect tire condition after an accident.
2. Torque the wheel lug nuts to 108 to 122 N·m (80 to 90 ft-lb).

# Inspecting the Steering and Suspension Components

**Service Interval:** Every 100 hours—Inspect the steering and suspension for loose or damaged components.

With the steering wheel at the centered position (Figure 43), turn the steering wheel to the left or right. If you turn the steering wheel more than 13 mm (1/2 inch) to the left or right, and the tires do not turn, check the following steering and suspension components to ensure that they are not loose or damaged:

- Steering shaft to the steering-rack assembly joint

  ***Important:*** **Inspect the condition and security of the pinion-shaft seal (Figure 44).**

- Steering-rack assembly tie rods

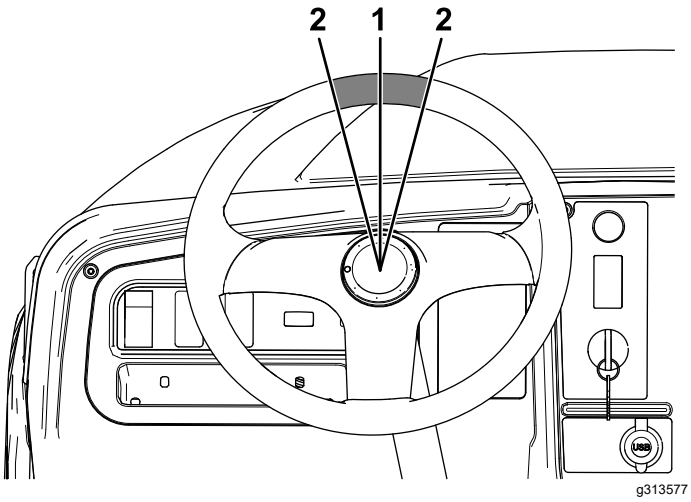


**Figure 43**

1. Steering wheel at the centered position
2. 13 mm (1/2 inch) from the center of the steering wheel

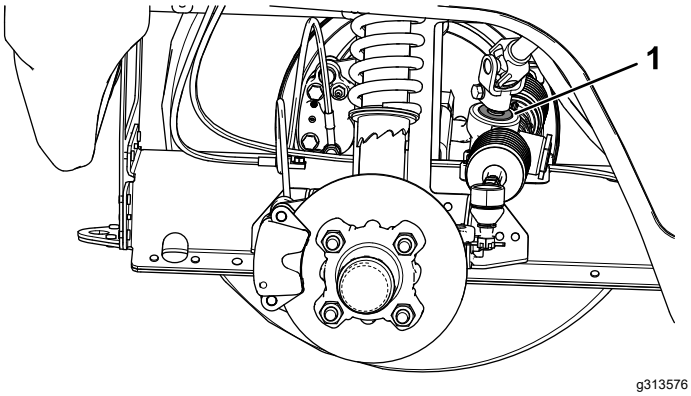


**Figure 44**

1. Pinion-shaft seal

# Adjusting the Front Wheel Alignment

**Service Interval:** Every 100 hours/Yearly (whichever comes first)—Check the front wheel camber and toe-in.

## Preparing to Adjust Camber or Toe-in

1. Check the tire pressure to ensure that the front tires are inflated to 82 kPa (12 psi).
2. Either add weight to the driver's seat equal to the average operator who will run the machine, or have an operator sit on the seat. The weight or operator must remain on the seat for the duration of the adjustment procedure.
3. On a level surface, roll the machine straight back 2 to 3 m (6 to 10 ft) and then straight forward to the original starting position. This allows the suspension to settle into the operating position.

## Adjusting the Camber

**Owner provided tools:** spanner wrench, Toro Part 132-5069; refer to your authorized Toro distributor.

***Important:*** **Make the camber adjustments only if you are using a front attachment or if there is uneven tire wear.**

1. Check the camber alignment at each wheel; the alignment should be as close to neutral (zero) as possible.

   **Note:** The tires should be aligned with the tread evenly on the ground to reduce uneven wear.

2. If the wheel camber is out of alignment, use the spanner wrench to rotate the collar on the shock absorber to align the wheel (Figure 45).

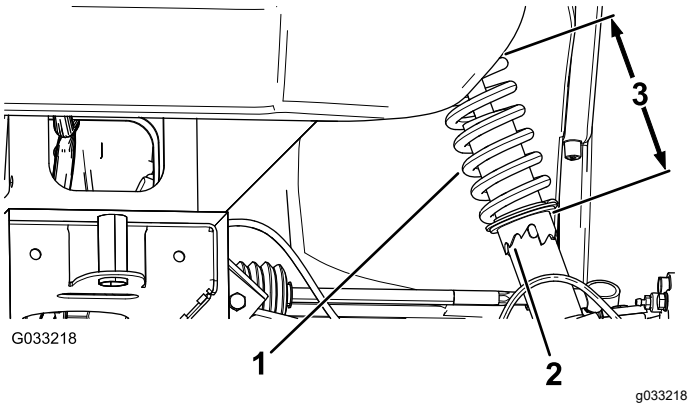


**Figure 45**

1. Shock-absorber spring
2. Collar
3. Spring length

## Adjusting the Front Wheel Toe-in

***Important:*** **Before adjusting toe-in, ensure that the camber adjustment is as close to neutral as possible; refer to Adjusting the Camber (page 41).**

1. Measure the distance between both of the front tires at the axle height at both the front and rear of the front tires (Figure 46).

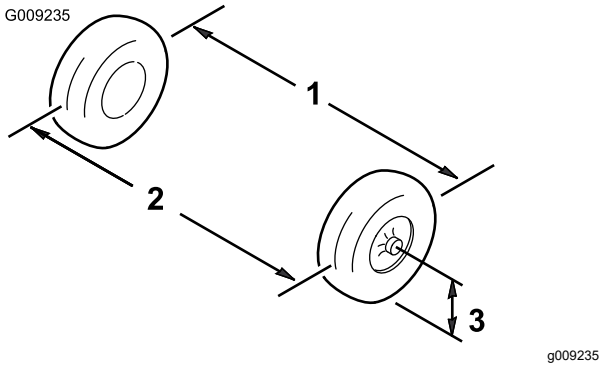


**Figure 46**

1. Tire center line—back
2. Tire center line—front
3. Axle center line

2. If the measurement does not fall within 0 to 6 mm (0 to 1/4 inch), loosen the jam nuts at the outer end of the tie rods (Figure 47).

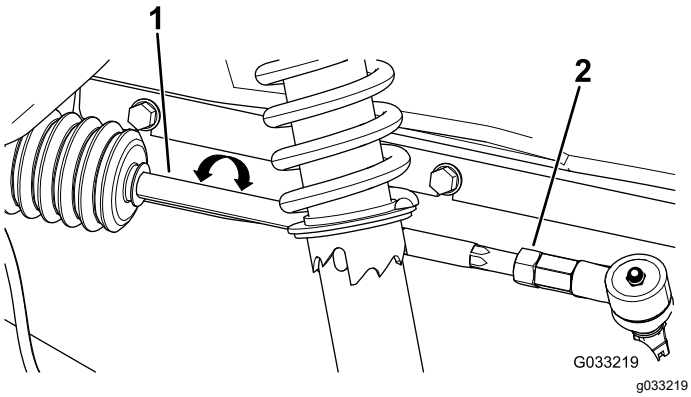


**Figure 47**

1. Tie rod
2. Jam nut

3. Rotate both tie rods to move the front of the tire inward or outward.
4. Tighten the tie rod jam nuts when the adjustment is correct.
5. Ensure that there is full travel of the steering wheel in both directions.

# Checking the Transaxle-Fluid Level

**Service Interval:** Every 100 hours—Check the transaxle-fluid level.

1. Park the machine on a level surface.
2. Engage the parking brake.
3. Shut off the motor and remove the key.
4. Remove the fill plug on the transaxle (Figure 48).

   **Note:** The fluid level should be even with the bottom of the fill plug.

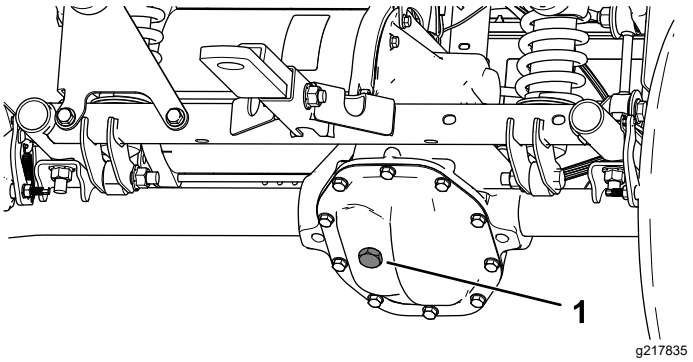


**Figure 48**

1. Fill plug

5. If the fluid level is low, remove the fill plug and add the specified fluid until it runs out of the hole (Figure 48).
6. Install the fill plug and torque it to 20 to 27 N·m (15 to 20 ft-lb).

# Changing the Transaxle Fluid

**Service Interval:** Every 100 hours—Check the transaxle for leaks.

Every 800 hours/Yearly (whichever comes first)—Change the transaxle fluid.

**Fluid Type:** SAE 10W-30 (API service SJ or higher)

**Fluid Capacity:** 0.66 L (0.7 US qt)

1. Align a drain pan under the transaxle cover (Figure 49).

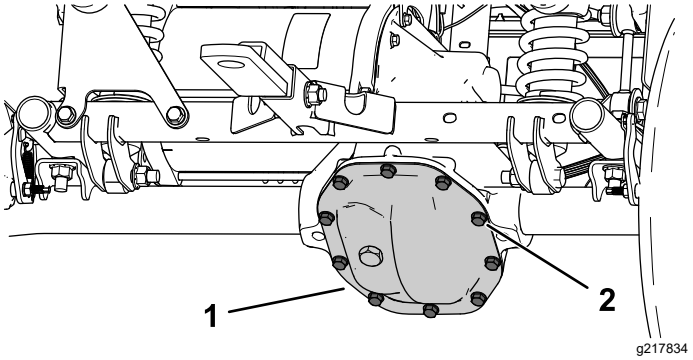


**Figure 49**

1. Transaxle cover
2. Bolts

2. Remove the bolts from the transaxle cover and drain the fluid completely (Figure 49).

   **Note:** Retain the transaxle cover and bolt.

3. Install the transaxle cover using the previously removed bolts, and torque the bolts to 22 to 32 N·m (16 to 24 ft-lb).
4. Remove the fill plug on the transaxle and fill the transaxle with the specified fluid until it runs out of the fill hole (Figure 48).
5. Install the fill plug and torque it to 20 to 27 N·m (15 to 20 ft-lb).

# *Brake Maintenance*

# Checking the Parking Brake

1. Engage the parking brake by pulling the parking-brake lever toward you, until you feel tension.
2. If you do not feel tension when pulling the parking-brake toward you within 11.4 to 16.5 cm (4-1/2 to 6-1/2 inches) from the “P” symbol on the dash, then you need to adjust the parking brake; refer to Adjusting the Parking Brake (page 43).

# Adjusting the Parking Brake

1. Ensure that the parking brake is disengaged.
2. Using jack stands, lift the rear of the machine; refer to Lifting the Machine (page 29).
3. Using 2 wrenches, hold the adjusting post on the caliper in place with 1 wrench, and loosen the jam nut 1/4 turn with the other wrench (Figure 50).

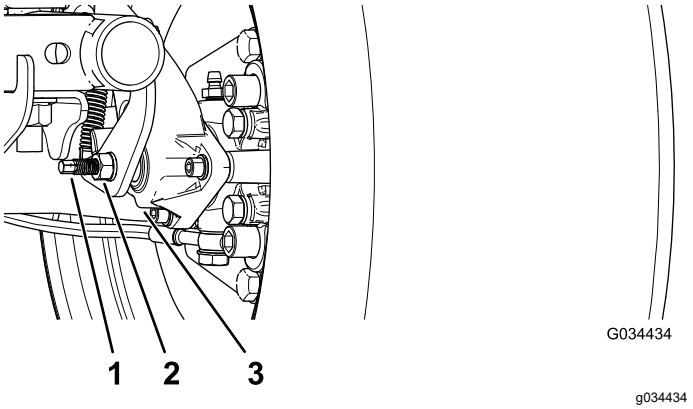


**Figure 50**

1. Adjusting post
2. Jam nut
3. Caliper

4. While holding the adjusting post and the jam nut in place, turn the adjusting post in to tighten (Figure 50).

   **Note:** Perform this step until you feel drag on the wheel.

5. While holding the adjusting post and the jam nut in place, back off 1/4 turn (Figure 50).
6. While holding the adjusting post and the jam nut in place, tighten the jam nut (Figure 50).
7. Perform steps 1 through 6 to the other side.

8. Verify that the parking brake is adjusted to the proper tension; refer to Checking the Parking Brake (page 43).

   **Note:** If you cannot adjust the parking brake to the required tension, the brake pads may be worn and need to be replace. Contact your authorized Toro distributor for assistance.

# Checking the Brake-Fluid Level

**Service Interval:** Before each use or daily Check the brake-fluid level before the motor is first used.

**Brake Fluid Type:** DOT 3

1. Park the machine on a level surface, engage the parking brake, shut off the machine, and remove the key.
2. Raise the hood to gain access to the master-brake cylinder and reservoir (Figure 51).

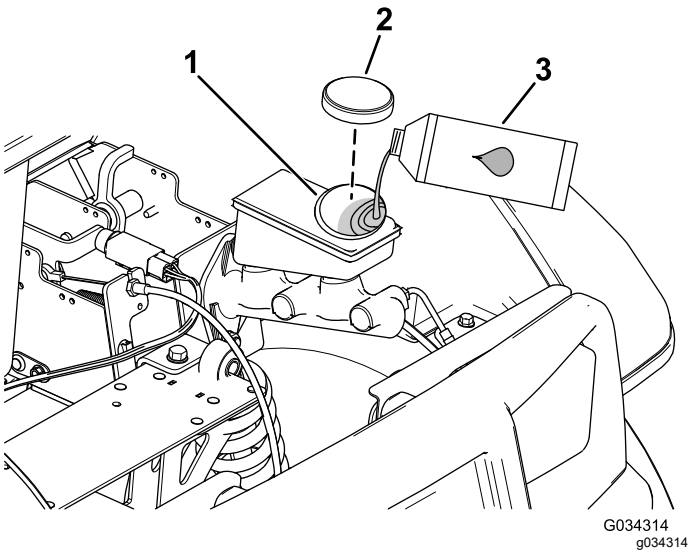


**Figure 51**

1. Filler neck (reservoir)
2. Reservoir cap
3. DOT 3 brake fluid

3. Look at the outline of the fluid level at the side of the reservoir (Figure 52).

   **Note:** The level should be above the Minimum line.

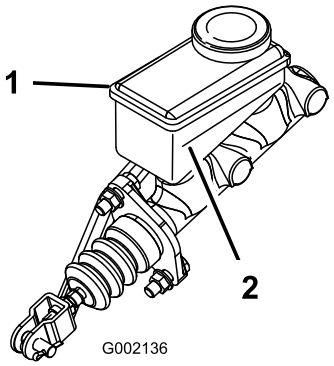


**Figure 52**

1. Brake-fluid reservoir
2. Minimum line

4. If the fluid level is low, perform the following:
   A. Clean the area around the reservoir cap and remove the cap (Figure 51).
   B. Add DOT 3 brake fluid to the reservoir until the fluid level is above the Minimum line (Figure 52).

      **Note:** Do not overfill the reservoir with brake fluid.

   C. Install the reservoir cap (Figure 51).
5. Close the hood of the machine.

# Inspecting the Brakes

**Service Interval:** Every 100 hours

***Important:*** **Brakes are a critical safety component of the machine. Closely inspect them at the recommended service interval to ensure optimum performance and safety.**

- Inspect the brake lining for wear or damage. If the lining (brake pad) thickness is less than 1.6 mm (1/16 inch), replace the brake lining.
- Inspect the backing plate and other components for signs of excessive wear or deformation. Replace any deformed components.
- Check the brake-fluid level; refer to Checking the Brake-Fluid Level (page 44).

## Replacing the Service and Parking-Brake Pads

**Service Interval:** Every 400 hours

Contact your authorized Toro distributor to inspect and possibly replace the service and parking-brake pads.

## Changing the Brake Fluid

**Service Interval:** Every 1,000 hours

Contact your authorized Toro distributor.

# *Chassis Maintenance*

## Adjusting the Cargo-Bed Latches

If the cargo-bed latch is out of adjustment, the cargo bed vibrates up and down as you drive the machine. You can adjust the latch posts to make the latches hold the cargo bed snugly to the chassis.

1. Verify that the cargo bed is latching.

   **Note:** If the cargo bed does not latch, the bed-latch striker is likely too low. If the cargo bed latches, but vibrates up and down as you drive, the bed-latch striker is likely too high.

2. Raise the cargo bed; Raising the Cargo Bed to the Dump Position (page 20).

3. Loosen the 2 bolts on the bed-latch striker and move the striker up or down, depending on if the striker is too high or too low (Figure 53).

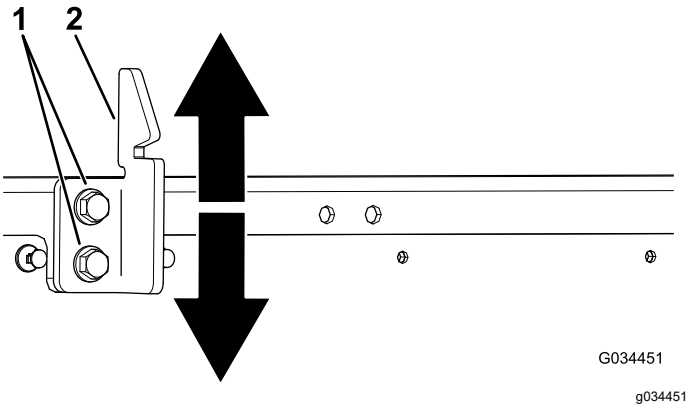


**Figure 53**

1. Bolts
2. Bed-latch striker

4. Tighten the 2 bolts on the bed-latch striker (Figure 53).

5. Verify that the adjustment is correct by latching the cargo bed several times.

# *Cleaning*

## Washing the Machine

**Service Interval:** Before each use or daily—Wash the machine.

Wash the machine as needed using water alone or with a mild detergent. You may use a rag when washing the machine.

***Important:*** **Do not use brackish or reclaimed water to clean the machine.**

***Important:*** **Pressurized water is not recommended when washing the machine. It may damage the electrical system, loosen important decals, or wash away necessary grease at friction points. Avoid excessive use of water, especially near the control panel, motor, motor controller, charger, back of the dashboard, and batteries.**

# Storage

## Storage Safety

- Shut off the machine, remove the key, and wait for all movement to stop before you leave the operator's position. Allow the machine to cool before adjusting, servicing, cleaning, or storing it.
- Do not store the machine or fuel container where there is an open flame, spark, or pilot light, such as on a water heater or other appliance.

## Storing the Machine

1. Park the machine on a level surface, engage the parking brake, shut off the machine, and remove the key.
2. Clean dirt and grime from the entire machine, including the outside of the motor housing.

   ***Important:*** **You can wash the machine with mild detergent and water. Do not use high pressure water to wash the machine. Pressure washing may damage the electrical system or wash away necessary grease at friction points. Avoid excessive use of water, especially near the control panel, lights, motor, and the battery.**
3. Inspect the brakes; refer to Inspecting the Brakes (page 44).
4. Check the tire pressure; refer to Checking the Tire Pressure (page 16).
5. Check and tighten all bolts, nuts, and screws. Repair or replace any part that is damaged.
6. Paint all scratched or bare metal surfaces.

   **Note:** Paint is available from your Authorized Service Dealer.
7. Store the machine in a clean, dry garage or storage area.
8. Remove the key and put it in a safe place out of the reach of children.
9. Cover the machine to protect it and keep it clean.

## Battery Storage

1. Charge the batteries fully before placing the machine into storage; refer to Charging the Batteries (page 35). Plug the charger into a wall outlet while the machine and batteries are in storage. Leave the charger plugged into a wall outlet and charging receptacle during storage to ensure that the batteries stay charged and do not freeze; otherwise, charge the batteries monthly at a minimum.
2. Plug in the charger during storage to maintain full battery life.

   ***Important:*** **If the machine cannot be plugged in during storage, fully charge the batteries at least once a month. The batteries self-discharge over long periods of time, which may damage the batteries to the point of being unusable, even if the batteries are new.**
3. After fully charging the batteries, fill the batteries with distilled or deionized water before storing; refer to Adding Distilled or Deionized Water to the Batteries (page 37).

# Troubleshooting

## Machine-Status Light Flash Pattern

| Problem | Possible Cause | Corrective Action |
|---|---|---|
| The machine-status light is always illuminated. | 1. The system is functioning properly. | 1. None |
| The machine-status light flashed 1 time. | 1. There is a controller-configuration fault. | 1. Contact your Authorized Service Dealer. |
| The machine-status light flashed 2 times. | 1. The parking brake is engaged while in FORWARD or REVERSE position.<br>2. A drive-switch fault occurred. | 1. Disengage the parking brake.<br>2. Turn off the machine and check the functionality of the switches. |
| The machine-status light flashed 3 times. | 1. The motor current exceeded the controller-rated maximum.<br>2. There is an internal-power component fault. | 1. Turn the key switch to the OFF position, wait a few seconds, and turn the key switch to the ON position. Check all batteries and high-current controller connections If the condition continues, refer to your Authorized Service Dealer.<br>2. Contact your Authorized Service Dealer. |
| The machine-status light flashed 4 times. | 1. A main-contactor fault occurred. | 1. Test the contact wires, coil and contacts for normal operation. |
| The machine-status light flashed 5 times. | 1. Exceeded the maximum motor speed. | 1. Turn the key switch to the OFF position, wait a few seconds, turn the key switch to the ON position, and check for normal operation. |
| The machine-status light flashed 6 times. | 1. The throttle is pressed while starting the machine.<br>2. There is a wire that is not making a connection. | 1. Release the pedal, turn the key switch to the OFF position, wait a few seconds, turn the key switch to the ON position, and check for normal operation.<br>2. Test the wiring between the controller and contactor, switches, and the status-indicator light. |
| The machine-status light flashed 7 times. | 1. The remaining charge on the batteries is low.<br>2. The batteries are fully discharged.<br>3. The internal capacitor has a pre-charge of less than 5V. | 1. Stop operation, drive slowly to your nearest charging station, and charge the batteries fully.<br>2. Tow the machine to your charging station and charge the batteries fully.<br>3. Fully charge the batteries, turn the key switch to the OFF position, wait a few seconds, turn the key switch to the ON position, and check for normal operation. |
| The machine-status light flashed 8 times. | 1. The controller or motor is overheated or too cold. | 1. Determine if the motor or controller is very hot or very cold, then allow the machine to return to safe temperatures before resuming normal operation. |
| The machine-status light flashed 10 times. | 1. A controller-configuration fault occurred. | 1. Contact your Authorized Service Dealer. |

| Problem | Possible Cause | Corrective Action |
|---|---|---|
| The machine-status light flashed 11 times. | 1. A motor-encoder fault occurred.<br>2. Exceeded the maximum motor speed. | 1. Check the motor-encoder (speed sensor) wiring.<br>2. Turn the key switch to the OFF position, wait a few seconds, turn the key switch to the ON position, and check for normal operation. |
| The machine-status light flashed 12 times. | 1. A controller-configuration fault occurred. | 1. Contact your Authorized Service Dealer. |
| The machine-status light flashed 13 times. | 1. An internal-software fault occurred. | 1. Contact your Authorized Service Dealer. |
| The machine-status light flashed 14 times. | 1. A communication fault occurred. | 1. Contact your Authorized Service Dealer. |
| The machine-status light is not illuminated. | 1. There is either no power to the controller or the controller has failed. | 1. Contact your Authorized Service Dealer. |

# EEA/UK Privacy Notice

**Toro's Use of Your Personal Information**

The Toro Company ("Toro") respects your privacy. When you purchase our products, we may collect certain personal information about you, either directly from you or through your local Toro company or dealer. Toro uses this information to fulfil contractual obligations - such as to register your warranty, process your warranty claim or to contact you in the event of a product recall - and for legitimate business purposes - such as to gauge customer satisfaction, improve our products or provide you with product information which may be of interest. Toro may share your information with our subsidiaries, affiliates, dealers or other business partners in connection these activities. We may also disclose personal information when required by law or in connection with the sale, purchase or merger of a business. We will never sell your personal information to any other company for marketing purposes.

**Retention of your Personal Information**

Toro will keep your personal information as long as it is relevant for the above purposes and in accordance with legal requirements. For more information about applicable retention periods please contact legal@toro.com.

**Toro's Commitment to Security**

Your personal information may be processed in the US or another country which may have less strict data protection laws than your country of residence. Whenever we transfer your information outside of your country of residence, we will take legally required steps to ensure that appropriate safeguards are in place to protect your information and to make sure it is treated securely.

**Access and Correction**

You may have the right to correct or review your personal data, or object to or restrict the processing of your data. To do so, please contact us by email at legal@toro.com. If you have concerns about the way in which Toro has handled your information, we encourage you to raise this directly with us. Please note that European residents have the right to complain to your Data Protection Authority.

# California Proposition 65 Warning Information

## What is this warning?

You may see a product for sale that has a warning label like the following:



**WARNING:** Cancer and Reproductive Harm—www.p65Warnings.ca.gov.

## What is Prop 65?

Prop 65 applies to any company operating in California, selling products in California, or manufacturing products that may be sold in or brought into California. It mandates that the Governor of California maintain and publish a list of chemicals known to cause cancer, birth defects, and/or other reproductive harm. The list, which is updated annually, includes hundreds of chemicals found in many everyday items. The purpose of Prop 65 is to inform the public about exposure to these chemicals.

Prop 65 does not ban the sale of products containing these chemicals but instead requires warnings on any product, product packaging, or literature with the product. Moreover, a Prop 65 warning does not mean that a product is in violation of any product safety standards or requirements. In fact, the California government has clarified that a Prop 65 warning "is not the same as a regulatory decision that a product is 'safe' or 'unsafe.'" Many of these chemicals have been used in everyday products for years without documented harm. For more information, go to https://oag.ca.gov/prop65/faqs-view-all.

A Prop 65 warning means that a company has either (1) evaluated the exposure and has concluded that it exceeds the "no significant risk level"; or (2) has chosen to provide a warning based on its understanding about the presence of a listed chemical without attempting to evaluate the exposure.

## Does this law apply everywhere?

Prop 65 warnings are required under California law only. These warnings are seen throughout California in a wide range of settings, including but not limited to restaurants, grocery stores, hotels, schools, and hospitals, and on a wide variety of products. Additionally, some online and mail order retailers provide Prop 65 warnings on their websites or in catalogs.

## How do the California warnings compare to federal limits?

Prop 65 standards are often more stringent than federal and international standards. There are various substances that require a Prop 65 warning at levels that are far lower than federal action limits. For example, the Prop 65 standard for warnings for lead is 0.5 µg/day, which is well below the federal and international standards.

## Why don't all similar products carry the warning?

- Products sold in California require Prop 65 labelling while similar products sold elsewhere do not.
- A company involved in a Prop 65 lawsuit reaching a settlement may be required to use Prop 65 warnings for its products, but other companies making similar products may have no such requirement.
- The enforcement of Prop 65 is inconsistent.
- Companies may elect not to provide warnings because they conclude that they are not required to do so under Prop 65; a lack of warnings for a product does not mean that the product is free of listed chemicals at similar levels.

## Why does Toro include this warning?

Toro has chosen to provide consumers with as much information as possible so that they can make informed decisions about the products they buy and use. Toro provides warnings in certain cases based on its knowledge of the presence of one or more listed chemicals without evaluating the level of exposure, as not all the listed chemicals provide exposure limit requirements. While the exposure from Toro products may be negligible or well within the "no significant risk" range, out of an abundance of caution, Toro has elected to provide the Prop 65 warnings. Moreover, if Toro does not provide these warnings, it could be sued by the State of California or by private parties seeking to enforce Prop 65 and subject to substantial penalties.

# The Toro Warranty

A Limited Warranty

Electric
Workman

## Conditions and Products Covered

The Toro Company and its affiliate, Toro Warranty Company, pursuant to an agreement between them, jointly warrant your Toro Commercial product ("Product") to be free from defects in materials or workmanship for two years or 1500 operational hours*, whichever occurs first. Where a warrantable condition exists, we will repair the Product at no cost to you including diagnostics, labor, parts, and transportation. This warranty begins on the date the Product is delivered to the original retail purchaser.
* Product equipped with an hour meter.

## Instructions for Obtaining Warranty Service

You are responsible for notifying the Commercial Products Distributor or Authorized Commercial Products Dealer from whom you purchased the Product as soon as you believe a warrantable condition exists. If you need help locating a Commercial Products Distributor or Authorized Dealer, or if you have questions regarding your warranty rights or responsibilities, you may contact us at:

Commercial Products Service Department
Toro Warranty Company
8111 Lyndale Avenue South
Bloomington, MN 55420-1196
E-mail: commercial.warranty@toro.com

## Owner Responsibilities

As the Product owner, you are responsible for required maintenance and adjustments stated in your *Operator's Manual*. Failure to perform required maintenance and adjustments can be grounds for disallowing a warranty claim.

## Items and Conditions Not Covered

Not all product failures or malfunctions that occur during the warranty period are defects in materials or workmanship. This warranty does not cover the following:

- Product failures which result from the use of non-Toro replacement parts, or from installation and use of add-on, or modified non-Toro branded accessories and products. A separate warranty may be provided by the manufacturer of these items.
- Product failures which result from failure to perform recommended maintenance and/or adjustments. Failure to properly maintain your Toro product per the Recommended Maintenance listed in the *Operator's Manual* can result in claims for warranty being denied.
- Product failures which result from operating the Product in an abusive, negligent or reckless manner.
- Parts subject to consumption through use unless found to be defective. Examples of parts which are consumed, or used up, during normal Product operation include, but are not limited to, batteries, carbon brushes, brake components, tires, filters, belts, etc.
- Failures caused by outside influence. Items considered to be outside influence include, but are not limited to, weather, storage practices, contamination, use of unapproved lubricants, additives, chemicals, etc.
- Normal "wear and tear" items. Normal "wear and tear" includes, but is not limited to, damage to seats due to wear or abrasion, worn painted surfaces, scratched decals or windows, etc.

## Parts

Parts scheduled for replacement as required maintenance are warranted for the period of time up to the scheduled replacement time for that part. Parts replaced under this warranty are covered for the duration of the original product warranty and become the property of Toro. Toro will make the final decision whether to repair any existing part or assembly or replace it. Toro may use remanufactured parts for warranty repairs.

## Note Regarding Deep Cycle Battery Warranty:

Deep cycle batteries have a specified total number of kilowatt-hours they can deliver during their lifetime. Operating, recharging, and maintenance techniques can extend or reduce total battery life. As the batteries in this product are consumed, the amount of useful work between charging intervals will slowly decrease until the battery is completely worn out. Replacement of worn out batteries, due to normal consumption, is the responsibility of the product owner. Battery replacement may be required during the normal product warranty period at owner's expense.

## General Conditions

Repair by an Authorized Toro Distributor or Dealer is your sole remedy under this warranty.

**Neither The Toro Company nor Toro Warranty Company is liable for indirect, incidental or consequential damages in connection with the use of the Toro Products covered by this warranty, including any cost or expense of providing substitute equipment or service during reasonable periods of malfunction or non-use pending completion of repairs under this warranty.**

All implied warranties of merchantability and fitness for use are limited to the duration of this express warranty. Some states do not allow exclusions of incidental or consequential damages, or limitations on how long an implied warranty lasts, so the above exclusions and limitations may not apply to you.

This warranty gives you specific legal rights, and you may also have other rights which vary from state to state.

## Countries Other than the United States or Canada

Customers who have purchased Toro products exported from the United States or Canada should contact their Toro Distributor (Dealer) to obtain guarantee policies for your country, province, or state. If for any reason you are dissatisfied with your Distributor's service or have difficulty obtaining guarantee information, contact the Toro importer. If all other remedies fail, you may contact us at Toro Warranty Company.