1976

FORM NO. 3310-780

TORO®

MODEL NO. 20451-600001 & UP

PARTS CATALOG

21" H.P. GRASSMASTER FINGERTIP

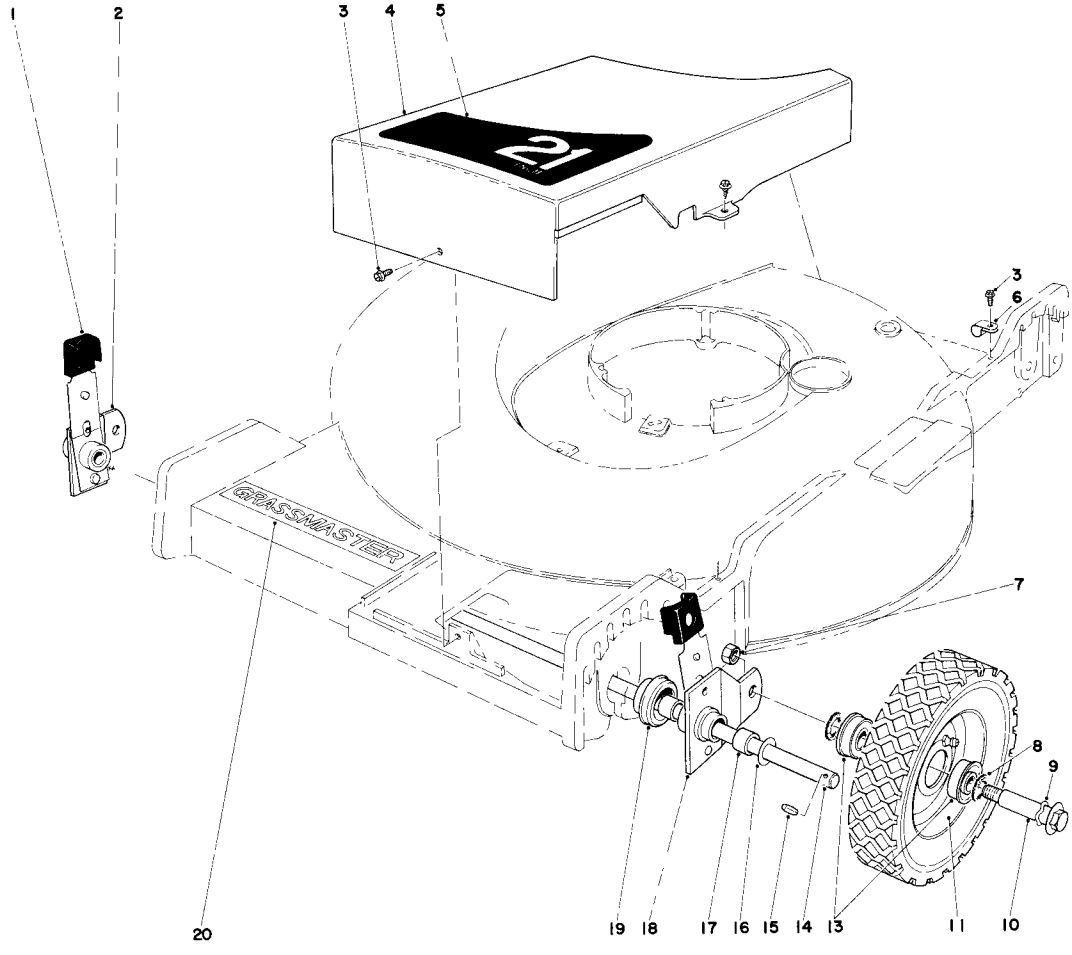

FRONT WHEEL AND PIVOT ARM ASSEMBLY

Ref. No.	Part No.	Description	No. Used
1	25-7740	Knob Arm	2
2	25-8190	Pivot Arm (Incl. Ref. #17)	1
3	12-5450	Screw Special	4
4	23-0510	Belt Cover	1
5	23-0870	Decal – Front Housing	1
6	2412-51	Cable Clamp	1
7	32146-12	Locknut	2
8	26-7500	Felt Washer	4
9	3290-393	Wave Washer	2
10	3-2652	Wheel Bolt	2

Ref. No.	Part No.	Description	No. Used
11	26-2960	Wheel & Tire assembly (Incl. Ref. #13)	2
13	251-180	Bearing	4
14	27-0050	Shaft – Pivot Arm	1
15	3284-3	Groove Pin	2
16	18-9810	Washer	2
17	256-206	Bushing	4
18	25-8180	Pivot Arm (Incl. Ref. #17)	1
19	23-0380	End Cap	2
20	23-0930	Decal – Grassmaster	1

COPYRIGHT 1976 BY

The Toro Company
MINNEAPOLIS, MINN. 55420 U.S.A.

PRICE $1.00

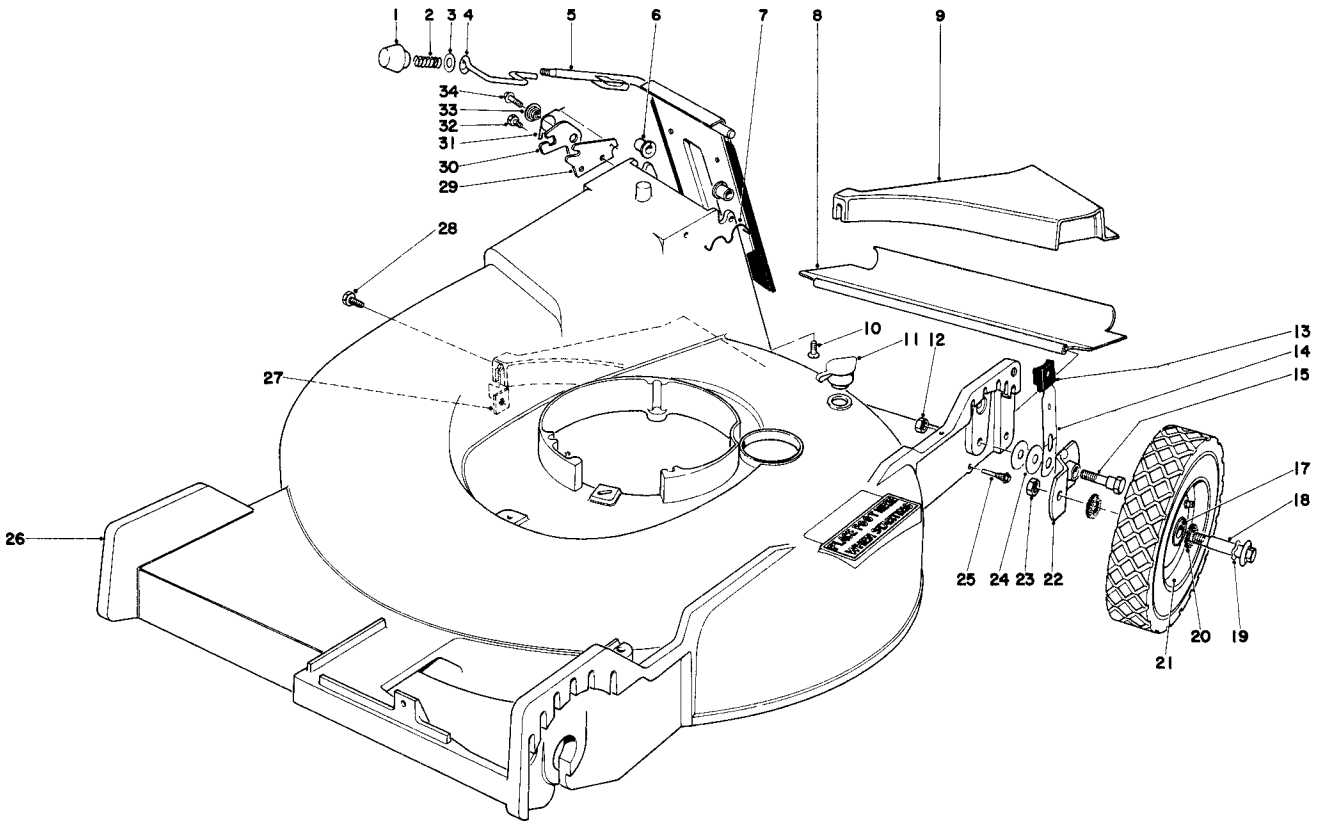

HOUSING ASSEMBLY

Ref. No.	Part No.	Description	No. Used
1	233-37	Knob	1
2	23-0920	Spring – Compression	1
3	23-1120	Washer	1
4	23-0940	Latch Door	1
5	23-0990	Door Handle	1
6	23-0880	Bushing	2
7	23-0200	Door Retainer	1
8	23-0560	Rear Safety Shield	1
9	23-0360	Insert Rear	1
10	32144-17	Screw Flat Hd	2
11	6-4500	Washout Plug	1
12	32146-5	Locknut	2
13	25-7740	Knob Arm	2
14	25-8000	Spring Arm	2
15	25-3440	Pivot Screw	2
17	251-180	Bearing	4
18	3-2652	Wheel Bolt	2
19	3290-393	Wave Washer	2
20	26-7500	Felt Washer	4

Ref. No.	Part No.	Description	No. Used
21	26-2960	Wheel & Tire Assembly (Incl. Ref #17)	2
22	24-7710	Pivot Arm Assembly "A"	1
*	23-9120	Pivot Arm Assembly "B"	1
23	32146-12	Locknut	2
24	5-4460	Pivot Washer	4
25	8-6160	Pivot Screw	2
26	6-4659	Housing	1
27	26-0660	Nut Special	1
28	32104-114	Screw Self Tapping	1
29	23-1040	Latch Plate	1
30	23-1190	Safety Latch	1
31	23-1200	Spring – Torsion	1
32	32104-17	Screw	1
33	23-1180	Latch Spacer	1
34	11-9760	Screw Thread Forming	1
*	26-0730	Loose Parts	1
*	26-9510	Replacement Stud Kit	1

*Not Illustrated

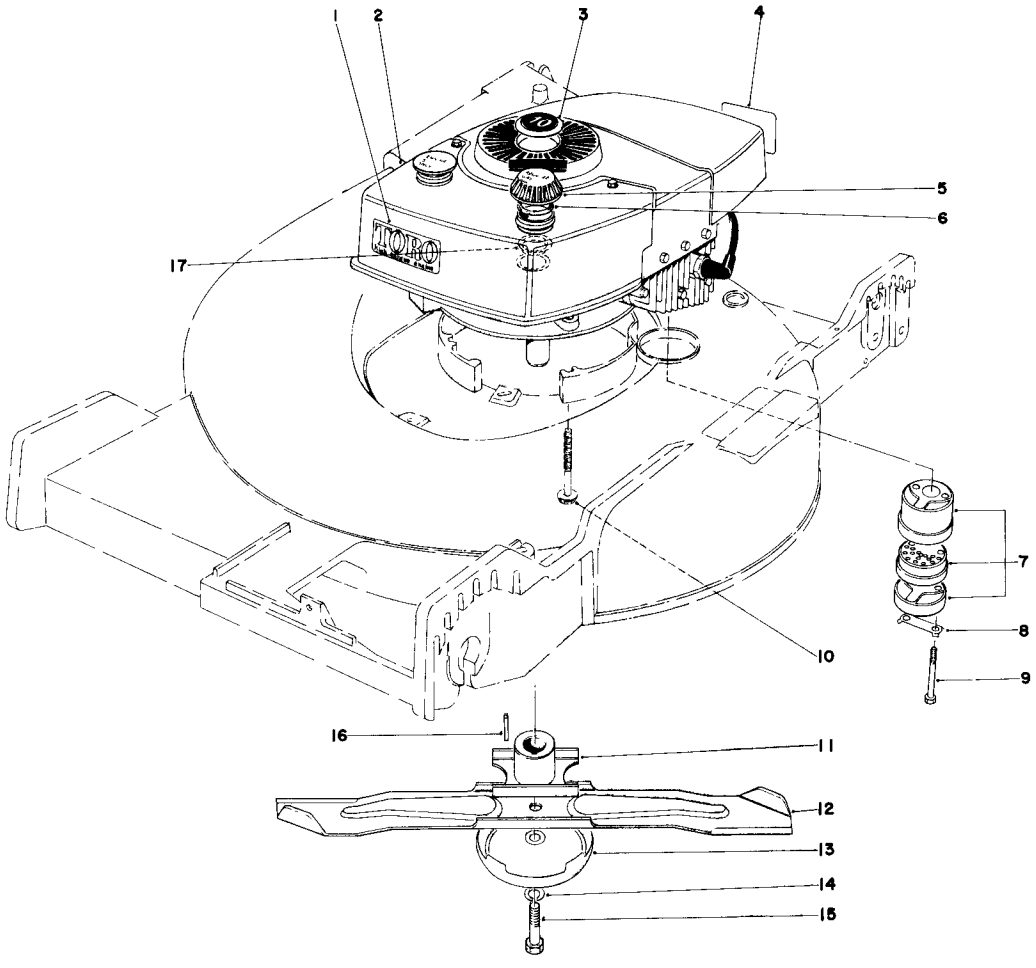

ENGINE ASSEMBLY

Ref. No.	Part No.	Description	No. Used
1	23-1260	Decal – High Torque	1
2	221-516	Engine	1
3	21-4870	Plug – Button	1
4	20-2710	Decal – Maintenance	1
5	20-2860	Gas Cap (Incl. Ref. #6 & 17)	1
6	2210-144	Gasket – Gas Cap	2
7	5-4769	Muffler Assembly (Incl. Ref. #8 & 9)	1
8	3-5094	Locking Clip	1

Ref. No.	Part No.	Description	No. Used
9	321-20	Screw Hex Hd	2
10	11-0580	Screw	3
11	26-0770	Blade Retainer	1
12	26-0880	Blade	1
13	8-4240	Anti-Scalp Cup	1
14	3253-22	Lockwasher	1
15	26-0670	Screw Blade	1
16	3-6857	Key	1
17	2210-143	Baffle – Gas Cap	1

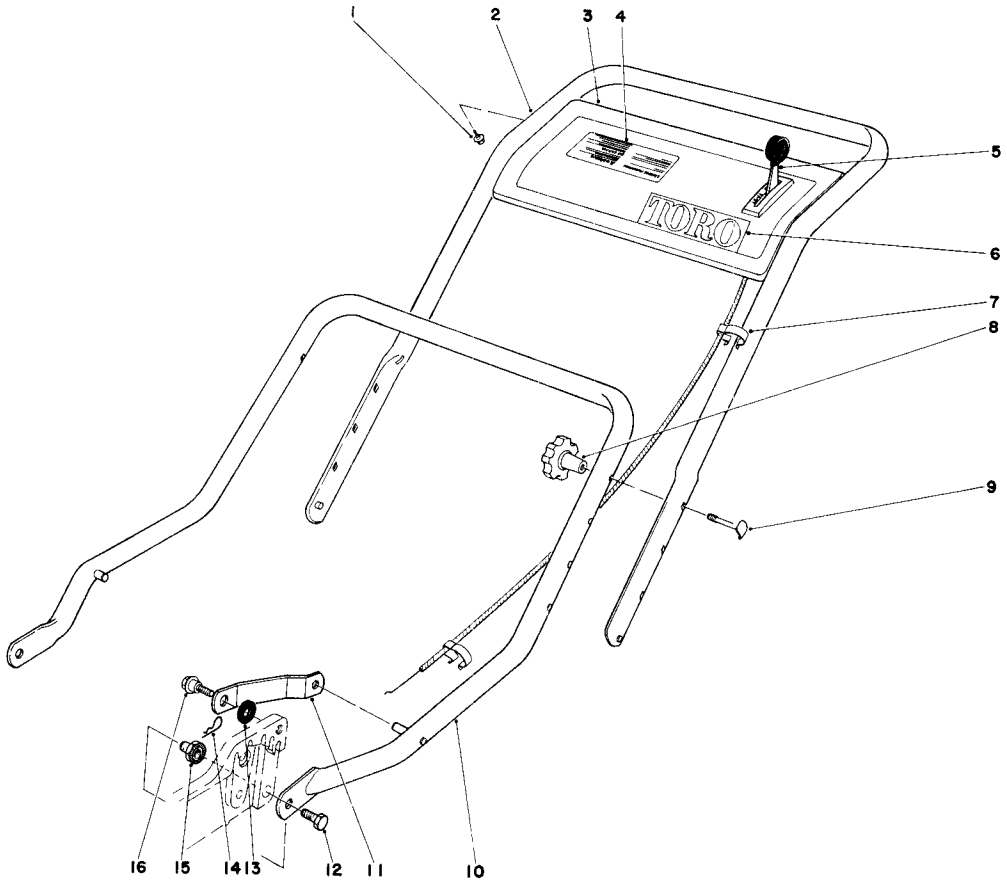

HANDLE ASSEMBLY

Ref. No.	Part No.	Description	No. Used
1	32104-76	Self Tapping Screw	4
2	23-0580	Upper Handle	1
3	26-3090	Control Plate	1
4	26-3080	Decal – Control Plate	1
5	26-0710	Throttle Control	1
6	20-4690	Decal	1
7	218-465	Clip Conduit	2
8	19-4050	Handle Knob	2

Ref. No.	Part No.	Description	No. Used
9	6-6330	Handle Screw	2
10	26-0740	Lower Handle	1
11	26-0760	Handle Latch	2
12	322-5	Capscrew	2
13	3-3287	Spacer Latch	2
14	3290-255	Hairpin Cotter	2
15	12-2080	Handle Pivot Nut	2
16	5-2490	Shoulder Screw	2

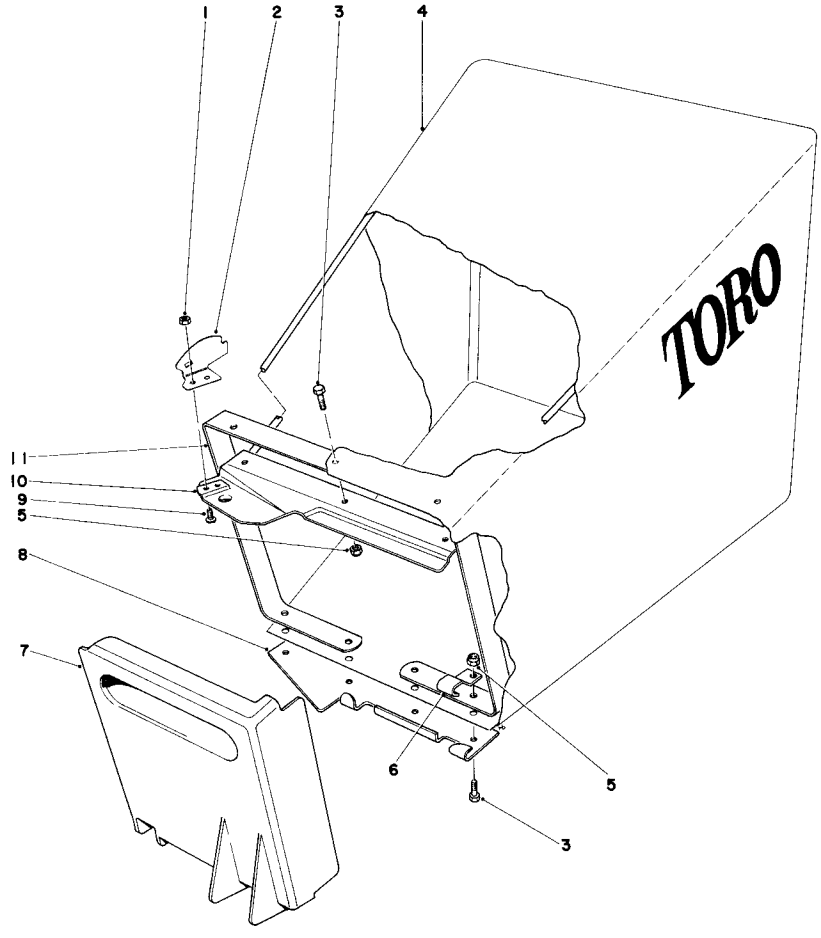

GRASS BAG ASSEMBLY

Ref. No.	Part No.	Description	No. Used
1	32146-17	Locknut	2
2	23-1060	Latch Bag	1
3	3290-321	Hex Hd. Machine Screw	7
4	6-1389	Grass Bag	1
5	32153-1	Locknut	7
6	23-5100	Support Bracket	1

Ref. No.	Part No.	Description	No. Used
7	23-1140	Bag Door	1
8	23-1150	Door Bracket	1
9	25-3120	Screw	2
10	25-3230	Bag Frame	1
11	23-1110	Bag Support	1
*	6-5689	Grass Bagging Kit (Incl. Ref. 1 thru 11)	1

*Not Illustrated

ENGINE TECUMSEH MODEL NO. TNT 100-10045

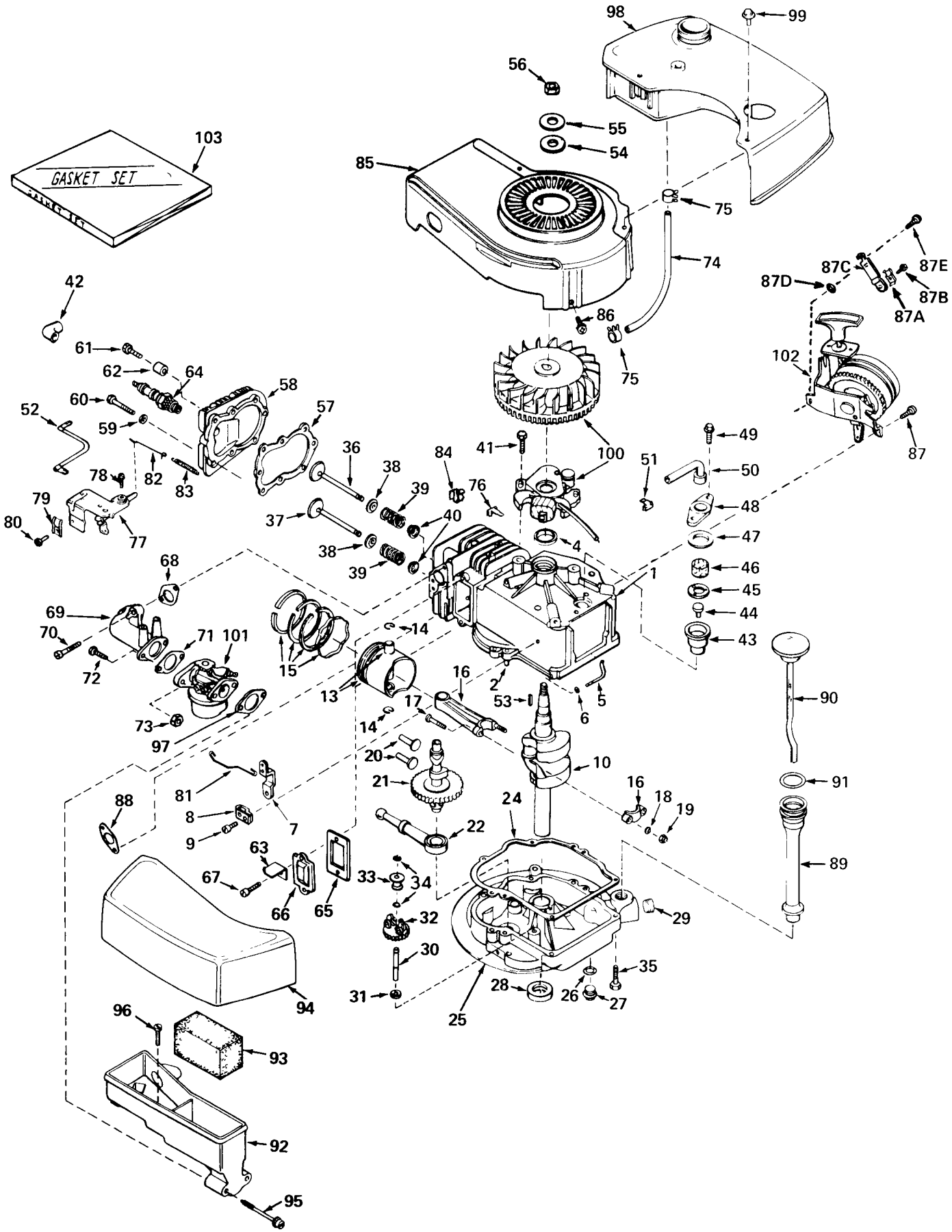

ENGINE TECUMSEH MODEL NO. TNT 100-10045

Ref. No.	Part No.	Description	No. Used
1	33883	Cylinder Assembly (Incl. Nos. 2, 4 & 87)	1
2	26727	Pin, Dowel	2
4	29183	Seal, Oil	1
5	30589	Rod, Governor (Incl. No. 6)	1
6	28277	Washer, Flat	1
7	32651	Lever, Governor	1
8	31335	Clamp, Governor Lever	1
9	650548	Screw, Hex Slotted Washer Hd.	1
10	33884	Crankshaft	1
13	32603	Piston & Pin Assembly (Incl. 2 of No. 14) (Std.)	1
13	32604	Piston & Pin Assembly (Incl. 2 of No. 14) (.010 Oversize)	1
13	32605	Piston & Pin Assembly (Incl. 2 of No. 14) (.020 Oversize)	1
14	20381	Ring, Piston Pin Retaining	2
15	32606	Ring Set, Piston (Std.)	1
15	32607	Ring Set, Piston (.010 Oversize)	1
15	32608	Ring Set, Piston (.020 Oversize)	1
16	30963B	Rod Assembly Connecting (Incl. Nos. 17, 18 & 19)	1
17	26706	Bolt, Connecting Rod	2
18	20747	Washer, Connecting Rod Bolt	2
19	27573	Nut, Connecting Rod	2
20	27241	Lifter, Valve	2
21	34014	Camshaft (Mech. Compression Release)	1
22	29914	Pump Assembly, Oil	1
24	*26750A	Gasket, Mounting Flange	1
25	33898	Flange Assembly, Mounting (Incl. Nos. 27 thru 30)	1
26	*28833	Gasket, Oil Drain Plug	1
27	27244	Plug, Oil Drain	1
28	26208	Seal, Oil	1
29	33885	Plug, Oil Drain	1
30	30574	Shaft, Mechanical Governor	1
31	30590A	Washer, Flat	1
32	30591	Gear Assembly, Governor (Incl. No. 31)	1
33	30588A	Spool, Governor	1
34	29193	Ring, Retaining	2
35	650488	Screw, Hex Hd. Sems	6
36	29314A	Valve, Intake (Std.) (Incl. Nos. 38, 39 & 40)	1
36	29315B	Valve, Intake (1/32" Oversize) (Incl. Nos. 38, 39 & 40)	1
37	29313B	Valve, Exhaust (Std.) (Incl. Nos. 38, 39 & 40)	1
37	29315B	Valve, Exhaust (1/32" Oversize) (Incl. No. 38, 39 & 40)	1
38	31671	Cap, Upper Valve Spring	2
39	31672	Spring, Valve	2
40	31673	Cap, Lower Valve Spring	2
41	650489	Screw, Hex Hd. Sems w/Flatwasher	2
42	610118	Cover, Spark Plug	1
43	33731	Body, Breather Tube	1
44	33732	Valve, Check	1
45	33733	Baffle, Breather	1
46	33734	Element, Breather	1
47	*33735	Gasket, Breather	1
48	33737	Cover, Breather	1
49	650768	Screw, Hex Hd. w/Conical Washer	2
50	33886	Tube, Breather	1
51	33887	Clip, Breather Tube	1
52	28468	Wire, Ground	1

Ref. No.	Part No.	Description	No. Used
53	27247	Key, Flywheel	1
54	650791	Washer, Flat	1
55	650763	Washer, Belleville	1
56	650607	Nut, Flywheel	1
57	*33015	Gasket, Cylinder Head	1
58	33016	Head, Cylinder	1
59	26073	Washer	5
60	6021	Screw, Hex Hd. Cap	5
61	650697	Screw, Hex Hd. Cap	3
62	33892	Spacer	3
63	30593	Clip, Magneto Wire	1
64	33636	Plug, Spark (Champion J-8 or equivalent)	1
65	*27234	Gasket, Valve Spring Cover	1
66	32755	Cover, Valve Spring Box	1
67	650128	Screw, Fil. Slotted Hd. Sems	2
68	*30188	Gasket, Intake Pipe	1
69	33004	Pipe, Intake	1
70	650451	Screw, Fil Flex Hd. Self-Locking	2
71	*31688	Gasket, Carburetor	1
72	6202	Screw, Hex Hd. Cap Sems	2
73	29752	Nut & Lockwasher	2
74	30705	Line, Fuel	1
75	26460	Clamp, Fuel Line	2
76	29443	Clip, Fuel Line	1
77	33889	Control Assembly, Speed	1
78	650783	Screw, Hex Washer Hd. Thread Forming Sems	1
79	27793	Clip, Conduit	1
80	28942	Screw, Slotted Hex Hd. Sems	1
81	33133	Link, Governor	1
82	33295	Link, Governor Spring	1
83	33890	Spring, Governor	1
84	27275	Clip, Wire	1
85	33891	Housing, Blower	1
86	650497	Screw, Flex Pan Hd.	2
87	650737	Screw, Hex Washer Hd. Taptite	2
87A	27793	Clip, Conduit	1
87B	28942	Screw, Slotted Hex Hd. Sems	1
87C	34099	Bracket	1
87D	27070	Washer	1
87E	650738	Screw, Phil. Hex Hd. Self-Tap	1
88	*30081	Gasket, Exhaust	1
89	33893	Tube, Oil Filler	1
90	33894	Dipstick, Oil (Incl. No. 91)	1
91	33590	"O" Ring	1
92	33895	Body, Air Cleaner	1
93	33896	Filter, Air	1
94	33897	Cover, Air Cleaner	1
95	650762	Screw, Fil. Hd. Mach. Sems	2
96	650784	Screw, Hex Hd. w/Flatwasher Thread Forming	1
97	*33051	Gasket, Air Cleaner	1
98	33904	Tank, Fuel	1
99	28763	Screw, Hex Washer Hd. Thread Forming	2
100	610793	Magneto (The complete magneto is not available as an assembly. The magneto no. is shown for reference purposes only. Order component parts individually, as shown in parts list.)	1
101	631784A	Carburetor (Incl. No. 71)	1
102	590519	Starter, Sidemount	1
103	33906	Gasket Set (Incl. items marked *)	1

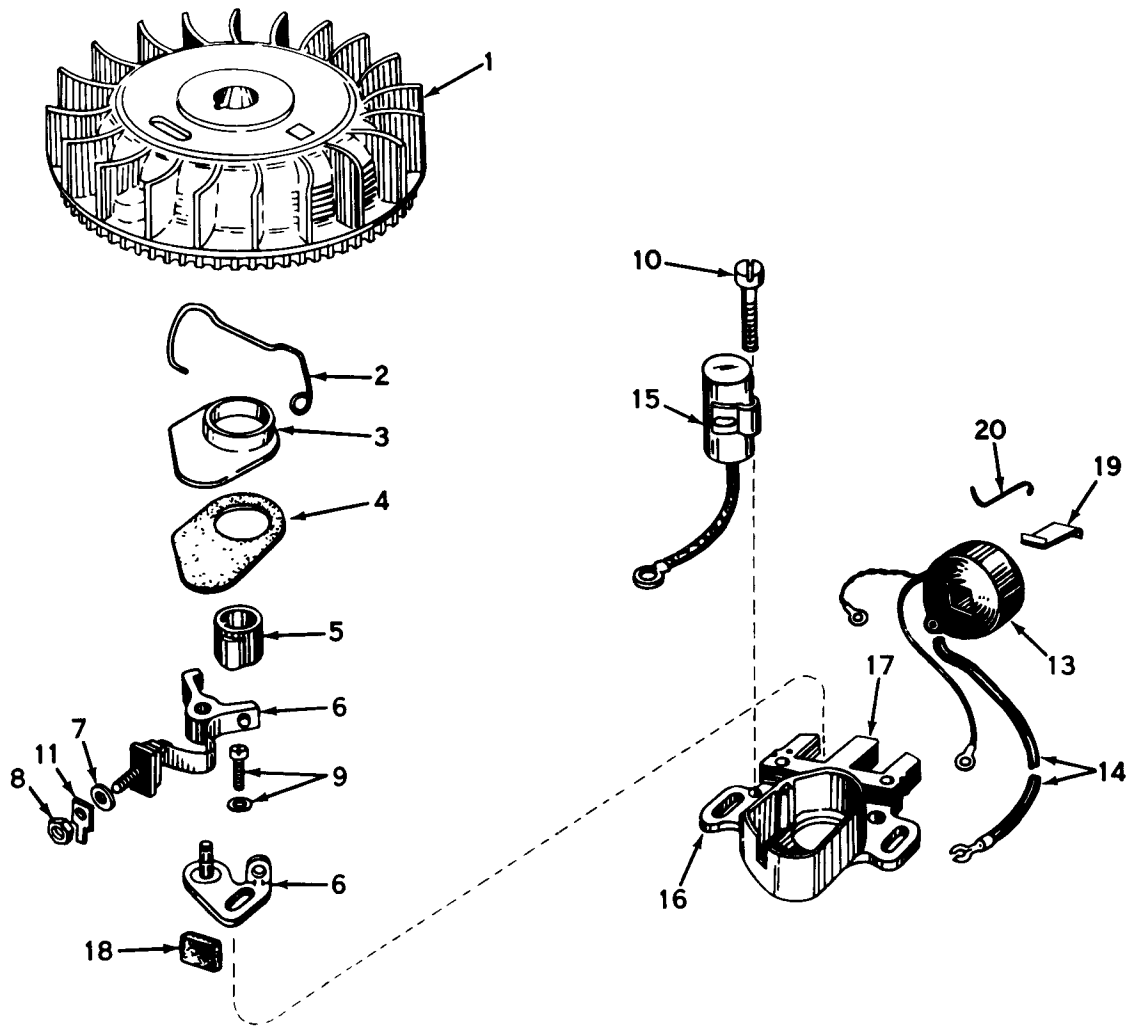

MAGNETO NO. 610793*

Ref. No.	Part No.	Description	No. Used
1	610782	Flywheel	1
2	30551	Spring, Breaker Box Dust Cover	1
3	30550	Cover, Breaker Box Dust	1
4	32052	Gasket, Dust Cover	1
5	30552	Cam, Breaker	1
6	30547A	Breaker Assembly	1
7	610385	Washer, Terminal	1
8	610408	Nut, Terminal	1
9	29181	Screw & Washer Assy., Breaker	1
10	610593	Screw, Condenser Fastening	1

Ref. No.	Part No.	Description	No. Used
11	33356	Tab, Ground Terminal	1
13	30560A	Coil Assembly (Incl. No. 14)	1
14	30554	Wire, Ignition Lead	1
15	30548A	Condenser	1
16	30545	Core & Plate Group	1
17	30561A	Stator Assy. (Incl. Nos. 2, 3, 4, 6 thru 16, 18, 19 & 20)	1
18	30549	Felt, Cam Wiper	1
19	29629	Spring, Coil Wedge	1
20	31311	Clip, Coil Locking	1

*The complete magneto is not available as an assembly. The magneto number is shown for reference purposes only. Order component parts individually, as shown in parts list.

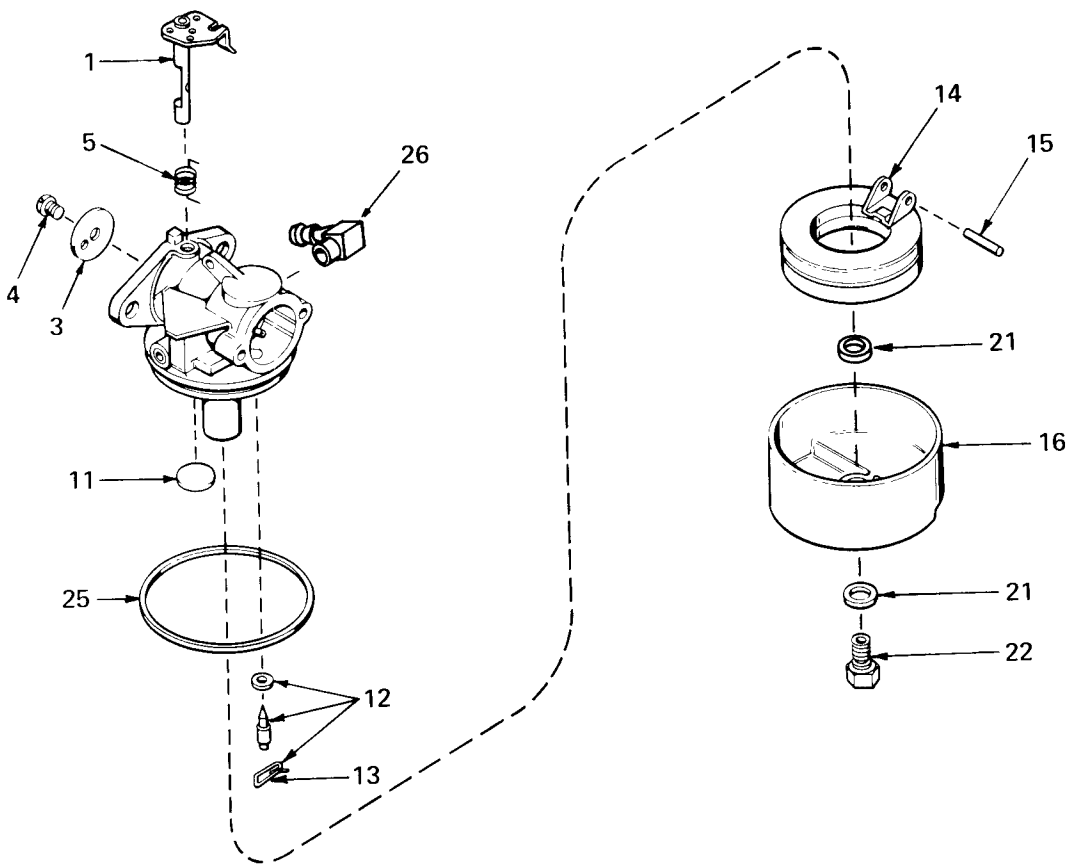

CARBURETOR NO. 631784A

Ref. No.	Part No.	Description	No. Used
1	631615	Shaft & Lever Assy., Throttle	1
3	631616	Shutter, Throttle	1
4	650506	Screw	1
5	630731	Spring, Return	1
11	631027	Plug, Welch	1
12	631021	Inlet Needle, Seat & Clip Assy. (Incl. No. 13)	1

Ref. No.	Part No.	Description	No. Used
13	631022	Clip, Inlet Needle	1
14	631023	Float, Carburetor	1
15	631024	Shaft, Float	1
16	631700	Bowl, Float	1
21	631334	Gasket, Bowl-to-body	1
22	631935	Nut, Float Bowl	1
25	631028	Gasket, Bowl-to-body	1
26	631807	Fitting, Fuel Inlet	1

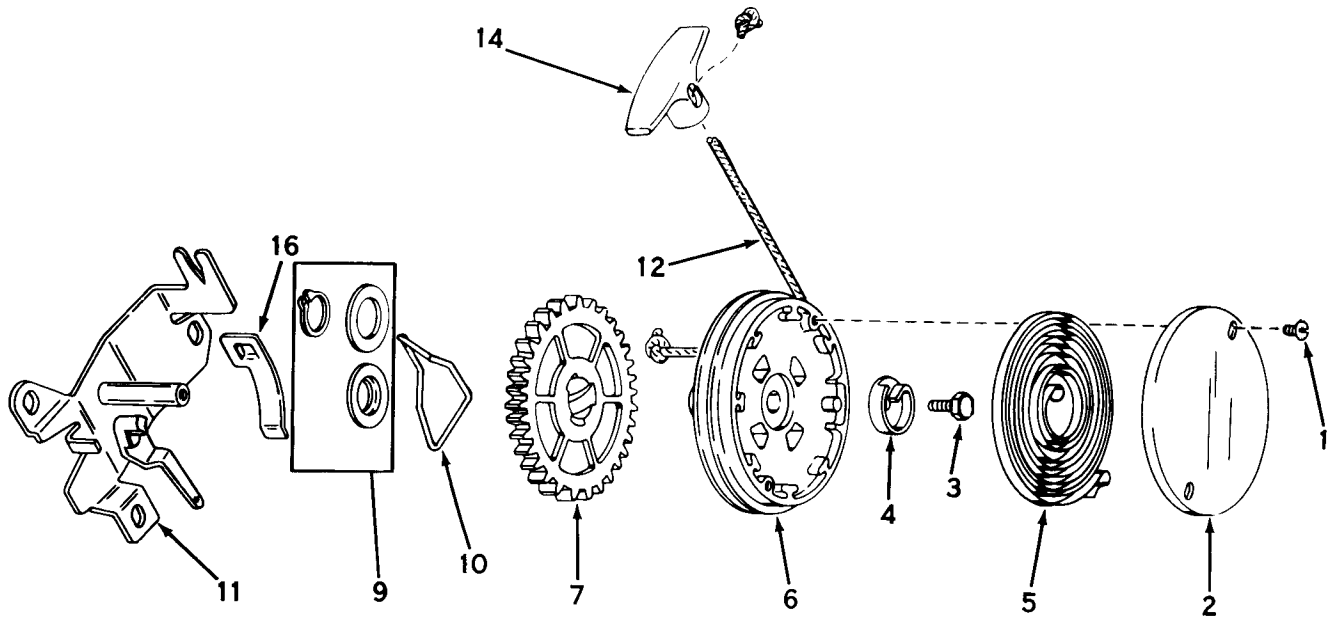

REWIND STARTER NO. 590519

Ref. No.	Part No.	Description	No. Used
1	590477	Screw, Cover	2
2	590431	Cover, Spring	1
3	590472	Screw, Hex Washer Hd. Taptite Left Hand Thread	1
4	590432	Hub, Spring	1
5	590433	Spring, Rewind	1
6	590434A	Pulley Assembly (Incl. No. 9)	1
7	590435B	Gear	1

Ref. No.	Part No.	Description	No. Used
9	590470	Kit, Thrust Washer & Snap Ring	1
10	590438	Brake	1
11	590520	Bracket Assembly, Mounting	1
12	590451A	Rope, Starter (Length 69" and 5/32" Diameter)	1
14	590452	Handle, Starter	1
16	590446	Clip, Rope	1

PRODUCT CHANGES

In an effort to make improvements available to TORO owners as quickly as possible, minor changes are incorporated into Toro's products from time to time that do not become immediately shown in the Parts Catalog. If such a change apparently has been made in your unit, which is not reflected in your manual, see your TORO Distributor or his Authorized TORO Service Dealer for information and part numbers.

IDENTIFICATION AND ORDERING

Model and Serial Numbers

The Mower has two identification numbers: a model number and a serial number. The two numbers are stamped on a decal which is located on left side of the mower housing. In any correspondence concerning the mower, supply model and serial numbers to assure that correct information and replacement parts are obtained.

To order replacement parts from an Authorized TORO Service Dealer, supply the following information.

1. Model and serial numbers of the mower.
2. Part number, description, and quantity of part(s) desired.

NOTE: Do not order by reference number if a parts catalog is being used; use the PART NUMBER.

Keep Your TORO All Toro Genuine TORO PARTS & ACCESSORIES ***Insist on Genuine Toro Parts***

THE TORO PROMISE

It is Toro's policy to design and produce TORO products to provide our customers with a high level of performance and durability in normal operation. Our products, however, are produced in high volume, and it is inevitable that occasionally a unit will reach a customer with a defect in materials or workmanship which causes the unit to fall below the normal high level of TORO performance. Invariably, such a defect will be noticed in a residential product within one year after purchase. Recognizing this possibility, Toro has established a simple guarantee policy and procedure that is intended to assure customer satisfaction. This guarantee statement is as follows:

The Toro Promise

A Full One Year Warranty

The Toro Company promises to repair any TORO Product if defective in materials or workmanship. The following time periods from the date of purchase apply:

Residential Product . . . . . 1 year
Residential Products Used Commercially . . 45 days

The costs of parts and labor are included, but the customer pays the transportation costs. Just return any residential product to an Authorized TORO Service Dealer or TORO Distributor.

Should the customer feel that a product is defective and wish to rely on The Toro Promise, the following procedure is recommended:

1. Contact any Authorized TORO Service Dealer or Distributor, but preferably the dealer or distributor from whom you purchased the product.
2. He will instruct you to either return the product to him, or tell you the name and address of your nearest Authorized TORO Service Dealer or Distributor if the product is to be returned to such a dealer or distributor.
3. Bring the product and your original sales slip, or other evidence of purchase date, to the service dealer or distributor.
4. The servicing dealer or distributor will inspect the unit, advise you whether the product is defective and, if so, make all repairs necessary to correct the defect without extra charge to the customer.

If for any reason the customer is dissatisfied with the dealer's or distributor's analysis of the defect or the service he performs, he can contact us. Write:

TORO "Customer Care" Department
8111 Lyndale Avenue South
Minneapolis, Minnesota 55420

V14-670

MAINTENANCE RECORD

Date	Hours Used	Oil Change	Air Cleaner Service	Lubrication	Winter Storage	Spring Service	Spark Plug Gap