1976

FORM NO. 3310-782

TORO®

MODEL NO. 20673 – 600001 & UP

PARTS CATALOG

21" S.P. GRASSMASTER™ KEY-LECTRIC®

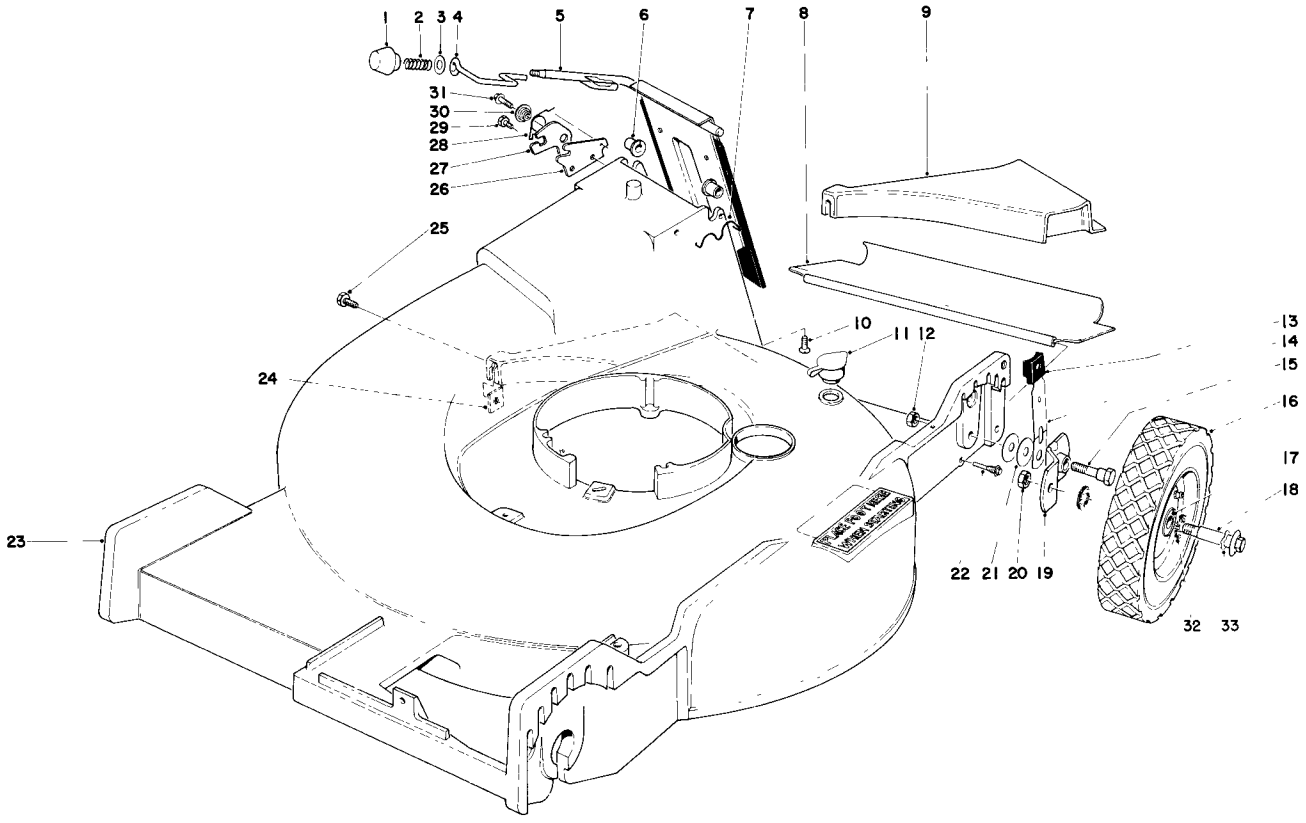

HOUSING ASSEMBLY

Ref. No.	Part No.	Description	No. Used
1	233-37	Knob	1
2	23-0920	Spring – Compression	1
3	23-1120	Washer	1
4	23-0940	Latch Door	1
5	23-0990	Door Handle	1
6	23-0880	Bushing	2
7	23-0200	Door Retainer	1
8	23-0560	Rear Safety Shield	1
9	23-0360	Insert Rear	1
10	32144-17	Screw Flat Hd.	2
11	6-4500	Washout Plug	1
12	32146-5	Locknut	2
13	25-7740	Knob Arm	2
14	25-8000	Spring Arm	2

Ref. No.	Part No.	Description	No. Used
15	25-3440	Pivot Screw	2
16	26-2960	Wheel & Tire Assembly Rear (Incl. Ref. # 17)	2
17	251-180	Bearing	4
18	3-2652	Wheel Bolt – Rear	2
19	24-7710	Pivot Arm "A"	1
*	23-9120	Pivot Arm "B"	1
20	32146-12	Locknut	2
21	5-4460	Pivot Washer	4
22	8-6160	Pivot Screw	2
23	6-4659	Housing	1
24	26-0660	Nut Special	1
25	32104-114	Screw Self Tapping	1
26	23-1040	Latch Plate	1

*Not Illustrated

COPYRIGHT 1975 BY
The Toro Company
MINNEAPOLIS, MINN. 55420 – U.S.A.

PRICE $1.00

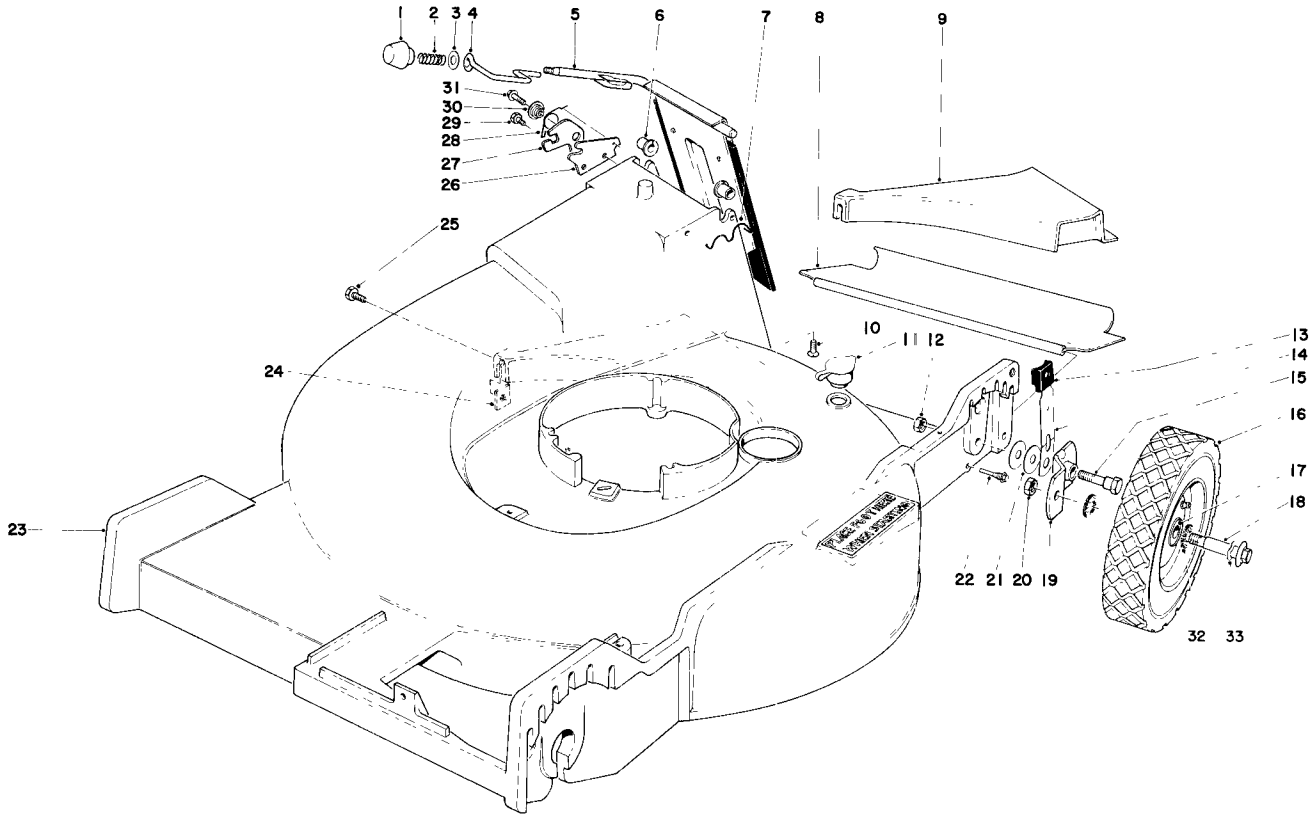

HOUSING ASSEMBLY (Continued)

Ref. No.	Part No.	Description	No. Used
27	23-1190	Latch Safety	1
28	23-1200	Spring Torsion	1
29	32104-17	Screw Hex Hd.	1
30	23-1180	Spacer Latch	1

Ref. No.	Part No.	Description	No. Used
31	11-9760	Screw Thd. Forming	1
32	26-7500	Felt Washer	4
33	3290-393	Wave Washer	2
*	26-9510	Replacement Stud Kit	1

*Not Illustrated

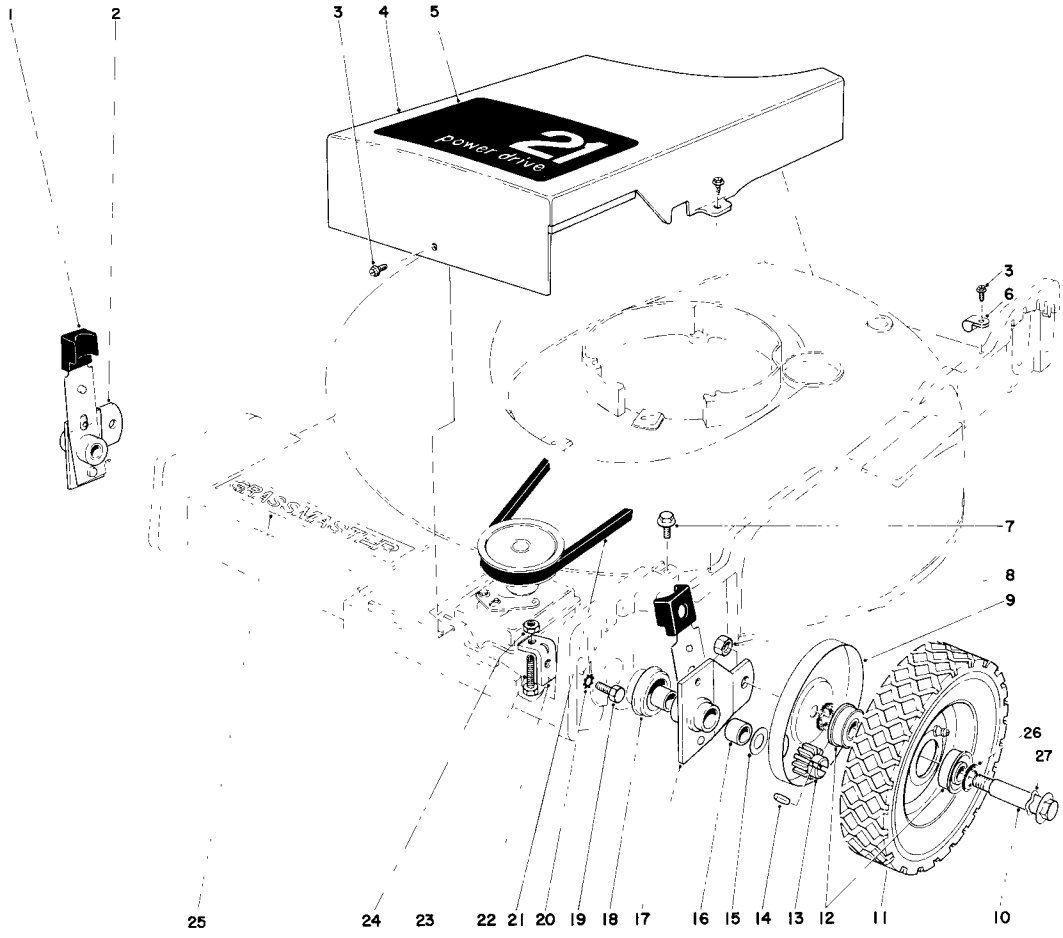

FRONT WHEEL AND PIVOT ARM ASSEMBLY

Ref. No.	Part No.	Description	No. Used
1	25-7740	Knob – Arm	2
2	25-8190	Pivot Arm (Incl. Ref. # 16)	1
3	12-5450	Screw Special	4
4	23-0510	Cover – Belt	1
5	26-0690	Decal – Belt Cover	1
6	2412-52	Cable Clamp	1
7	32144-11	Screw Hex Hd.	1
8	32146-12	Locknut	2
9	23-0280	Cover – Wheel	2
10	26-4430	Wheel Bolt Front	2
11	26-3010	Wheel & Tire Assembly Front (Incl. Ref. #12)	2
12	251-180	Bearing	4
13	18-9690	Pinion Gear	2

Ref. No.	Part No.	Description	No. Used
14	3284-3	Coil Pin	2
15	18-9810	Washer Thrust	2
16	256-206	Bushing	4
17	25-8180	Pivot Arm (Incl. Ref. # 16)	1
18	23-0380	End Cap	2
19	322-5	Capscrew	1
20	3255-8	Lockwasher	1
21	24-9730	V-Belt	1
22	25-7560	Bracket – Gear Box	1
23	3-7281	Screw	1
24	32146-17	Jam Nut	1
25	23-0930	Decal – Grassmaster	1
26	26-7500	Felt Washer	4
27	3290-393	Wave Washer	2

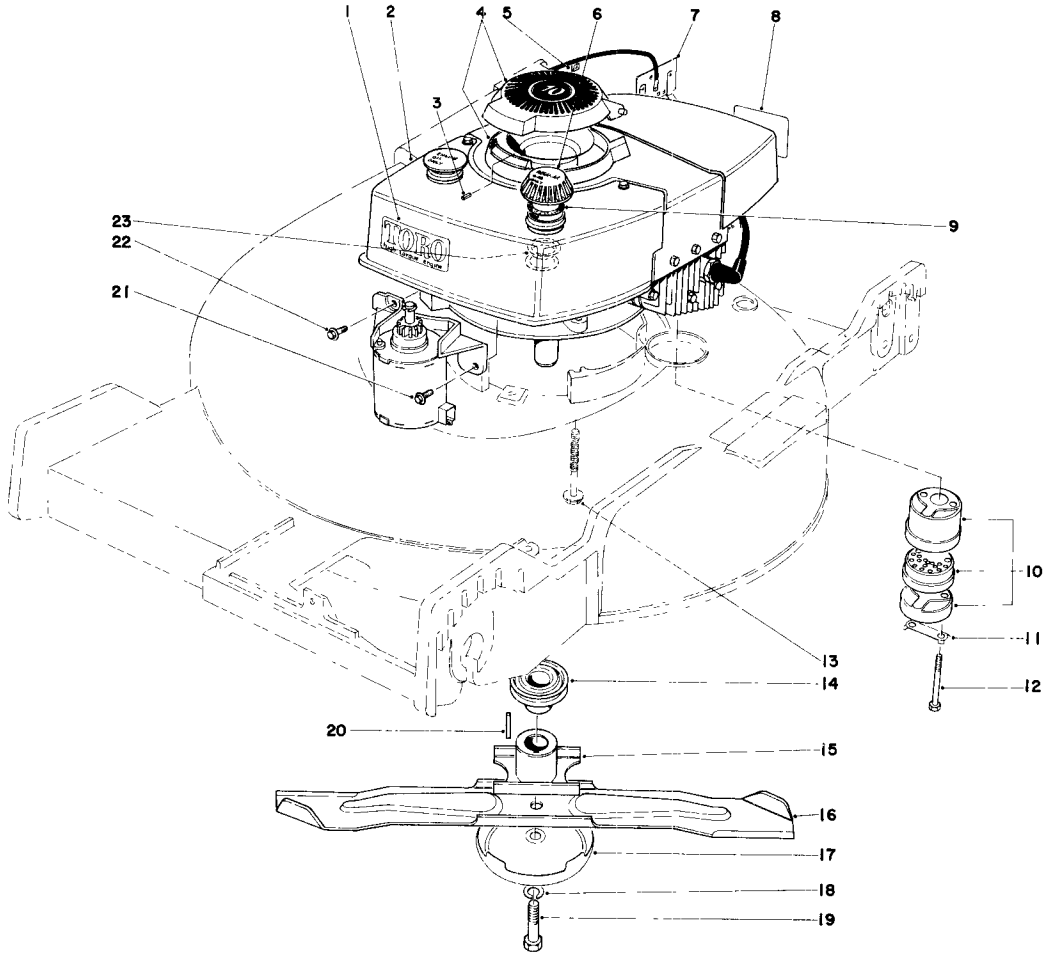

ENGINE ASSEMBLY

Ref. No.	Part No.	Description	No. Used
1	23-1260	Decal – High Torque	1
2	221-517	Engine	1
3	32121-90	Spring Pin	1
4	26-0850	Cover Assembly	1
5	25-1570	Clip – Wire	2
6	20-2860	Gas Cap Assembly (Incl. Ref. # 9 & 23)	1
7	24-9770	Switch & Junction Box	1
8	20-2710	Decal – Maintenance	1
9	2210-144	Gasket	2
10	5-4769	Muffler Assembly (Incl. Ref. # 11 & 12)	1
11	3-5094	Locking Clip	1

Ref. No.	Part No.	Description	No. Used
12	321-20	Screw Hex Hd.	2
13	11-0580	Screw	3
14	21-5580	Pulley – Driver	1
15	26-0770	Blade Retainer	1
16	26-0880	Blade	1
17	8-4240	Anti-Scalp Cup	1
18	3253-22	Lockwasher	1
19	26-0670	Screw Blade	1
20	21-5060	Key Square	1
21	12-3270	Screw – Special	1
22	11-9760	Screw – Special	1
23	2210-143	Baffle – Gas Cap	1

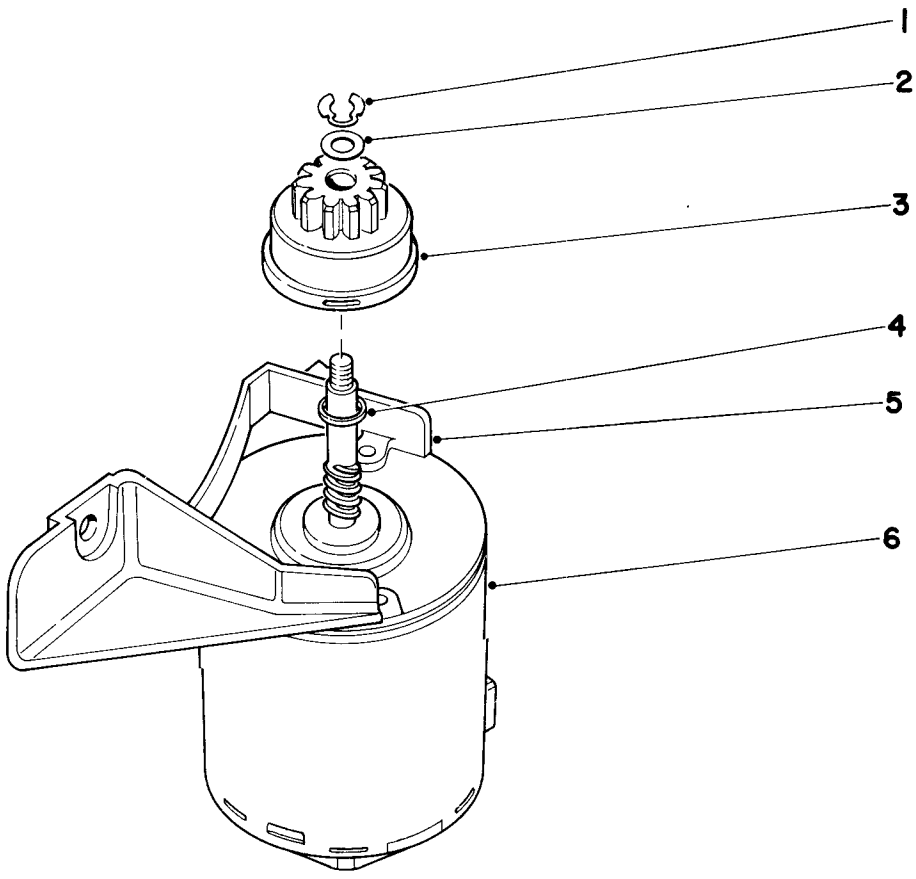

STARTER MOTOR

Ref. No.	Part No.	Description	No. Used
1	32151-47	Retaining Ring	1
2	25-3970	Washer	1
3	25-3960	Pinion Assembly	1

Ref. No.	Part No.	Description	No. Used
4	23-9590	Spacer	1
5	218-472	Mounting Bracket	1
6	25-3950	Starter Motor	1
*	25-3940	Starter Motor Assembly (Incl. Ref. # 1-6)	1

*Not Illustrated

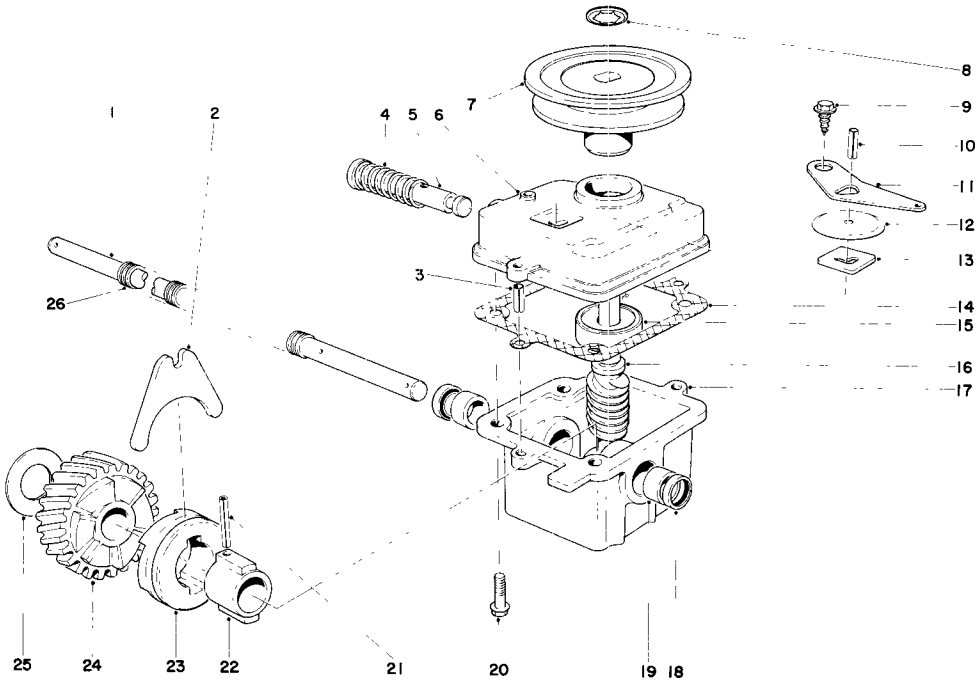

GEAR CASE ASSEMBLY

Ref. No.	Part No.	Description	No. Used
1	24-7740	Drive Shaft	1
2	5-3247	Shifter Fork	1
3	32121-1	Roll Pin	2
4	3-0731	Spring	1
5	5-3248	Shifter Rod	1
6	5-3283	Cover – Gear Case	1
7	20-2780	Pulley	1
8	3290-346	Push On Retainer	1
9	32140-64	Self Tapping Screw	1
10	32121-23	Roll Pin	1
11	5-3252	Shifter Arm	1
12	3-2615	Transmission Dust Cover	1
13	3-0681	Latch Plate	1
14	3-0734	Gasket – Gear Case	1

Ref. No.	Part No.	Description	No. Used
15	251-144	Ball Bearing	1
16	18-9700	Shaft – Worm	1
17	5-4459	Gear Case (Incl.Ref. # 18 & 19)	1
18	253-86	Oil Seal	2
19	256-110	Bushing	2
20	11-9760	Screw	4
21	32121-88	Coil Pin	1
22	3-0721	Sleeve	1
23	19-5660	Clutch Jaw	1
24	18-9740	Helical Gear	1
25	3-0724	Thrust Washer	1
26	24-8690	Cover – Drive Shaft	1
*	26-0650	Gear Case Assembly	1

*Not Illustrated

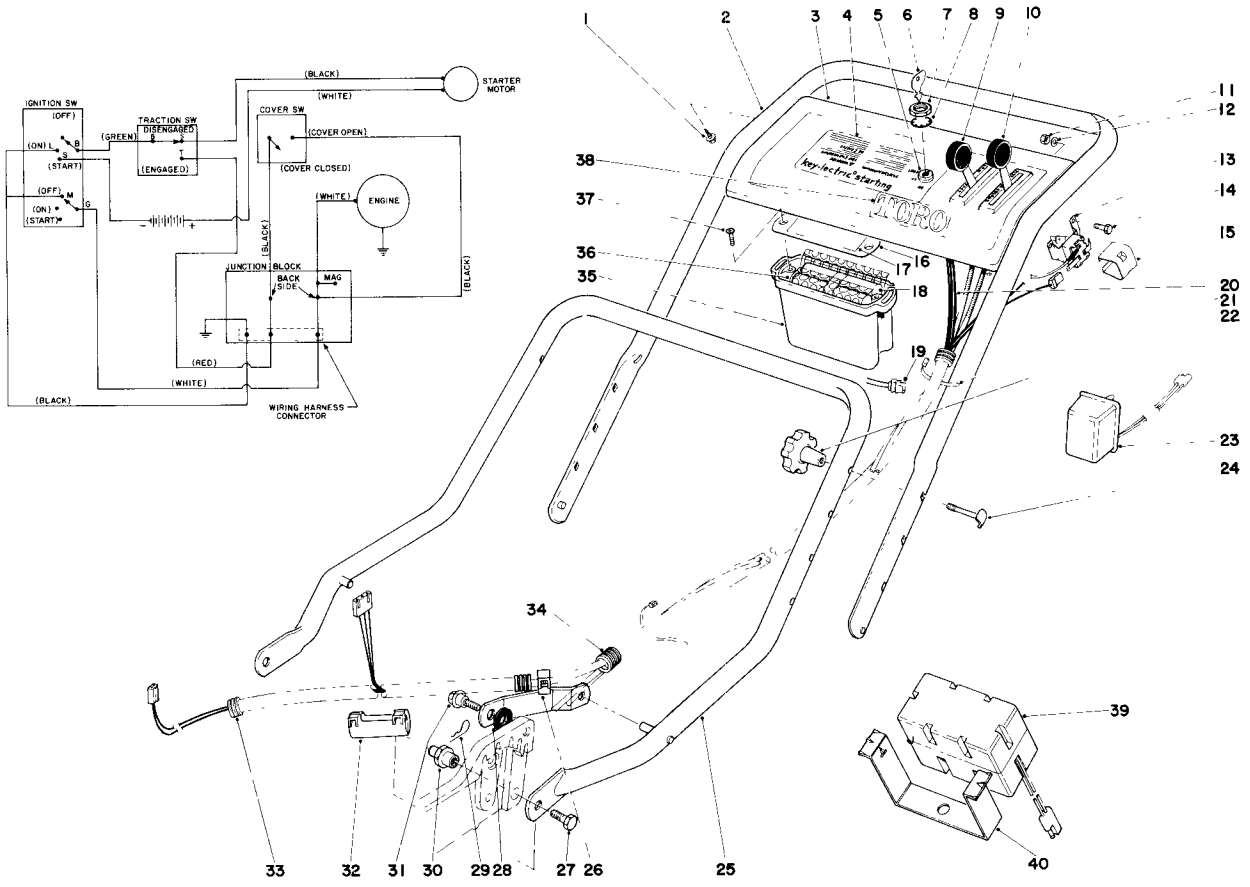

HANDLE ASSEMBLY

Ref. No.	Part No.	Description	No. Used
1	32104-76	Self Tapping Screw	4
2	23-0580	Upper Handle	1
3	23-0590	Control Plate	1
4	26-0820	Decal – Control Plate	1
5	23-0660	Starter Switch	1
6	218-412	Key (Set of 2)	1
7	218-461	Hex Nut	1
8	3254-5	Lockwasher	1
9	26-0710	Control – Throttle	1
10	26-4760	Control – Traction	1
11	3296-9	Hex Nut	2
12	3256-21	Washer	2
13	24-9760	Switch – Safety	1
14	3290-124	Screw Hex Hd.	2
15	25-1590	Cover Switch	1
16	6-8230	Cover	1
17	25-4020	Decal – Battery	1
**18	24-7750	Battery Pack Assembly (Incl. Ref. 16-19 & 35-37)	1
19	11-3790	Plug & Wire Assembly	1
20	25-0100	Wiring Harness	1
21	3290-378	Cable Tie	4
22	19-4050	Handle Release Knob	2

Ref. No.	Part No.	Description	No. Used
**23	6-9780	Battery Charger (Used w/item No. 18)	1
**23	23-7510	Battery Charger (Used w/item No. 39)	1
24	6-6330	Handle Screw	2
25	26-0740	Lower Handle	1
26	2412-48	Ring Fitting	5
27	322-5	Capscrew	2
28	3-3287	Latch Spacer	2
29	3290-255	Hairpin Cotter	2
30	12-2080	Handle Pivot Nut	2
31	5-2490	Shoulder Screw	2
32	2412-49	Breakout Fitting	1
33	25-1180	Lower Wiring Harness Cover	1
34	25-1190	Upper Wiring Harness Cover	1
35	6-9750	Container – Battery Pack	1
36	6-8320	Spacer – Battery	1
37	32104-93	Screw Self Tapping	2
38	20-4690	Decal Toro	1
*	5-3556	Starter Rope	1
*	26-0830	Loose Parts	1
**39		Battery Gates	1
40	23-7630	Battery Adapter	1

*Not Illustrated

**Note: Check as to which battery is used on your unit before ordering Battery Charger Ref. #23.

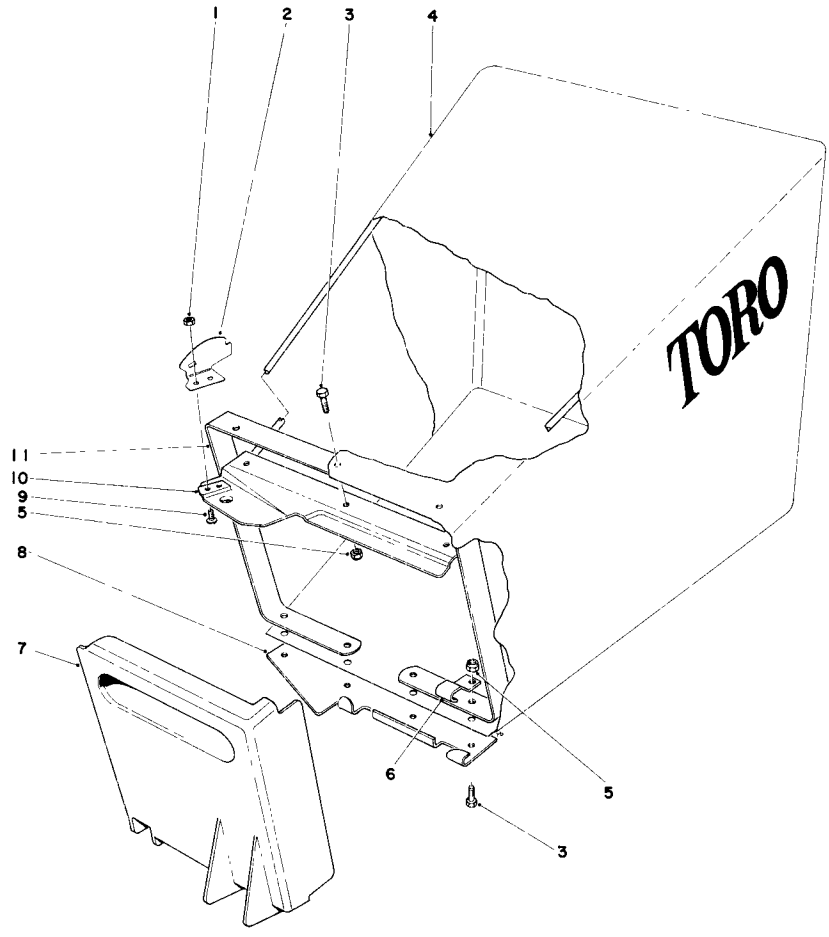

GRASS BAG ASSEMBLY

Ref. No.	Part No.	Description	No. Used
1	32146-17	Locknut	2
2	23-1060	Latch Bag	1
3	3290-321	Hex Hd. Machine Screw	7
4	6-1389	Grass Bag	1
5	32153-1	Locknut	7
6	23-5100	Support Bracket	1

Ref. No.	Part No.	Description	No. Used
7	23-1140	Bag Door	1
8	23-1150	Door Bracket	1
9	25-3120	Screw	2
10	25-3230	Bag Frame	1
11	23-1110	Bag Support	1
*	6-5689	Grass Bagging Kit (Incl. Ref. 1 thru 11)	1

*Not Illustrated

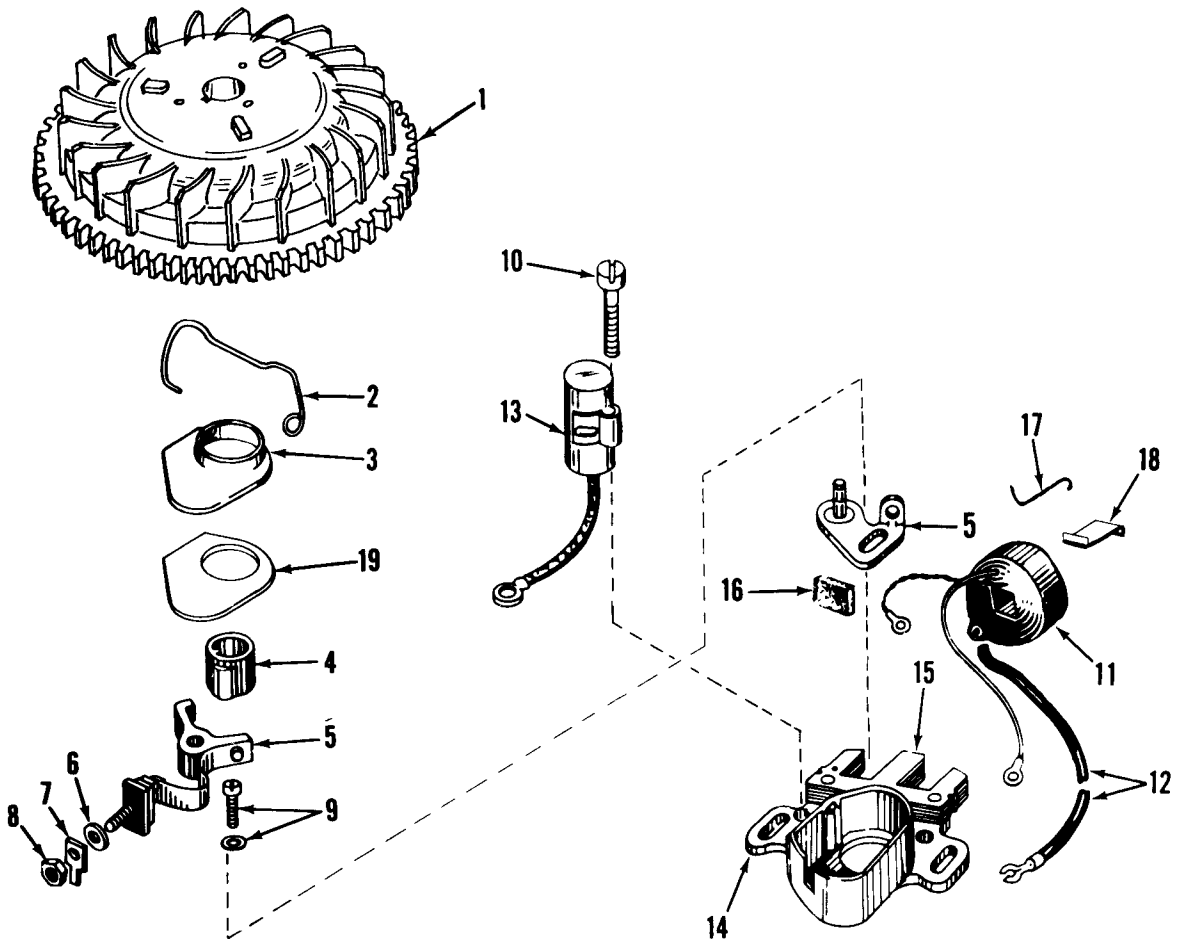

MAGNETO NO. 610772*

Ref. No.	Part No.	Description	No. Used
1	610757	Flywheel	1
2	30551	Spring, Breaker Box	1
3	30550	Cover, Breaker Box Dust	1
4	30552	Cam, Breaker	1
5	30547A	Contact Assembly, Breaker	1
6	610385	Washer, Terminal	1
7	33356	Tab, Ground Terminal	1
8	610408	Nut, Terminal	1
9	29181	Screw & Washer, Breaker	1
10	610593	Screw, Condenser Fastening	1

Ref. No.	Part No.	Description	No. Used
11	30560A	Coil Assembly (Incl. No. 12)	1
12	30554	Wire, Lead	1
13	30548A	Condenser	1
14	30545	Core & Plate	1
15	30561A	Starter Assembly (Incl. Nos. 2, 3, 5 thru 14 & 16 thru 19)	1
16	30549	Felt, Cam Wiper	1
17	31311	Clip, Coil Locking	1
18	29629	Spring, Coil Wedge	1
19	32052	Gasket, Dust Cover	1

*The complete magneto is not available as an assembly. The magneto number is shown for reference purposes only. Order component parts individually, as shown in parts list.

ENGINE TECUMSEH MODEL NO. TNT 100-10046

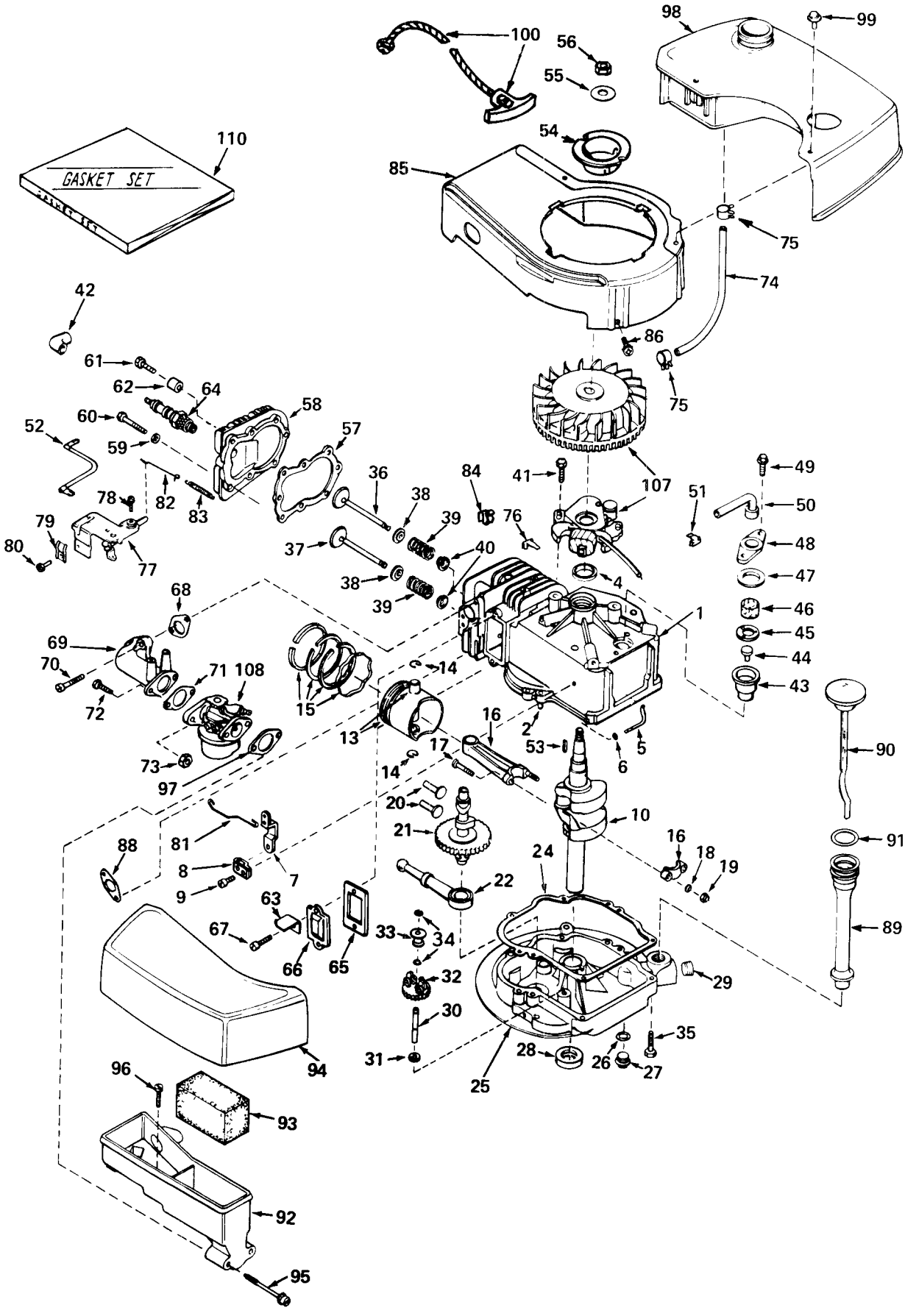

ENGINE TECUMSEH MODEL NO. TNT 100-10046

Ref. No.	Part No.	Description	No. Used
1	33883	Cylinder Assembly (Incl. Nos. 2, 4 & 87)	1
2	26727	Pin, Dowel	2
4	29183	Seal, Oil	1
5	30589	Rod, Governor (Incl. No. 6)	1
6	28277	Washer, Flat	1
7	32651	Lever, Governor	1
8	31335	Clamp, Governor Lever	1
9	650548	Screw, Hex Slotted Washer Hd.	1
10	33884	Crankshaft	1
13	32603	Piston & Pin Assembly (Incl. 2 of No. 14) (Std.)	1
13	32604	Piston & Pin Assembly (Incl. 2 of No. 14) (.010 Oversize)	1
13	32605	Piston & Pin Assembly (Incl. 2 of No. 14) (.020 Oversize)	1
14	20381	Ring, Piston Pin Retaining	2
15	32606	Ring Set, Piston (Std.)	1
15	32607	Ring Set, Piston (.010 Oversize)	1
15	32608	Ring Set, Piston (.020 Oversize)	1
16	30963B	Rod Assembly Connecting (Incl. Nos. 17, 18 & 19)	1
17	26706	Bolt, Connecting Rod	2
18	20747	Washer, Connecting Rod Bolt	2
19	27573	Nut, Connecting Rod	2
20	27241	Lifter, Valve	2
21	34014	Camshaft (Mech. Compression Release)	1
22	29914	Pump Assembly, Oil	1
24	*26750A	Gasket, Mounting Flange	1
25	33898	Flange Assembly, Mounting (Incl. Nos. 27 thru 30)	1
26	*28833	Gasket, Oil Drain Plug	1
27	27244	Plug, Oil Drain	1
28	26208	Seal, Oil	1
29	33885	Plug, Oil Drain	1
30	30574	Shaft, Mechanical Governor	1
31	30590A	Washer, Flat	1
32	30591	Gear Assembly, Governor	1
33	30588A	Spool, Governor	1
34	29193	Ring, Retaining	2
35	650488	Screw, Hex Hd. Sems	6
36	29314A	Valve, Intake (Incl. Nos. 38 thru 40) (Std.)	1
36	29315B	Valve, Intake (Incl. Nos. 38 thru 40) (1/32" Oversize)	1
37	29313B	Valve, Exhaust (Incl. Nos. 38 thru 40) (Std.)	1
37	29315B	Valve, Exhaust (Incl. Nos. 38 thru 40) (1/32" Oversize)	1
38	31671	Cap, Upper Valve Spring	2
39	31672	Spring, Valve	2
40	31673	Cap, Lower Valve Spring	2
41	650489	Screw, Hex Hd. Sems w/Flatwasher	2
42	610118	Cover, Spark Plug	1
43	33731	Body, Breather Tube	1
44	33732	Valve, Check	1
45	33733	Baffle, Breather	1
46	33734	Element, Breather	1
47	*33735	Gasket, Breather	1
48	33737	Cover, Breather	1
49	650768	Screw, Hex Hd. w/Conical Washer	2

Ref. No.	Part No.	Description	No. Used
50	33886	Tube, Breather	1
51	33887	Clip, Breather Tube	1
52	33888	Wire, Ground	1
53	27247	Key, Flywheel	1
54	32723	Pulley, Starter	1
55	650763	Washer, Belleville	1
56	650607	Nut, Flywheel	1
57	*33015	Gasket, Cylinder Head	1
58	33016	Head, Cylinder	1
59	26073	Washer	5
60	6021	Screw, Hex Hd. Cap	5
61	650697	Screw, Hex Hd. Cap	3
62	33892	Spacer	3
63	30593	Clip, Magneto Wire	1
64	33636	Plug, Spark (Champion J-8 or Equivalent)	1
65	*27234	Gasket, Valve Spring Cover	1
66	32755	Cover, Valve Spring Box	1
67	650128	Screw, Fil. Slotted Hd. Sems	2
68	*30188	Gasket, Intake Pipe	1
69	33004	Pipe, Intake	1
70	650451	Screw, Fil. Flex Hd. Self-Locking	2
71	*31688	Gasket, Carburetor	1
72	6202	Screw, Hex Hd. Cap Sems	2
73	29752	Nut & Lockwasher	2
74	30705	Line, Fuel	1
75	26460	Clamp, Fuel Line	2
76	29443	Clip, Fuel Line	1
77	33889	Control Assembly, Speed	1
78	650783	Screw, Hex Washer Hd. Thread Forming, Sems	1
79	27793	Clip, Conduit	1
80	28942	Screw, Slotted Hex Hd. Sems	1
81	33133	Link, Governor	1
82	33295	Link, Governor Spring	1
83	33890	Spring, Governor	1
85	33907	Housing, Blower	1
86	650497	Screw, Flex Pan Hd.	2
88	*30081	Gasket, Exhaust	1
89	33893	Tube, Oil Filler	1
90	33894	Dipstick, Oil (Incl. No. 91)	1
91	33590	"O" Ring	1
92	33895	Body, Air Cleaner	1
93	33896	Filter, Air Cleaner	1
94	33897	Cover, Air Cleaner	1
95	650762	Screw, Fil. Hd. Mach., Sems	2
96	650784	Screw, Hex Hd. w/Flatwasher Thread Forming	1
97	*33051	Gasket, Air Cleaner	1
98	33904	Tank, Fuel	1
99	28763	Screw, Hex Washer Hd. Thread Forming	2
100	590343	Rope Assembly, Starter	1
107	610772	Magneto (The complete magneto is not available as an assembly. The magneto no. is shown for reference purposes only. Order component parts individually, as shown in parts list.)	1
108	631784A	Carburetor (Incl. No. 71)	1
110	33906	Gasket Set (Incl. items marked *)	1

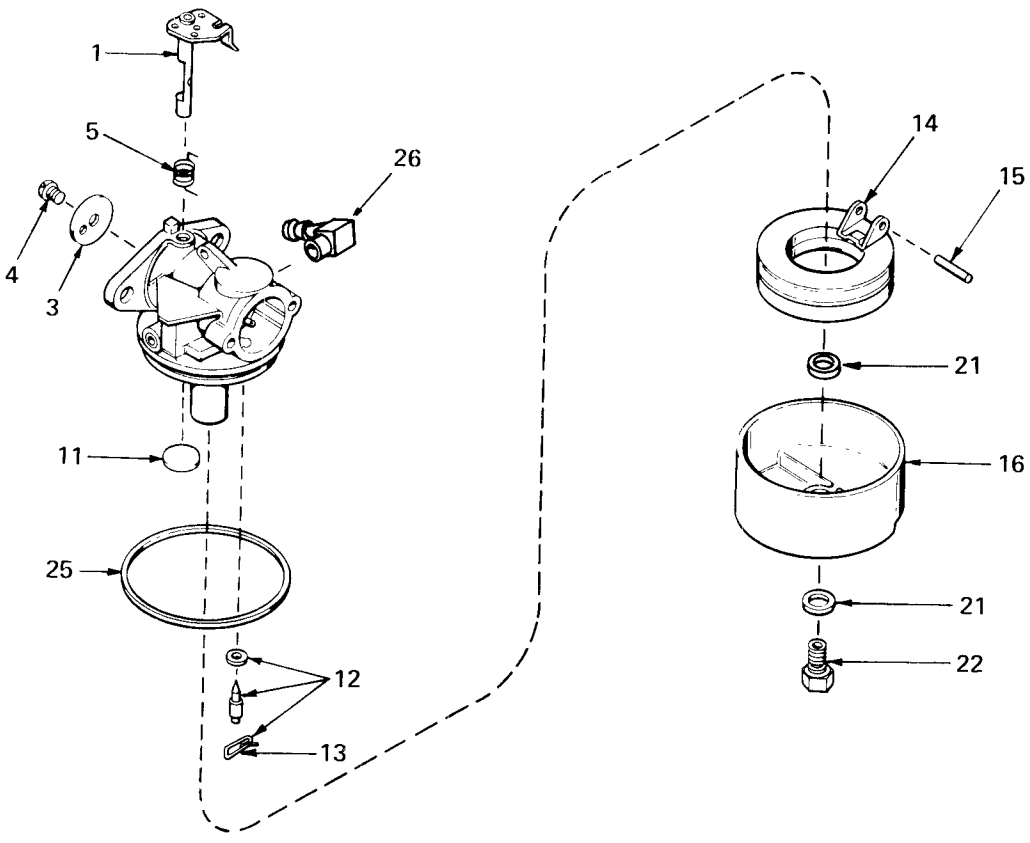

CARBURETOR NO. 631784A

Ref. No.	Part No.	Description	No. Used
1	631615	Shaft & Lever Assembly, Throttle	1
3	631616	Shutter, Throttle	1
4	650506	Screw	1
5	630731	Spring, Return	1
11	631027	Plug, Welch	1
12	631021	Inlet Needle, Seat & Clip Assembly (Incl. No. 13)	1

Ref. No.	Part No.	Description	No. Used
13	631022	Clip, Inlet Needle	1
14	631023	Float, Carburetor	1
15	631024	Shaft, Float	1
16	631700	Bowl, Float	1
21	631334	Gasket, Bowl-to-body	2
22	631935	Nut, Float Bowl	1
25	631028	Gasket, Bowl-to-body	1
26	631807	Fitting, Fuel Inlet	1

PRODUCT CHANGES

In an effort to make improvements available to TORO owners as quickly as possible, minor changes are incorporated into Toro's products from time to time that do not become immediately shown in the Parts Catalog. If such a change apparently has been made in your unit, which is not reflected in your manual, see your TORO Distributor or his Authorized TORO Service Dealer for information and part numbers.

IDENTIFICATION AND ORDERING

Model and Serial Numbers

The Mower has two identification numbers: a model number and a serial number. The two numbers are stamped on a decal which is located on left side of the mower housing. In any correspondence concerning the mower, supply model and serial numbers to assure that correct information and replacement parts are obtained.

To order replacement parts from an Authorized TORO Service Dealer, supply the following information.

1. Model and serial numbers of the mower.
2. Part number, description, and quantity of part(s) desired.

NOTE: Do not order by reference number if a parts catalog is being used; use the PART NUMBER.

Keep Your TORO All Toro Genuine TORO PARTS & ACCESSORIES ***Insist on Genuine Toro Parts***

THE TORO PROMISE

It is Toro's policy to design and produce TORO products to provide our customers with a high level of performance and durability in normal operation. Our products, however, are produced in high volume, and it is inevitable that occasionally a unit will reach a customer with a defect in materials or workmanship which causes the unit to fall below the normal high level of TORO performance. Invariably, such a defect will be noticed in a residential product within one year after purchase. Recognizing this possibility, Toro has established a simple guarantee policy and procedure that is intended to assure customer satisfaction. This guarantee statement is as follows:

The Toro Promise

A Full One Year Warranty

The Toro Company promises to repair any TORO Product if defective in materials or workmanship. The following time periods from the date of purchase apply:

Residential Product . . . . . 1 year
Residential Products Used Commercially . . 45 days

The costs of parts and labor are included, but the customer pays the transportation costs. Just return any residential product to an Authorized TORO Service Dealer or TORO Distributor.

Should the customer feel that a product is defective and wish to rely on The Toro Promise, the following procedure is recommended:

1. Contact any Authorized TORO Service Dealer or Distributor, but preferably the dealer or distributor from whom you purchased the product.
2. He will instruct you to either return the product to him, or tell you the name and address of your nearest Authorized TORO Service Dealer or Distributor if the product is to be returned to such a dealer or distributor.
3. Bring the product and your original sales slip, or other evidence of purchase date, to the service dealer or distributor.
4. The servicing dealer or distributor will inspect the unit, advise you whether the product is defective and, if so, make all repairs necessary to correct the defect without extra charge to the customer.

If for any reason the customer is dissatisfied with the dealer's or distributor's analysis of the defect or the service he performs, he can contact us. Write:

TORO "Customer Care" Department
8111 Lyndale Avenue South
Minneapolis, Minnesota 55420

MAINTENANCE RECORD

Date	Hours Used	Oil Change	Air Cleaner Service	Lubrication	Winter Storage	Spring Service	Spark Plug Gap

MAINTENANCE RECORD

Date	Hours Used	Oil Change	Air Cleaner Service	Lubrication	Winter Storage	Spring Service	Spark Plug Gap

MAINTENANCE RECORD

Date	Hours Used	Oil Change	Air Cleaner Service	Lubrication	Winter Storage	Spring Service	Spark Plug Gap

Litho in U.S.A.