FORM NO. 01-505-0100

TORO®

MODEL NO. 44550 - 20101 & UP
MODEL NO. 44555 - 20101 & UP

PARTS CATALOG

YARD CHIPPER 1325

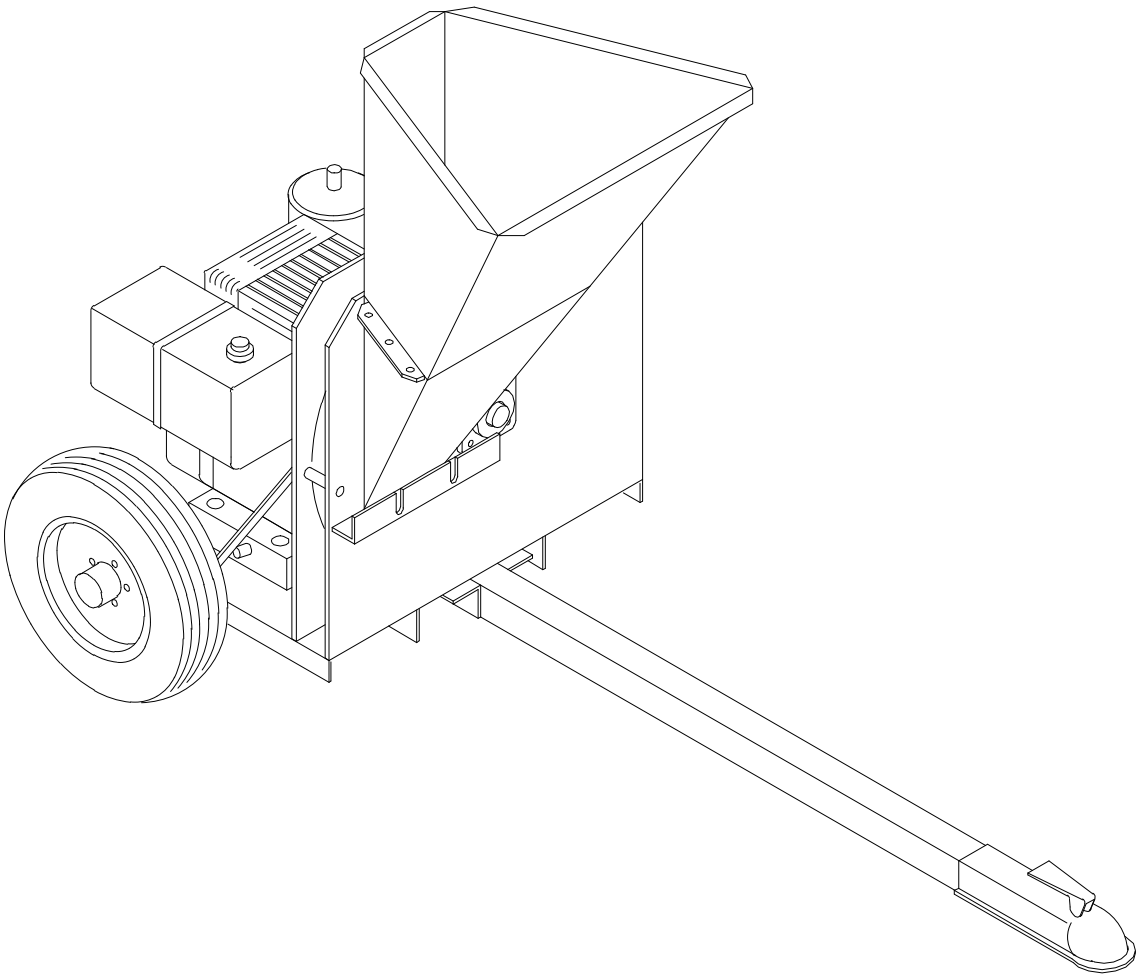

© The TORO Company - 1992
All Rights Reserved

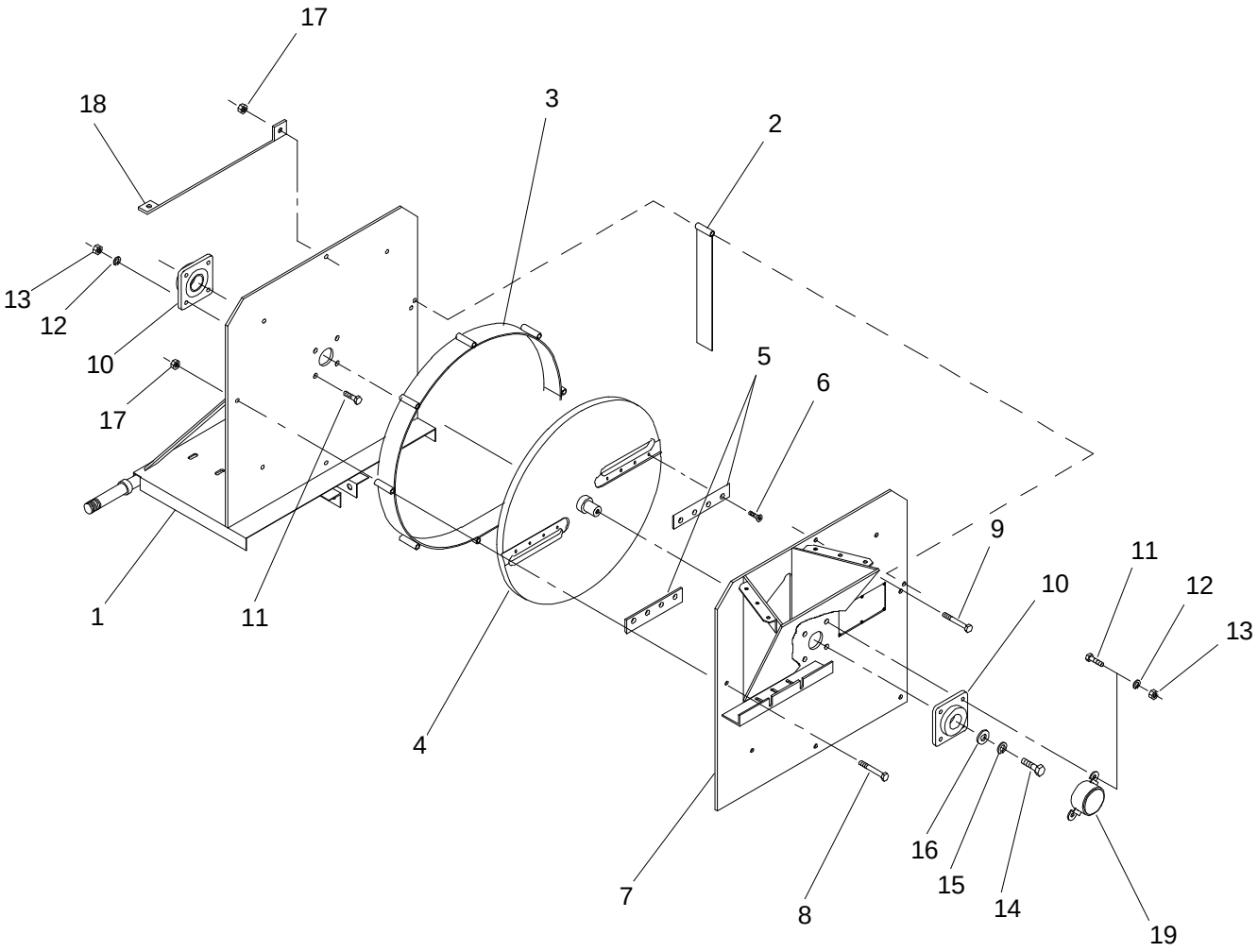

MAIN FRAME ASSEMBLY - MODEL 44550

325-001

Ref. No.	Part No.	Description	No. Used
1.	32-505-0124	Body Assembly	1
2.	32-505-0131	Discharge Guard Assembly	1
3.	32-505-0141	Ring Assembly	1
4.	32-505-0113	Cutter Wheel	1
5.	32-504-0402	Blade	2
6.	01-158-0180	Capscrew - Flat Hd. Socket, 1/4" - 20 x 3/4"	8
7.	32-505-0154	Front Side Assembly	1
8.	01-178-0622	Capscrew - Hex Hd., 3/8" - 16 x 2-3/4"	8
9.	01-178-0624	Capscrew - Hex Hd., 3/8" - 16 x 3"	1

Ref. No.	Part No.	Description	No. Used
10.	01-100-0190	Bearing, 1"	2
11.	01-178-0810	Capscrew - Hex Hd., 1/2" - 13 x 1-1/4"	8
12.	01-166-0810	Lock Washer, 1/2"	8
13.	01-188-0813	Hex Nut, 1/2"	8
14.	01-178-0608	Capscrew - Hex Hd., 3/8" - 16 x 1"	1
15.	01-166-0610	Lock Washer, 3/8"	1
16.	01-166-0600	Flat Washer, 3/8"	1
17.	01-192-0190	Whiz Nut, 3/8" - 16	9
18.	32-504-0391	Stiffner	1
19.	32-505-1001	Bearing Cover	1

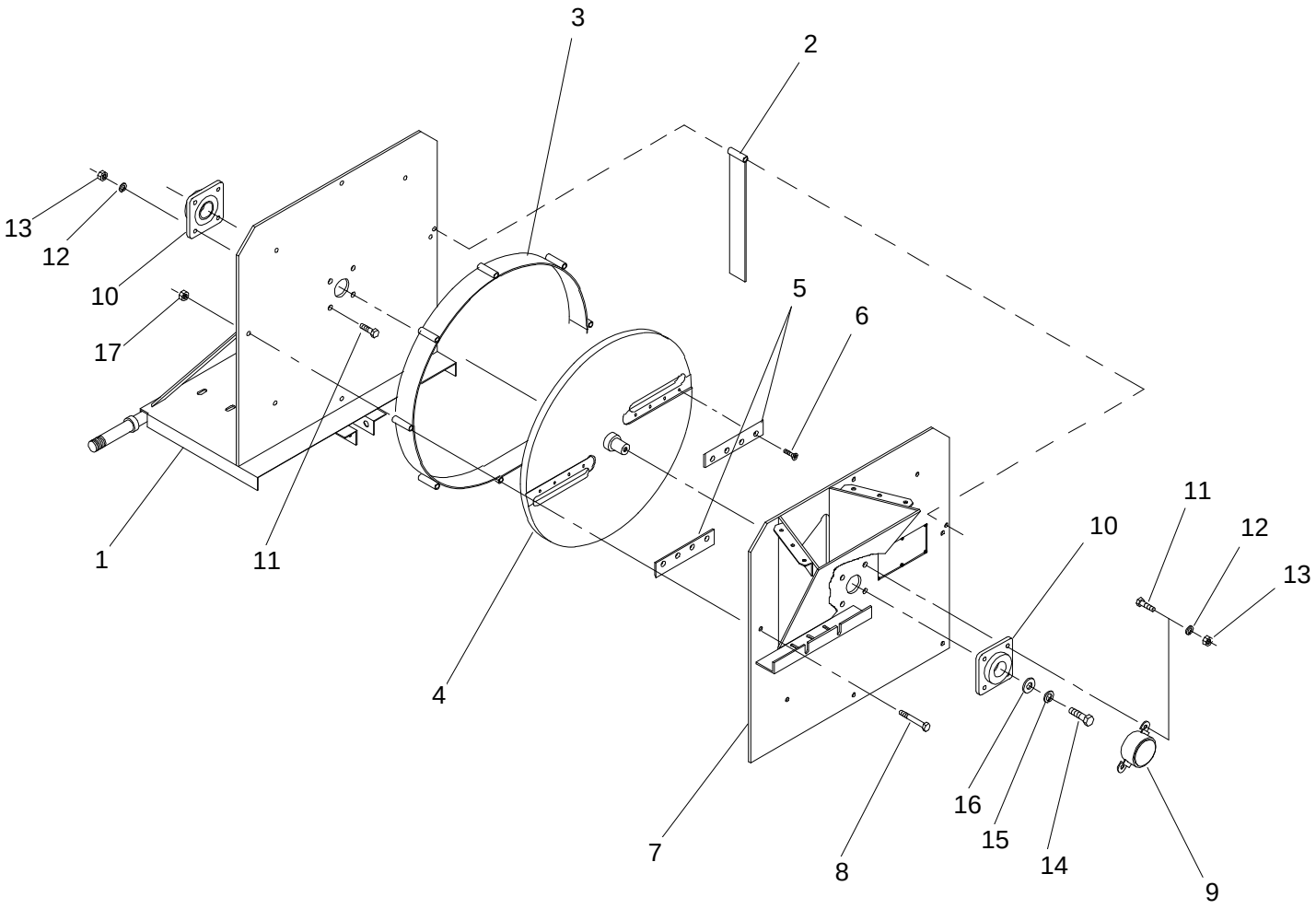

MAIN FRAME ASSEMBLY - MODEL 44555

325-007

Ref. No.	Part No.	Description	No. Used
1.	32-505-0124	Body Assembly	1
2.	32-505-0131	Discharge Guard Assembly	1
3.	32-505-0141	Ring Assembly	1
4.	32-505-0113	Cutter Wheel	1
5.	32-504-0402	Blade	2
6.	01-158-0180	Capscrew - Flat Hd. Socket, 1/4" - 20 x 3/4"	8
7.	32-505-0154	Front Side Assembly	1
8.	01-178-0622	Capscrew - Hex Hd., 3/8" - 16 x 2-3/4"	9
9.	32-505-1001	Bearing Cover	1
10.	01-100-0190	Bearing, 1"	2

Ref. No.	Part No.	Description	No. Used
11.	01-178-0810	Capscrew - Hex Hd., 1/2" - 13 x 1-1/4"	8
12.	01-166-0810	Lock Washer, 1/2"	8
13.	01-188-0813	Hex Nut, 1/2"	8
14.	01-178-0608	Capscrew - Hex Hd., 3/8" - 16 x 1"	1
15.	01-166-0610	Lock Washer, 3/8"	1
16.	01-166-0600	Flat Washer, 3/8"	1
17.	01-192-0190	Whiz Nut, 3/8" - 16	9

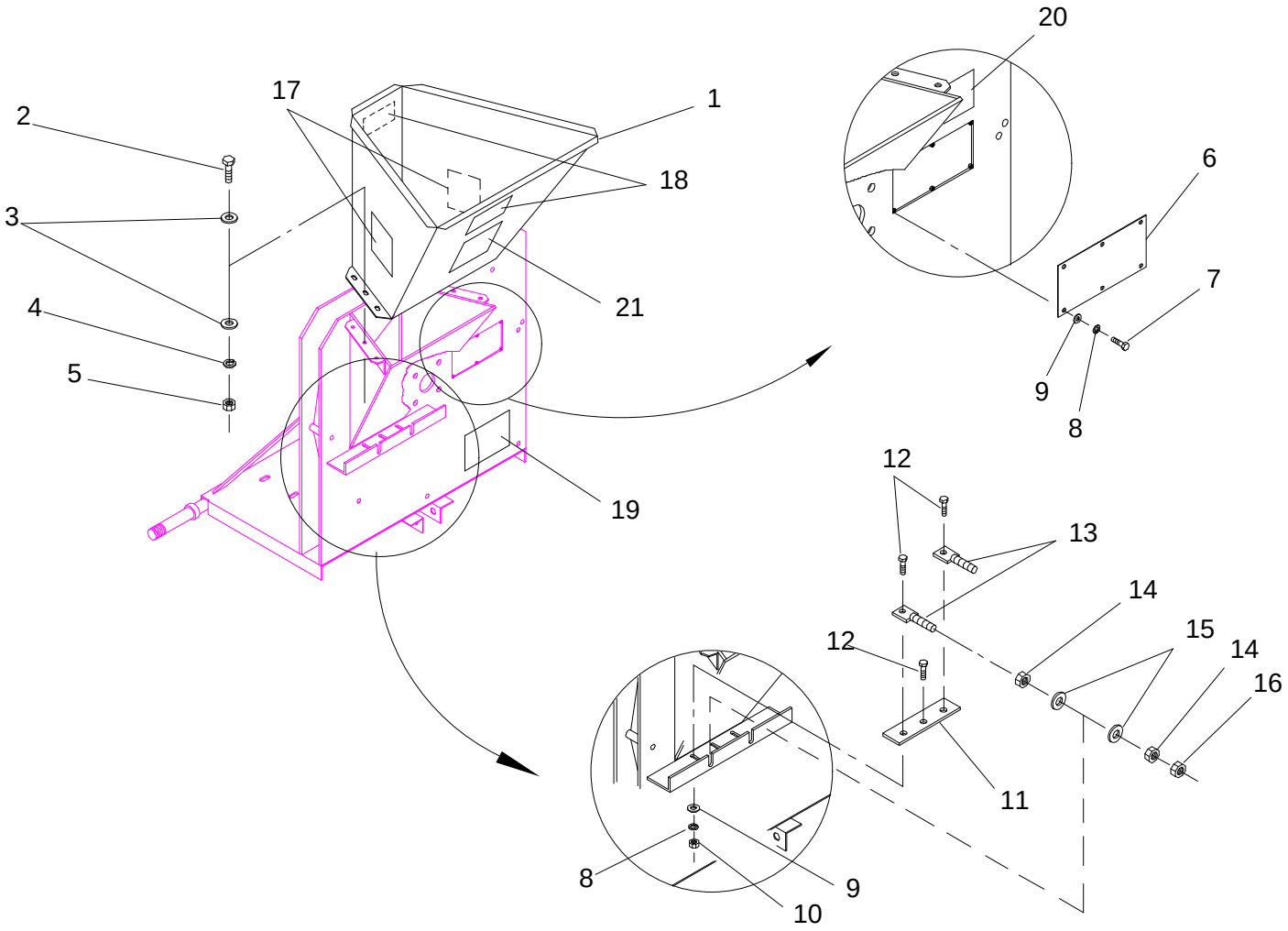

CHUTE EXTENSION & CUTTER BAR

325-002

Ref. No.	Part No.	Description	No. Used
1.	32-505-0181	Chute Extension	1
2.	01-178-0508	Capscrew - Hex Hd., 5/16" - 18 x 1"	6
3.	01-166-0500	Flat Washer, 5/16"	6
4.	01-166-0510	Lock Washer, 5/16"	6
5.	01-188-0518	Hex Nut, 5/16" - 18	6
6.	32-504-0871	Cover Plate	1
7.	01-178-0403	Capscrew - Hex Hd., 1/4" - 20 x 3/8"	6
8.	01-166-0410	Lock Washer, 1/4"	9
9.	01-166-400	Flat Washer, 1/4"	9
10.	01-188-0420	Hex Nut, 1/4" - 20	3

Ref. No.	Part No.	Description	No. Used
11.	32-504-0431	Cutter Bar	1
12.	01-178-0408	Capscrew - Hex Hd., 1/4" - 20 x 1"	3
13.	32-505-0191	Cutter Bar Adjustment Spade	2
14.	01-188-0616	Hex Nut, 3/8" - 16	4
15.	01-166-0600	Flat Washer, 3/8"	4
16.	01-191-0616	Jam Nut, 3/8" - 16	2
17.	01-506-0400	Decal - Danger	2
18.	01-506-0470	Decal - Toro	2
19.	01-506-0350	Decal - Danger	1
20.	01-506-0410	Decal - Danger	1
21.	01-506-0280	Decal - Danger	1

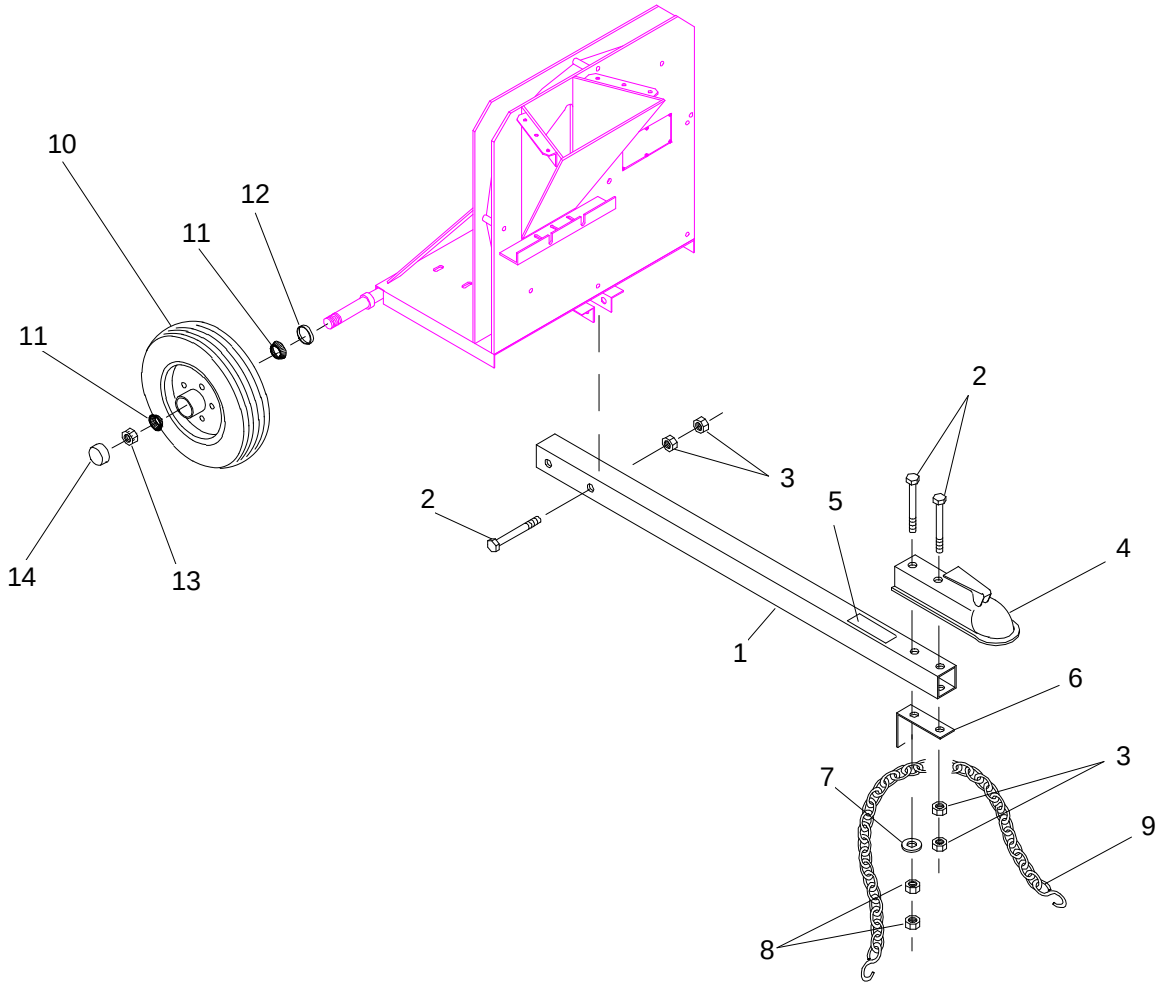

TONGUE & WHEEL ASSEMBLY

325-008

Ref. No.	Part No.	Description	No. Used
1.	32-504-0422	Draw Bar	1
2.	01-178-0728	Capscrew - Hex Hd., 7/16" - 14 x 3-1/2"	4
3.	01-188-0714	Hex Nut, 7/16" - 14	6
4.	01-276-0010	Ball Hitch, 1-7/8"	1
5.	01-506-0630	Decal - Danger	1
6.	32-504-0411	Coupler Bracket	1
7.	01-166-0700	Flat Washer, 7/16"	1
8.	01-191-0714	Jam Nut, 7/16" - 14	2

Ref. No.	Part No.	Description	No. Used
9.	32-502-0991	Chain Assembly	1
10.	01-269-0230	Tire & Wheel	2
11.	01-102-0040	Bearing	4
12.	01-405-0330	Seal	2
13.	01-190-1614	Castle Nut, 1" - 14nf	2
14.	01-286-0040	Grease Cap	2

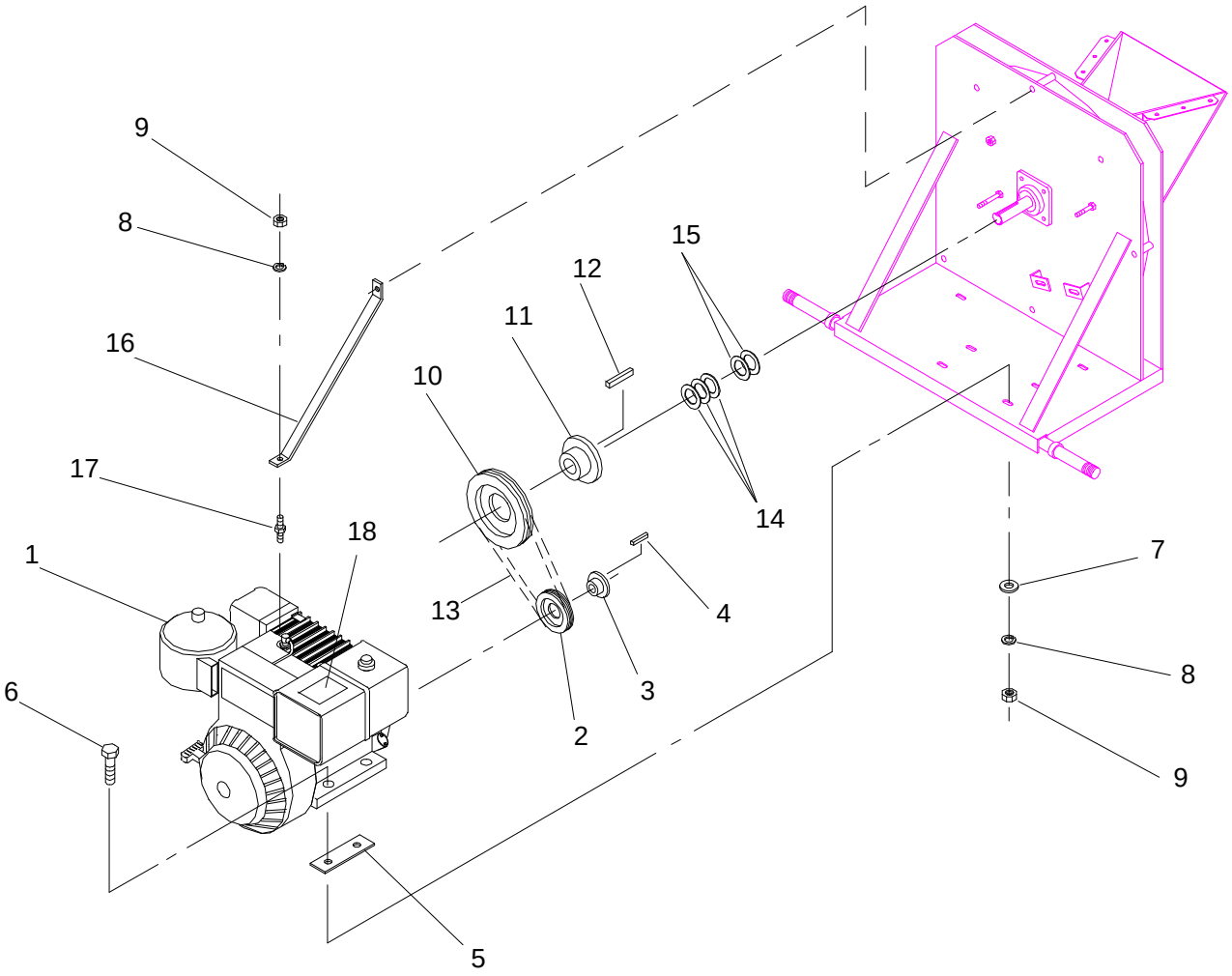

DRIVE ASSEMBLY - MODEL 44550

325-003

Ref. No.	Part No.	Description	No. Used
1.	01-270-1190	Engine, 8hp Briggs & Stratton	1
2.	01-260-0110	Sheave, 3/3V 3.35SH	1
3.	01-260-0280	Bushing, 1" SH	1
4.	82-004-1171	Key, 1/4" Sq. x 1-1/8"	1
5.	32-504-0671	Engine Spacer	2
6.	01-178-0512	Capscrew - Hex Hd., 5/16" - 18 x 1-1/2"	4
7.	01-166-0500	Flat Washer, 5/16"	4
8.	01-166-0510	Lock Washer, 5/16"	5
9.	01-188-0518	Hex Nut, 5/16" - 18	5
10.	01-260-1090	Sheave, 3/3V 5.00SDS	1
11.	01-260-0230	Bushing, 1" SDS	1

Ref. No.	Part No.	Description	No. Used
12.	84-004-2851	Key, 1/4" Sq. x 1-3/16"	1
13.	01-264-0060	Belt, 3/3V 300 P.B.	1
14.	01-168-1610	Machinery Bushing, 1" ID x 10 ga.	3
15.	01-168-1618	Machinery Bushing, 1" ID x 18 ga.	2
16.	32-504-0391	Stiffner	1
17.	01-270-1170	Stud Bolt, 5/16" - 18 x 3-1/2"	1
18.	01-506-0360	Decal - Danger	1

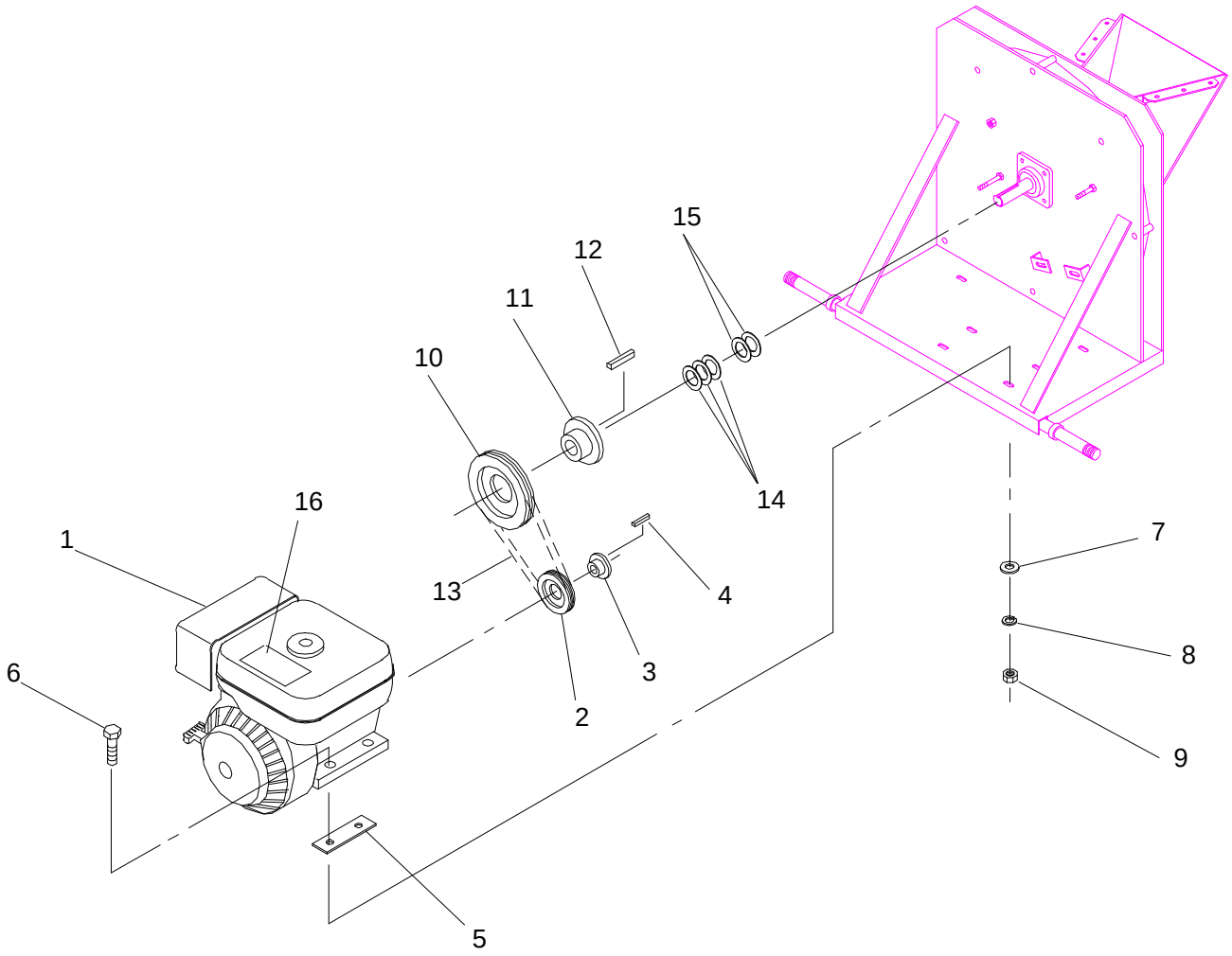

DRIVE ASSEMBLY - MODEL 44555

325-005

Ref. No.	Part No.	Description	No. Used
1.	01-270-2110	Engine, 8hp Honda	1
2.	01-260-0110	Sheave, 3/3V 3.35SH	1
3.	01-260-0280	Bushing, 1" SH	1
4.	82-004-1171	Key, 1/4" Sq. x 1-1/8"	1
5.	32-504-0671	Engine Spacer	2
6.	01-178-0512	Capscrew - Hex Hd., 5/16" - 18 x 1-1/2"	4
7.	01-166-0500	Flat Washer, 5/16"	4
8.	01-166-0510	Lock Washer, 5/16"	4
9.	01-188-0518	Hex Nut, 5/16" - 18	4
10.	01-260-1090	Sheave, 3/3V 5.00SDS	1

Ref. No.	Part No.	Description	No. Used
11.	01-260-0230	Bushing, 1" SDS	1
12.	84-004-2851	Key, 1/4" Sq. x 1-3/16"	1
13.	01-264-0060	Belt, 3/3V 300 P.B.	1
14.	01-168-1610	Machinery Bushing, 1" ID x 10 ga.	3
15.	01-168-1618	Machinery Bushing, 1" ID x 18 ga.	2
16.	01-506-0360	Decal - Danger	1

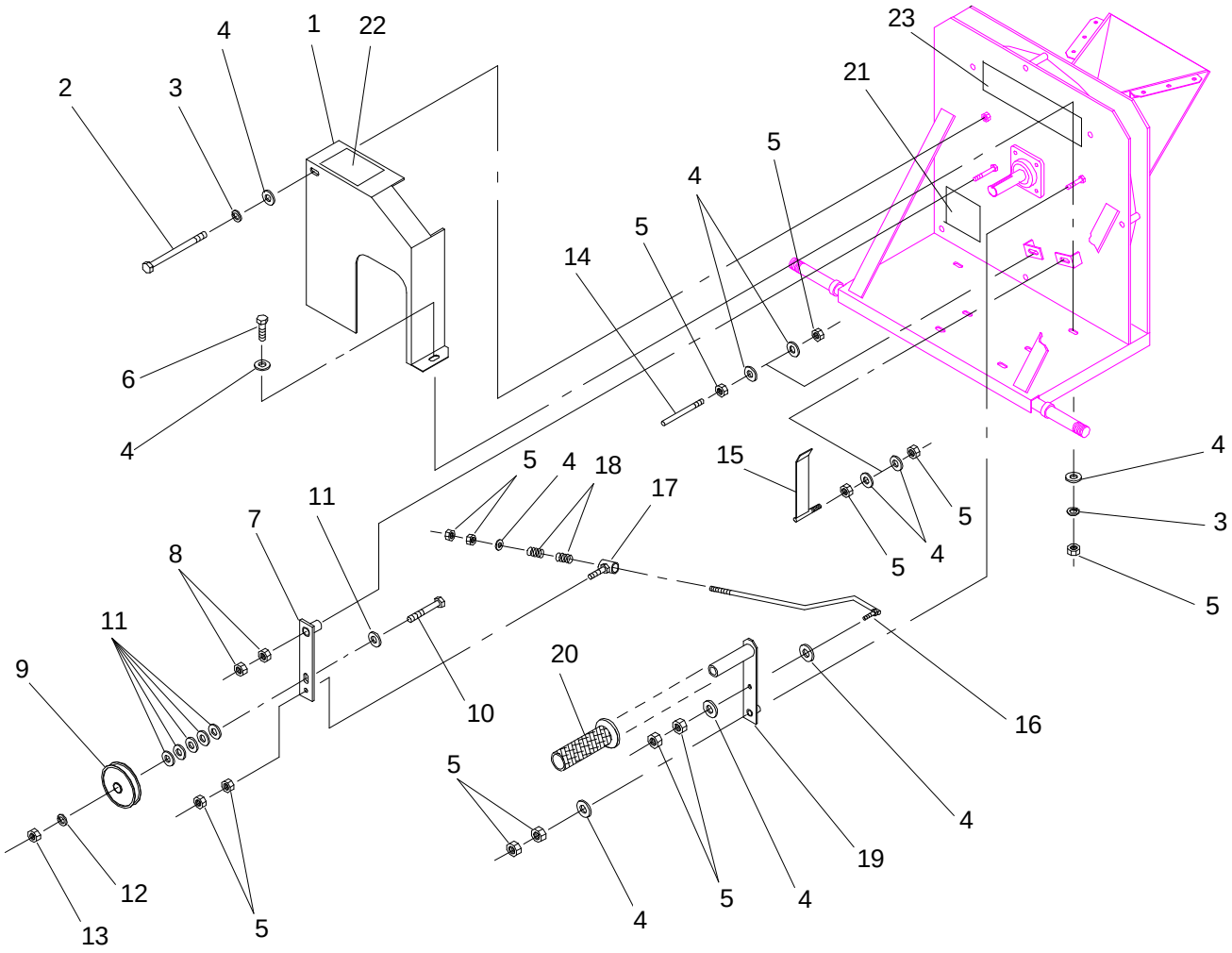

BELT IDLER & GUARD - MODEL 44550

325-004

Ref. No.	Part No.	Description	No. Used
1.	32-505-0081	Belt Guard	1
2.	01-178-0632	Capscrew - Hex Hd., 3/8" - 16 x 4"	1
3.	01-166-0610	Lock Washer, 3/8"	3
4.	01-166-0600	Flat Washer, 3/8"	13
5.	01-188-0616	Hex Nut, 3/8" - 16	14
6.	01-178-0610	Capscrew - Hex Hd., 3/8" - 16 x 1-1/4"	2
7.	32-505-0091	Idler Arm Assembly	1
8.	01-191-0511	Jam Nut, 5/8" - 11	2
9.	01-268-0090	Idler Pulley	1
10.	01-178-0824	Capscrew - Hex Hd., 1/2" - 13 x 3"	1

Ref. No.	Part No.	Description	No. Used
11.	01-166-0800	Flat Washer, 1/2"	6
12.	01-166-0810	Lock Washer, 1/2"	1
13.	01-188-0813	Hex Nut, 1/2" - 13	1
14.	32-504-0371	Belt Slip Pin	1
15.	32-505-0161	Belt Stop Assembly	1
16.	32-505-0071	Idler Rod	1
17.	32-505-0101	Idler Pivot	1
18.	01-261-0330	Spring	2
19.	32-505-0061	Handle	1
20.	01-259-0010	Handle Grip	1
21.	01-506-0350	Decal - Danger	1
22.	01-506-0040	Decal - Danger	1
23.	01-506-0990	Decal - Yard Chipper 1325	1

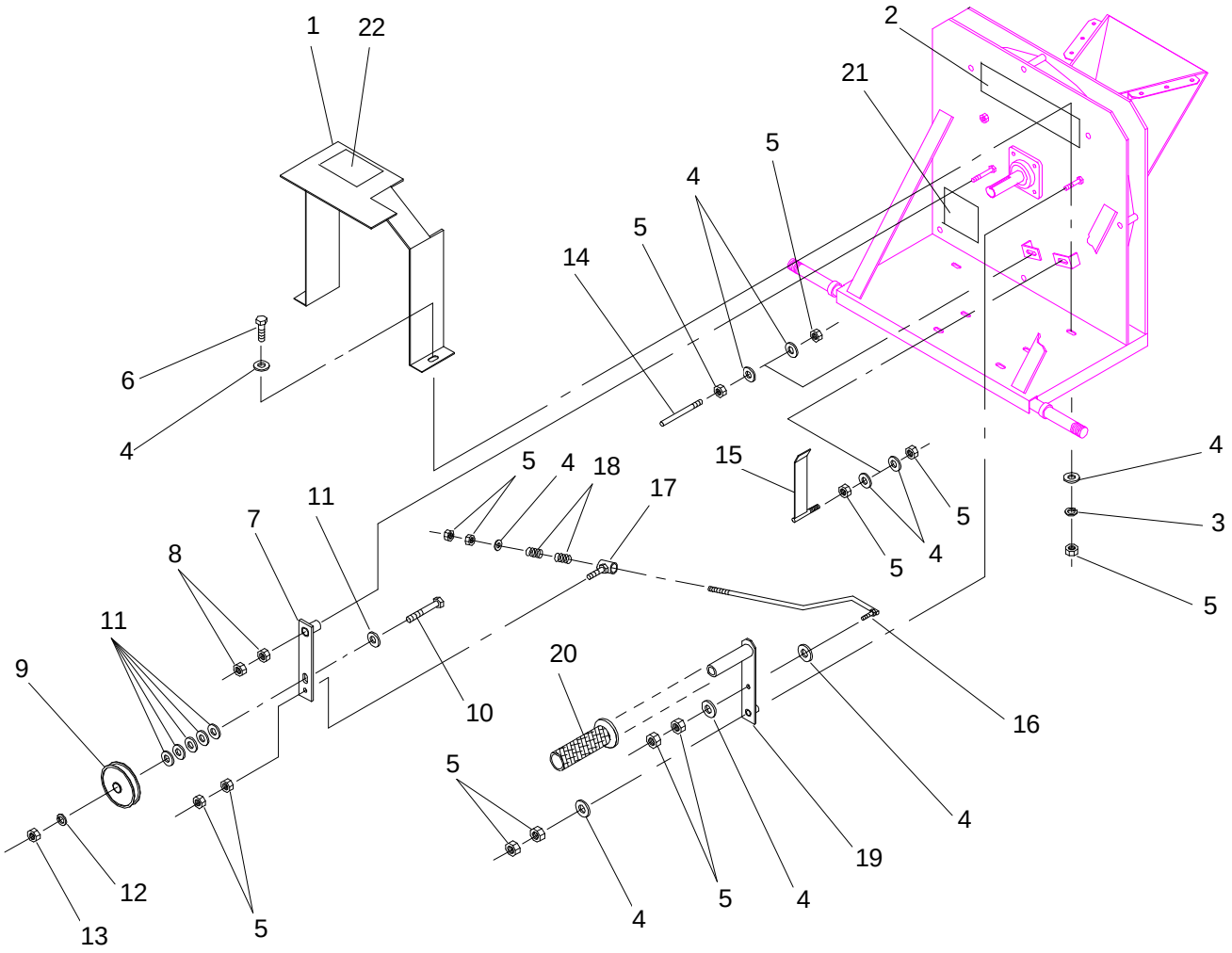

BELT IDLER & GUARD - MODEL 44555

325-006

Ref. No.	Part No.	Description	No. Used
1.	32-505-0201	Belt Guard	1
2.	01-506-0990	Decal - Yard Chipper 1325	1
3.	01-166-0610	Lock Washer, 3/8"	2
4.	01-166-0600	Flat Washer, 3/8"	12
5.	01-188-0616	Hex Nut, 3/8" - 16	14
6.	01-178-0610	Capscrew - Hex Hd., 3/8" - 16 x 1-1/4"	2
7.	32-505-0091	Idler Arm Assembly	1
8.	01-191-0511	Jam Nut, 5/8" - 11	2
9.	01-268-0090	Idler Pulley	1
10.	01-178-0824	Capscrew - Hex Hd., 1/2" - 13 x 3"	1

Ref. No.	Part No.	Description	No. Used
11.	01-166-0800	Flat Washer, 1/2"	6
12.	01-166-0810	Lock Washer, 1/2"	1
13.	01-188-0813	Hex Nut, 1/2" - 13	1
14.	32-504-0371	Belt Slip Pin	1
15.	32-505-0161	Belt Stop Assembly	1
16.	32-505-0071	Idler Rod	1
17.	32-505-0101	Idler Pivot	1
18.	01-261-0330	Spring	2
19.	32-505-0061	Handle	1
20.	01-259-0010	Handle Grip	1
21.	01-506-0350	Decal - Danger	1
22.	01-506-0040	Decal - Danger	1

PART NUMBER INDEX

Part No.	Description	Pg. No.	Ref. No.	Qty.
01-100-0190	Bearing	2	10	2
01-100-0190	Bearing	3	10	2
01-102-0040	Bearing	5	11	4
01-158-0180	Capscrew - Flat Hd. Socket	2	6	8
01-158-0180	Capscrew - Flat Hd. Socket	3	6	8
01-166-0410	Lock Washer	4	8	9
01-166-0500	Flat Washer	4	3	6
01-166-0500	Flat Washer	6	7	4
01-166-0500	Flat Washer	7	7	4
01-166-0510	Lock Washer	4	4	6
01-166-0510	Lock Washer	6	8	5
01-166-0510	Lock Washer	7	8	4
01-166-0600	Flat Washer	2	16	1
01-166-0600	Flat Washer	3	16	1
01-166-0600	Flat Washer	4	15	4
01-166-0600	Flat Washer	8	4	13
01-166-0600	Flat Washer	9	4	12
01-166-0610	Lock Washer	2	15	1
01-166-0610	Lock Washer	3	15	1
01-166-0610	Lock Washer	8	3	3
01-166-0610	Lock Washer	9	3	2
01-166-0700	Flat Washer	5	7	1
01-166-0800	Flat Washer	8	11	6
01-166-0800	Flat Washer	9	11	6
01-166-0810	Lock Washer	2	12	8
01-166-0810	Lock Washer	3	12	8
01-166-0810	Lock Washer	8	12	1
01-166-0810	Lock Washer	9	12	1
01-166-400	Flat Washer	4	9	9
01-168-1610	Machinery Bushing	6	14	3
01-168-1610	Machinery Bushing	7	14	3
01-168-1618	Machinery Bushing	6	15	2
01-168-1618	Machinery Bushing	7	15	2
01-178-0403	Capscrew - Hex Hd.	4	7	6
01-178-0408	Capscrew - Hex Hd.	4	12	3
01-178-0508	Capscrew - Hex Hd.	4	2	6
01-178-0512	Capscrew - Hex Hd.	6	6	4
01-178-0512	Capscrew - Hex Hd.	7	6	4
01-178-0608	Capscrew - Hex Hd.	2	14	1
01-178-0608	Capscrew - Hex Hd.	3	14	1
01-178-0610	Capscrew - Hex Hd.	8	6	2
01-178-0610	Capscrew - Hex Hd.	9	6	2
01-178-0622	Capscrew - Hex Hd.	2	8	8
01-178-0622	Capscrew - Hex Hd.	3	8	9
01-178-0624	Capscrew - Hex Hd.	2	9	1
01-178-0632	Capscrew - Hex Hd.	8	2	1
01-178-0728	Capscrew - Hex Hd.	5	2	4
01-178-0810	Capscrew - Hex Hd.	2	11	8
01-178-0810	Capscrew - Hex Hd.	3	11	8
01-178-0824	Capscrew - Hex Hd.	8	10	1
01-178-0824	Capscrew - Hex Hd.	9	10	1
01-188-0420	Hex Nut	4	10	3
01-188-0518	Hex Nut	4	5	6
01-188-0518	Hex Nut	6	9	5
01-188-0518	Hex Nut	7	9	4
01-188-0616	Hex Nut	4	14	4
01-188-0616	Hex Nut	8	5	14
01-188-0616	Hex Nut	9	5	14
01-188-0714	Hex Nut	5	3	6
01-188-0813	Hex Nut	2	13	8
01-188-0813	Hex Nut	3	13	8
01-188-0813	Hex Nut	8	13	1
01-188-0813	Hex Nut	9	13	1
01-190-1614	Castle Nut	5	13	2
01-191-0511	Jam Nut	8	8	2
01-191-0511	Jam Nut	9	8	2
01-191-0616	Jam Nut	4	16	2
01-191-0714	Jam Nut	5	8	2
01-192-0190	Whiz Nut	2	17	9
01-192-0190	Whiz Nut	3	17	9
01-259-0010	Handle Grip	8	20	1
01-259-0010	Handle Grip	9	20	1
01-260-0110	Sheave	6	2	1
01-260-0110	Sheave	7	2	1
01-260-0230	Bushing	6	11	1
01-260-0230	Bushing	7	11	1
01-260-0280	Bushing	6	3	1
01-260-0280	Bushing	7	3	1
01-260-1090	Sheave	6	10	1
01-260-1090	Sheave	7	10	1
01-261-0330	Spring	8	18	2
01-261-0330	Spring	9	18	2
01-264-0060	Belt	6	13	1
01-264-0060	Belt	7	13	1
01-268-0090	Idler Pulley	8	9	1
01-268-0090	Idler Pulley	9	9	1
01-269-0230	Tire & Wheel	5	10	2
01-270-1170	Stud Bolt	6	17	1
01-270-1190	Engine	6	1	1
01-270-2110	Engine	7	1	1
01-276-0010	Ball Hitch	5	4	1
01-286-0040	Grease Cap	5	14	2
01-405-0330	Seal	5	12	2
01-506-0040	Decal - Danger	8	22	1
01-506-0040	Decal - Danger	9	22	1
01-506-0280	Decal - Danger	4	21	1
01-506-0350	Decal - Danger	4	19	1
01-506-0350	Decal - Danger	8	21	1
01-506-0350	Decal - Danger	9	21	1
01-506-0360	Decal - Danger	6	18	1
01-506-0360	Decal - Danger	7	16	1
01-506-0400	Decal - Danger	4	17	2
01-506-0410	Decal - Danger	4	20	1
01-506-0470	Decal - Toro	4	18	2
01-506-0630	Decal - Danger	5	5	1
01-506-0990	Decal - Yard Chipper 1325	8	23	1
01-506-0990	Decal - Yard Chipper 1325	9	2	1
32-502-0991	Chain Assembly	5	9	1
32-504-0371	Belt Slip Pin	8	14	1
32-504-0371	Belt Slip Pin	9	14	1
32-504-0391	Stiffner	2	18	1
32-504-0391	Stiffner	6	16	1
32-504-0402	Blade	2	5	2
32-504-0402	Blade	3	5	2
32-504-0411	Coupler Bracket	5	6	1
32-504-0422	Draw Bar	5	1	1
32-504-0431	Cutter Bar	4	11	1
32-504-0671	Engine Spacer	6	5	2
32-504-0671	Engine Spacer	7	5	2
32-504-0871	Cover Plate	4	6	1
32-505-0061	Handle	8	19	1
32-505-0061	Handle	9	19	1
32-505-0071	Idler Rod	8	16	1
32-505-0071	Idler Rod	9	16	1

PART NUMBER INDEX (Continued)

Part No.	Description	Pg. No.	Ref. No.	Qty.
32-505-0081	Belt Guard	8	1	1
32-505-0091	Idler Arm Assembly	8	7	1
32-505-0091	Idler Arm Assembly	9	7	1
32-505-0101	Idler Pivot	8	17	1
32-505-0101	Idler Pivot	9	17	1
32-505-0113	Cutter Wheel	2	4	1
32-505-0113	Cutter Wheel	3	4	1
32-505-0124	Body Assembly	2	1	1
32-505-0124	Body Assembly	3	1	1
32-505-0131	Discharge Guard Assembly	2	2	1
32-505-0131	Discharge Guard Assembly	3	2	1
32-505-0141	Ring Assembly	2	3	1
32-505-0141	Ring Assembly	3	3	1
32-505-0154	Front Side Assembly	2	7	1
32-505-0154	Front Side Assembly	3	7	1
32-505-0161	Belt Stop Assembly	8	15	1
32-505-0161	Belt Stop Assembly	9	15	1
32-505-0181	Chute Extension	4	1	1
32-505-0191	Cutter Bar Adjustment Spade	4	13	2
32-505-0201	Belt Guard	9	1	1
32-505-1001	Bearing Cover	2	19	1
32-505-1001	Bearing Cover	3	9	1
82-004-1171	Key - Sq.	6	4	1
82-004-1171	Key - Sq.	7	4	1
84-004-2851	Key - Sq.	6	12	1
84-004-2851	Key - Sq.	7	12	1

PRODUCT CHANGES

In an effort to make improvements available to TORO owners as quickly as possible minor changes are incorporated into Toro's products from time to time that do not become immediately shown in the Parts Catalog. If such a change has been made in your unit which is not reflected in your manual see your TORO Distributor or an Authorized Service Dealer for information and part numbers.

IDENTIFICATION & ORDERING

MODEL AND NUMBERS

The YARD CHIPPER 1325 has two identification numbers; a model number and a serial number. The two numbers are stamped on a plate which is located on the main body. In any correspondence concerning the Yard Chipper 1325, supply model and serial numbers to assure that correct information and replacement parts are obtained.

To order replacement parts from your TORO Distributor or an Authorized Service Dealer, supply the following information:

1. Model and serial number of the unit.
2. Part number description and the quantity of part (s) desired.

TABLE OF CONTENTS

Description	Page	Description