FORM NO. 01-505-0110.5

TORO

MODEL NO. 44830 - 20101 & UP
MODEL NO. 44831 - 20101 & UP
MODEL NO. 44835 - 20101 & UP

PARTS CATALOG

AEROTHATCH 83/SEEDER 93

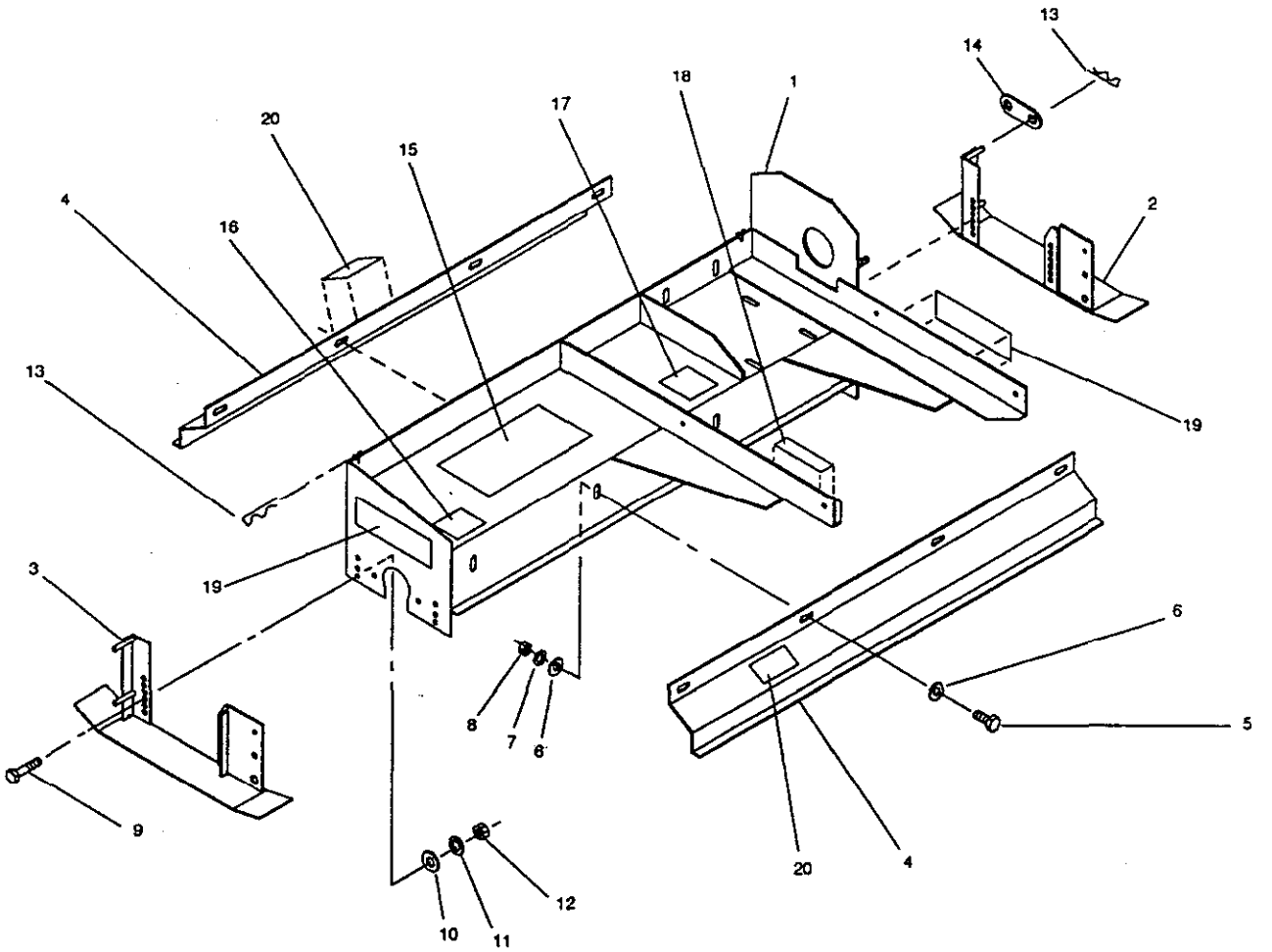

AEROTHATCH 83
MAIN FRAME ASSEMBLY

83-001

Ref. No.	Part No.	Description	No. Used
1	83-005-0013	Main Frame	1
2	83-005-1002	Skid Assembly-L.H.	1
3	83-005-0033	Skid Assembly-R.H.	1
4	83-004-0112	Roller Shield	2
5	323-6	Capscrew - Hex Hd.	8
6	3256-4	Flat Washer	16
7	3253-5	Lock Washer	8
8	3217-7	Hex Nut	8
9	325-5	Capscrew - Hex Hd.	4
10	3256-6	Flat Washer	8
11	3253-7	Lock Washer	8
12	3217-9	Hex Nut	8
13	01-159-0010	Presto Pin	6
14	93-004-0121	Seed Box Mount	4
15	01-506-0520	Decal - Toro	1
16	01-506-0430	Decal - Replacement Manual	1
17	01-506-0160	Decal - Important	1
18	01-506-0130	Decal - Danger	1
19	01-506-1010	Decal - Aerothatch 83	2
20	01-506-0340	Decal - Danger	2

© The TORO Company - 1993
All Rights Reserved

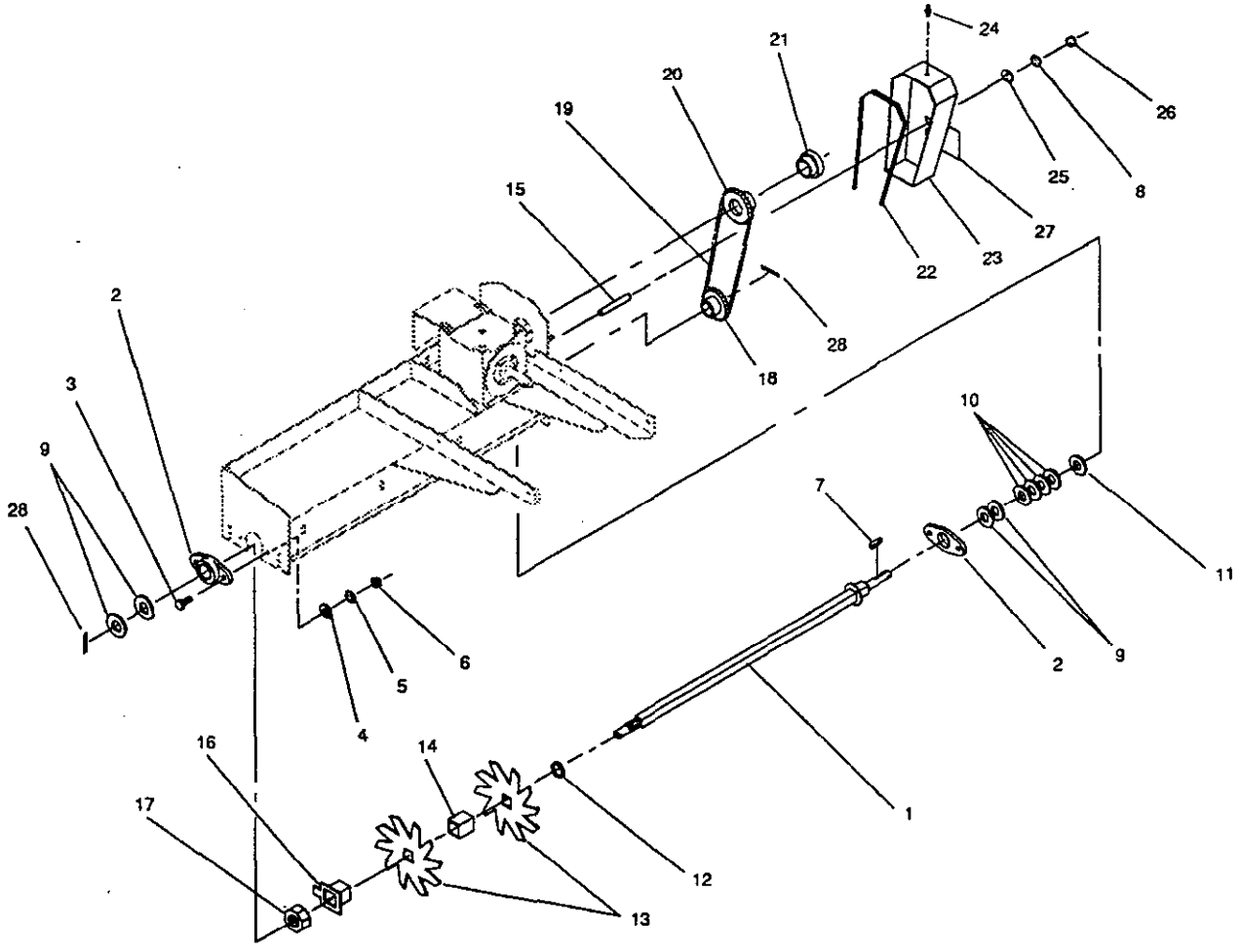

AEROTHATCH 83 - MODEL 44830 (3" Centers) BLADE SHAFT & CHAIN DRIVE ASSEMBLY

83-002

Ref. No.	Part No.	Description	No. Used
1	83-005-0051	Blade Shaft	1
2	01-100-0170	Bearing	2
3	325-6	Capscrew - Hex Hd.	4
4	3256-6	Flat Washer	4
5	3253-7	Lock Washer	4
6	3217-9	Hex Nut	4
7	83-004-0431	Key	1
8	3253-5	Lock Washer	2
9	01-168-2018	Machinery Bushing	4(var)
10	01-168-2010	Machinery Bushing	4
11	01-168-2014	Machinery Bushing	1
12	83-004-0531	End Spacer	1
13	01-283-0090	Blade	16
14	83-004-0311	Blade Spacer	15
15	83-004-0871	Guard Spacer	2
16	83-005-1011	Locking Spacer	1

Ref. No.	Part No.	Description	No. Used
17	01-191-2805	Jam Nut	1
18	01-262-0190	Sprocket	1
19	83-004-0511	Drive Chain	1
*	01-251-0170	Offset Link	1
20	01-262-0060	Sprocket	1
21	01-260-0140	Bushing	1
22	83-004-0601	Guard Seal	1
23	83-005-0062	Chain Guard	1
24	01-215-0050	Grease Zerk	1
25	3256-4	Flat Washer	2
26	3217-7	Hex Nut	2
27	01-506-0050	Decal - Danger	1
*	83-002-0022	Blade Shaft Assembly (Incl. Ref. #1,12 - 14,16,17)	1
28	3272-23	Cotter Pin	2

* Not Illustrated

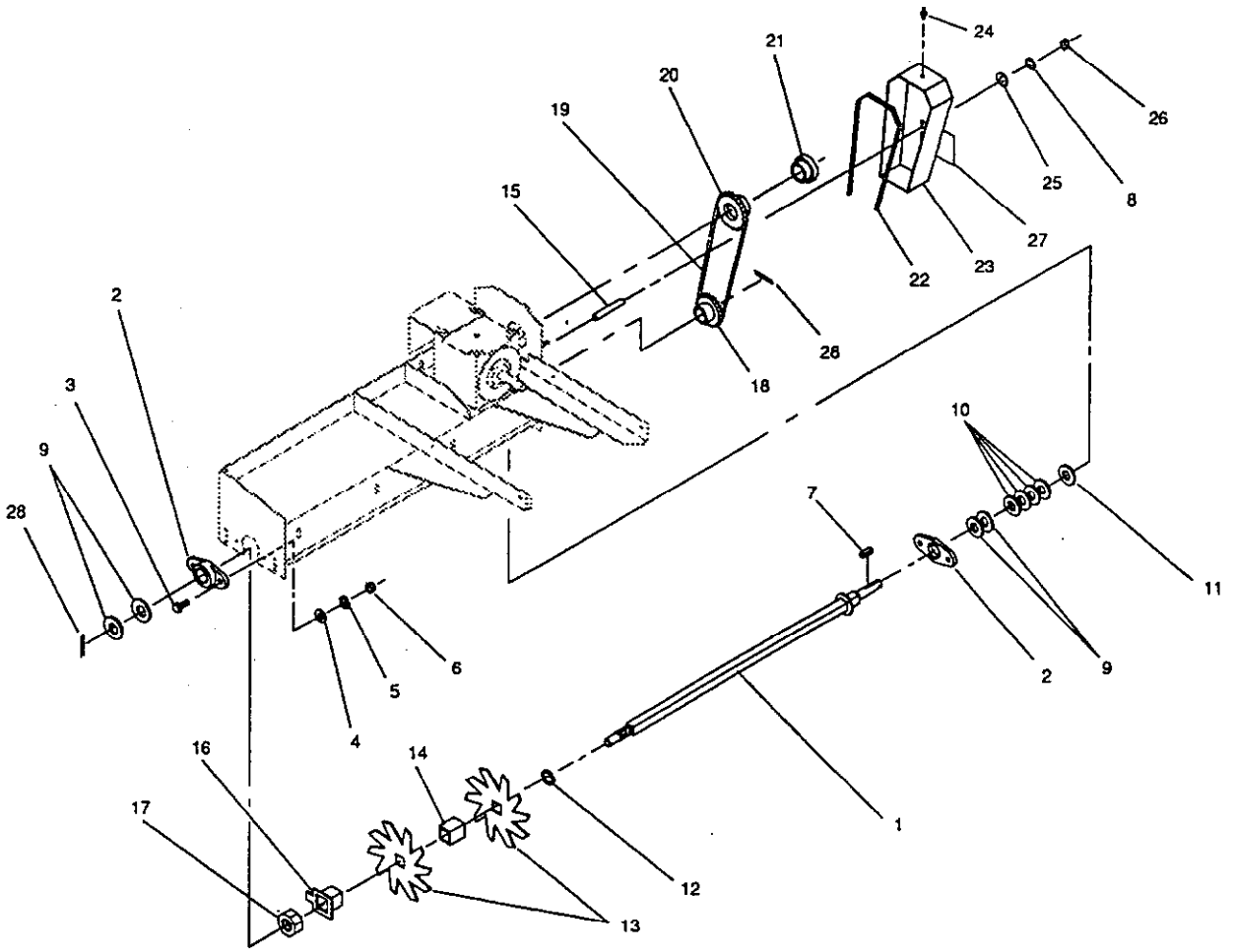

AEROTHATCH 83 - MODEL 44831 (1" Centers) BLADE SHAFT & CHAIN DRIVE ASSEMBLY

83-002

Ref. No.	Part No.	Description	No. Used
1	83-005-0051	Blade Shaft	1
2	01-100-0170	Bearing	2
3	325-6	Capscrew - Hex Hd.	4
4	3256-6	Flat Washer	4
5	3253-7	Lock Washer	4
6	3217-9	Hex Nut	4
7	83-004-0431	Key	1
8	3253-5	Lock Washer	2
9	01-168-2018	Machinery Bushing	4(var)
10	01-168-2010	Machinery Bushing	4
11	01-168-2014	Machinery Bushing	1
12	83-004-0531	End Spacer	1
13	01-283-0090	Blade	43
14	83-004-0631	Blade Spacer	42
15	83-004-0871	Guard Spacer	2
16	83-005-1011	Locking Spacer	1

Ref. No.	Part No.	Description	No. Used
17	01-191-2805	Jam Nut	1
18	01-262-0190	Sprocket	1
19	83-004-0511	Drive Chain	1
*	01-251-0170	Offset Link	1
20	01-262-0060	Sprocket	1
21	01-260-0140	Bushing	1
22	83-004-0601	Guard Seal	1
23	83-005-0062	Chain Guard	1
24	01-215-0050	Grease Zerk	1
25	3256-4	Flat Washer	2
26	3217-7	Hex Nut	2
27	01-506-0050	Decal - Danger	1
*	83-002-0022	Blade Shaft Assembly (Incl. Ref. #1,12 - 14,16,17)	1
28	3272-23	Cotter Pin	2

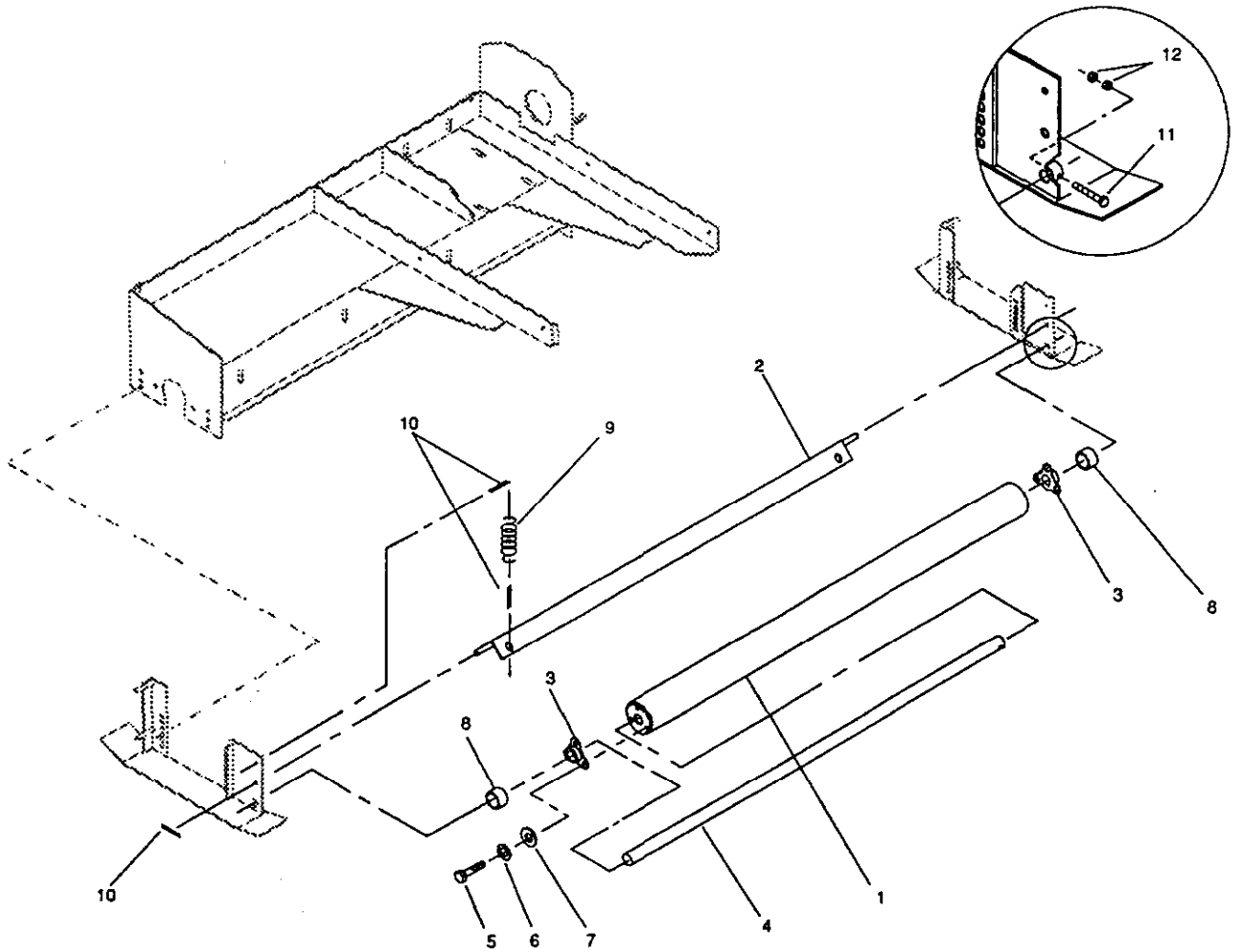

AEROTHATCH 83
ROLLER & SCRAPER ASSEMBLY

83-003

Ref. No.	Part No.	Description	No. Used
1	83-005-0042	Roller Assembly	1
2	83-005-0072	Wiper Assembly	1
3	01-100-0260	Bearing	2
4	83-004-0841	Roller Shaft	1
5	322-6	Capscrew - Hex Hd.	6
6	3253-4	Lock Washer	6

Ref. No.	Part No.	Description	No. Used
7	3256-2	Flat Washer	6
8	83-004-0371	Roller Spacer	2
9	01-261-0130	Spring	2
10	01-151-0030	Cotter Pin	6
11	321-11	Capscrew - Hex Hd.	1
12	3217-5	Hex Nut	2

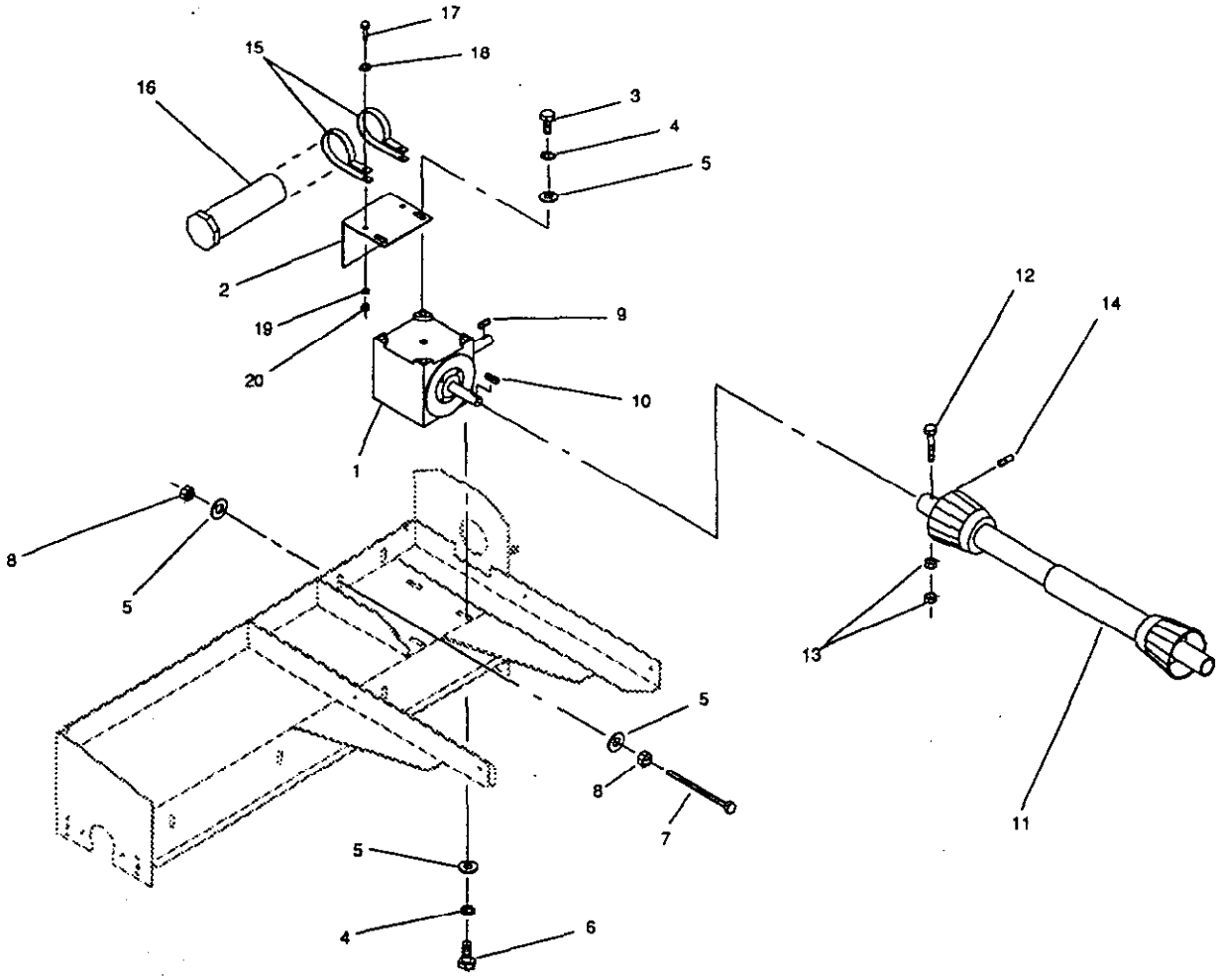

AEROTHATCH 83
GEARBOX MOUNTING ASSEMBLY

83-004

Ref. No.	Part No.	Description	No. Used
1	01-267-0020	Gearbox	1
2	83-004-0361	Gearbox Shield	1
3	325-4	Capscrew - Hex Hd.	2
4	3253-7	Lock Washer	6
5	3256-6	Flat Washer	10
6	325-6	Capscrew - Hex Hd.	4
7	01-182-0844	Capscrew - Hex Hd.	2
8	3217-9	Hex Nut	4
9	83-004-0441	Key	1
10	12-004-1331	Key	1

Ref. No.	Part No.	Description	No. Used
11	01-282-0210	PTO Assembly	1
12	322-20	Capscrew - Hex Hd.	1
13	3217-6	Hex Nut	2
14	01-163-0030	Set Screw	1
15	2412-133	R-Clamp	2
16	74-0720	Manual Tube	1
17	321-4	Capscrew - Hex Hd.	2
18	3256-2	Flat Washer	2
19	3253-3	Lock Washer	2
20	3217-5	Hex Nut	2

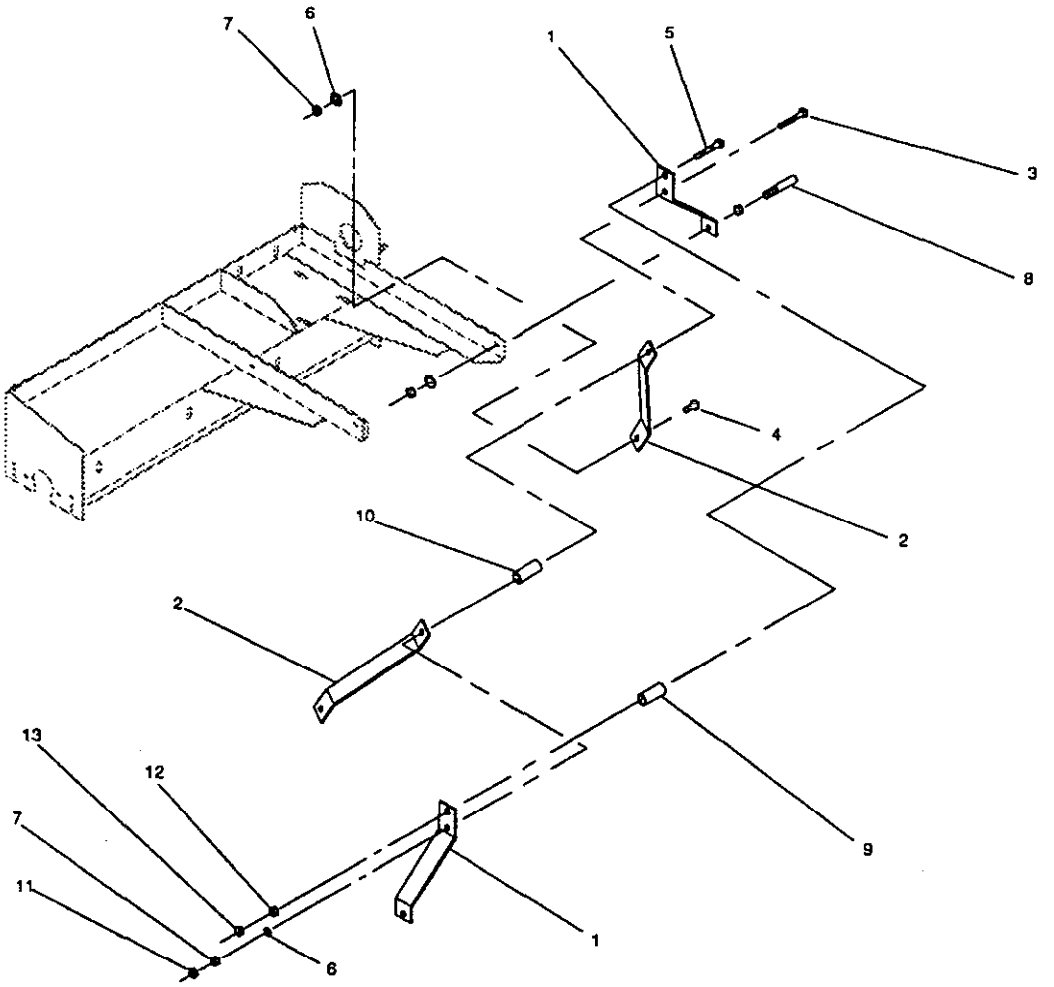

AEROTHATCH 83
3 POINT HITCH ASSEMBLY

83-005

Ref. No.	Part No.	Description	No. Used
1	83-004-0291	Arm Hitch Mount	2
2	83-004-0302	Stabilizer Arm	2
3	325-22	Capscrew - Hex Hd.	1
4	325-6	Capscrew - Hex Hd.	2
5	328-12	Capscrew - Hex Hd.	1
6	3253-7	Lock Washer	3
7	3217-9	Hex Nut	3

Ref. No.	Part No.	Description	No. Used
8	01-252-0010	Hitch Pin w/nuts & lock washer	2
9	83-004-0381	Top Spacer	1
10	83-004-0391	Bottom Spacer	1
11	3218-5	Jam Nut	1
12	3217-12	Hex Nut	1
13	3218-7	Jam Nut	1

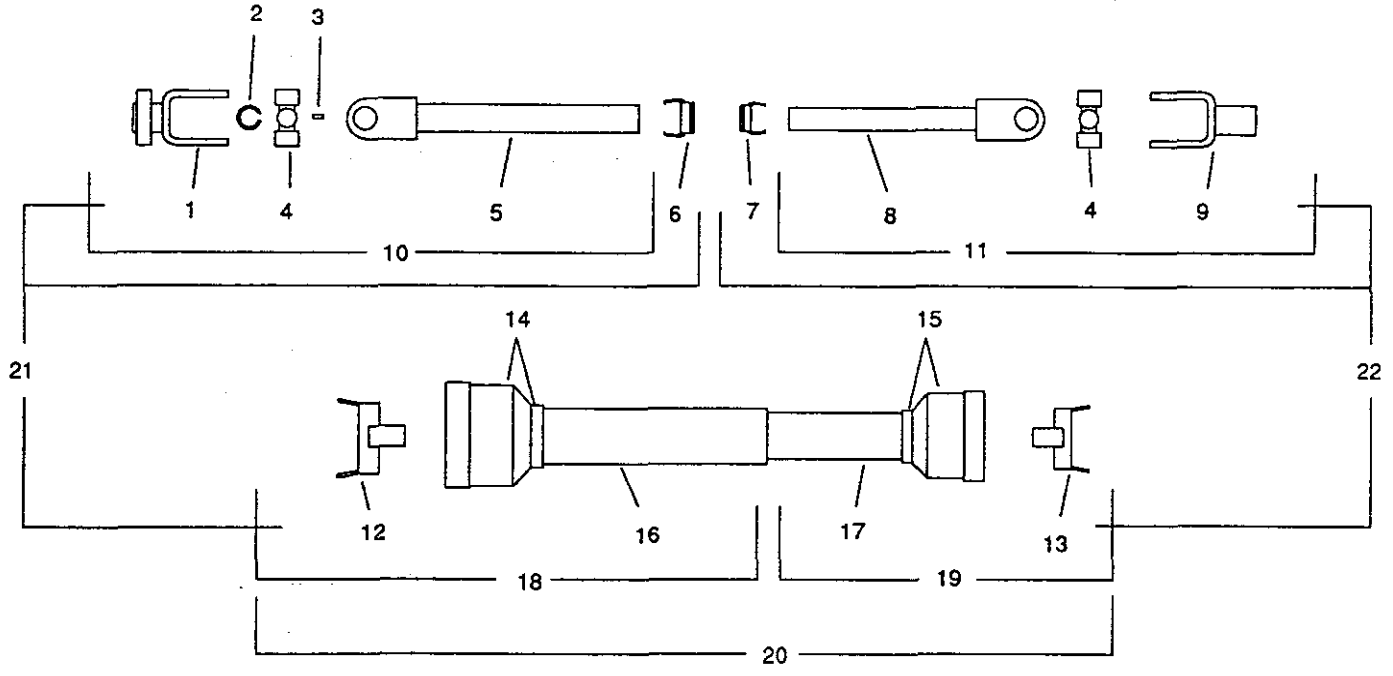

AEROTHATCH 83
PTO ASSEMBLY NO. 01-282-0210

PTO-0210

Ref. No.	Part No.	Description	No. Used
1	01-282-0830	Twist Yoke	1
2	01-282-0310	Snap Ring	8
3	01-282-0320	Grease Fitting	2
4	01-282-0300	Cross & Bearing	2
5	01-282-0330	Outer Yoke-tractor End	1
6	01-282-0260	Shield Bearing-outer	1
7	01-282-0270	Shield Bearing-inner	1
8	01-282-0340	Inner Yoke	1
9	01-282-0850	Implement Yoke	1
10	01-282-0350	Unshielded Outer Half	1
11	01-282-0360	Unshielded Inner Half	1

Ref. No.	Part No.	Description	No. Used
12	01-282-0370	Shield Bearing-tractor End	1
13	01-282-0380	Shield Bearing	1
14	01-282-0390	Outer Tube Cone-tractor End	1
15	01-282-0400	Inner Tube Cone	1
16	01-282-0410	Outer Tube Shielding	1
17	01-282-0420	Inner Tube Shielding	1
18	01-282-0430	Outer Shield Half	1
19	01-282-0440	Inner Shield Half	1
20	01-282-0450	Complete Shield	1
21	01-282-0460	Shielded Outer Half	1
22	01-282-0470	Shielded Inner Half	1

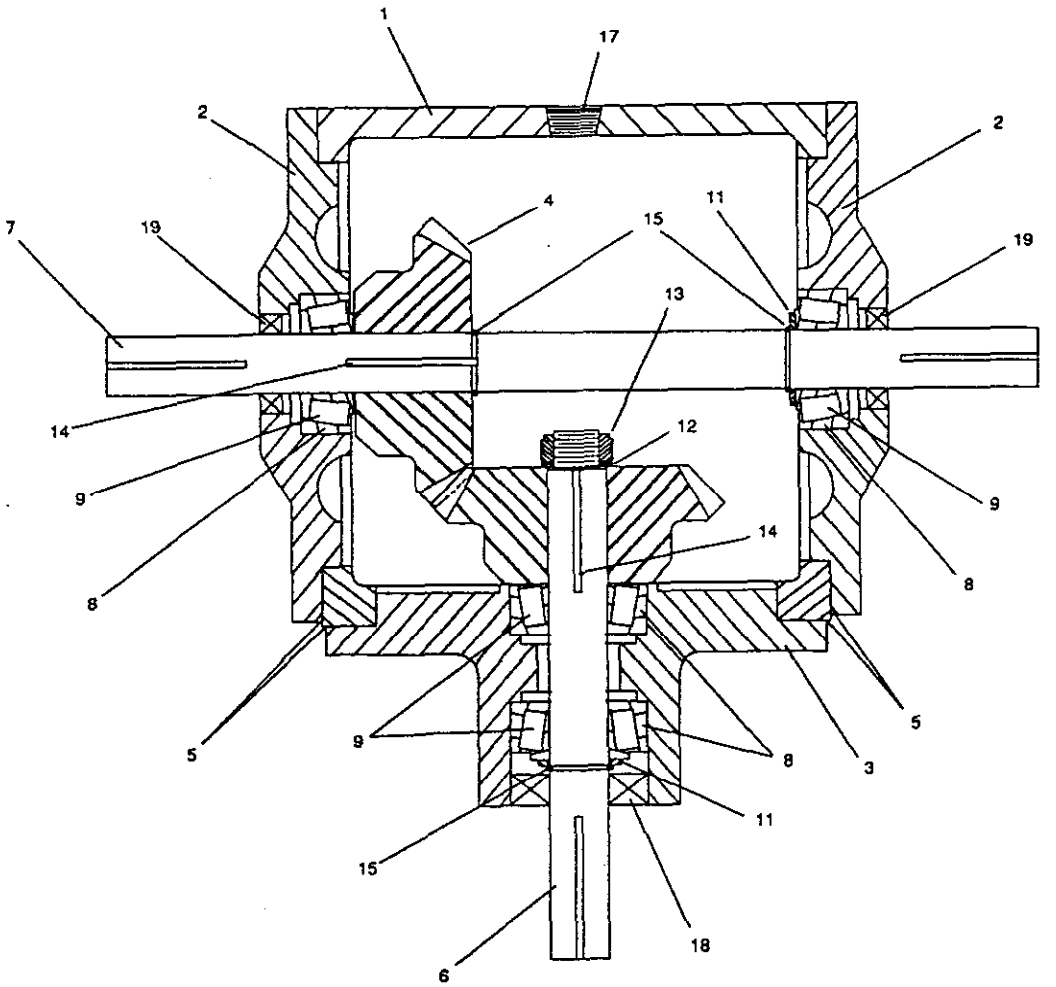

AEROTHATCH 83
GEARBOX ASSEMBLY - NO. 01-267-0020

83-006

Ref. No.	Part No.	Description	No. Used
1	01-267-0210	Housing	1
2	01-267-0270	Cap - Open	2
3	01-267-0280	Housing - Pinion	1
4	01-267-0180	Gear - Bevel	2
5	01-267-0290	Shim Set (See Note)	Var
6	01-267-0110	Pinion Shaft	1
7	01-267-0120	Cross Shaft	1
8	01-103-0150	Bearing - Cup	4
9	01-102-0140	Bearing - Cone	4
10	323-6	Capscrew - Hex Hd.	18
		NOTE: Set includes (1) shim .002" thick (2) shims .005" thick	

Ref. No.	Part No.	Description	No. Used
11	01-267-0300	Spacer	2
12	01-267-0310	Washer	1
13	01-192-0210	Nut - Self Locking	1
14	01-267-0320	Key	2
15	01-267-0330	Retaining Ring	3
16	01-267-0130	Seal Kit (Incl. Ref. #5, 13-15, 17-19)	1
17	01-451-0010	Pipe Plug	2
18	01-405-0480	Seal	1
19	01-405-0470	Seal	2

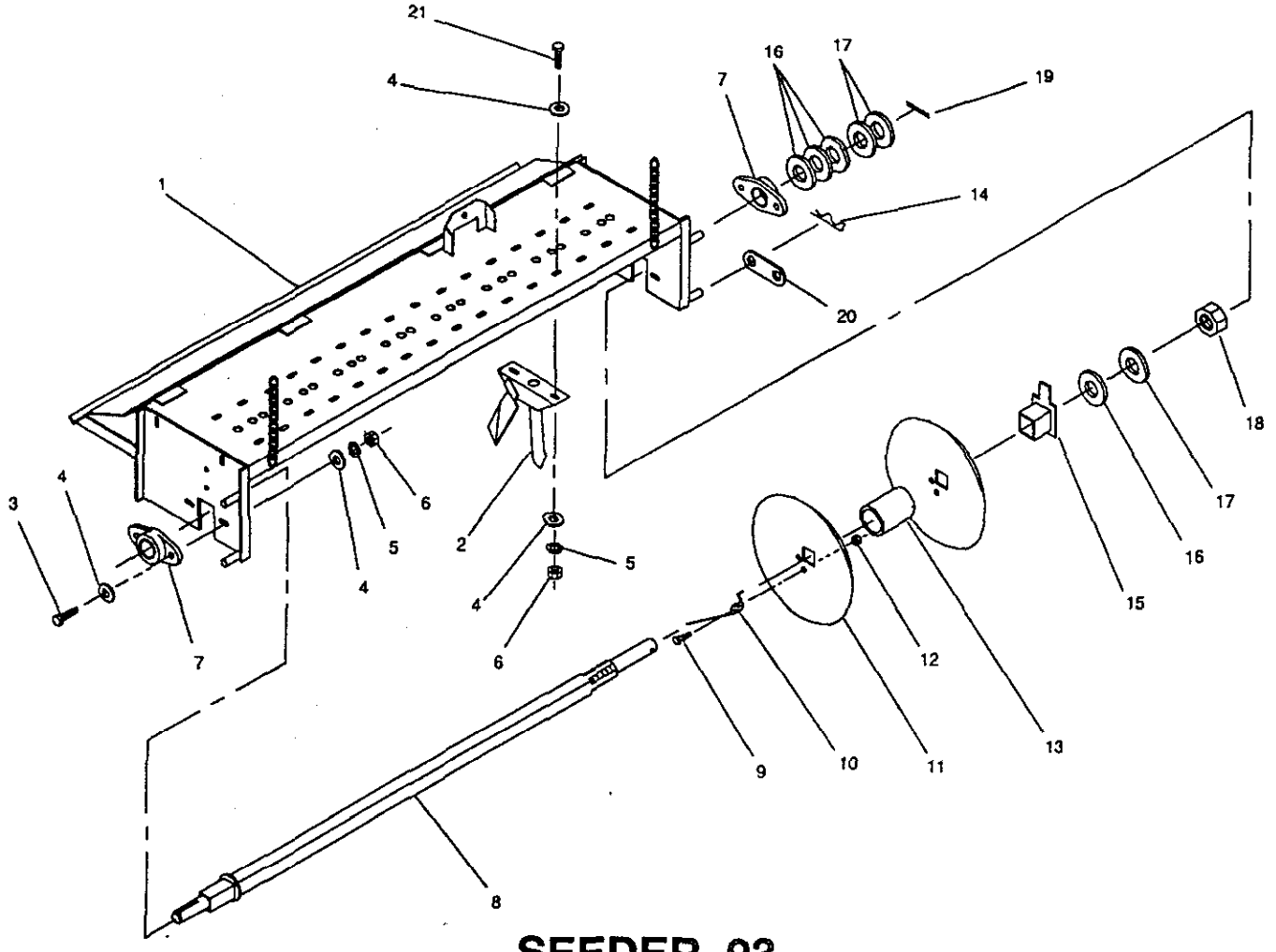

SEEDER 93
DISC FRAME ASSEMBLY

93-001

Ref. No.	Part No.	Description	No. Used
1	93-005-0093	Disc Frame Assembly	1
2	93-005-0073	Seeder Tube Assembly	16
3	323-7	Capscrew - Hex Hd.	4
4	3256-4	Flat Washer	72
5	3253-5	Lock Washer	36
6	3217-7	Hex Nut	36
7	01-100-0160	Bearing	2
8	93-005-0522	Disc Shaft	1
9	323-4	Capscrew - Hex Hd.	16
10	01-261-0140	Wiper Spring	16
11	01-283-0020	Disc	16
12	3296-22	Lock Nut	16

Ref. No.	Part No.	Description	No. Used
13	93-004-0511	Disc Spacer	15
14	01-159-0010	Presto Pin	4
15	93-005-0351	Locking Spacer	1
16	01-168-1614	Machinery Bushing	4(var)
17	01-168-1610	Machinery Bushing	3(var)
18	01-191-2206	Jam Nut	1
19	3272-23	Cotter Pin	1
20	93-004-0121	Seeder Box Mount	4
21	323-6	Capscrew - Hex Hd.	32
*	93-002-0642	Disc Shaft Assembly (Incl. Ref. #8 - 18)	1

* Not Illustrated

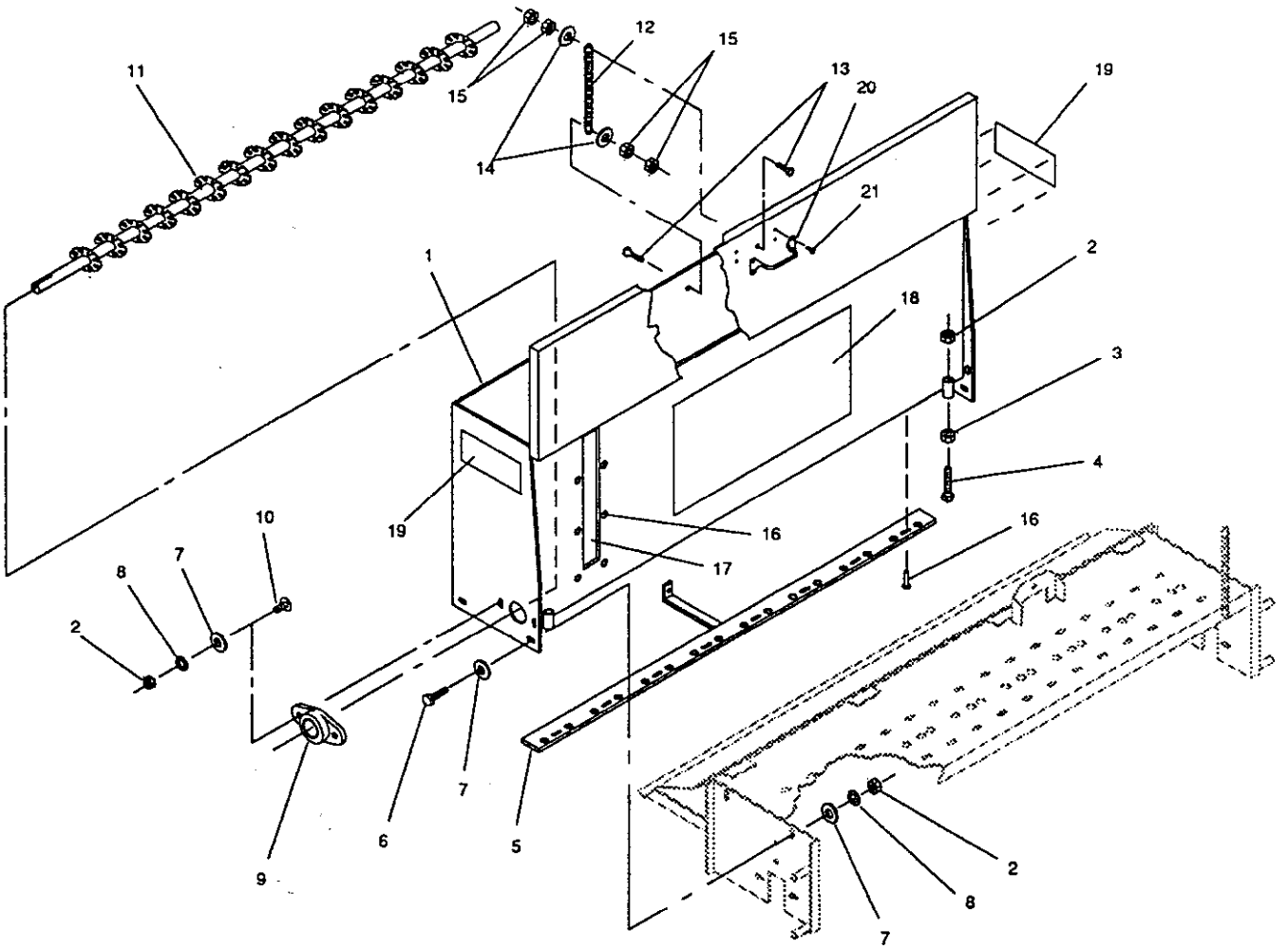

SEEDER 93
SEED BOX ASSEMBLY

93-002

Ref. No.	Part No.	Description	No. Used
1	93-005-0083	Seeder Box Assembly	1
2	3217-7	Hex Nut	12
3	3218-3	Jam Nut	4
4	01-182-0620	Capscrew - Hex Hd.	4
5	93-005-0062	Slide Assembly	1
6	323-6	Capscrew - Hex Hd.	4
7	3256-4	Flat Washer	12
8	3253-5	Lock Washer	8
9	01-100-0160	Bearing	2
10	3231-25	Carriage Bolt	4
11	93-005-0341	Auger Shaft	1

Ref. No.	Part No.	Description	No. Used
12	93-004-0441	Lid Chain	1
13	321-6	Capscrew - Hex Hd.	2
14	3256-2	Flat Washer	2
15	3217-5	Hex Nut	4
16	01-161-0030	Pop Rivet	16
17	93-004-0831	Peep Hole Cover	1
18	01-506-0530	Decal - Toro	1
19	01-506-1030	Decal - Seeder 93	2
20	01-256-0140	Handle	1
21	01-161-0060	Pop Rivet	4

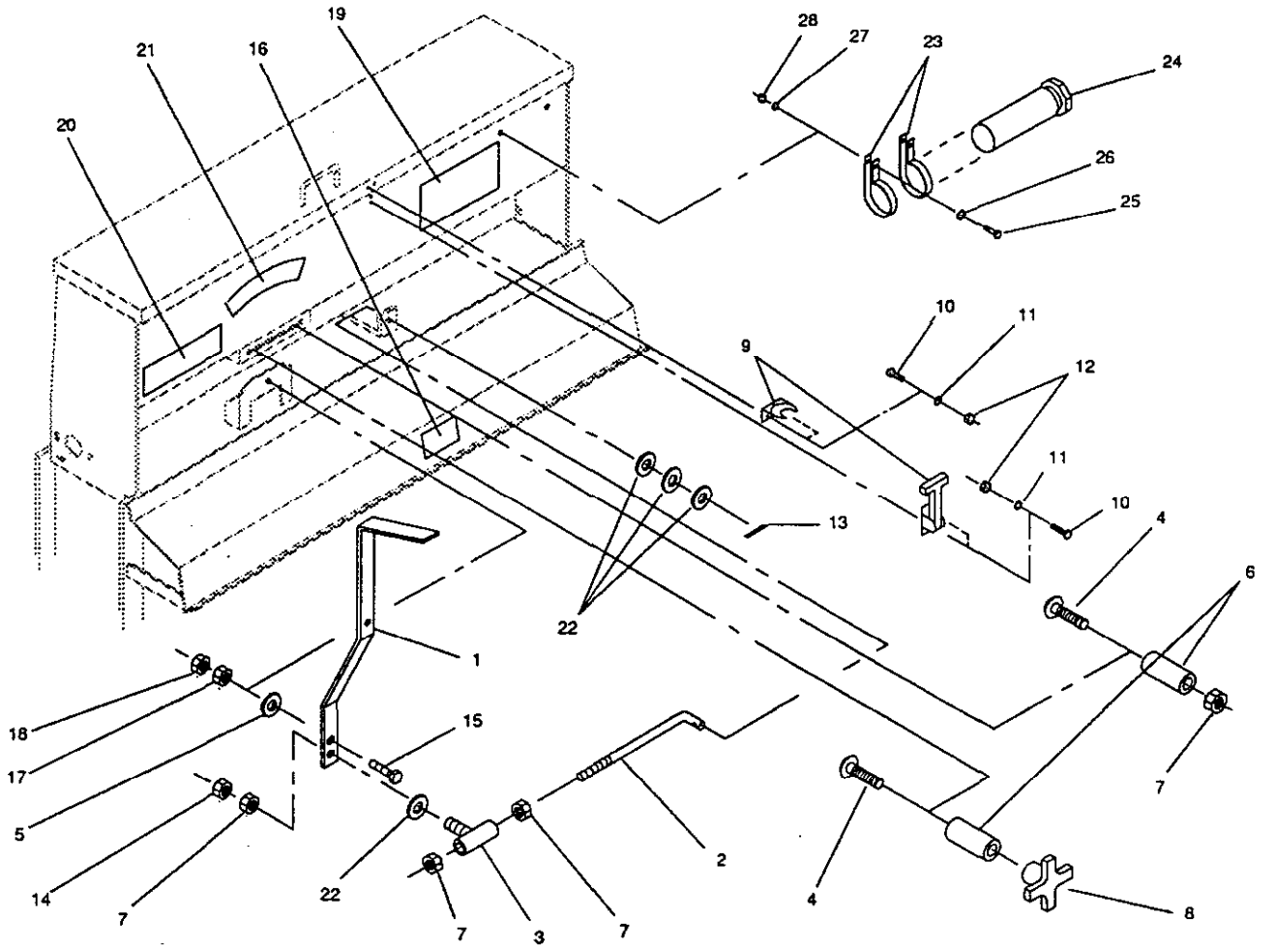

SEEDER 93
SEED BOX ASSEMBLY (Continued)

93-004

Ref. No.	Part No.	Description	No. Used
1	93-005-0811	Seeder Handle	1
2	93-004-0711	Seeder Adjustment Rod	1
3	93-005-0751	Pivot Spacer	1
4	3231-4	Carriage Bolt	2
5	3256-26	"SAE" Flat Washer	1
6	93-004-0761	Adjustment Spacer	2
7	3217-7	Hex Nut	4
8	01-257-0010	Knob	1
9	01-270-1350	Door Latch	1
10	01-158-1210	Capscrew - Slotted Hex Hd.	4
11	3253-2	Lock Washer	4
12	3217-26	Hex Nut	4
13	01-151-0030	Cotter Pin	1
14	3218-3	Jam Nut	1

Ref. No.	Part No.	Description	No. Used
15	325-6	Capscrew - Hex Hd.	1
16	01-506-0340	Decal - Danger	1
17	3217-9	Hex Nut	1
18	3218-5	Jam Nut	1
19	01-506-0520	Decal - Toro	1
20	01-506-0610	Decal - Flow Setting	1
21	01-506-0140	Decal - Seeder Gauge	1
22	3256-4	Flat Washer	4
23	2412-133	R-Clamp	2
24	74-0720	Manual Tube	1
25	321-4	Capscrew - Hex Hd.	2
26	3256-2	Flat Washer	2
27	3253-3	Lock Washer	2
28	3217-5	Hex Nut	2

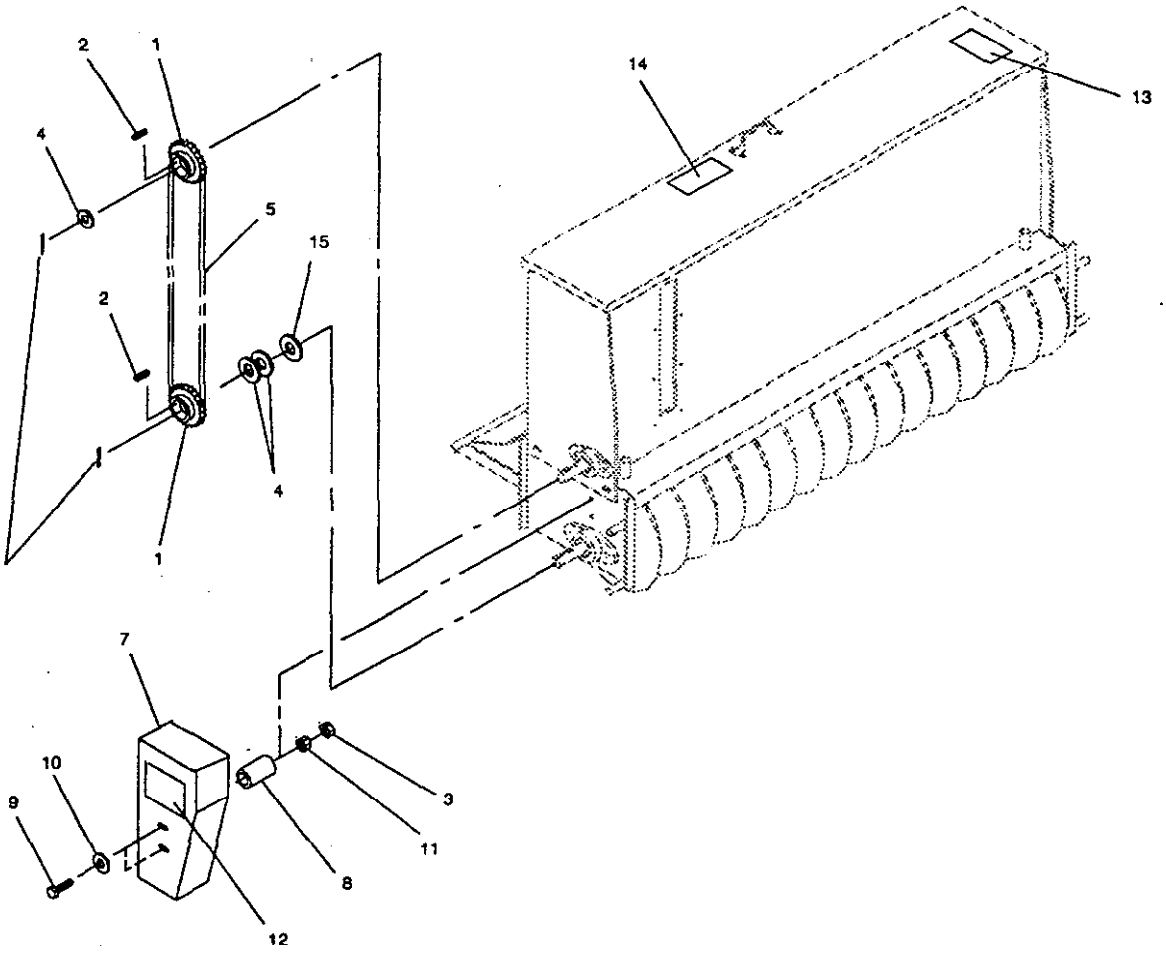

SEEDER 93
CHAIN DRIVE & GUARD ASSEMBLY

93-003

Ref. No.	Part No.	Description	No. Used
1	01-262-0450	Sprocket	2
2	48-004-5071	Key	2
3	3218-3	Jam Nut	2
4	01-168-1610	Machinery Bushing	3(var)
5	93-004-0651	Seeder Chain	1
*	01-251-0080	Offset Link	1
*	01-251-0070	Connecting Link	1
6	3272-23	Cotter Pin	2
7	93-005-0112	Chain Guard	1

Ref. No.	Part No.	Description	No. Used
8	93-004-0881	Guard Spacer	2
9	323-23	Capscrew - Hex Hd.	2
10	3256-4	Flat Washer	2
11	3217-7	Hex Nut	2
12	01-506-0050	Decal - Danger	1
13	01-506-0430	Decal - Replacement Manual	1
14	01-506-0100	Decal - Danger	1
15	01-168-1614	Machinery Bushing	1(var)

* Not Illustrated

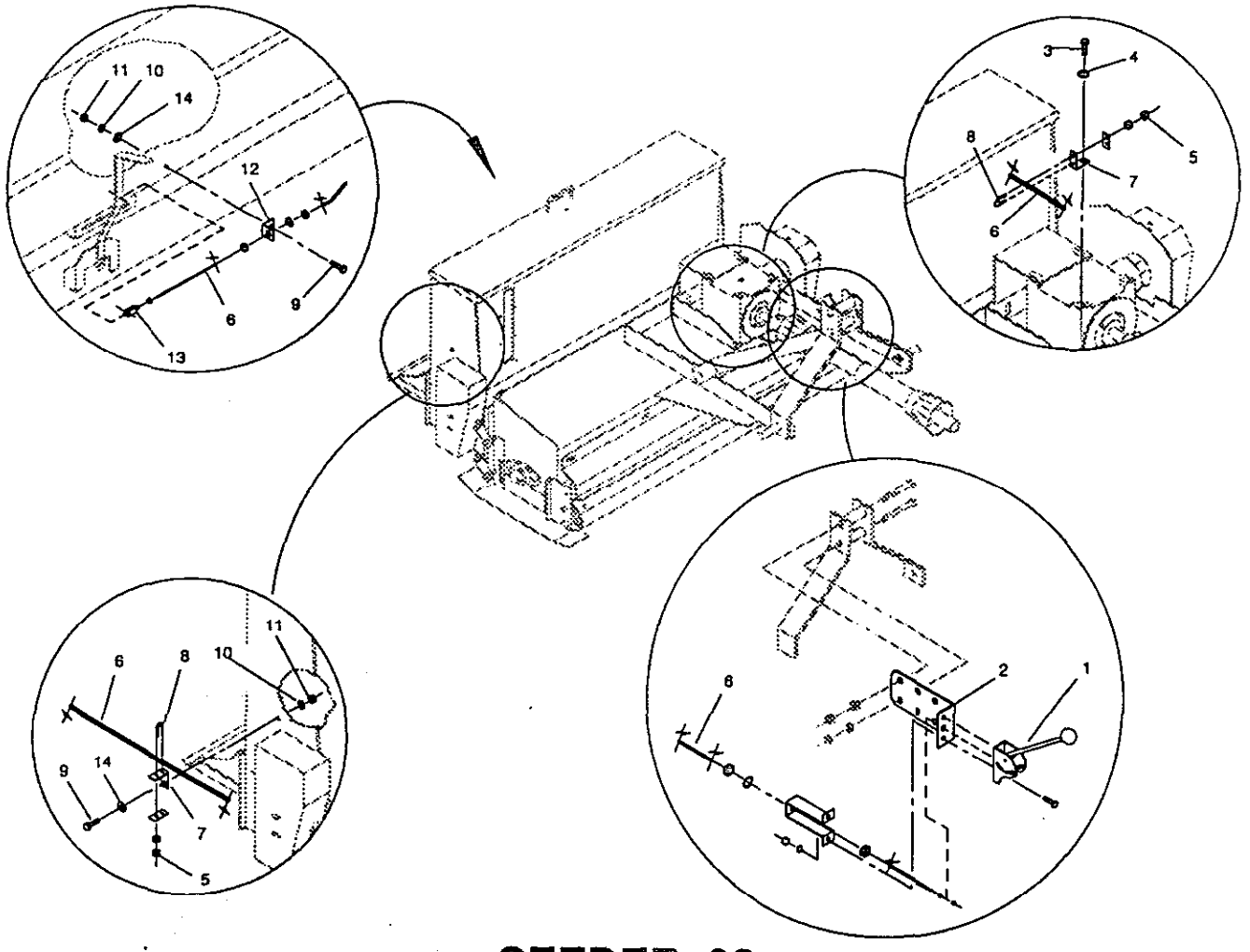

SEEDER 93
REMOTE SEED HANDLE ASSEMBLY

93-005

Ref. No.	Part No.	Description	No. Used
1	01-359-0250	Remote Handle	1
*	01-359-0360	Adapter - Clevis	1
2	93-004-0861	Handle Mount Plate	1
3	325-4	Capscrew - Hex Hd.	1
4	3253-7	Lock Washer	1
5	3217-5	Hex Nut	4
6	01-359-0230	Cable Assembly	1
7	93-004-0851	Cable Bracket	2

Ref. No.	Part No.	Description	No. Used
8	01-170-0040	Cable Bracket w/nuts	2
9	323-6	Capscrew - Hex Hd.	2
10	3253-5	Lock Washer	2
11	3217-7	Hex Nut	2
12	93-004-0841	Rear Cable Bracket	1
13	01-359-0240	Cable Clevis	1
14	3256-4	Flat Washer	2

* Not Illustrated

PART NUMBER INDEX

Part No.	Description	Pg. No.	Ref. No.	Qty.
01-100-0160	Bearing	10	9	2
01-100-0160	Bearing	9	7	2
01-100-0170	Bearing	2	2	2
01-100-0170	Bearing	3	2	2
01-100-0260	Bearing	4	3	2
01-102-0140	Bearing - Cone	8	9	4
01-103-0150	Bearing - Cup	8	8	4
01-151-0030	Cotter Pin	11	13	1
01-151-0030	Cotter Pin	4	10	6
01-158-1210	Capscrew - Slotted Hex Hd.	11	10	4
01-159-0010	Presto Pin	1	13	6
01-159-0010	Presto Pin	9	14	4
01-161-0030	Pop Rivet	10	16	16
01-161-0060	Pop Rivet	10	21	4
01-163-0030	Set Screw	5	14	1
01-168-1610	Machinery Bushing	12	4	3
01-168-1610	Machinery Bushing	9	17	3
01-168-1614	Machinery Bushing	12	15	1
01-168-1614	Machinery Bushing	9	16	4
01-168-2010	Machinery Bushing	2	10	4
01-168-2010	Machinery Bushing	3	10	4
01-168-2014	Machinery Bushing	2	11	1
01-168-2014	Machinery Bushing	3	11	1
01-168-2018	Machinery Bushing	2	9	4
01-168-2018	Machinery Bushing	3	9	4
01-170-0040	Cable Bracket	13	8	2
01-182-0620	Capscrew - Hex Hd.	10	4	4
01-182-0844	Capscrew - Hex Hd.	5	7	2
01-191-2206	Jam Nut	9	18	1
01-191-2805	Jam Nut	2	17	1
01-191-2805	Jam Nut	3	17	1
01-192-0210	Nut - Self Locking	8	13	1
01-215-0050	Grease Zerk	2	24	1
01-215-0050	Grease Zerk	3	24	1
01-251-0070	Connecting Link	12	*	1
01-251-0080	Offset Link	12	*	1
01-251-0170	Offset Link	2	*	1
01-251-0170	Offset Link	3	*	1
01-252-0010	Hitch Pin	6	8	2
01-256-0140	Handle	10	20	1
01-257-0010	Knob	11	8	1
01-260-0140	Bushing	2	21	1
01-260-0140	Bushing	3	21	1
01-261-0130	Spring	4	9	2
01-261-0140	Wiper Spring	9	10	16
01-262-0060	Sprocket	2	20	1
01-262-0060	Sprocket	3	20	1
01-262-0190	Sprocket	2	18	1
01-262-0190	Sprocket	3	18	1
01-262-0450	Sprocket	12	1	2
01-267-0020	Gearbox	5	1	1
01-267-0110	Pinion Shaft	8	6	1
01-267-0120	Cross Shaft	8	7	1
01-267-0130	Seal Kit	8	16	1
01-267-0180	Gear - Bevel	8	4	2
01-267-0210	Housing	8	1	1
01-267-0270	Cap - Open	8	2	2
01-267-0280	Housing - Pinion	8	3	1
01-267-0290	Gasket	8	5	15
01-267-0300	Spacer	8	11	2
01-267-0310	Washer	8	12	1
01-267-0320	Key	8	14	2
01-267-0330	Retaining Ring	8	15	3
01-270-1350	Door Latch	11	9	1
01-282-0210	PTO Assembly	5	11	1
01-282-0260	Shield Bearing-outer	7	6	1
01-282-0270	Shield Bearing-inner	7	7	1
01-282-0300	Cross & Bearing	7	4	2
01-282-0310	Snap Ring		7	28
01-282-0320	Grease Fitting	7	3	2
01-282-0330	Outer Yoke-tractor End	7	5	1
01-282-0340	Inner Yoke	7	8	1
01-282-0350	Unshielded Outer Half	7	10	1
01-282-0360	Unshielded Inner Half	7	11	1
01-282-0370	Shield Bearing-tractor End	7	12	1
01-282-0380	Shield Bearing	7	13	1
01-282-0390	Outer Tube Cone-tractor End	7	14	1
01-282-0400	Inner Tube Cone	7	15	1
01-282-0410	Outer Tube Shielding	7	16	1
01-282-0420	Inner Tube Shielding	7	17	1
01-282-0430	Outer Shield Half	7	18	1
01-282-0440	Inner Shield Half	7	19	1
01-282-0450	Complete Shield	7	20	1
01-282-0460	Shielded Outer Half	7	21	1
01-282-0470	Shielded Inner Half	7	22	1
01-282-0830	Twist Yoke	7	1	1
01-282-0850	Implement Yoke	7	9	1
01-283-0020	Disc	9	11	16
01-283-0090	Blade	2	13	16
01-283-0090	Blade	3	13	43
01-359-0230	Cable Assembly	13	6	1
01-359-0240	Cable Clevis	13	13	1
01-359-0250	Remote Handle	13	1	1
01-359-0360	Adapter - Clevis	13	*	1
01-405-0470	Seal	8	19	2
01-405-0480	Seal	8	18	1
01-451-0010	Pipe Plug	8	17	2
01-506-0050	Decal - Danger	12	12	1
01-506-0050	Decal - Danger	2	27	1
01-506-0050	Decal - Danger	3	27	1
01-506-0100	Decal - Danger	12	14	1
01-506-0130	Decal - Danger	1	18	1
01-506-0140	Decal - Seeder Gauge	11	21	1
01-506-0160	Decal - Important	1	17	1
01-506-0340	Decal - Danger	1	20	2
01-506-0340	Decal - Danger	11	16	1
01-506-0430	Decal - Replacement Manual	1	16	1
01-506-0430	Decal - Replacement Manual	12	13	1
01-506-0520	Decal - Toro	1	15	1
01-506-0520	Decal - Toro	11	19	1
01-506-0530	Decal - Toro	10	18	1
01-506-0610	Decal - Flow Setting	11	20	1
01-506-1010	Decal - Aerothatch 83	1	19	2
01-506-1030	Decal - Seeder 93	10	19	2
12-004-1331	Key	5	10	1
2412-133	R-Clamp	11	23	2
2412-133	R-Clamp	5	15	2
321-11	Capscrew - Hex Hd.	4	11	1
321-4	Capscrew - Hex Hd.	11	25	2
321-4	Capscrew - Hex Hd.	5	17	2
321-6	Capscrew - Hex Hd.	10	13	2
3217-12	Hex Nut	6	12	1
3217-26	Hex Nut	11	12	4
3217-5	Hex Nut	10	15	4

* Not Illustrated

PART NUMBER INDEX (Continued)

Part No.	Description	Pg. No.	Ref. No.	Qty.
3217-5	Hex Nut	11	28	2
3217-5	Hex Nut	13	5	4
3217-5	Hex Nut	4	12	2
3217-5	Hex Nut	5	20	2
3217-6	Hex Nut	5	13	2
3217-7	Hex Nut	1	8	8
3217-7	Hex Nut	10	2	12
3217-7	Hex Nut	11	7	4
3217-7	Hex Nut	12	11	2
3217-7	Hex Nut	13	11	2
3217-7	Hex Nut	2	26	2
3217-7	Hex Nut	3	26	2
3217-7	Hex Nut	9	6	36
3217-9	Hex Nut	1	12	8
3217-9	Hex Nut	11	17	1
3217-9	Hex Nut	2	6	4
3217-9	Hex Nut	3	6	4
3217-9	Hex Nut	5	8	4
3217-9	Hex Nut	6	7	3
3218-3	Jam Nut	10	3	4
3218-3	Jam Nut	11	14	1
3218-3	Jam Nut	12	3	2
3218-5	Jam Nut	11	18	1
3218-5	Jam Nut	6	11	1
3218-7	Jam Nut	6	13	1
322-20	Capscrew - Hex Hd.	5	12	1
322-6	Capscrew - Hex Hd.	4	5	6
323-23	Capscrew - Hex Hd.	12	9	2
323-4	Capscrew - Hex Hd.	9	9	16
323-6	Capscrew - Hex Hd.	1	5	8
323-6	Capscrew - Hex Hd.	10	6	4
323-6	Capscrew - Hex Hd.	13	9	2
323-6	Capscrew - Hex Hd.	8	10	18
323-6	Capscrew - Hex Hd.	9	21	32
323-7	Capscrew - Hex Hd.	9	3	4
3231-25	Carriage Bolt	10	10	4
3231-4	Carriage Bolt	11	4	2
325-22	Capscrew - Hex Hd.	6	3	1
325-4	Capscrew - Hex Hd.	13	3	1
325-4	Capscrew - Hex Hd.	5	3	2
325-5	Capscrew - Hex Hd.	1	9	4
325-6	Capscrew - Hex Hd.	11	15	1
325-6	Capscrew - Hex Hd.	2	3	4
325-6	Capscrew - Hex Hd.	3	3	4
325-6	Capscrew - Hex Hd.	5	6	4
325-6	Capscrew - Hex Hd.	6	4	2
3253-2	Lock Washer	11	11	4
3253-3	Lock Washer	11	27	2
3253-3	Lock Washer	5	19	2
3253-4	Lock Washer	4	6	6
3253-5	Lock Washer	1	7	8
3253-5	Lock Washer	10	8	8
3253-5	Lock Washer	13	10	2
3253-5	Lock Washer	2	8	2
3253-5	Lock Washer	3	8	2
3253-5	Lock Washer	9	5	36
3253-7	Lock Washer	1	11	8
3253-7	Lock Washer	13	4	1
3253-7	Lock Washer	2	5	4
3253-7	Lock Washer	3	5	4
3253-7	Lock Washer	5	4	6
3253-7	Lock Washer	6	6	3
3256-2	Flat Washer	10	14	2
3256-2	Flat Washer	11	26	2
3256-2	Flat Washer	4	7	6
3256-2	Flat Washer	5	18	2
3256-26	"SAE" Flat Washer	11	5	1
3256-4	Flat Washer	1	6	16
3256-4	Flat Washer	10	7	12
3256-4	Flat Washer	11	22	4
3256-4	Flat Washer	12	10	2
3256-4	Flat Washer	13	14	2
3256-4	Flat Washer	2	25	2
3256-4	Flat Washer	3	25	2
3256-4	Flat Washer	9	4	72
3256-6	Flat Washer	1	10	8
3256-6	Flat Washer	2	4	4
3256-6	Flat Washer	3	4	4
3256-6	Flat Washer	5	5	10
3272-23	Cotter Pin	12	6	2
3272-23	Cotter Pin	2	11	2
3272-23	Cotter Pin	3	11	2
3272-23	Cotter Pin	9	19	1
328-12	Capscrew - Hex Hd.	6	5	1
3296-22	Lock Nut	9	12	16
48-004-5071	Key	12	2	2
74-0720	Manual Tube	11	24	1
74-0720	Manual Tube	5	16	1
83-002-0022	Blade Shaft Assembly	2	*	1
83-002-0022	Blade Shaft Assembly	3	*	1
83-004-0112	Roller Shield	1	4	2
83-004-0291	Arm Hitch Mount	6	1	2
83-004-0302	Stabilizer Arm	6	2	2
83-004-0311	Blade Spacer	2	14	15
83-004-0361	Gearbox Shield	5	2	1
83-004-0371	Roller Spacer	4	8	2
83-004-0381	Top Spacer	6	9	1
83-004-0391	Bottom Spacer	6	10	1
83-004-0431	Key	2	7	1
83-004-0431	Key	3	7	1
83-004-0441	Key	5	9	1
83-004-0511	Drive Chain	2	19	1
83-004-0511	Drive Chain	3	19	1
83-004-0531	End Spacer	2	12	1
83-004-0531	End Spacer	3	12	1
83-004-0601	Guard Seal	2	22	1
83-004-0601	Guard Seal	3	22	1
83-004-0631	Blade Spacer	3	14	42
83-004-0841	Roller Shaft	4	4	1
83-004-0871	Guard Spacer	2	15	2
83-004-0871	Guard Spacer	3	15	2
83-005-0013	Main Frame	1	1	1
83-005-0033	Skid Assembly-R.H.	1	3	1
83-005-0042	Roller Assembly	4	1	1
83-005-0051	Blade Shaft	2	1	1
83-005-0051	Blade Shaft	3	1	1
83-005-0062	Chain Guard	2	23	1
83-005-0062	Chain Guard	3	23	1
83-005-0072	Wiper Assembly	4	2	1
83-005-1002	Skid Assembly-L.H.	1	2	1
83-005-1011	Locking Spacer	2	16	1
83-005-1011	Locking Spacer	3	16	1
93-002-0642	Disc Shaft Assembly	9	*	1
93-004-0121	Seed Box Mount	1	14	4

* Not Illustrated

PART NUMBER INDEX (Continued)

Part No.	Description	Pg. No.	Ref. No.	Qty.
93-004-0121	Seeder Box Mount	9	20	4
93-004-0441	Lid Chain	10	12	1
93-004-0511	Disc Spacer	9	13	15
93-004-0651	Seeder Chain	12	5	1
93-004-0711	Seeder Adjustment Rod	11	2	1
93-004-0761	Adjustment Spacer	11	6	2
93-004-0831	Peep Hole Cover	10	17	1
93-004-0841	Rear Cable Bracket	13	12	1
93-004-0851	Cable Bracket	13	7	2
93-004-0861	Handle Mount Plate	13	2	1
93-004-0881	Guard Spacer	12	8	2
93-005-0062	Slide Assembly	10	5	1
93-005-0073	Seeder Tube Assembly	9	2	16
93-005-0083	Seeder Box Assembly	10	1	1
93-005-0093	Disc Frame Assembly	9	1	1
93-005-0112	Chain Guard	12	7	1
93-005-0341	Auger Shaft	10	11	1
93-005-0351	Locking Spacer	9	15	1
93-005-0522	Disc Shaft	9	8	1
93-005-0751	Pivot Spacer	11	3	1
93-005-0811	Seeder Handle	11	1	1

PRODUCT CHANGES

In an effort to make improvements available to TORO owners as quickly as possible minor changes are incorporated into Toro's products from time to time that do not become immediately shown in the Parts Catalog. If such a change has been made in your unit which is not reflected in your manual see your TORO Distributor or an Authorized Service Dealer for information and part numbers.

IDENTIFICATION & ORDERING

MODEL AND SERIAL NUMBER

The AEROTHATCH 83 and SEEDER 93 have two identification numbers for each unit: a model and serial number. The numbers on the AEROTHATCH 83 is stamped on a plate riveted to the main frame by the gearbox. The SEEDER 93 plate is riveted to the top of the seed hopper. In any correspondence concerning the AEROTHATCH or SEEDER, supply model and serial numbers to be sure that the correct information and replacement parts are obtained.

To order replacement parts from an authorized TORO Distributor,supply the following information.

1. Model and serial numbers of the machine.

2. Part number, description and quantity of parts desired.

Note: Do not order by reference number if a parts catalog is being used; use the part number.

TABLE OF CONTENTS

Description	Page
AEROTHATCH 83	
Main Frame Assembly	1
Blade Shaft & Chain Drive Assembly-Model 44830	2
Blade Shaft & Chain Drive Assembly-Model 44831	3
Roller & Scraper Assembly	4
Gearbox Mounting Assembly	5
3 Point Hitch Assembly	6
PTO Assembly No. 01-282-0210	7
Gearbox Assembly No. 01-267-0020	8
SEEDER 93	
Disc Frame Assembly	9
Seed Box Assembly	10 - 11
Chain Drive & Guard Assembly	12
Remote Seed Handle Assembly	13
Part Number Index	14 - 16

NOTES

NOTES

MAINTENANCE CHART

Date								