Form No. 3419-465 Rev C

TORO®

Count on it.

Operator's Manual

Workman® GTX Electric Utility Vehicle

Model No. 07153—Serial No. 4000000000 and Up

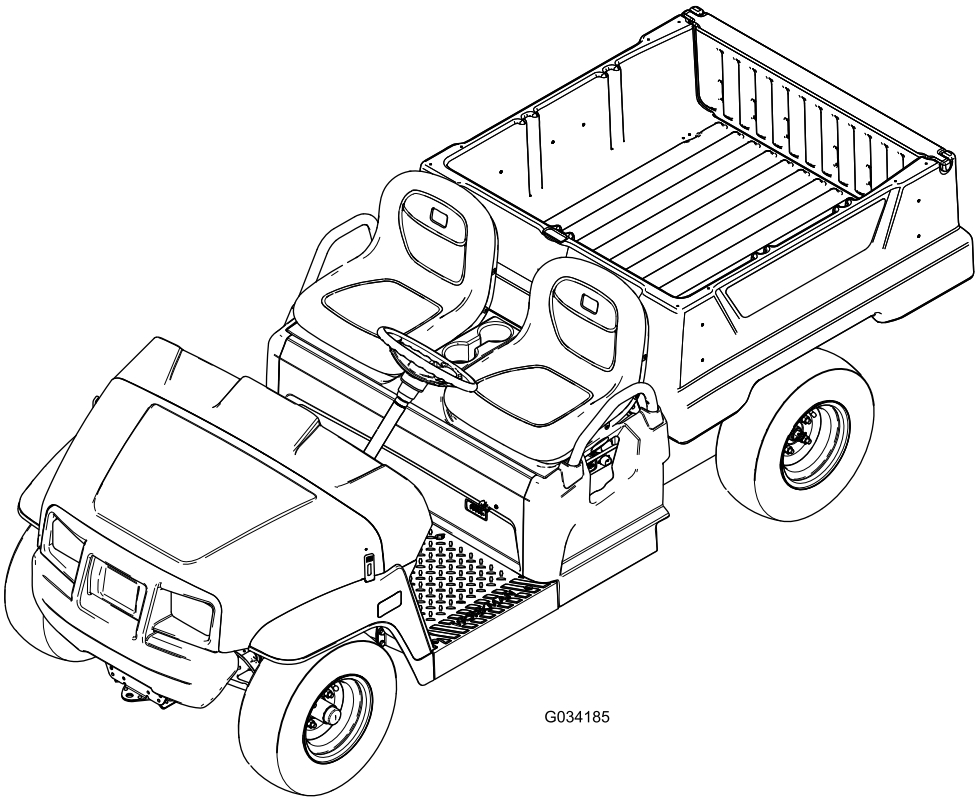

G034185

Register at www.Toro.com.
Original Instructions (EN)

CE

3419-465

This product complies with all relevant European directives; for details, please see the separate product specific Declaration of Conformity (DOC) sheet.

⚠ WARNING

CALIFORNIA
Proposition 65 Warning

The power cord on this product contains lead, a chemical known to the State of California to cause birth defects or other reproductive harm. Wash hands after handling.

Battery posts, terminals, and related accessories contain lead and lead compounds, chemicals known to the State of California to cause cancer and reproductive harm. Wash hands after handling.

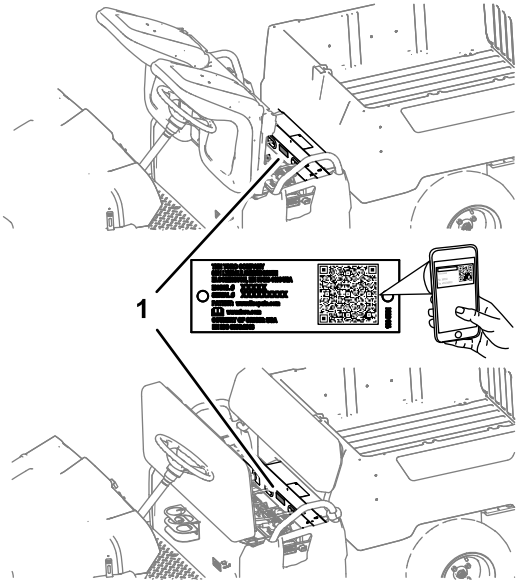

g234207

Figure 1

1. Model and serial-number location

Model No. _____

Serial No. _____

Introduction

Read this information carefully to learn how to operate and maintain your product properly and to avoid injury and product damage. You are responsible for operating the product properly and safely.

You may contact Toro directly at www.Toro.com for product and accessory information, help finding a dealer, or to register your product.

Whenever you need service, genuine Toro parts, or additional information, contact an Authorized Service Dealer or Toro Customer Service and have the model and serial numbers of your product ready. Figure 1 identifies the location of the model and serial numbers on the product. Write the numbers in the space provided.

Important: **With your mobile device, you can scan the QR code on the serial number decal (if equipped) to access warranty, parts, and other product information.**

This manual identifies potential hazards and has safety messages identified by the safety-alert symbol (Figure 2), which signals a hazard that may cause serious injury or death if you do not follow the recommended precautions.



g000502

Figure 2
Safety-alert symbol

This manual uses 2 words to highlight information. **Important** calls attention to special mechanical information and **Note** emphasizes general information worthy of special attention.

© 2021—The Toro® Company
8111 Lyndale Avenue South
Bloomington, MN 55420

Contact us at www.Toro.com.
Printed in the USA
All Rights Reserved

Contents

Safety 4
General Safety 4
Before Operation Safety 4
During Operation Safety 4
Multi-Passenger Safety 5
Slope Safety 5
Loading and Dumping Safety 6
After Operation Safety 6
Safety and Instructional Decals 7
Setup 10
1 Installing the Steering Wheel (International Models Only) 10
2 Checking the Fluid Levels and Tire Pressure 10
3 Burnishing the Brakes 11
4 Reading the Manual and Viewing the Setup Material 11
Product Overview 12
Controls 13
Specifications 16
Attachments/Accessories 16
Operation 17
Think Safety First 17
Operating the Cargo Bed 17
Using the Rear Cargo Bed Accessory Mount 20
Performing Daily Maintenance 20
Checking the Tire Pressure 20
Understanding and Using the Battery System 21
Stopping the Machine 23
Breaking in a New Machine 23
Loading the Cargo Bed 23
Transporting the Machine 24
Towing the Machine 25
Towing a Trailer 25
Maintenance 26
Recommended Maintenance Schedule(s) 26
Daily Maintenance Checklist 27
Maintaining the Machine under Special Operating Conditions 27
Pre-Maintenance Procedures 28
Maintenance Safety 28
Preparing the Machine for Maintenance 28
Lifting the Machine 29
Accessing the Hood 30
Raising and Lowering the Seat Assembly 30
Removing the Seat Assembly 31
Installing the Seat Assembly 31
Lubrication 31
Greasing the Machine 31
Greasing the Front Wheel Bearings 32
Electrical System Maintenance 35
Electrical System Safety 35
Battery Safety 35
Maintaining the Batteries 36
Replacing the Fuses 40
Maintaining the Headlights 40
Drive System Maintenance 42
Maintaining the Tires 42
Inspecting the Steering and Suspension Components 42
Adjusting the Front Wheel Alignment 43
Checking the Transaxle-Fluid Level 44
Changing the Transaxle Fluid 44
Brake Maintenance 45
Checking the Parking Brake 45
Adjusting the Parking Brake 45
Checking the Brake-Fluid Level 45
Inspecting the Brakes 46
Replacing the Service and Parking-Brake Pads 46
Changing the Brake Fluid 46
Chassis Maintenance 47
Adjusting the Cargo-Bed Latches 47
Cleaning 47
Washing the Machine 47
Storage 48
Battery Storage 48
Troubleshooting 49

Safety

Improper use or maintenance by the operator or owner can result in injury. To reduce the potential for injury, comply with these safety instructions and always pay attention to the safety-alert symbol (Figure 2), which means *Caution*, *Warning*, or *Danger*—personal safety instruction. Failure to comply with the instruction may result in personal injury or death.

This machine meets the requirements of SAE J2258.

General Safety

This product is capable of causing personal injury. Always follow all safety instructions to avoid serious personal injury.

Using this product for purposes other than its intended use could prove dangerous to you and bystanders.

- Read and understand the contents of this *Operator's Manual* before you start the engine. Ensure that everyone using this product knows how to use it and understands the warnings.
- Do not put your hands or feet near moving components of the machine.
- Do not operate the machine without all guards and other safety protective devices in place and working on the machine.
- Keep the machine a safe distance away from bystanders while it is moving.
- Keep children out of the operating area. Never allow children to operate the machine.
- Stop the machine and shut off the engine before servicing, fueling, or unclogging the machine.

Improperly using or maintaining this machine can result in injury. To reduce the potential for injury, comply with these safety instructions and always pay attention to the safety-alert symbol, which means Caution, Warning, or Danger—personal safety instruction. Failure to comply with these instructions may result in personal injury or death.

You can find additional safety information where needed throughout this manual.

Before Operation Safety

- Never allow children or untrained people to operate or service the machine. Local regulations may restrict the age of the operator. The owner is responsible for training all operators and mechanics.
- Become familiar with the safe operation of the equipment, operator controls, and safety signs.
- Know how to stop the machine and shut off the motor quickly.
- Check that all safety devices and decals are in place. Repair or replace all safety devices and replace all illegible or missing decals. Do not operate the machine unless they are present and functioning properly.

During Operation Safety

- The owner/operator can prevent and is responsible for accidents that may cause personal injury or property damage.
- Passengers should sit in the designated seating positions only. Do not carry passengers in the cargo bed. Keep bystanders and pets away from the machine during operation.
- Wear appropriate clothing, including eye protection; long pants; substantial, slip-resistant footwear; and hearing protection. Tie back long hair and do not wear jewelry.
- Do not operate the machine while ill, tired, or under the influence of alcohol or drugs.
- Operate the machine outdoors or in a well-ventilated area only.
- Do not exceed the maximum gross vehicle weight (GVW) of the machine.
- Use extra caution when operating the machine with a heavy load in the cargo bed. The heavier the load, the more difficult it is to turn or stop.
- Carrying oversized loads in the cargo bed reduces the stability of the machine.
- Carrying material that cannot be bound to the machine, such as a large tank of liquid, adversely affects the steering, braking, and stability of the machine.
- Before you start the motor, ensure that the transmission is in neutral, the parking brake is engaged, and you are in the operating position.
- You and your passengers should remain seated whenever the machine is moving. Keep your hands on the steering wheel; your passengers should use the handholds provided. Keep your arms and legs within the machine body at all times.
- Operate the machine only in good visibility. Watch for holes, ruts, bumps, rocks, or other hidden objects. Uneven terrain could overturn the machine. Tall grass can hide obstacles. Use care when approaching blind corners, shrubs, trees, or other objects that may obscure your vision.
- Always watch out for and avoid low overhangs such as tree limbs, door jambs, overhead walkways, etc.

- Look behind and down before reversing the machine to be sure of a clear path.
- Do not drive the machine near drop-offs, ditches, or embankments. The machine could suddenly roll over if a wheel goes over the edge or if the edge gives way.
- When using the machine on public roads, follow all traffic regulations and use any additional accessories that may be required by law, such as lights, turn signals, slow-moving vehicle (SMV) signs, and others as required.
- If the machine ever vibrates abnormally, stop the machine immediately, shut off the motor, wait for all movement to stop, and inspect for damage. Repair all damage to the machine before resuming operation.
- Carry a reduced load and reduce the ground speed of the machine when operating on rough, uneven terrain, and near curbs, holes, and other sudden changes in terrain. Loads may shift, causing the machine to become unstable.
- It can take longer to stop the machine on wet surfaces than on dry surfaces. To dry out wet brakes, drive slowly on level ground while putting light pressure on the brake pedal.
- Sudden changes in terrain may move the steering wheel unexpectedly, which could result in hand and arm injuries. Reduce your speed and grip the steering wheel loosely around the perimeter, keeping your thumbs out of the way of the steering wheel spokes.
- Reduce the speed when you operate the machine with the cargo bed removed. Operating the machine at high speed and then quickly stopping may cause the rear wheels to lock up, which impairs your control of the machine.
- Do not touch the motor, transmission, muffler, or muffler manifold while the motor is running, or soon after you turn off the motor, because these areas may be hot enough to cause burns.
- Do not leave a running machine unattended.
- Before leaving the operating position, do the following:
  - Park the machine on level ground.
  - Engage the parking brake.
  - Lower the cargo bed.
  - Shut off the motor and remove the key.
- Do not operate the machine when there is the risk of lightning.
- Use accessories and attachments approved by The Toro® Company only.

Multi-Passenger Safety

- You must account for the extra passengers contributing to the overall gross vehicle weight (GVW) of the machine.
- If you have a load in the cargo bed, ensure that you do not exceed the capacity of the machine by having too many passengers.
- Passengers should sit in the designated seating positions only. Do not allow passengers to sit in the cargo bed.
- You and your passengers should remain seated whenever the machine is in motion.
- The additional machine length results in a larger turn radius, so allow more space to maneuver the machine.

Slope Safety

Note: A 2-post Rollover Protection System (ROPS) is available for this machine as an accessory. Use a ROPS if you will work next to drop-offs, near water, in rough terrain, or on a slope, which could result in a rollover. Contact an authorized Toro distributor for more information.

Slopes are a major factor related to loss-of-control and tip-over accidents, which can result in severe injury or death.

- Survey the site to determine which slopes are safe for operating the machine and establish your own procedures and rules for operating on those slopes. Always use common sense and good judgment when performing this survey.
- If you feel uneasy operating the machine on a slope, do not do it.
- Keep all movement on slopes slow and gradual. Do not suddenly change the speed or direction of the machine.
- Avoid operating the machine on wet terrain. Tires may lose traction regardless if the brakes are available and functioning. A rollover can occur before the tires lose traction.
- Avoid starting, stopping, or turning the machine on a slope.
- Travel straight up and down a slope.
- If you begin to lose momentum while climbing a slope, gradually engage the brakes and slowly reverse the machine straight down the slope.
- Turning while going up or down a slope can be dangerous. If you must turn on a slope, do it slowly and cautiously.
- Heavy loads affect stability on a slope. Carry a reduced load and reduce your ground speed when operating on a slope or if the load has a high center of gravity. Secure the load to the cargo bed

of the machine to prevent the load from shifting. Take extra care when hauling loads that shift easily (e.g., liquids, rock, sand, etc.).

- Avoid stopping on a slope, especially with a load. Stopping while going down a slope takes longer than stopping on level ground. If you must stop the machine, avoid sudden speed changes, which can cause the machine to tip or roll over. Do not engage the brakes suddenly when rolling rearward, as this may cause the machine to overturn.

Loading and Dumping Safety

- Do not exceed the gross vehicle weight (GVW) of the machine when operating it with a load in the cargo bed and/or towing a trailer; refer to Specifications (page 16).
- Distribute the load in the cargo bed evenly to improve the stability and control of the machine.
- Before dumping, ensure that there is no one behind the machine.
- Do not dump a loaded cargo bed while the machine is sideways on a slope. The change in weight distribution may cause the machine to overturn.

After Operation Safety

- Allow the engine to cool before storing the machine in any enclosure.
- Shut off the fuel before storing or transporting the machine.
- Do not store the machine or fuel container where there is an open flame, spark, or pilot light, such as on a water heater or other appliance.
- Keep all parts of the machine in good working condition and all hardware tightened.
- Replace all worn, damaged, or missing decals.
- Use care when loading or unloading the machine into a trailer or a truck.
- Use full-width ramps for loading the machine into a trailer or a truck.
- Tie the machine down securely.

Safety and Instructional Decals

Safety decals and instructions are easily visible to the operator and are located near any area of potential danger. Replace any decal that is damaged or missing.

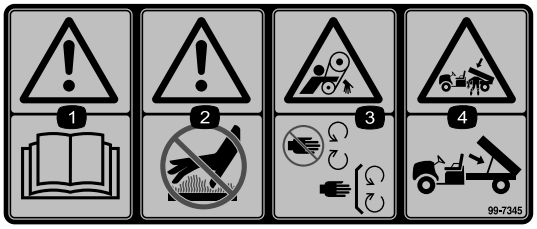

decal99-7345

99-7345

1. Warning—read the *Operator's Manual*.
2. Hot surface/burn hazard—stay a safe distance away from the hot surface.
3. Entanglement hazard, belt—stay away from moving parts; keep all guards in place.
4. Crushing hazard, cargo bed—use the prop rod to support the cargo bed.

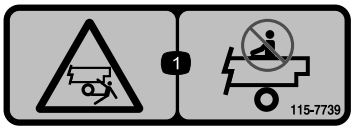

decal115-7739

115-7739

1. Falling, crushing hazard—do not carry passengers.



decal120-9570

120-9570

1. Warning—stay away from moving parts; keep all guards and shields in place.

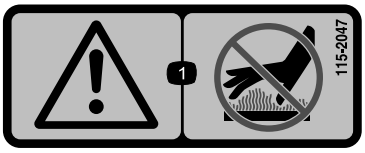

decal115-2047

115-2047

1. Warning—do not touch the hot surface.

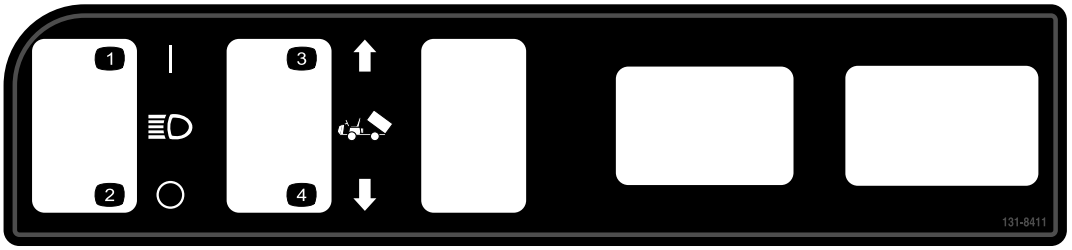

decal131-8411

131-8411

1. Headlight—on
2. Headlight—off
3. Raise the bed.
4. Lower the bed.



decal131-8412

131-8412

1. Horn
2. Forward
3. Neutral
4. Reverse
5. Off
6. On
7. Turning on—1) Sit in the driver's seat; 2) Disengage the parking brake; 3) Turn the key switch to the start position; 4) Push down on the pedal.
8. Turning off—1) Release the pedal; 2) Engage the parking brake; 3) Turn the key switch to the stop position; 4) Remove the key from the key switch.



decal131-8414

131-8414

1. Warning—read the *Operator's Manual*.
2. Warning—receive proper training before operating the machine.
3. Tipping hazard—drive slowly across or up slopes; take turns slowly; do not exceed speeds of 25 kph (16 mph); drive slowly when hauling cargo; drive slowly on uneven terrain.
4. Falling hazard; severing hazard of limbs—do not carry passengers in the bed; do not carry extra passengers in between the seats; do not put your arms or legs outside of the machine while operating.

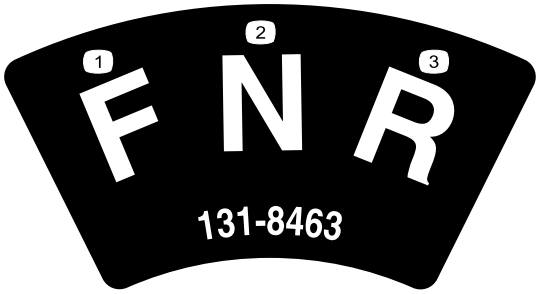

decal131-8463

131-8463

1. Forward
2. Neutral
3. Reverse

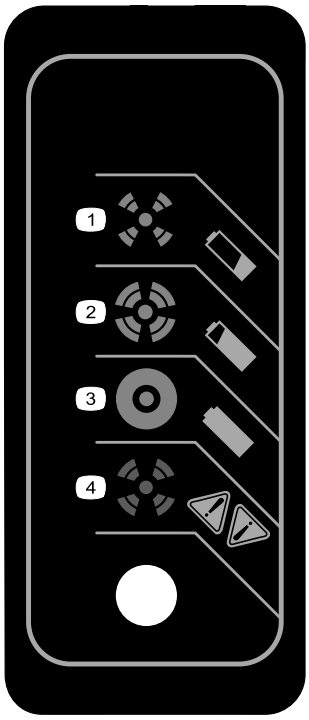

decal131-8495

131-8495

1. The battery is empty.
2. The battery is almost charged.
3. The battery is charged.
4. Charger fault; refer to the charger manual for the fault codes.

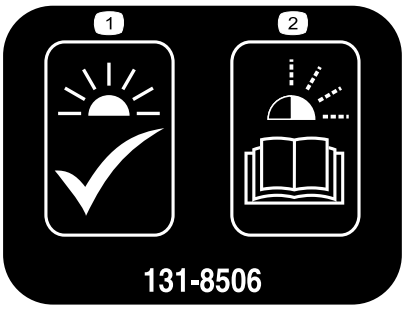

decal131-8506

131-8506

1. Solid light—unit is prepared for operation.
2. Flashing light—refer to the charger manual for the fault codes.

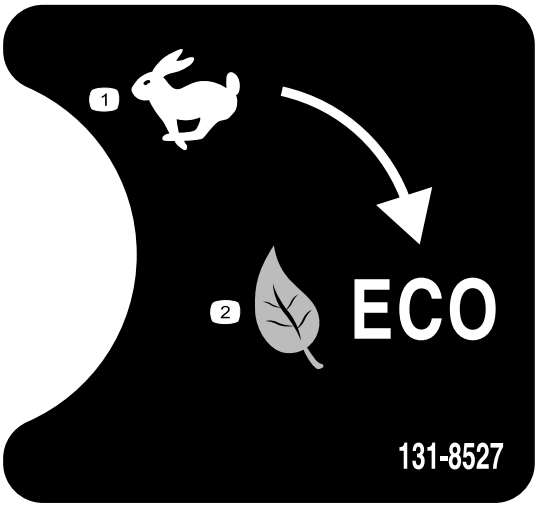

decal131-8527

131-8527

1. Performance mode
2. Eco mode

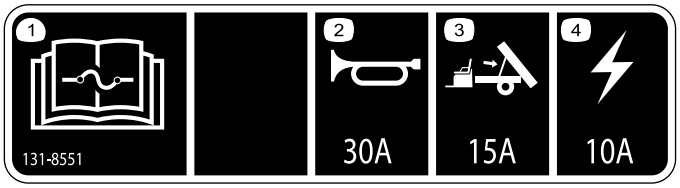

decal131-8551

131-8551

1. Read the *Operator's Manual* for fuse information.
2. Horn (30 A)
3. Optional lift kit (15 A)
4. Main power (10 A)

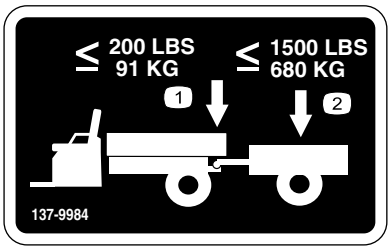

decal137-9984

137-9984

1. Do not exceed a tongue weight of 91 kg (200 lb).
2. Do not exceed a transport load of 680 kg (1,500 lb).

Setup

Loose Parts

Use the chart below to verify that all parts have been shipped.

Procedure	Description	Qty.	Use
1	Steering wheel Steering wheel cover Washer (1/2 inch) Dust cover	1 1 1 1	Install the steering wheel (International models only).
2	No parts required	–	Check the fluid levels and tire pressure.
3	No parts required	–	Burnish (break-in) the brakes.
4	Operator's Manual Engine owner's manual Registration card Predelivery Inspection Form Certificate of Quality Key	1 1 1 1 1 2	Read the Operator's Manual and view the setup material before operating the machine.

Note: Determine the left and right sides of the machine from the normal operating position.

1

Installing the Steering Wheel (International Models Only)

Parts needed for this procedure:

1	Steering wheel
1	Steering wheel cover
1	Washer (1/2 inch)
1	Dust cover

Procedure

1. If the cover is installed, remove it from the hub of the steering wheel (Figure 3).
2. Remove the locknut (1/2 inch) from the steering shaft (Figure 3).
3. Slide the steering wheel, dust cover, and washer (1/2 inch) onto the steering shaft (Figure 3).

   Note: With the front wheels straight, orient the steering wheel so that the smaller spoke on the steering wheel is vertical.
4. Secure the steering wheel to the shaft with the locknut (1/2 inch) and tighten it to 18 to 30 N·m (13 to 22 ft-lb).
5. Install the cover on the steering wheel (Figure 3).

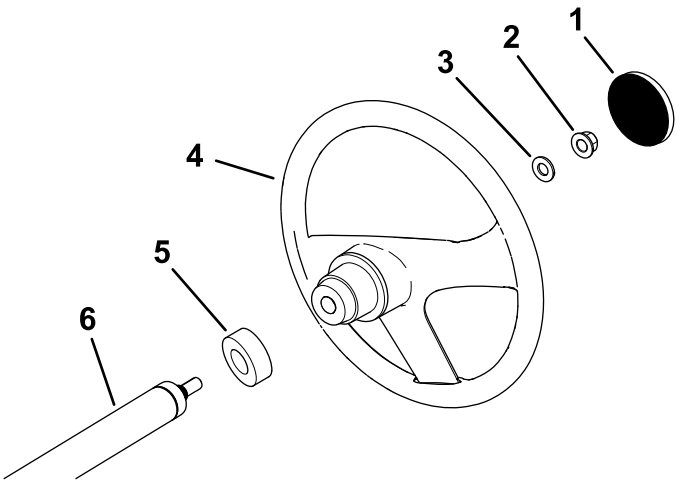

Figure 3

1. Steering wheel cover
2. Locknut (1/2 inch)
3. Washer (1/2 inch)
4. Steering wheel
5. Dust cover
6. Steering shaft

2

Checking the Fluid Levels and Tire Pressure

No Parts Required

Procedure

1. Check the water level in the batteries before you operate the machine; refer to Checking the Water Level of the Batteries (page 38).
2. Ensure that the batteries are charged; refer to Charging the Batteries (page 36).
3. Check the brake-fluid level before you operate the machine; refer to Checking the Brake-Fluid Level (page 45).
4. Check the air pressure in the tires; refer to Checking the Tire Pressure (page 20).

3

Burnishing the Brakes

No Parts Required

Procedure

To ensure optimum performance of the brake system, burnish (break-in) the brakes before use.

1. Bring the machine up to full speed, apply the brakes to rapidly stop the machine without locking up the tires.
2. Repeat this procedure 10 times, waiting 1 minute between stops, to avoid overheating the brakes.

   Important: **This procedure is most effective if the machine is loaded with 227 kg (500 lb).**

4

Reading the Manual and Viewing the Setup Material

Parts needed for this procedure:

1	*Operator's Manual*
1	Engine owner's manual
1	Registration card
1	*Predelivery Inspection Form*
1	Certificate of Quality
2	Key

Procedure

- Read the *Operator's Manual* and the engine owners's manual.
- Fill out the registration card.
- Complete the *Predelivery Inspection Form*.
- Review the *Certificate of Quality*.

Product Overview

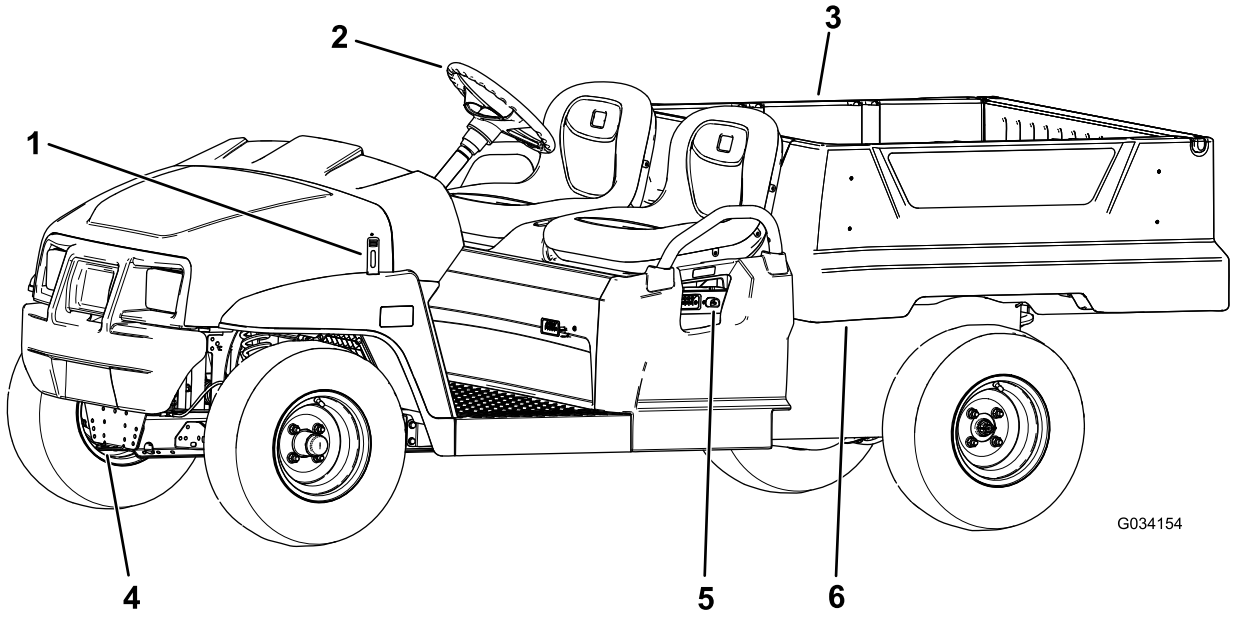

g034154

Figure 4

1. Hood latch
2. Steering wheel
3. Cargo bed
4. Towing tongue
5. Battery charger
6. Cargo-bed lever

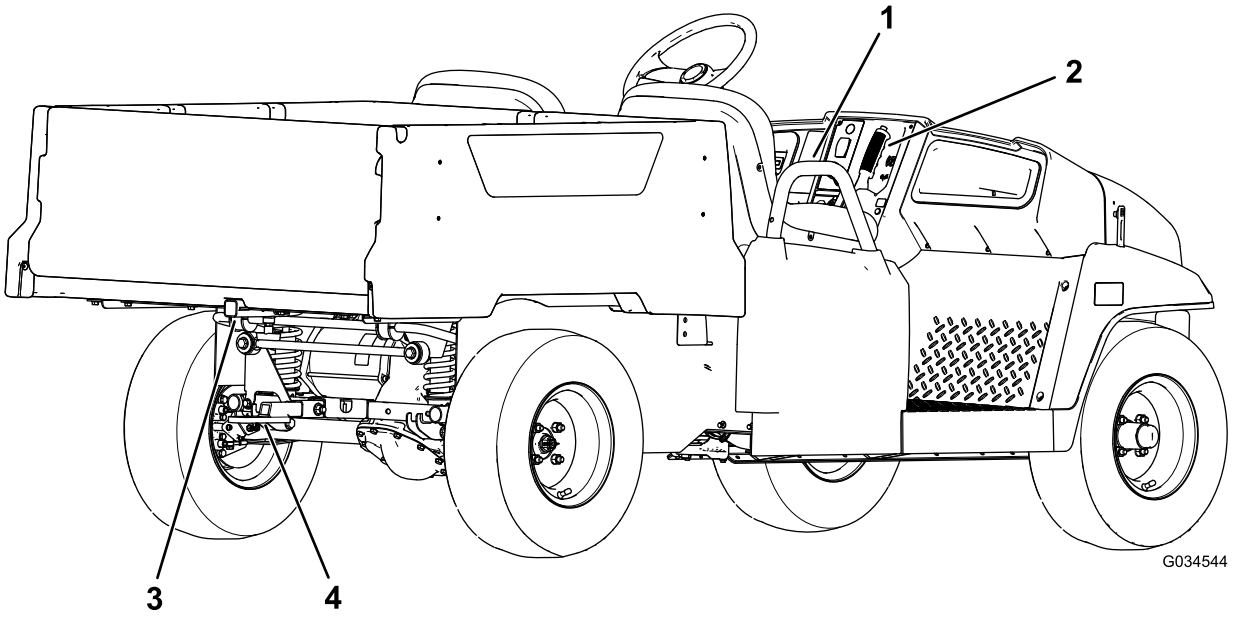

g034544

Figure 5

1. Passenger handhold
2. Parking-brake lever
3. Rear cargo-bed-accessory mount
4. Trailer hitch

Controls

Control Panel

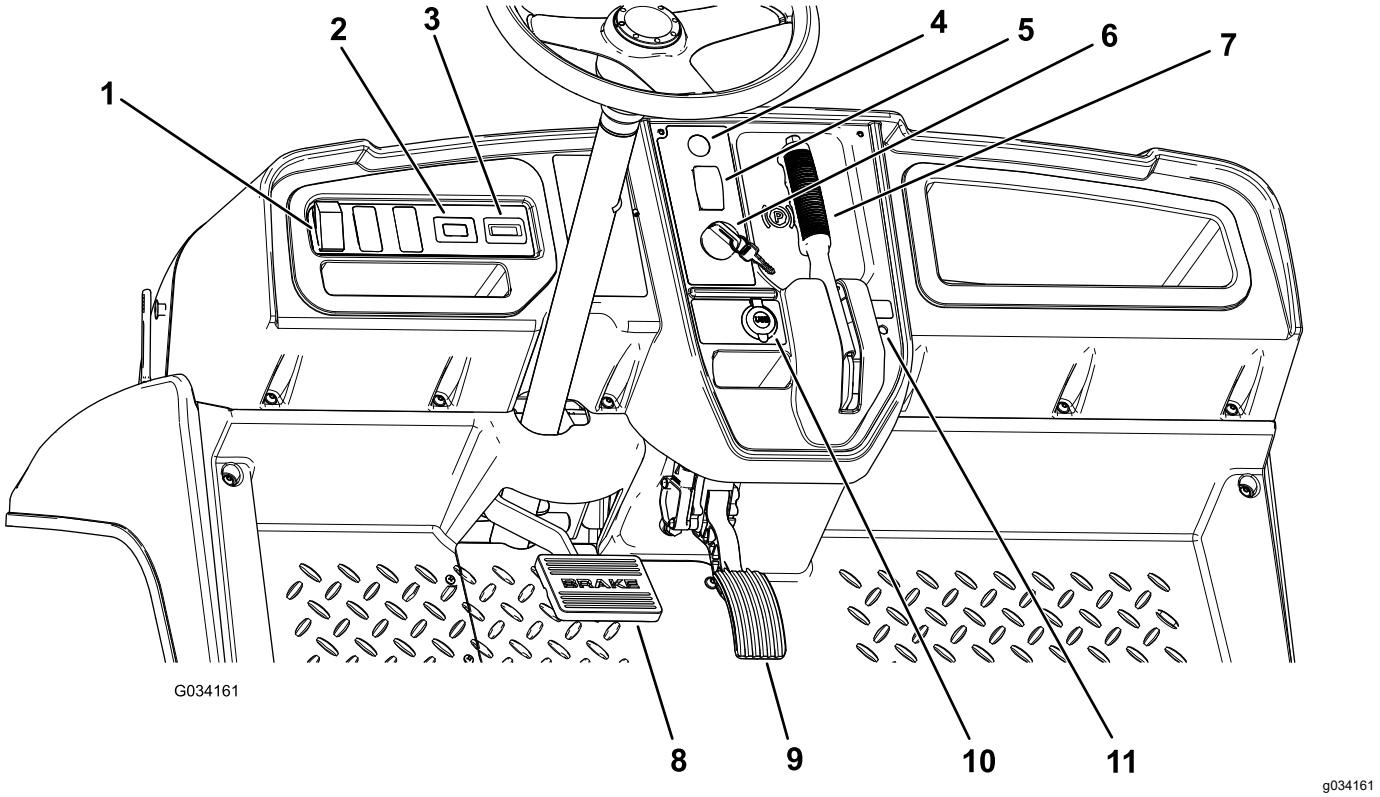

Figure 6

1. Light switch
2. Hour meter
3. Battery-discharge indicator
4. Horn button (International models only)
5. Gear-shift selector
6. Key switch
7. Parking-brake lever
8. Brake pedal
9. Accelerator pedal
10. USB power point
11. Status-indicator light

Accelerator Pedal

Use the accelerator pedal (Figure 6) to vary ground speed of the machine. Pressing down the accelerator pedal starts the machine. Pressing the pedal farther increases ground speed. Releasing the pedal slows the machine, and the machine shuts off.

The maximum forward speed in performance mode is 26 km/h (16 mph) as shown in Figure 9.

The maximum forward speed in economy mode is 19 km/h (12 mph) as shown in Figure 9.

Brake Pedal

Use the brake pedal to stop or slow the machine (Figure 6).

⚠ CAUTION

Operating a machine with worn or incorrectly adjusted brakes can may result in personal injury.

If the brake pedal travels to within 25 mm (1 inch) of the machine floor board, adjust or repair the brakes.

Parking-Brake Lever

The parking-brake lever is located on the control panel (Figure 6).

Whenever you shut off the engine, engage the parking brake to prevent the machine from accidentally moving. If the machine is parked on a steep grade, ensure that you engage the parking brake.

To engage the parking brake, pull the parking-brake lever toward you (Figure 7).

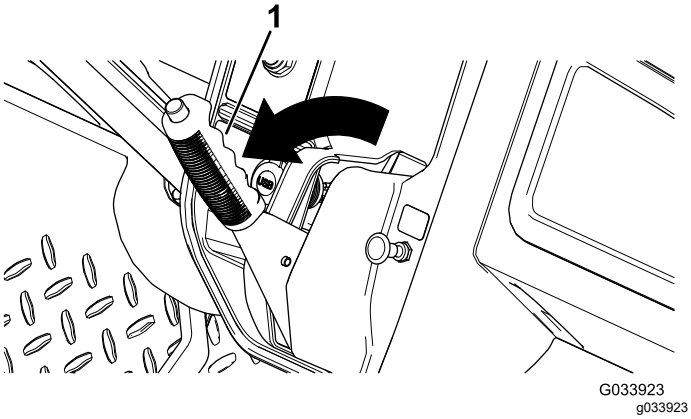

Figure 7

1. Parking-brake lever

To disengage the parking brake, push down the button on top of the parking-brake lever, pull the parking-brake lever toward you to release pressure, and then push the parking-brake lever forward (Figure 8).

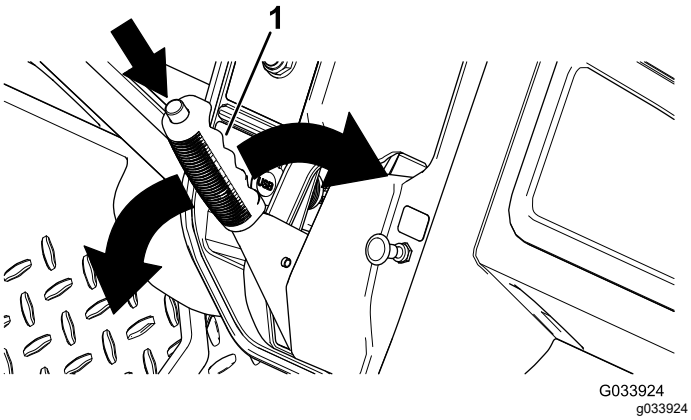

Figure 8

1. Parking-brake lever

Direction Selector

The direction selector is located to the left of the parking-brake lever. The direction selector has 3 positions: FORWARD, REVERSE, and NEUTRAL (Figure 6).

Note: The machine can be on in any of the 3 positions, but only moves in the FORWARD and REVERSE positions.

Important: **Always stop the machine before changing direction.**

Horn Button

International Models Only

The horn button is located on the control panel (Figure 6). Press the horn button to sound the horn.

Light Switch

Use the light switch (Figure 6) to illuminate the headlights. Push the light switch up to turn on the headlights. Push the light switch down to turn off the lights.

Battery-Discharge Indicator

The battery-discharge indicator is located to the left of the steering column (Figure 6). The battery-discharge indicator indicates the remaining charge in the batteries. When the batteries are fully charged, 10 indicator bars extend from the 0 to the 1 position. As you use the charge, the indicator bars disappear, starting at the right side of the meter. For detailed information on the battery meter, refer to Understanding and Using the Battery System (page 21).

Hour Meter

The hour meter is located to the right of the light switch (Figure 6). Use the hour meter to find out the total number of operating hours. The hour meter starts to function whenever you turn the key switch to the ON position or if the machine is running.

Note: When the machine is running, the hour meter blinks continuously, recording usage.

USB Power Point

The USB power point is located to the left of the parking-brake lever (Figure 6). Use the power point to power mobile devices.

Important: **When you are not using the USB power point, insert the rubber plug to prevent damage to the power point.**

Key Switch

Use the key switch (Figure 6), to run and shut off the machine.

The key switch has 2 positions: ON and OFF. Rotate the key clockwise to the ON position to operate the machine. When you stop the machine, rotate the key counterclockwise to the OFF position to shut off the machine. Remove the key whenever you leave the machine.

Supervisor Speed-Limit Switch

The supervisor speed-limit switch, located under the seat assembly, has 2 positions: PERFORMANCE and ECONOMY. Rotate the switch clockwise to the ECONOMY position to limit the maximum machine speed to 19 km/h (12 mph). Rotate the switch counterclockwise to the PERFORMANCE position to restore the maximum speed of the machine to 26 km/h (16 mph) as shown in Figure 9.

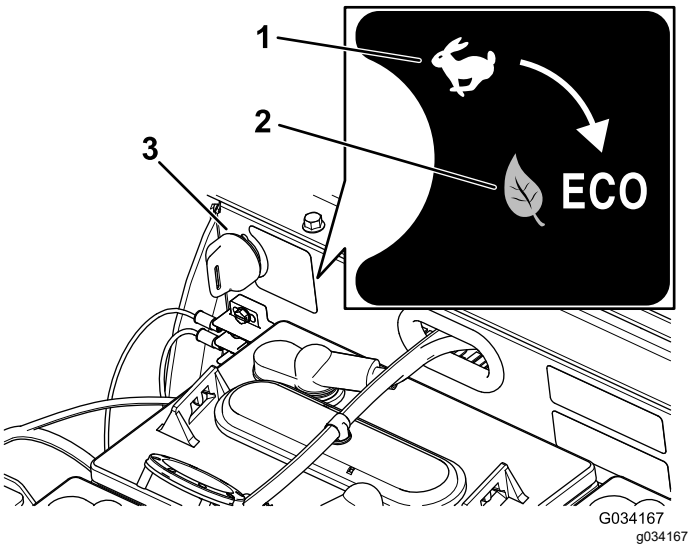

Figure 9

1. PERFORMANCE position
2. ECONOMY position
3. Supervisor speed-limit switch

Status-Indicator Light

The status-indicator light is located to the right of the parking-brake lever on the control panel (Figure 6).

When the machine is turned on, the green status-indicator light illuminates either solid or blinking.

If the light is solid, this indicates that the machine is ready for normal operation. If the light is blinking, there is an issue that needs to be resolved before continuing with normal operation of the machine.

If the status-indicator light blinks 2 times, this indicates that the parking brake is engaged while in the FORWARD or REVERSE position on the direction selector. Disengage the parking brake to shut off the status-indicator light.

Refer to Troubleshooting (page 49) if the status-indicator light blinks more than 2 times.

Passenger Handholds

The passenger handholds are located on the outside of each seat (Figure 10).

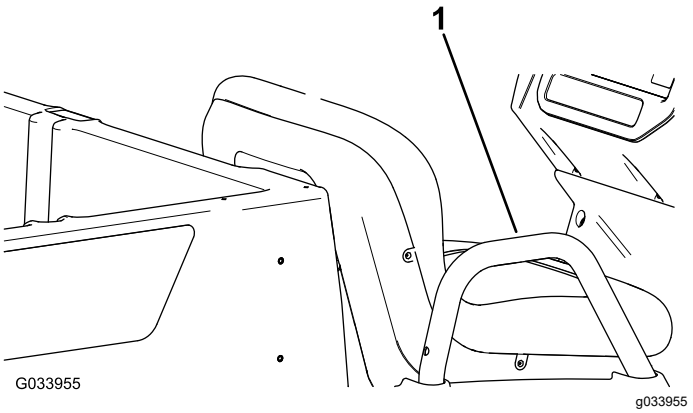

Figure 10

Passenger Side Shown

1. Passenger handhold

Specifications

Note: Specifications and design are subject to change without notice.

Base weight	Dry 633 kg (1,395 lb)
Rated capacity (on level ground)	544 kg (1,200 lb) total, including 91 kg (200 lb) operator and 91 kg (200 lb) passenger, load, accessories, and attachments
Maximum gross vehicle weight (GVW)—on level ground	1177 kg (2,595 lb) total, including all of the weights listed above
Maximum cargo capacity (on level ground)	363 kg (800 lb) total, including rear-mounted accessories
Maximum rear cargo bed accessory mount capacity	45 kg (100 lb) total
Tow capacity	Tongue weight: 91 kg (200 lb) Maximum trailer weight: 680 kg (1,500 lb)
Overall width	119 cm (47 inches)
Overall length	302 cm (119 inches)
Overall height	127.5 cm (50.2 inches)
Ground clearance	21.6 cm (8.5 inches) at the front with no load or operator 14 cm (5.5 inch) at the rear with no load or operator
Wheel base	220 cm (86.6 inches)
Wheel tread (center line to center line)	Front: 119 cm (47 inches) Rear: 119 cm (47 inches)
Cargo bed length	Inside: 102 cm (40 inches) Outside: 114.3 cm (45 inches)
Cargo bed width	Inside: 98 cm (38.5 inches) Outside of the molded fenders: 107.3 cm (42.3 inches)
Cargo bed height	28 cm (11 inches) inside

*Specifications listed are with Trojan T-125 batteries.

**Installing non-standard batteries may reduce the cargo-bed capacity.

Attachments/Accessories

A selection of Toro approved attachments and accessories is available for use with the machine to enhance and expand its capabilities. Contact your Authorized Service Dealer or Distributor or go to www.Toro.com for a list of all approved attachments and accessories.

Operation

Note: Determine the left and right sides of the machine from the normal operating position.

⚠ CAUTION

A raised bed full of material without the proper safety support may lower unexpectedly. Working under an unsupported raised bed could injure you or others.

- **Before servicing or making adjustments to the machine, park the machine on a level surface, engage the parking brake, shut off the engine, and remove the key.**
- **Remove any load material from the bed or other attachment, and insert the safety support on a fully-extended cylinder rod before working under a raised bed.**

Think Safety First

Carefully read all the safety instructions and symbols in the safety section. Knowing this information could help you or bystanders avoid injury.

⚠ DANGER

Operating on wet grass or slopes can cause sliding and loss of control.

Wheels dropping over edges can cause rollovers, which may result in serious injury, death, or drowning.

To avoid loss of control and possibility of rollover:

- **Do not operate near dropoffs or near water.**
- **Reduce speed and use extreme caution on slopes.**
- **Avoid sudden turns or rapid speed changes.**

Operating the Cargo Bed

Raising the Cargo Bed to the Dump Position

⚠ WARNING

A raised bed could fall and injure persons that are working beneath it.

- **Always use the prop rod to hold the bed up before working under the bed.**
- **Remove any load material from the bed before raising it.**

⚠ WARNING

Driving the machine with the cargo bed raised could cause the machine to tip or roll easier. You could damage the structure of the cargo bed if you operate the machine with the bed raised.

- **Operate the machine when the cargo bed is down.**
- **After emptying the cargo bed, lower it.**

⚠ CAUTION

If a load is concentrated near the back of the cargo bed when you release the latches, the bed may unexpectedly tip open, injuring you or bystanders.

- **Center loads in the cargo bed, if possible.**
- **Hold the cargo bed down and ensure that no one is leaning over the bed or standing behind it when releasing the latches.**
- **Remove all cargo from the bed before lifting the bed up to service the machine.**

1. Pull the lever on left, inside of the cargo bed toward you and lift the cargo bed up (Figure 11).

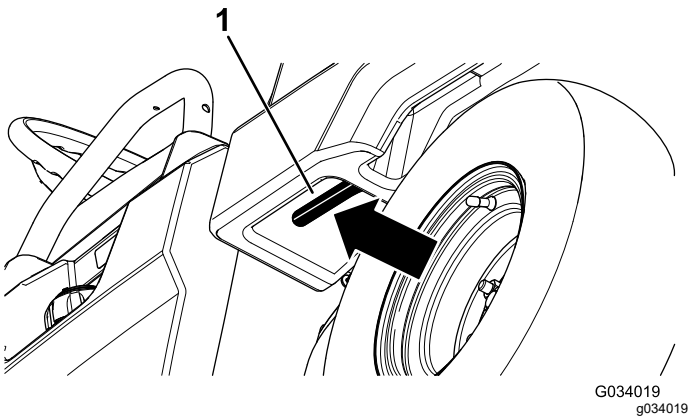

Figure 11

1. Cargo-bed lever

2. Pull the prop rod into the dump position detent slot to secure the bed for dumping (Figure 12).

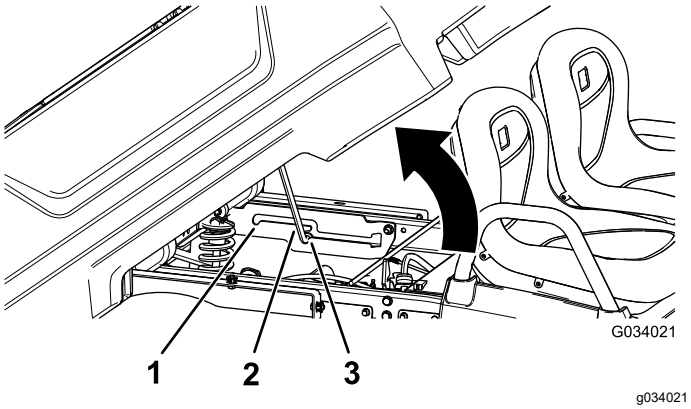

Figure 12

1. Service position detent slot
2. Prop rod
3. Dump position detent slot

Raising the Cargo Bed to the Service Position

1. Pull the lever on left, inside of the cargo bed toward you and lift the cargo bed up (Figure 11).
2. Pull prop rod into the service position detent slot to secure the bed for maintenance (Figure 12).

Lowering the Cargo Bed

⚠ WARNING

The weight of the bed may be heavy. Hands or other body parts could be crushed.

Keep your hands and other body parts away when lowering the bed.

1. Raise the cargo bed slightly by lifting up on the latch lever (Figure 11).
2. Pull the prop rod out of the detent slot (Figure 12).
3. Lower the bed until it latches securely.

Opening the Tailgate

1. Ensure that the cargo bed is down and latched.
2. Using both hands, raise the tailgate using the ridge near the top of the tailgate (Figure 13).
3. Lower the tailgate until it is flush with the bottom of the cargo bed (Figure 13).

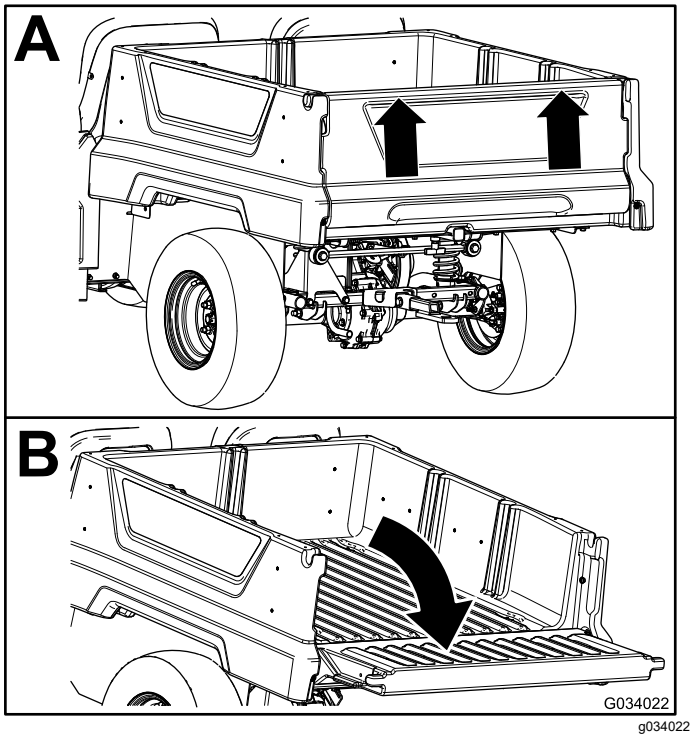

Figure 13

Closing the Tailgate

If you unloaded loose material such as sand, landscaping rock, or wood chips from the cargo bed of the machine, some of the material that you unloaded may have lodged in the hinge area of the tailgate. Perform the following steps before closing the tailgate.

1. Use your hands to remove as much of the material from the hinge area as possible.
2. Rotate the tailgate to approximately the 45° position (Figure 14).

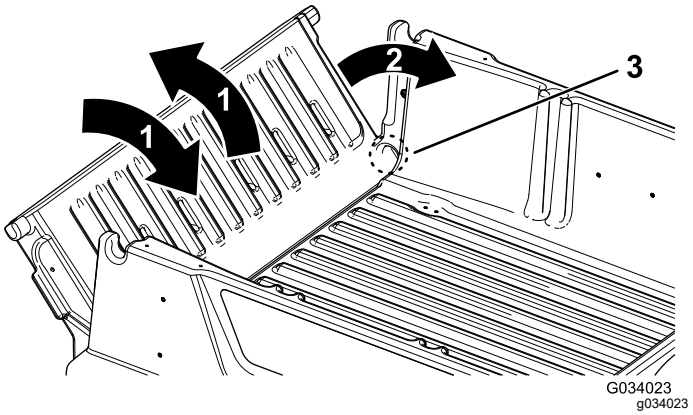

Figure 14

1. Rotate the tailgate back and forth several times.
2. Rotate the tailgate to approximately the 45° position.
3. Hinge area

3. Use a short, shaking motion to rotate the tailgate back and forth several times (Figure 14).

   Note: This action helps move material away from the hinge area.
4. Lower the tailgate and check for material remaining in the hinge area.
5. Repeat steps 1 through 4 until the material is removed from the hinge area.
6. Rotate the tailgate up and lift the tailgate into the notches in the cargo bed.

Using the Rear Cargo Bed Accessory Mount

Use the rear cargo bed accessory mount to attach accessories to the rear of the machine.

Capacity: 45 kg (100 lb)

1. Loosen the “T” handle by rotating it clockwise (Figure 15).

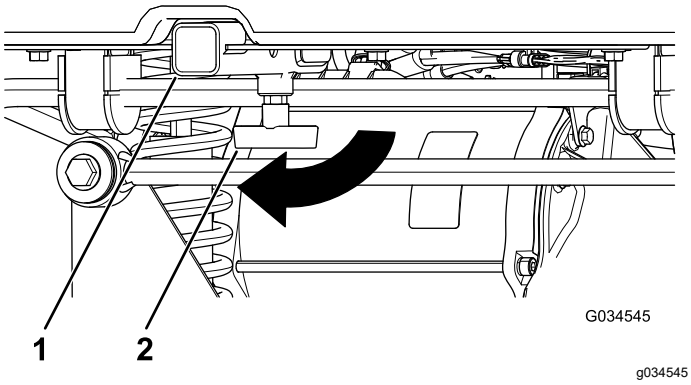

Figure 15

1. Receiver
2. “T” handle

2. Insert your accessory into the receiver until the holes align (Figure 15).
3. Secure the assembled accessory to the receiver tube using the clevis pin and hairpin cotter supplied with the accessory.
4. Tighten the “T” handle by rotating it counterclockwise (Figure 16).

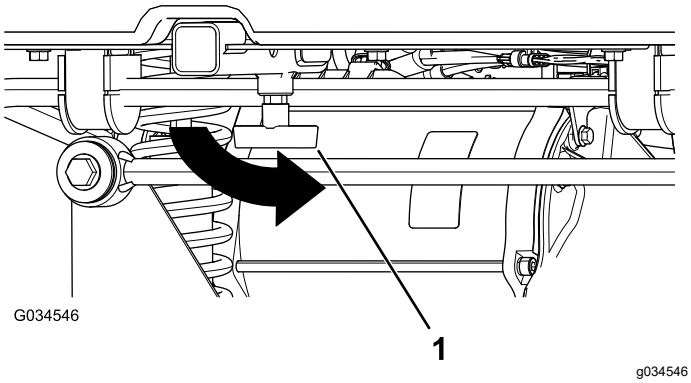

Figure 16

1. “T” handle

Performing Daily Maintenance

Before starting the machine each day, perform the Each Use/Daily procedures listed in Maintenance (page 26).

Checking the Tire Pressure

Service Interval: Before each use or daily

Front and rear tires air pressure specification: 165 to 207 kPa (24 to 30 psi)

Important: **Do not exceed the maximum air pressure indicated on the sidewall of the tire.**

Note: The air pressure needed in the tires is determined by the payload that you intend to carry.

1. Check the air pressure in the tires.
   - Use lower air pressure in the tires for lighter payloads, for less soil compaction, for a smoother ride, and to minimize tire marks on the ground.
   - Use higher air pressure in the tires for carrying heavier payloads at higher speeds.
2. If necessary, adjust the air pressure in the tires by adding or removing air in the tires.

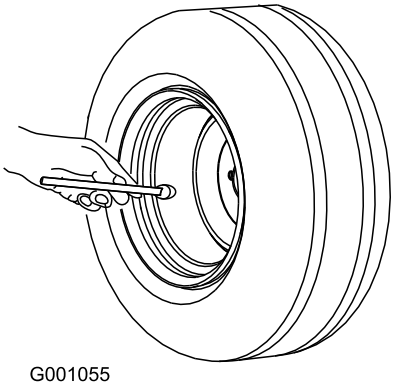

Figure 17

Understanding and Using the Battery System

Understanding Deep-Cycle Batteries

The machine contains 8 deep-cycle, lead-acid batteries that supply power to the motor and accessories. A deep-cycle battery is not the same as an automobile battery. An automobile battery is designed to provide a surge of power to start the machine and moderate power to run the lights and accessories when the motor if off or idling. The alternator then continuously charges as the automobile runs. As such, an automobile battery seldom drops below 90% of the maximum charge level.

A deep-cycle battery is designed to be a primary power source to provide a sustained output. Deep-cycle batteries are typically discharged as low as 20 to 30% of the maximum charge level. A discharge this low is considered a deep discharge.

Important: **Repeated deep-discharge cycles reduces the battery life.**

Lead-acid batteries produce electricity through a chemical reaction between lead plates and sulfuric acid. Charging a battery reverses the chemical reaction, allowing the battery to once again produce electricity.

A battery is a perishable item that has a limited lifetime (Figure 18). When a battery is new, it requires a break-in period to establish efficient electrical production. This break in period usually requires 100 to 150 discharge/charge cycles.

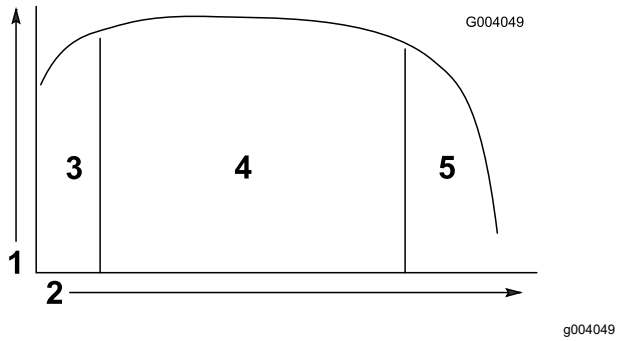

Figure 18
Battery-Lifetime Table

1. Battery capacity
2. Discharge/charge cycles
3. Break-in period (100 to 150 cycles)
4. Prime battery life
5. End of the battery life

After the break-in period, the battery maintains a high capacity for many cycles. The number of cycles that a battery performs depends on the following:

- Battery maintenance—improper maintenance severely reduces the life of the batteries.
- Depth of discharge between charge cycles—**the deeper the batteries are discharged on a regular basis between charges, the shorter the service life the batteries will have.**
- Charge frequency—fully charge the batteries whenever possible.

  Important: **Fully discharging the batteries damages them and reduces their life.**
- Low water levels—**if the lead plates become exposed, it may permanently damage the batteries.** Perform the following to maintain the electrolyte level:

  After fully charging the batteries, fill the batteries with distilled or deionized water; refer to Checking the Water Level of the Batteries (page 38) and Adding Distilled or Deionized Water to the Batteries (page 38).

  Important: **Fully charge the batteries before adding the water to the batteries. While charging, the electrolyte increases in volume, and filling a low battery before fully charging the batteries can cause the electrolyte to overflow and leak out of the vent.**

At the end of the battery life, the batteries gradually lose electric capacity.

Using the Battery System

When your batteries are fully charged, the tenth bar (far right) illuminates on the battery-discharge indicator (Figure 19).

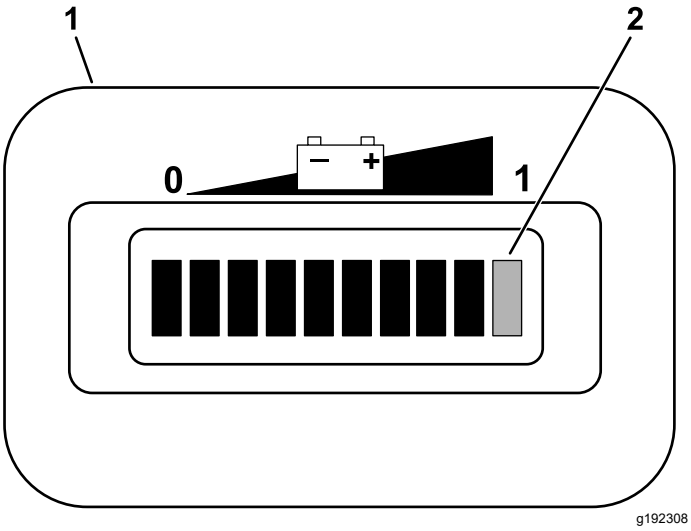

Figure 19

1. Battery-discharge indicator
2. Charge-indicator bars

As you use the machine, the bars disappear as the electrical capacity of the batteries is used.

When only the second bar from the left remains on the battery-discharge indicator, it is a good time to charge (Figure 20).

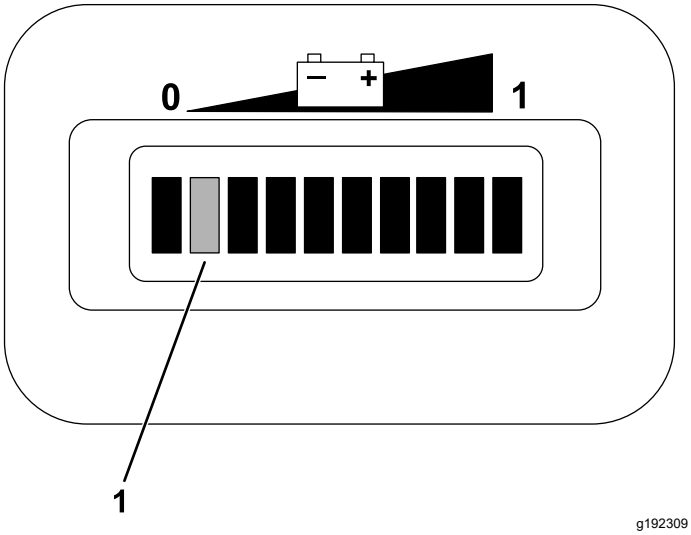

Figure 20

1. The 2 left bars alternately blink until you charge the batteries.

If you continue to use the machine with only 2 bars remaining, bars 1 and 2 alternately flash.

Important: **When only the second bar from the left remains on the battery-discharge indicator, the machine may enter a reduced-speed mode; this mode aids in protecting the batteries, but prolonged operation in this mode can damage the batteries and/or the machine. Avoid draining your batteries down to the second bar from the left to prevent this issue. Charge the batteries immediately.**

If the batteries become fully discharged, the machine shuts down. *Do not allow the batteries to become fully discharged.*

Important: **To obtain maximum battery life, always charge the batteries before the charge reaches the second bar from the left on the screen. Regularly depleting the batteries to lower than the second bar from the left reduces the life of the batteries.**

Stopping the Machine

Important: **When stopping the machine on an incline, use the service brakes to stop the machine and engage the parking brake to hold the machine in place. Using the accelerator to stall the machine on the hill can overheat the motor or drain the batteries.**

1. Remove your foot from the accelerator pedal.
2. Slowly press the brake pedal to apply the service brakes until the machine comes to a complete stop.

   Note: The stopping distance may vary depending on the machine load and speed.

Breaking in a New Machine

Service Interval: After the first 100 hours—Perform the breaking in a new machine guidelines.

Perform the breaking in a new machine guidelines to provide proper performance and long life for the machine.

- Check the brake fluid and the water level in the batteries regularly.
- Avoid hard braking situations for the first several hours of new machine break-in operation. New brake linings may not be at optimum performance until several hours of use has caused the brakes to become burnished (broken-in).
- Refer to Maintenance (page 26) for any special low hour checks.
- Check the front suspension positioning and adjust it if necessary.

Loading the Cargo Bed

Use the following guidelines when loading the cargo bed and operating the machine:

- Observe the weight capacity of the machine and limit the weight of the load that you carry in the cargo bed as described in Specifications (page 16) and on the gross vehicle weight tag of the machine.

  Note: The load rating is specified for machine operation on a level surface only.
- Reduce the weight of the load that you carry in the cargo bed when operating the machine on hills and rough terrain.
- Reduce the weight of the load that you carry when the materials are tall (and have a high center of gravity), such as a stack of bricks, landscaping timbers, or fertilizer bags. Distribute the load as low as possible to ensure that the load does not reduce your ability to see behind the machine when operating it.
- Keep loads centered by loading the cargo bed as follows:
  - Evenly position the weight in the cargo bed from side to side.

    Important: **Tipping over is more likely to occur if the cargo bed is loaded to 1 side.**
  - Evenly position the weight in the cargo bed from front to back.

    Important: **Loss of steering control or the machine may tip over if you position the load behind the rear axle and the traction on the front tires is reduced.**
- Use extra caution when transporting oversized loads in the cargo bed, particularly when you cannot center the wight of the oversize load to the cargo bed.
- Whenever possible, secure the load by binding it to the cargo bed so that it does not shift.
- When transporting liquid in a large tank (such as a sprayer tank), use caution when driving the machine uphill or downhill, when suddenly changing speed or stopping, or when driving over tough surfaces.

The capacity of the cargo bed is 0.28 m^3 (10 ft^3). The amount (volume) of material that you can place in the bed without exceeding the load ratings of the machine can vary greatly depending on the density of the material.

Refer to the following table for load volume limits with various materials:

Material	Density	Maximum Cargo Bed Capacity (on level ground)
Gravel, dry	1522 kg/m³ (95 lb/ft³)	Full
Gravel, wet	1922 kg/m³ (120 lb/ft³)	3/4 Full
Sand, dry	1442 kg/m³ (90 lb/ft³)	Full
Sand, wet	1922 kg/m³ (120 lb/ft³)	3/4 full
Wood	721 kg/m³ (45 lb/ft³)	Full
Bark	<721 kg/m³ (<45 lb/ft³)	Full
Earth, packed	1602 kg/m³ (100 lb/ft³)	3/4 Full (approximately)

Transporting the Machine

Use a trailer with full-width ramps to move the machine a long distance. Ensure that you secure the machine to the trailer. Refer to Figure 21 and Figure 22 for the tie-down locations on the machine.

Note: Load the machine on the trailer with the front of the machine facing forward. If that is not possible, secure the machine hood to the frame with a strap, or remove the hood and transport and secure it separately or the hood may blow off during transport.

⚠ CAUTION

Loose seats may fall off the machine and trailer when transporting the machine, and the seats may land on another machine or obstruct the roadway.

Remove the seats or make sure that the seats are securely fastened to the coupling in the seat shroud.

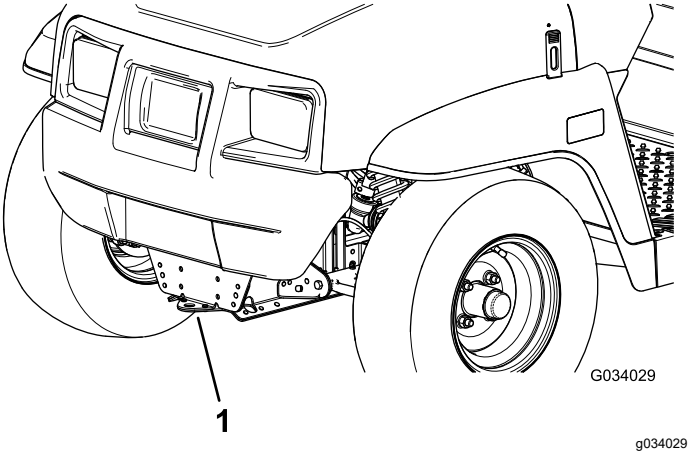

Figure 21

1. Towing tongue and tie-down point (front of the machine)

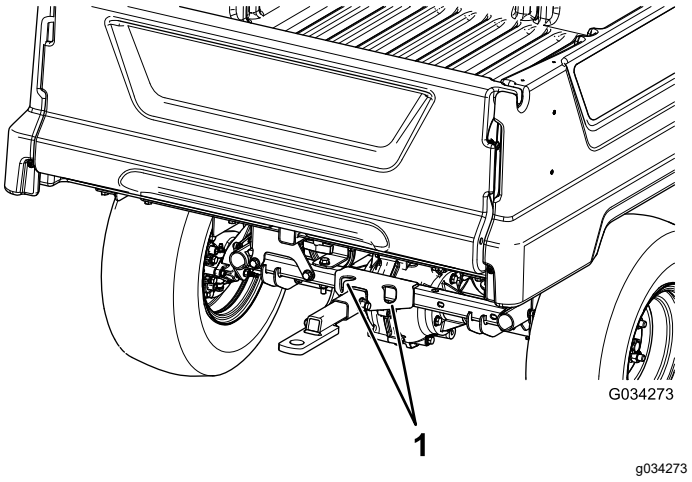

Figure 22

1. Rear tie-down points

Towing the Machine

In case of an emergency, you can tow the machine for a short distance; however, this should not be a standard operating procedure.

⚠ WARNING

Towing at excessive speeds could cause a loss of steering control, resulting in personal injury.

Never tow the machine at faster than 8 km/h (5 mph).

Towing the machine is a 2-person job. If you must move the machine a considerable distance, transport it on a truck or trailer; refer to Transporting the Machine (page 24).

1. Shut off the machine and remove the key.

   Important: **If you tow the machine with the key in the On position, the electrical system may be damaged.**

2. Affix a tow line to the tongue at the front of the machine's frame (Figure 21).
3. Disengage the parking brake.

Towing a Trailer

The machine is capable of pulling trailers. Tow hitches are available for the machine, contact your Authorized Toro Distributor for details.

When hauling cargo or towing a trailer, do not overload your machine or trailer. Overloading either the machine or the trailer can cause poor performance or damage to the brakes, axle, motor, transaxle, steering, suspension, body structure, or tires.

Always load a trailer with 60% of the cargo weight in the front of the trailer. This places approximately 10% of the gross trailer weight (GTW) on the tow hitch of the machine.

The maximum cargo load should not exceed 680 kg (1,500 lb), including the GTW. For example, if the GTW is 181.5 kg (400 lb) then the maximum cargo load is 544 kg (1,200 lb) including operator(s).

To provide adequate braking and traction, always load the cargo bed when using a trailer. Do not exceed the GTW or GVW limits.

Avoid parking a machine with a trailer on a hill. If you must park on a hill, engage the parking brake and block the tires of the trailer.

Maintenance

Note: Determine the left and right sides of the machine from the normal operating position.

Note: Download a copy of the electrical schematic by visiting www.Toro.com and searching for your machine from the Manuals link.

⚠ WARNING

Failure to properly maintain the machine could result in premature failure of machine systems, causing possible harm to you or bystanders.

Keep the machine well maintained and in good working order as indicated in these instructions.

Recommended Maintenance Schedule(s)

Maintenance Service Interval	Maintenance Procedure
After the first 100 hours	• Perform the breaking in a new machine guidelines.
Before each use or daily	• Check the tire pressure. • Charge the batteries. • Check the water level of the batteries. • Check the brake-fluid level.
Every 25 hours	• Clean the batteries. • Check the water level of the batteries and add distilled or deionized water to the batteries (if necessary).
Every 100 hours	• Grease the bearings and bushings. • Check the condition of the tires and rims. • Torque the wheel-lug nuts. • Inspect the steering and suspension for loose or damaged components. • Check the front wheel camber and toe-in. • Check the transaxle-fluid level. • Check the transaxle for leaks. • Inspect the brakes.
Every 300 hours	• Grease the front wheel bearings.
Every 400 hours	• Replace the service and parking-brake pads.
Every 800 hours	• Change the transaxle fluid.
Every 1,000 hours	• Change the brake fluid.

Daily Maintenance Checklist

Duplicate this page for routine use.

Maintenance Check Item	For the week of:						
	Monday	Tuesday	Wednesday	Thursday	Friday	Saturday	Sunday
Check brake and parking brake operation.							
Check gear shift/neutral operation.							
Check the water level of the batteries.							
Check brake-fluid level.							
Check unusual operating noises.							
Check tire pressure.							
Check fluid leaks.							
Check instrument operation.							
Check accelerator operation.							
Lubricate all grease fittings.							
Touch up any damaged paint.							

Maintaining the Machine under Special Operating Conditions

Important: **If the machine is subjected to any of the conditions listed below, perform maintenance twice as frequently:**

- Desert operation
- Cold climate operation—below 10°C (50°F)
- Trailer towing
- Frequent operation in dusty conditions
- Construction work
- After extended operation in mud, sand, water, or similar dirty conditions, have your brakes inspected and cleaned as soon as possible. This prevents any abrasive material from causing excessive wear.

Pre-Maintenance Procedures

⚠ WARNING

Raise the cargo bed before performing maintenance. A raised cargo bed can fall and injure persons that are underneath it.

- **Always use the prop rod to hold the cargo bed up before working underneath it.**
- **Remove any load material from the cargo bed before working underneath it.**

Maintenance Safety

- Do not allow untrained personnel to service the machine.
- Before servicing or making any adjustments to the machine, park the machine on a level surface, engage the parking brake, shut off the motor, and remove the key to prevent accidental starting of the machine.
- Use jack stands to support the machine or components when required.
- Do not work under a raised bed without the proper bed safety support in place.
- Ensure that all hydraulic-line connectors are tight and that all the hydraulic hoses and lines are in good condition before applying pressure to the system.
- Before disconnecting or performing any work on the hydraulic system, relieve all pressure in the system by shutting off the motor, cycling the dump valve from raise to lower, and/or lowering the cargo bed and attachments. Place the remote hydraulics lever in the float position. If the bed must be in raised position, secure it with the safety support.
- Carefully release pressure from components with stored energy.
- To ensure that the entire machine is in good condition, keep all the nuts, bolts, and screws properly tightened.
- To reduce the potential fire hazard, keep the motor area free of excessive grease, grass, leaves, and accumulation of dirt.
- If possible, do not perform maintenance while the motor is running. Keep away from moving parts.
- If you must run the motor to perform a maintenance adjustment, keep your hands, feet, clothing, and any parts of the body away from the motor and any moving parts. Keep bystanders away from the machine.
- Check the parking brake operation frequently. Adjust and service as required.
- Keep all parts in good working condition and all hardware tightened. Replace all worn or damaged decals.
- Never interfere with the intended function of a safety device or reduce the protection provided by a safety device. Check their proper operation regularly.
- If major repairs are ever necessary or assistance is required, contact an authorized Toro distributor.
- To ensure optimum performance and safety, always purchase genuine Toro replacement parts and accessories. Replacement parts and accessories made by other manufacturers could be dangerous. Altering this machine in any manner may affect the operation of the machine, performance, durability, or its use may result in injury or death. Such use could void the product warranty of The Toro® Company.

Preparing the Machine for Maintenance

1. Park the machine on a level surface.
2. Engage the parking brake.
3. Shut off the engine and remove the key.

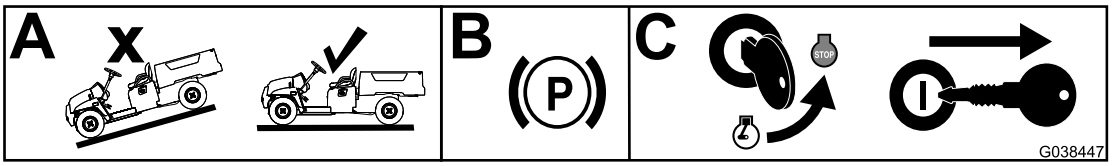

g038447

Figure 23

Lifting the Machine

⚠ DANGER

The machine may be unstable when using a jack. The machine could slip off the jack, injuring anyone beneath it.

- **Do not start the machine while the machine is on a jack.**
- **Always remove the key from the key switch before getting off the machine.**
- **Block the tires when the machine is supported by lifting equipment.**
- **Use jack stands to support the machine once you have lifted it.**

Important: **Whenever you run the machine for routine maintenance and/or diagnostics, ensure that the rear wheels of the machine are 25 mm (1 inch) off the ground, with the rear axle supported on jack stands.**

- The lifting point at the front of the machine is located at the front of the frame, behind the towing tongue (Figure 24).

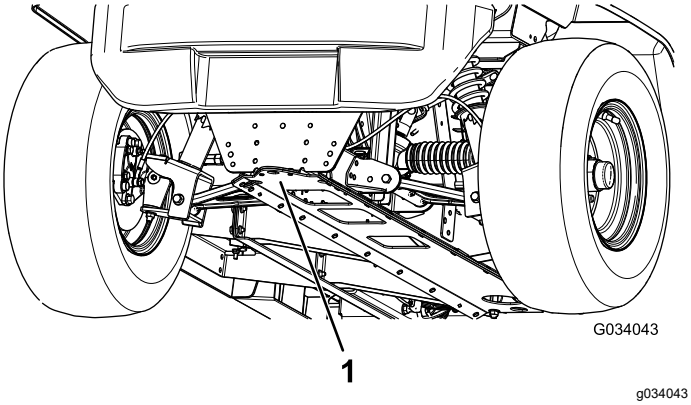

Figure 24

1. Front lifting point

- The lifting point at the rear of the machine is located under the axle tubes (Figure 25).

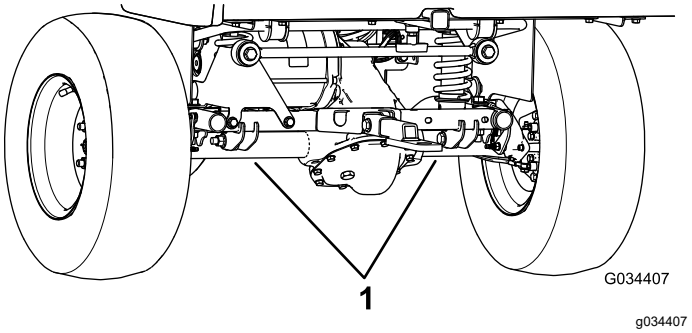

Figure 25

1. Rear lifting points

Accessing the Hood

Raising the Hood

1. Lift up the handle of the rubber latches on each side of the hood (Figure 26).

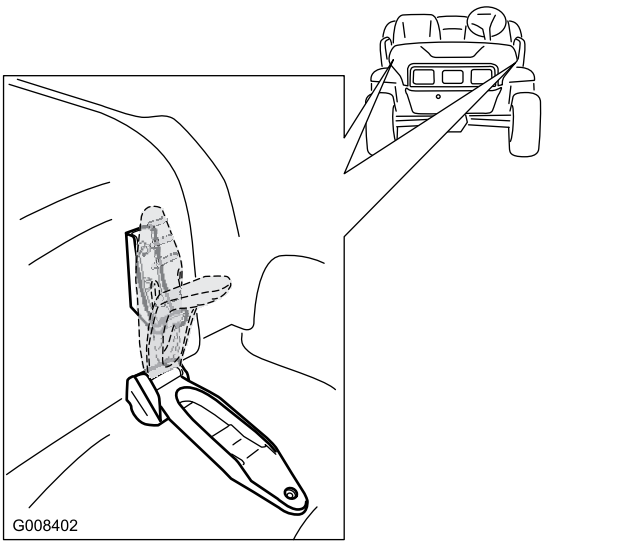

g008402

Figure 26

2. Raise the hood.

Closing the Hood

1. Gently lower the hood.
2. Secure the hood by aligning the rubber latches onto the latch anchors on each side of the hood (Figure 26).

Raising and Lowering the Seat Assembly

To raise the seat assembly, push the seat assembly forward until it rests on the steering wheel (Figure 27).

To lower the seat assembly, push the seat assembly rearward until it seats back into the original position (Figure 27).

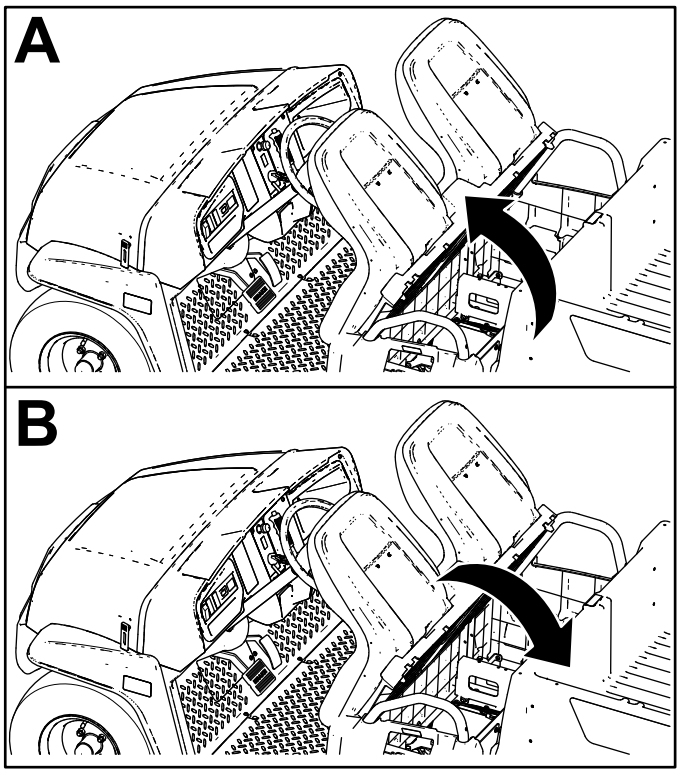

g190066

Figure 27

Removing the Seat Assembly

1. Push the seat assembly forward to the raised position (Figure 27).
2. Slide the seat assembly to the side out of the pins, and lift the seat assembly upward (Figure 28).

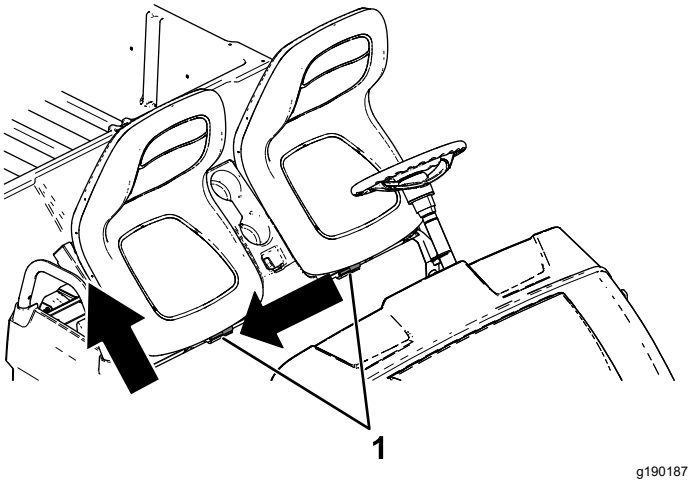

Figure 28

1. Pins

Installing the Seat Assembly

Slide the seat assembly onto the pins and lower the seat assembly (Figure 29).

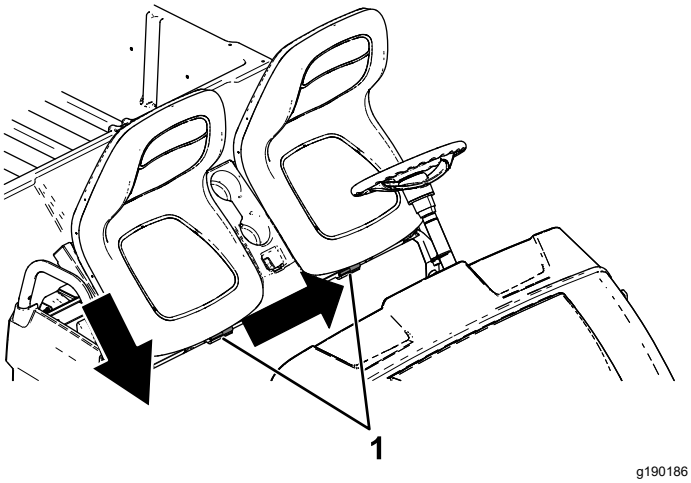

Figure 29

1. Pins

Lubrication

Greasing the Machine

Service Interval: Every 100 hours/Yearly (whichever comes first)—Grease the bearings and bushings. Grease the machine more frequently when using it for heavy-duty operations.

Grease Type: No. 2 lithium grease

1. Use a rag to wipe the grease fitting clean so that foreign matter cannot be forced into the bearing or bushing.
2. With a grease gun, apply 1 or 2 pumps of grease into the grease fittings on the machine.
3. Wipe the excess grease off the machine.

The grease fittings are located at the inner end of the control arms, the tie-rod ball joint, and the outer end of the control arms (Figure 30 and Figure 31).

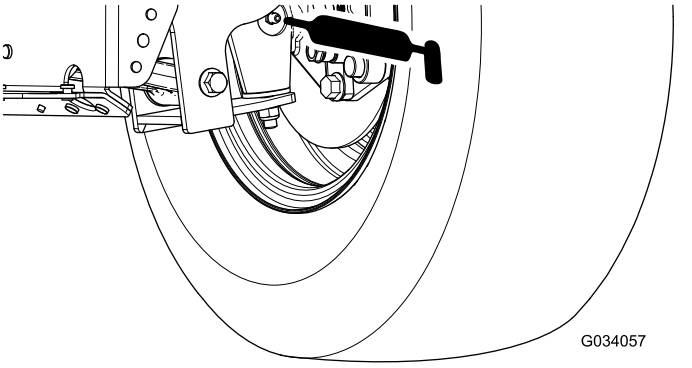

Figure 30

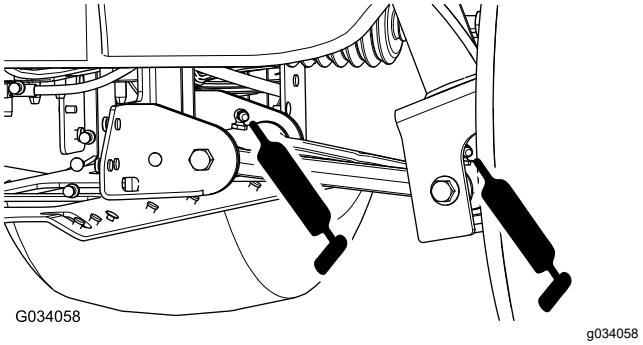

Figure 31

Greasing the Front Wheel Bearings

Service Interval: Every 300 hours

Grease specification: Mobilgrease XHP™-222

Removing the Hub and Rotor

1. Lift the front of the machine and support it with jack stands.
2. Remove the 4 lug nuts that secure the wheel to the hub (Figure 32).

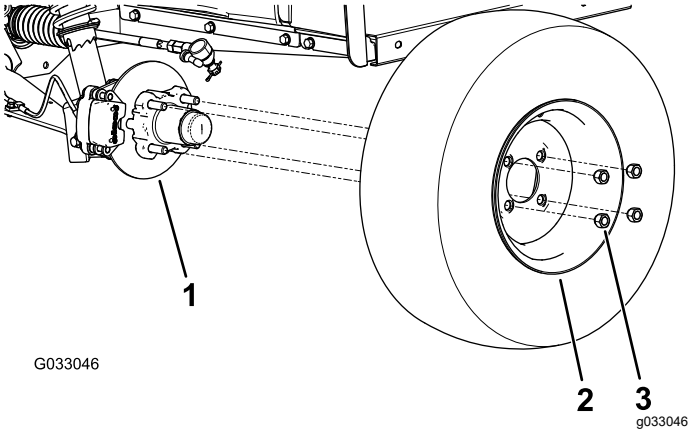

Figure 32

1. Hub
2. Wheel
3. Lug nut

3. Remove the flange-head bolts (3/8 x 3/4 inch) that secure the bracket for the brake assembly to the spindle and separate the brake from the spindle (Figure 33).

   Note: Support the brake assembly before proceeding to the next step.

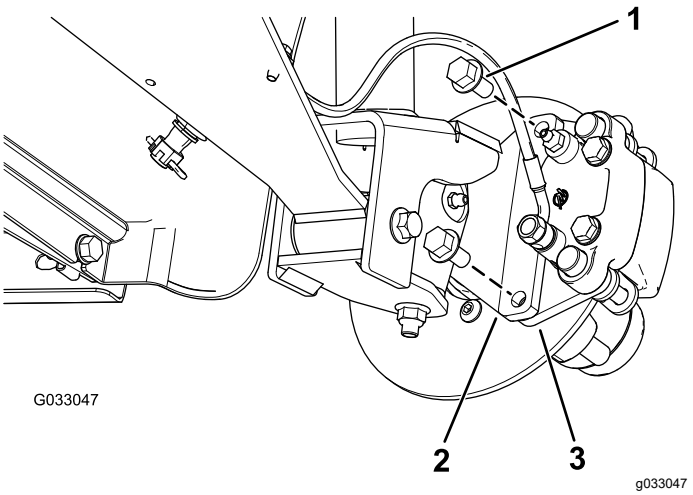

Figure 33

1. Flange-head bolts (3/8 x 3/4 inch)
2. Spindle
3. Caliper bracket (brake assembly)

4. Remove the dust cap from the hub (Figure 34).

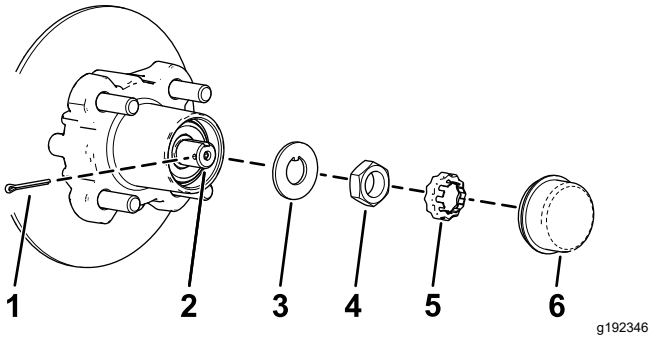

Figure 34

1. Cotter pin
2. Spindle
3. Tab washer
4. Spindle nut
5. Nut retainer
6. Dust cap

5. Remove the cotter pin and nut retainer from the spindle and spindle nut (Figure 34).
6. Remove the spindle nut from the spindle, and separate the hub and rotor assembly from the spindle (Figure 34 and Figure 35).

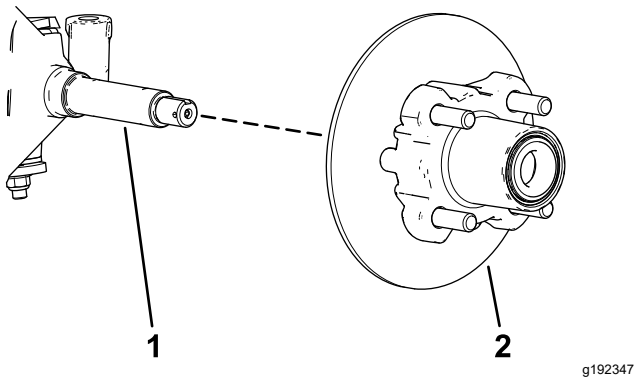

Figure 35

1. Spindle
2. Hub and rotor assembly

7. Wipe clean the spindle with a rag.
8. Repeat steps 1 through 7 to the hub and rotor at the other side of the machine.

Greasing the Wheel Bearings

1. Remove the outboard bearing and bearing race from the hub (Figure 36).

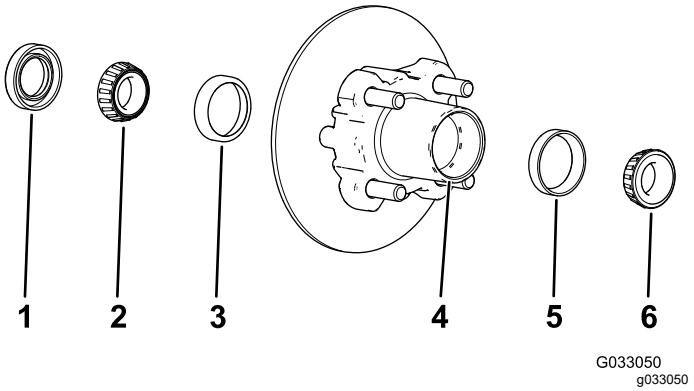

Figure 36

1. Seal
2. Inboard bearing
3. Inboard-bearing race
4. Bearing cavity (hub)
5. Outboard-bearing race
6. Outboard bearing

2. Remove the seal, inboard bearing from the hub (Figure 36).
3. Wipe clean the seal and check for wear and damage.

   Note: Do not use cleaning solvent to clean the seal. Replace the seal if it is worn or damaged.
4. Clean the bearings and races, and check these parts for wear and damage.

   Note: Replace all worn or damaged parts. Ensure that the bearings and races are clean and dry.
5. Clean the cavity of the hub of all grease, dirt, and debris (Figure 36).
6. Pack the bearings with the specified grease.
7. Fill the cavity of hub 50 to 80% full of the specified grease (Figure 36).
8. Assemble the inboard bearing onto the race at the inboard side of the hub and install the seal (Figure 36).
9. Repeat steps 1 through 8 to the bearings for the other hub.

Installing the Hub and Rotor

1. Apply a light coat of the specified grease to the spindle (Figure 37).

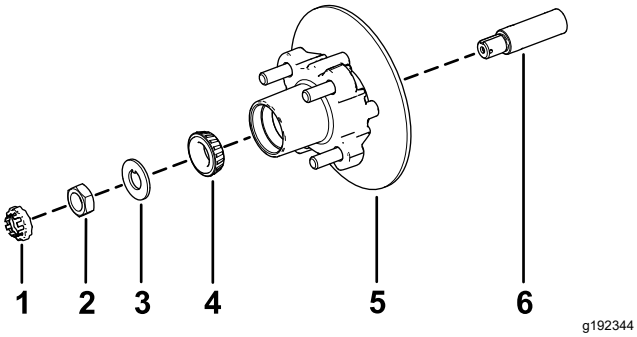

Figure 37

1. Nut retainer
2. Spindle nut
3. Tab washer
4. Outer bearing
5. Hub, rotor, inner bearing, race, and seal
6. Spindle

2. Assemble the hub and rotor onto the spindle with the rotor inboard (Figure 37).
3. Assemble the outboard bearing onto the spindle and seat the bearing to the outboard race (Figure 37).
4. Assemble the tab washer onto the spindle (Figure 37).
5. Thread the spindle nut onto the spindle and tighten the nut to 15 N·m (11 ft-lb), while rotating the hub to seat the bearing (Figure 37).
6. Loosen the spindle nut until the hub rotates freely.
7. Torque the spindle nut to 170 to 225 N·cm (15 to 20 in-lb).
8. Install the retainer over the nut and check the alignment of the slot in the retainer and the hole in the spindle for the cotter pin (Figure 38).

   Note: If the slot in the retainer and the hole in the spindle are not aligned, tighten the spindle nut to align the slot and hole to a maximum torque of 226 N·cm (20 in-lb) on the nut.

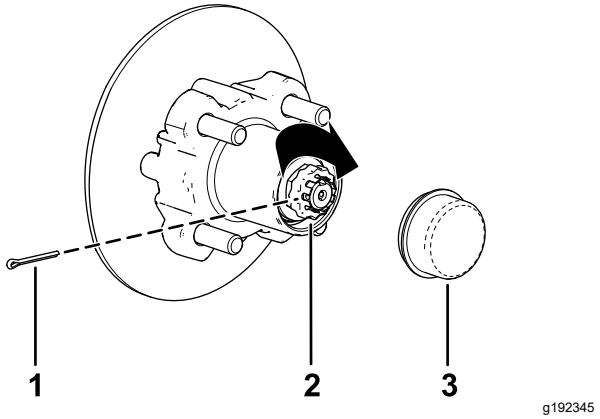

Figure 38

1. Cotter pin
2. Nut retainer
3. Dust cap

9. Install the cotter pin and bend each legs around the retainer (Figure 38).
10. Install the dust cap onto the hub (Figure 38).
11. Repeat steps 1 through 10 for the hub and rotor at the other side of the machine.

Installing the Brakes and Wheels

1. Clean the 2 flange-head bolts (3/8 x 3/4 inch) and apply a coat of medium-strength thread-locking compound to the threads of the bolts.
2. Align the brake pads to either side of the rotor (Figure 33) and the holes in the caliper bracket with the holes in the brake mount of the spindle frame (Figure 37).
3. Secure the caliper bracket to the spindle frame (Figure 33) using the 2 flange-head bolts (3/8 x 3/4 inch).

   Torque the 2 flange-head bolts to 47 to 54 N·m (35 to 40 ft-lb).
4. Align the holes in the wheel to the studs of the hub and assemble the wheel to the hub with the valve stem outward (Figure 32).

   Note: Ensure that the mounting surface of the wheel is flush with the hub.
5. Secure the wheel to the hub using the lug nuts (Figure 32).

   Torque the lug nuts to 108 to 122 N·m (80 to 90 ft-lb).
6. Repeat steps 1 through 5 for the brake and wheel on the other side of the machine.

Electrical System Maintenance

Electrical System Safety

WARNING

CALIFORNIA
Proposition 65 Warning

Battery posts, terminals, and related accessories contain lead and lead compounds, chemicals known to the State of California to cause cancer and reproductive harm. Wash hands after handling.

- Disconnect the battery before repairing the machine. Disconnect the negative terminal first and the positive last. Connect the positive terminal first and the negative last.
- Charge the battery in an open, well-ventilated area, away from sparks and flames. Unplug the charger before connecting or disconnecting the battery. Wear protective clothing and use insulated tools.

Battery Safety

- To reduce the potential for fire, keep the batteries and motor area free of excessive grease, grass, leaves, and accumulation of dirt.
- Remove all jewelry and watches before servicing the batteries.
- Do not charge the batteries while servicing the machine.
- Always disconnect all the battery cables before servicing any electrical components; refer to Disconnecting the Batteries (page 39).

  Note: Disconnecting all the battery cables isolates power from the electrical system.
- Battery electrolyte contains sulfuric acid, which produces hydrogen, a gas that is explosive in certain conditions. Sulfuric acid can burn skin and damage clothing; when emitted in gas form, it can damage your lungs.
  - Always service, store, and charge the machine in a well-ventilated area.
  - Keep sparks and open flames away from the batteries.
  - Do not smoke near the batteries.
  - Do not use an open flame to check the level or leakage of battery electrolyte.
  - Wear proper eye, hand, and face protection.
  - Do not lean over the batteries at any time.
  - Avoid breathing in battery fumes.
  - Fill the batteries where clean water is always available for flushing the skin.
  - If you get electrolyte on your skin or eyes, flush the affected area for 20 minutes with clean water. Remove affected clothing. Seek medical attention immediately.
  - Keep children and pets away from the batteries and electrolyte.
- Electrolyte is poisonous.
  - Do not drink the electrolyte.
  - If electrolyte has been swallowed, have them drink large quantities of water immediately to dilute the electrolyte, if possible.
  - Do not attempt to make them vomit.
  - Call a poison control center and get medical attention immediately.
- When not filling the batteries, keep the battery vent caps tight on the batteries. Do not operate the machine if any of the vent caps are missing or damaged.
- When removing or installing the batteries, do not allow the battery terminals to touch any metal parts of the machine.
- Do not allow metal tools to short between the battery terminals and metal parts of the machine.
- Do not check a battery charge by placing a metal object across the posts. This causes sparks, which can cause an explosion.
- Always keep the battery retainers in place to protect and secure the batteries.
- Read and understand the charging instructions before charging the batteries; refer to Charging the Batteries (page 36). Also, take the following precautions when charging the batteries:
  - Turn the machine key switch to OFF before connecting the charger to a power source.
  - Use only the battery charger supplied with the machine to charge the batteries.
  - Do not charge a damaged or frozen battery.
  - Always unplug the AC power cord from the power outlet before unplugging it from the machine charging receptacle to avoid sparks.
  - If a battery gets hot while charging, begins emitting large amounts of gasses, or spews

electrolyte, immediately disconnect the charger power cord from the power outlet. Have the machine serviced by an authorized Toro distributor before using it again.

Maintaining the Batteries

Raise the seat assembly and raise the cargo bed before maintaining the batteries; refer to Raising and Lowering the Seat Assembly (page 30) and Raising the Cargo Bed to the Dump Position (page 17).

⚠ WARNING

Battery terminals or metal tools could short against metal components causing sparks. Sparks can cause the battery gases to explode, resulting in personal injury.

- **When removing or installing the battery, do not allow the battery terminals to touch any metal parts of the machine.**
- **Do not allow metal tools to short between the battery terminals and metal parts of the machine.**
- **Use insulated tools when maintaining the batteries.**
- **Always keep the battery retainers in place to protect and secure the batteries.**

⚠ DANGER

Do not touch any electrical components or contacts on the motor.

Touching any of these components or contacts could seriously injure you or cause death.

Cleaning the Batteries

Service Interval: Every 25 hours

1. Ensure that all the battery caps are tight.
2. Use a paper towel to clean the batteries.
3. If the battery terminals are corroded, clean them with a solution of 4 parts water and 1 part baking soda. Also, clean the posts and cable clamps with a post and clamp cleaner.

   Note: The posts and clamps should have a bright, metallic shine.
4. Apply a light coating of Toro battery-terminal protector.

Charging the Batteries

Service Interval: Before each use or daily

The charger for this machine is located inside the machine under the operator's seat. For maximum battery life, charge the batteries whenever you are not using the machine. Depending on how discharged the batteries are and the ambient temperature of the batteries, it may take up to 16 hours to charge the batteries to full capacity.

Note: Normal charge time is approximately 8 to 10 hours.

Important: **Lead-acid batteries do not develop a charge memory and do not need to be fully discharged before charging them. *Fully discharging the batteries may damage them.* Charge the batteries any time the machine is not in use.**

⚠ WARNING

Charging the battery produces gases that can explode.

Never smoke near the batteries and keep sparks and flames away from them.

1. Position the machine in a well-ventilated area near a suitable power outlet.
2. Check the electrolyte level of the batteries.

   Note: After fully charging the batteries, fill the batteries with distilled or deionized water; refer to Adding Distilled or Deionized Water to the Batteries (page 38).

   Important: **Fully charge the batteries before adding the water to the batteries. While charging, the electrolyte increases in volume, and filling a low battery before fully charging the batteries can cause the electrolyte to overflow and leak out of the vent.**

3. Connect a **16 gauge (or larger diameter), 2.5 m (8.2 ft) or shorter charger cord** to the charging receptacle on the machine (Figure 39).

   Note: Ensure that the charger-voltage setting matches the voltage at the power outlet being used.

   Note: In high-ambient temperature environments, remove the seat assembly for optimal charging time; refer to Removing the Seat Assembly (page 31). If the battery charger is too hot, it may not charge properly. In cold temperatures, it may take a longer for the batteries to charge.

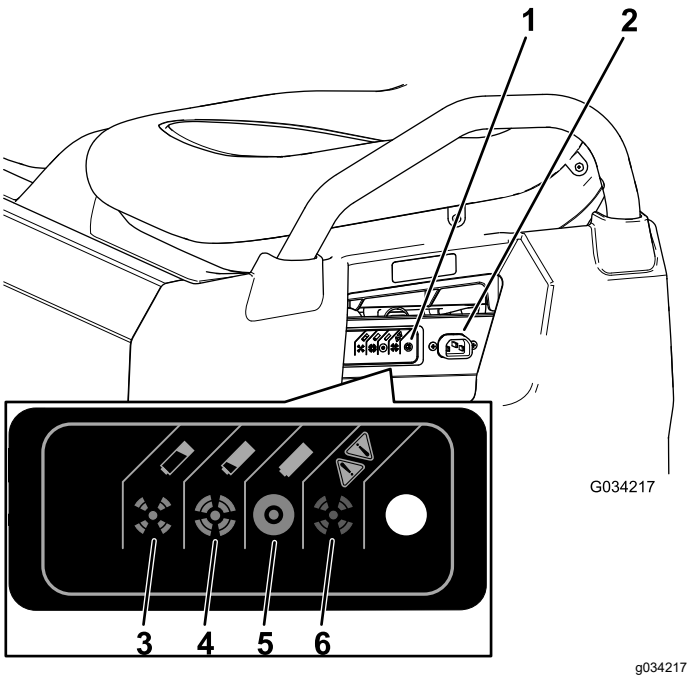

Figure 39

1. Charger-status light
2. Charging receptacle
3. The battery is near empty.
4. The battery is almost charged.
5. The battery is charged.
6. Charger fault; refer to the charger manual for the fault codes.

4. Plug the charger power cord into the power outlet.

   Note: While the batteries are charging, the green light on the charger blinks on and off. When the batteries are fully charged, the green light stops blinking and stays on.

5. Disconnect the cord from the power outlet.
6. Disconnect the charger from the machine.

Refer to the following table and Figure 39 for information on the meanings of the varying colors of the charger-status light.

Charger-Status Light Table

Charger-Status Light Color	Solid/Flashing	Meaning
Green	Solid	Charging complete
Green	Flashing	Short flash—less than 80% charge Long flash—greater than 80% charge
Amber	Flashing	Reduced-power mode—low AC voltage or high internal charger temperature; charge immediately
Red	Flashing	Charger error—reset the charger power If this error persists, refer to the blink codes in the charger manual

Checking the Water Level of the Batteries

Service Interval: Before each use or daily

1. Park the machine on a level surface, engage the parking brake, shut off the machine, remove the key, and raise cargo bed; Raising the Cargo Bed to the Dump Position (page 17).
2. Raise the seat assembly to access the batteries; refer to Raising and Lowering the Seat Assembly (page 30).
3. Check the eyelets on each of the batteries to see if they are either black or white (Figure 40).

   Note: Black eyelets indicate that the batteries are full of water. White eyelets indicate that water is needed for the batteries.

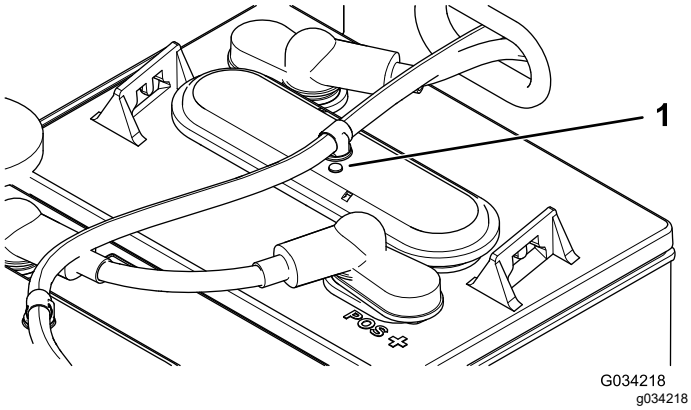

Figure 40

1. Battery eyelet

4. If the eyelets are white, you must add distilled or deionized water to the batteries; refer to Adding Distilled or Deionized Water to the Batteries (page 38).

Adding Distilled or Deionized Water to the Batteries

Service Interval: Every 25 hours/Every 2 weeks (whichever comes first)

Important: **Fully charge the batteries before adding the water to the batteries. While charging, the electrolyte increases in volume, and filling a low battery before fully charging the batteries can cause the electrolyte to overflow and leak out of the vent.**

Important: **Use only clean, distilled or deionized water to fill the batteries. Using tap water may damage and reduce the life of the batteries.**

1. Park the machine on a level surface, engage the parking brake, shut off the machine, remove the key, and raise cargo bed; Raising the Cargo Bed to the Dump Position (page 17).
2. Charge the batteries until a full charge is achieved; refer to Charging the Batteries (page 36).
3. Raise the seat assembly to access the batteries; refer to Raising and Lowering the Seat Assembly (page 30).
4. Connect your Toro water hand pump to the water-fill port (Figure 41).

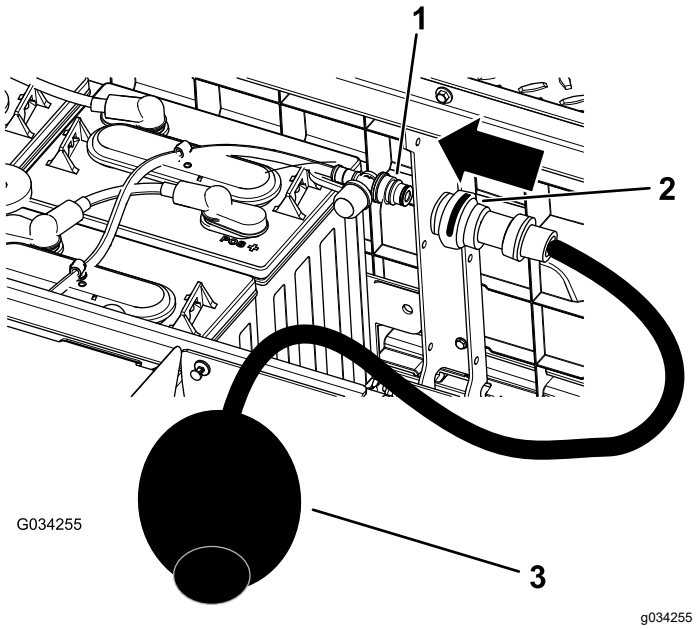

Figure 41

1. Water-fill port
2. Hand-pump connector
3. Water hand pump

5. Pump water into the water into batteries until all of the eyelets on top of the batteries are black, indicating that they are filled with water.

   Important: **Do not overfill the battery. Electrolyte will overflow onto other parts of the machine and severe corrosion and deterioration may result. Also, overfilling the battery may reduce the life of the battery.**

Changing the Batteries

When the machine begins to lose operating range or when the length of time to discharge or charge the battery is significantly reduced, the batteries are probably wearing and losing their ability to hold a charge. Take the machine to an Authorized Service Dealer and have them test the batteries to determine whether the batteries need to be replaced. The dealer can then replace the batteries for you. If you wish to replace the batteries yourself, use the following procedures:

Disconnecting the Batteries

1. Raise the cargo bed, turn the key switch to the OFF position, and remove the key.
2. Disconnect the main negative-battery cable (black) that connects the bank of batteries to the ground point of the machine (Figure 42).

   Note: The main battery cables are long when compared to battery-interconnect cables.

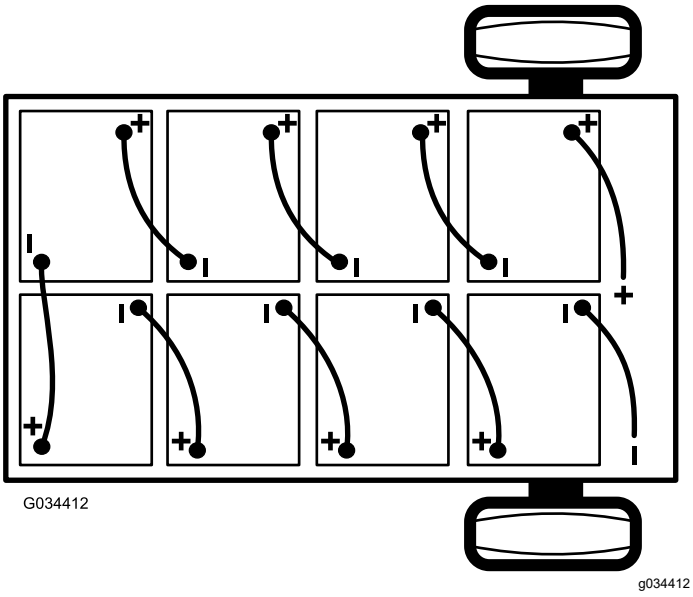

Figure 42

3. Disconnect the main positive-battery cable (red) that connects the bank of batteries to the main contactor of the machine (Figure 42).

Replacing the Batteries

1. Remove all of the battery-interconnect cables from the batteries.
2. Remove the battery retainers located between the batteries.
3. Remove all of the batteries and recycle them according to your local codes.
4. Assemble new batteries into the machine at the locations from where you removed batteries in step 3.

   Note: Pay attention to the battery polarity when installing the new batteries (Figure 42).
5. Install the battery retainers and tighten the nuts until the retainer securely grips the batteries.
6. Connect the batteries together as shown in Figure 42 with the battery-interconnect cables that you removed in step 1.

Connecting the Batteries

1. Ensure that the battery terminals are clean and free of oxidation.
2. Connect the main positive-battery cable (red) between the bank of batteries and the machine (Figure 42).
3. Connect the main negative-battery cable (black) between the bank of batteries and the machine (Figure 42).
4. Torque the nuts securing all of the battery cables until the retainer securely grips the battery.
5. Coat the battery terminals with Toro battery-terminal protector.
6. Ensure that the rubber boots on each battery cable are securely seated over the battery terminals.
7. Insert the key into the key switch and rotate the switch to the ON position.
8. Lower the cargo bed, rotate the key switch to the OFF position, and remove the key.

Storing the Batteries

Charge the batteries fully before placing the machine into storage. Plug the charger into a wall outlet while the machine and batteries are in storage. Leave the charger plugged into a wall outlet and charging receptacle during storage to ensure that the batteries stay charged and do not freeze; otherwise, charge the batteries at least once a month.

Important: **If the machine cannot be plugged in during storage, fully charge the batteries at least once a month. The batteries self-discharge over long periods of time, which may damage the batteries to the point of being unusable, even if the batteries are new.**

Replacing the Fuses

There is 1 fuse in the electrical system; the other slots are open for options. They are located under the seat assembly behind a battery on the right side of the machine (Figure 43).

Optional lift kit—open	15 A
Main power	10 A
Horn—optional (standard on International models only)	30 A

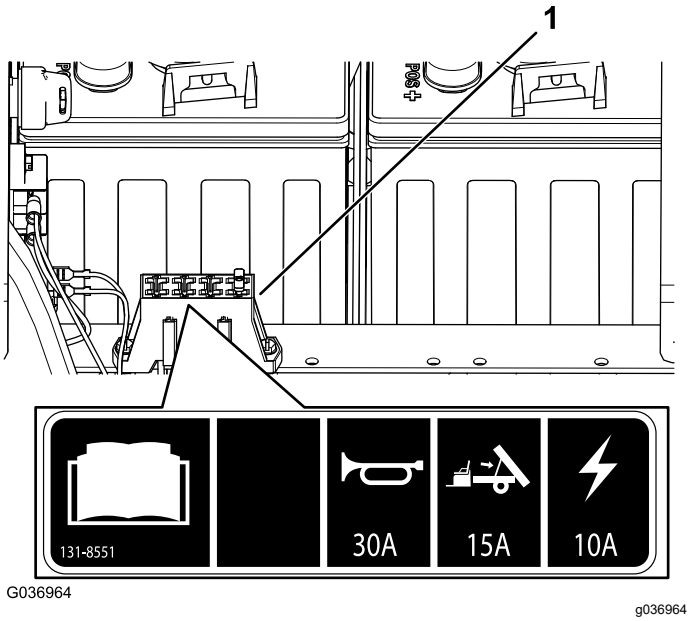

Figure 43

1. Fuse block

Maintaining the Headlights

Replacing the Bulbs

⚠ CAUTION

If you install a higher wattage bulb than the system is designed for, you may damage the 12 V power supply, or at a minimum, blow the fuse.

Always use the specified Toro LED bulb to prevent this issue.

⚠ CAUTION

The bulbs become extremely hot when in operation. Handling a hot bulb can cause severe burns and personal injury.

Always allow enough time for the bulbs to cool before replacing them. Use care whenever handling the bulb.

Specification: See your *Parts Catalog*.

1. Disconnect the batteries; refer to Disconnecting the Batteries (page 39).
2. Open the hood; refer to Raising the Hood (page 30).
3. Disconnect the electrical connector for the harness from the connector of the lamp assembly at the back of the headlight housing (Figure 44).

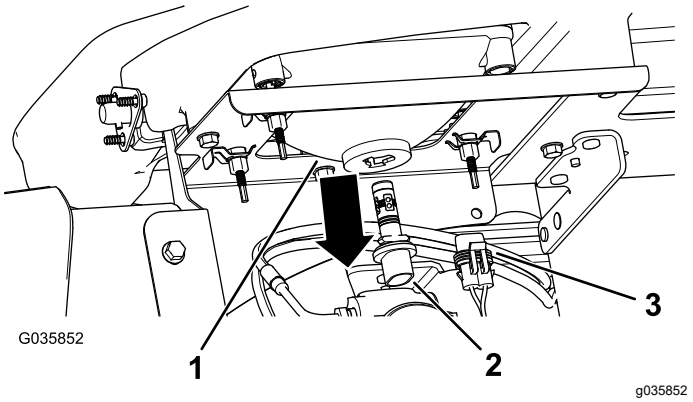

Figure 44

1. Headlight housing
2. Lamp assembly
3. Harness-electrical connector

4. Rotate the lamp assembly 1/4 turn counterclockwise and moving it rearward, out of the headlight housing (Figure 44).
5. Insert the new lamp assembly and headlight housing and align the tabs in the lamp assembly

with the slots in the headlight housing (Figure 44).

6. Secure lamp assembly by turning it 1/4 turn clockwise (Figure 44).
7. Connect the electrical connector for the harness to the connector of the new lamp assembly (Figure 44).
8. Connect the batteries and close the hood; refer to Closing the Hood (page 30).

Replacing the Headlight

1. Disconnect the batteries; refer to Disconnecting the Batteries (page 39).
2. Open the hood; refer to Raising the Hood (page 30).
3. Disconnect the electrical connector for the harness from the connector of the lamp assembly (Figure 45).

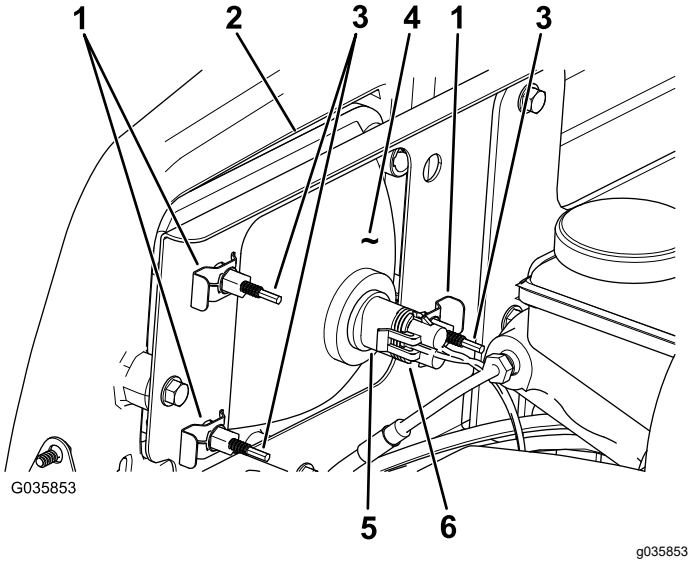

Figure 45

1. Speed clip
2. Opening in the bumper
3. Adjustment screw
4. Headlight
5. Lamp assembly
6. Harness-electrical connector

4. Remove the speed clips that secure the headlight to the headlight bracket (Figure 45).

   Note: Retain all parts for installation of the new headlight.
5. Remove the headlight assembly by moving it forward through the opening in the front bumper (Figure 45).
6. Install the new headlight through the opening in the bumper (Figure 45).

   Note: Ensure the adjustment posts are lined up with the holes in the mounting bracket behind the bumper.
7. Secure the headlight assembly with the speed clips that you removed in step 4.
8. Connect the electrical connector for the harness to the connector of the lamp assembly (Figure 45).
9. Adjust the headlights to direct the beams to the desired position, refer to Adjusting the Headlights (page 41).

Adjusting the Headlights

Use the following procedure to adjust the headlight beam position whenever a headlight assembly is replaced or removed.

1. Turn the key switch to the ON position, and turn on the headlights.
2. At the back of the headlight assembly, rotate adjustment screws (Figure 45) to pivot the headlight assembly and align the position of the cast beam.
3. Connect the battery and close the hood; refer to Closing the Hood (page 30).

Drive System Maintenance

Maintaining the Tires

Service Interval: Every 100 hours—Check the condition of the tires and rims.

Every 100 hours—Torque the wheel-lug nuts.

1. Inspect the tires an rims for signs of wear and damage.

   Note: Operating accidents, such as hitting curbs, can damage a tire or rim and also disrupt wheel alignment, so inspect tire condition after an accident.

2. Torque the wheel-lug nuts to 108 to 122 N·m (80 to 90 ft-lb).

Inspecting the Steering and Suspension Components

Service Interval: Every 100 hours—Inspect the steering and suspension for loose or damaged components.

With the steering wheel at the centered position (Figure 46), turn the steering wheel to the left or right. If you turn the steering wheel more than 13 mm (1/2 inch) to the left or right, and the tires do not turn, check the following steering and suspension components to ensure that they are not loose or damaged:

- Steering shaft to the steering-rack assembly joint

  Important: **Inspect the condition and security of the pinion-shaft seal (Figure 47).**

- Steering-rack assembly tie rods

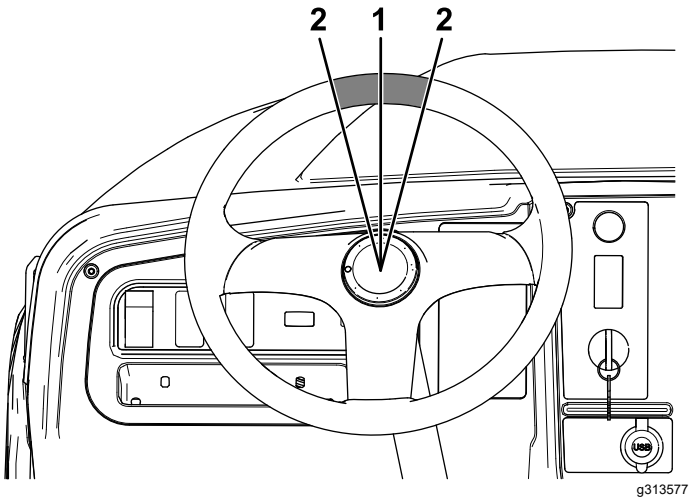

Figure 46

1. Steering wheel at the centered position
2. 13 mm (1/2 inch) from the center of the steering wheel

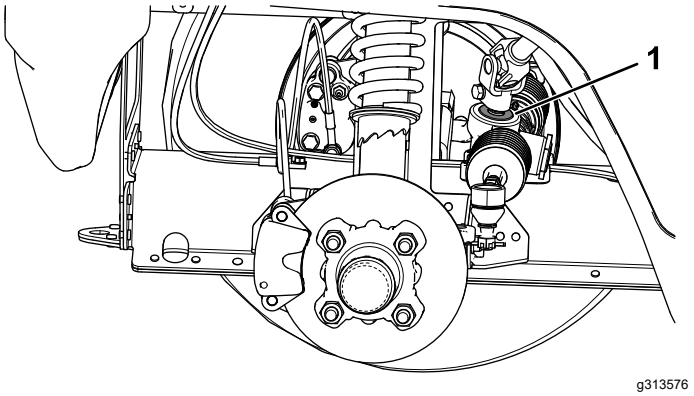

Figure 47

1. Pinion-shaft seal

Adjusting the Front Wheel Alignment

Service Interval: Every 100 hours/Yearly (whichever comes first)—Check the front wheel camber and toe-in.

Preparing to Adjust Camber or Toe-in

1. Check the tire pressure to ensure that the front tires are inflated to 82 kPa (12 psi).
2. Either add weight to the driver's seat equal to the average operator who will run the machine, or have an operator sit on the seat. The weight or operator must remain on the seat for the duration of the adjustment procedure.
3. On a level surface, roll the machine straight back 2 to 3 m (6 to 10 ft) and then straight forward to the original starting position. This allows the suspension to settle into the operating position.

Adjusting the Camber

Owner provided tools: spanner wrench, Toro Part No. 132-5069; refer to your authorized Toro distributor.

Important: **Make the camber adjustments only if you are using a front attachment or if there is uneven tire wear.**

1. Check the camber alignment at each wheel; the alignment should be as close to neutral (zero) as possible.

   Note: The tires should be aligned with the tread evenly on the ground to reduce uneven wear.

2. If the wheel camber is out of alignment, use the spanner wrench to rotate the collar on the shock absorber to align the wheel (Figure 48).

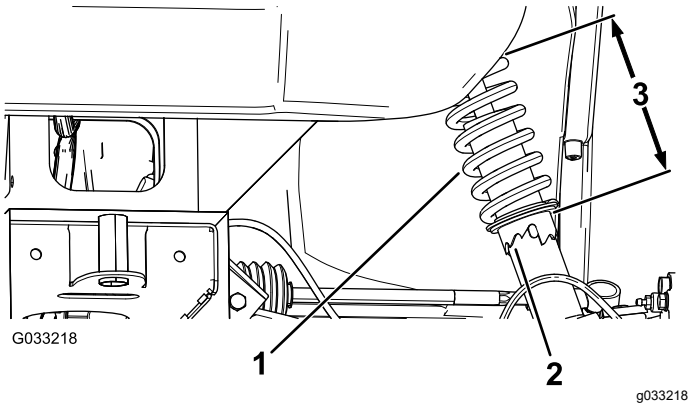

Figure 48

1. Shock-absorber spring
2. Collar
3. Spring length

Adjusting the Front Wheel Toe-in

Important: **Before adjusting toe-in, ensure that the camber adjustment is as close to neutral as possible; refer to Adjusting the Camber (page 43).**

1. Measure the distance between both of the front tires at the axle height at both the front and rear of the front tires (Figure 49).

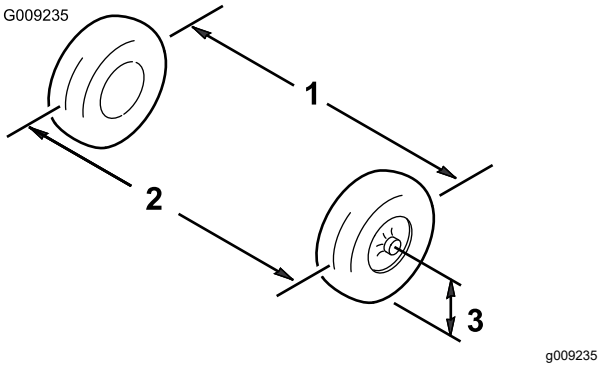

Figure 49

1. Tire center line—back
2. Tire center line—front
3. Axle center line

2. If the measurement does not fall within 0 to 6 mm (0 to 1/4 inch), loosen the jam nuts at the outer end of the tie rods (Figure 50).

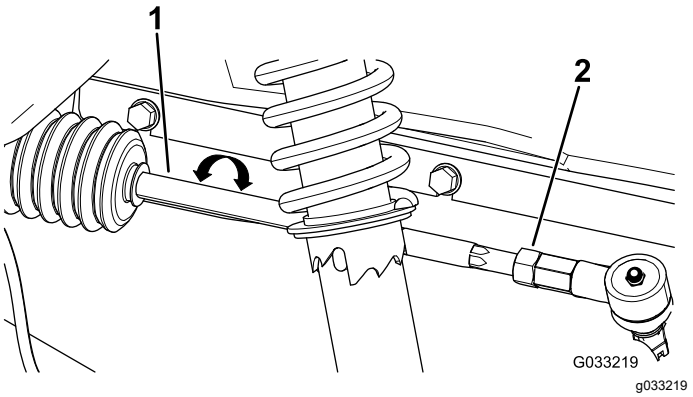

Figure 50

1. Tie rod
2. Jam nut

3. Rotate both tie rods to move the front of the tire inward or outward.
4. Tighten the tie rod jam nuts when the adjustment is correct.
5. Ensure that there is full travel of the steering wheel in both directions.

Checking the Transaxle-Fluid Level

Service Interval: Every 100 hours—Check the transaxle-fluid level.

1. Park the machine on a level surface.
2. Engage the parking brake.
3. Shut off the motor and remove the key.
4. Remove the fill plug on the transaxle (Figure 51).

   Note: The fluid level should be even with the bottom of the fill plug.

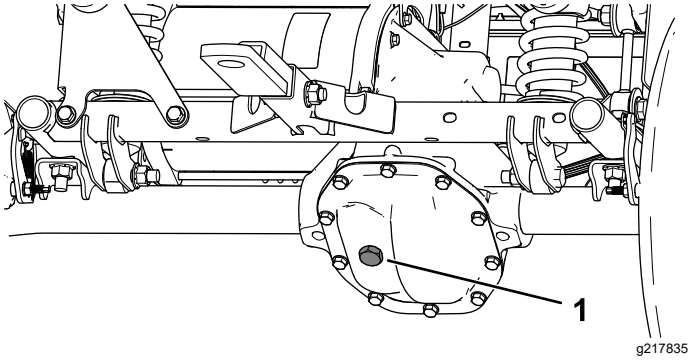

Figure 51

1. Fill plug

5. If the fluid level is low, remove the fill plug and add the specified fluid until it runs out of the hole (Figure 51).
6. Install the fill plug and torque it to 20 to 27 N·m (15 to 20 ft-lb).

Changing the Transaxle Fluid

Service Interval: Every 100 hours—Check the transaxle for leaks.

Every 800 hours/Yearly (whichever comes first)—Change the transaxle fluid.

Fluid Type: SAE 10W-30 (API service SJ or higher)

Fluid Capacity: 0.66 L (0.7 US qt)

1. Align a drain pan under the transaxle cover (Figure 52).

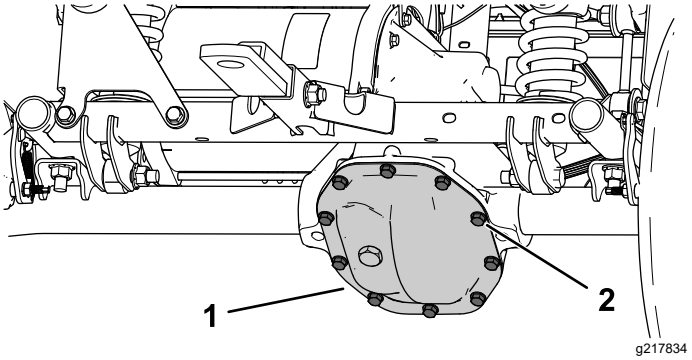

Figure 52

1. Transaxle cover
2. Bolts

2. Remove the bolts from the transaxle cover and drain the fluid completely (Figure 52).

   Note: Retain the transaxle cover and bolt.
3. Install the transaxle cover using the previously removed bolts, and torque the bolts to 22 to 32 N·m (16 to 24 ft-lb).
4. Remove the fill plug on the transaxle and fill the transaxle with the specified fluid until it runs out of the fill hole (Figure 51).
5. Install the fill plug and torque it to 20 to 27 N·m (15 to 20 ft-lb).

Brake Maintenance

Checking the Parking Brake

1. Engage the parking brake by pulling the parking-brake lever toward you, until you feel tension.
2. If you do not feel tension when pulling the parking-brake toward you within 11.4 to 16.5 cm (4-1/2 to 6-1/2 inches) from the “P” symbol on the dash, then you need to adjust the parking brake; refer to Adjusting the Parking Brake (page 45).

Adjusting the Parking Brake

1. Ensure that the parking brake is disengaged.
2. Using jack stands, lift the rear of the machine; refer to Lifting the Machine (page 29).
3. Using 2 wrenches, hold the adjusting post on the caliper in place with 1 wrench, and loosen the jam nut 1/4 turn with the other wrench (Figure 53).

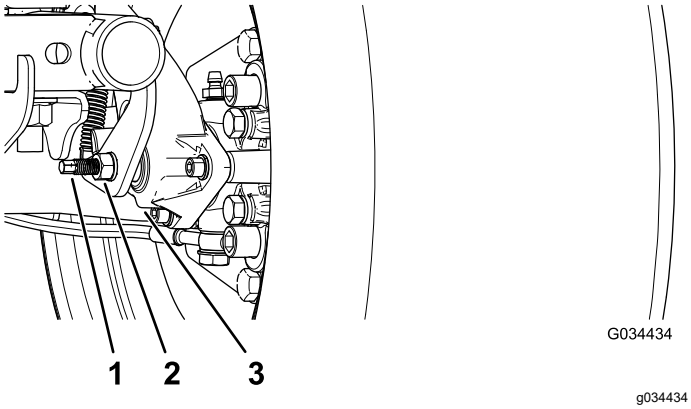

Figure 53

1. Adjusting post
2. Jam nut
3. Caliper

4. While holding the adjusting post and the jam nut in place, turn the adjusting post in to tighten (Figure 53).

   Note: Perform this step until you feel drag on the wheel.
5. While holding the adjusting post and the jam nut in place, back off 1/4 turn (Figure 53).
6. While holding the adjusting post and the jam nut in place, tighten the jam nut (Figure 53).
7. Perform steps 1 through 6 to the other side.
8. Verify that the parking brake is adjusted to the proper tension; refer to Checking the Parking Brake (page 45).

   Note: If you cannot adjust the parking brake to the required tension, the brake pads may be worn and need to be replace. Contact your Authorized Toro Service Dealer for assistance.

Checking the Brake-Fluid Level

Service Interval: Before each use or daily Check the brake-fluid level before the motor is first used.

Brake Fluid Type: DOT 3

1. Park the machine on a level surface, engage the parking brake, shut off the machine, and remove the key.
2. Raise the hood to gain access to the master-brake cylinder and reservoir (Figure 54).

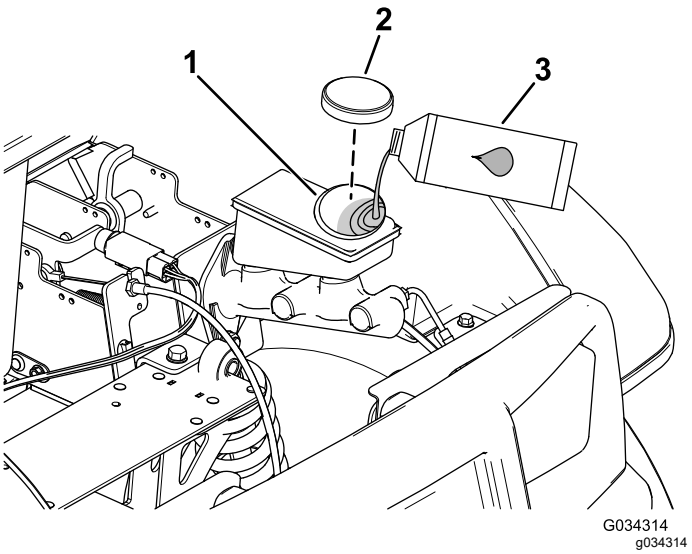

Figure 54

1. Filler neck (reservoir)
2. Reservoir cap
3. DOT 3 brake fluid

3. Look at the outline of the fluid level at the side of the reservoir (Figure 55).

   Note: The level should be above the Minimum line.

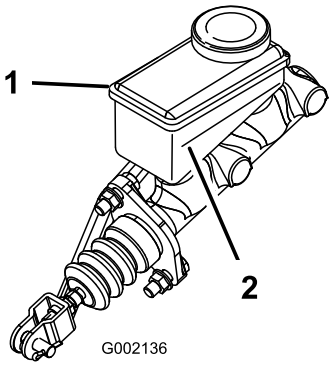

g002136

Figure 55

1. Brake-fluid reservoir
2. Minimum line

4. If the fluid level is low, perform the following:
   A. Clean the area around the reservoir cap and remove the cap (Figure 54).
   B. Add DOT 3 brake fluid to the reservoir until the fluid level is above the Minimum line (Figure 55).

      Note: Do not overfill the reservoir with brake fluid.

   C. Install the reservoir cap (Figure 54).
5. Close the hood of the machine.

Inspecting the Brakes

Service Interval: Every 100 hours

Brakes are a critical safety component of the machine. As with all safety components, they should be closely inspected at regular intervals to ensure optimum performance and safety.

- Inspect the brake shoes for wear or damage. If the lining (brake pad) thickness is less than 1.6 mm (1/16 inch), the brake shoes should be replaced.
- Inspect the backing plate and other components for signs of excessive wear or deformation. If any deformation is found, the appropriate components must be replaced.
- Check the brake-fluid level; refer to Checking the Brake-Fluid Level (page 45).

Replacing the Service and Parking-Brake Pads

Service Interval: Every 400 hours

Contact your authorized Authorized Toro Service Dealer to inspect and possibly replace the service and parking-brake pads.

Changing the Brake Fluid

Service Interval: Every 1,000 hours

Contact your authorized Authorized Toro Service Dealer.

Chassis Maintenance

Adjusting the Cargo-Bed Latches

If the cargo-bed latch is out of adjustment, the cargo bed vibrates up and down as you drive the machine. You can adjust the latch posts to make the latches hold the cargo bed snugly to the chassis.

1. Verify that the cargo bed is latching.

   Note: If the cargo bed does not latch, the bed-latch striker is likely too low. If the cargo bed latches, but vibrates up and down as you drive, the bed-latch striker is likely too high.

2. Raise the cargo bed; Raising the Cargo Bed to the Dump Position (page 17).
3. Loosen the 2 bolts on the bed-latch striker and move the striker up or down, depending on if the striker is too high or too low (Figure 56).

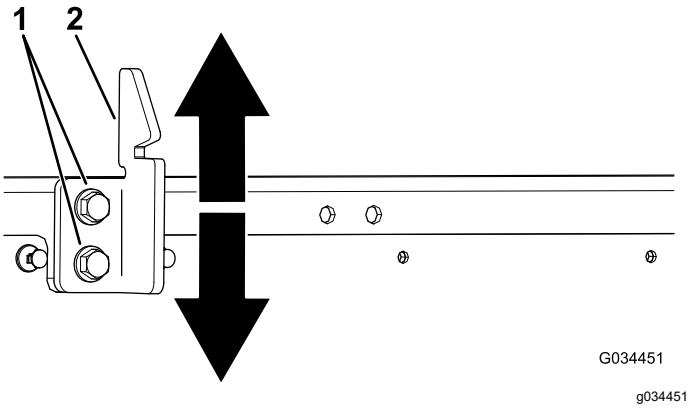

Figure 56

1. Bolts
2. Bed-latch striker

4. Tighten the 2 bolts on the bed-latch striker (Figure 56).
5. Verify that the adjustment is correct by latching the cargo bed several times.

Cleaning

Washing the Machine

Wash the machine as needed. Use water alone or with a mild detergent. You may use a rag when washing the machine; however, the hood will lose some of its luster.

Important: **Pressurized water is not recommended when washing the machine. It may damage the electrical system, loosen important decals, or wash away necessary grease at friction points. Avoid excessive use of water, especially near the control panel, motor, motor controller, charger, back of the dashboard, and batteries.**

Storage

1. Park the machine on a level surface, engage the parking brake, shut off the machine, and remove the key.
2. Clean dirt and grime from the entire machine, including the outside of the motor housing.

   Important: **You can wash the machine with mild detergent and water. Do not use high pressure water to wash the machine. Pressure washing may damage the electrical system or wash away necessary grease at friction points. Avoid excessive use of water, especially near the control panel, lights, motor, and the battery.**
3. Inspect the brakes; refer to Inspecting the Brakes (page 46).
4. Grease the machine; refer to Greasing the Machine (page 31).
5. Check the tire pressure; refer to Checking the Tire Pressure (page 20).
6. Check and tighten all bolts, nuts, and screws. Repair or replace any part that is damaged.
7. Paint all scratched or bare metal surfaces.

   Note: Paint is available from your Authorized Service Dealer.
8. Store the machine in a clean, dry garage or storage area.
9. Remove the key and put it in a safe place out of the reach of children.
10. Cover the machine to protect it and keep it clean.

Battery Storage

1. Charge the batteries fully before placing the machine into storage; refer to Charging the Batteries (page 36). Plug the charger into a wall outlet while the machine and batteries are in storage. Leave the charger plugged into a wall outlet and charging receptacle during storage to ensure that the batteries stay charged and do not freeze; otherwise, charge the batteries monthly at a minimum.
2. Plug in the charger during storage to maintain full battery life.

   Important: **If the machine cannot be plugged in during storage, fully charge the batteries at least once a month. The batteries self-discharge over long periods of time, which may damage the batteries to the point of being unusable, even if the batteries are new.**
3. After fully charging the batteries, fill the batteries with distilled or deionized water before storing; refer to Adding Distilled or Deionized Water to the Batteries (page 38).

Troubleshooting

Machine-Status Light Flash Pattern

Problem	Possible Cause	Corrective Action
The machine-status light is always illuminated.	1. The system is functioning properly.	1. None
The machine-status light flashed 1 time.	1. There is a controller-configuration fault.	1. Contact your Authorized Toro Service Dealer.
The machine-status light flashed 2 times.	1. The parking brake is engaged while in FORWARD or REVERSE position. 2. A drive-switch fault occurred.	1. Disengage the parking brake. 2. Turn off the machine and check the functionality of the switches.
The machine-status light flashed 3 times.	1. The motor current exceeded the controller-rated maximum. 2. There is an internal-power component fault.	1. Turn the key switch to the OFF position, wait a few seconds, and turn the key switch to the ON position. Check all batteries and high-current controller connections If the condition continues, refer to your Authorized Service Dealer. 2. Contact your Authorized Toro Service Dealer.
The machine-status light flashed 4 times.	1. A main-contactor fault occurred.	1. Test the contact wires, coil and contacts for normal operation.
The machine-status light flashed 5 times.	1. Exceeded the maximum motor speed.	1. Turn the key switch to the OFF position, wait a few seconds, turn the key switch to the ON position, and check for normal operation.
The machine-status light flashed 6 times.	1. The throttle is pressed while starting the machine. 2. There is a wire that is not making a connection.	1. Release the pedal, turn the key switch to the OFF position, wait a few seconds, turn the key switch to the ON position, and check for normal operation. 2. Test the wiring between the controller and contactor, switches, and the status-indicator light.
The machine-status light flashed 7 times.	1. The remaining charge on the batteries is low. 2. The batteries are fully discharged. 3. The internal capacitor has a pre-charge of less than 5V.	1. Stop operation, drive slowly to your nearest charging station, and charge the batteries fully. 2. Tow the machine to your charging station and charge the batteries fully. 3. Fully charge the batteries, turn the key switch to the OFF position, wait a few seconds, turn the key switch to the ON position, and check for normal operation.
The machine-status light flashed 8 times.	1. The controller or motor is overheated or too cold.	1. Determine if the motor or controller is very hot or very cold, then allow the machine to return to safe temperatures before resuming normal operation.
The machine-status light flashed 10 times.	1. A controller-configuration fault occurred.	1. Contact your Authorized Toro Service Dealer.

Problem	Possible Cause	Corrective Action
The machine-status light flashed 11 times.	1. A motor-encoder fault occurred. 2. Exceeded the maximum motor speed.	1. Check the motor-encoder (speed sensor) wiring. 2. Turn the key switch to the OFF position, wait a few seconds, turn the key switch to the ON position, and check for normal operation.
The machine-status light flashed 12 times.	1. A controller-configuration fault occurred.	1. Contact your Authorized Toro Service Dealer.
The machine-status light flashed 13 times.	1. An internal-software fault occurred.	1. Contact your Authorized Toro Service Dealer.
The machine-status light flashed 14 times.	1. A communication fault occurred.	1. Contact your Authorized Toro Service Dealer.
The machine-status light is not illuminated.	1. There is either no power to the controller or the controller has failed.	1. Contact your Authorized Toro Service Dealer.

European Privacy Notice

The Information Toro Collects
Toro Warranty Company (Toro) respects your privacy. In order to process your warranty claim and contact you in the event of a product recall, we ask you to share certain personal information with us, either directly or through your local Toro company or dealer.

The Toro warranty system is hosted on servers located within the United States where privacy law may not provide the same protection as applies in your country.

BY SHARING YOUR PERSONAL INFORMATION WITH US, YOU ARE CONSENTING TO THE PROCESSING OF YOUR PERSONAL INFORMATION AS DESCRIBED IN THIS PRIVACY NOTICE.

The Way Toro Uses Information
Toro may use your personal information to process warranty claims, to contact you in the event of a product recall and for any other purpose which we tell you about. Toro may share your information with Toro's affiliates, dealers or other business partners in connection with any of these activities. We will not sell your personal information to any other company. We reserve the right to disclose personal information in order to comply with applicable laws and with requests by the appropriate authorities, to operate our systems properly or for our own protection or that of other users.

Retention of your Personal Information
We will keep your personal information as long as we need it for the purposes for which it was originally collected or for other legitimate purposes (such as regulatory compliance), or as required by applicable law.

Toro's Commitment to Security of Your Personal Information
We take reasonable precautions in order to protect the security of your personal information. We also take steps to maintain the accuracy and current status of personal information.

Access and Correction of your Personal Information
If you would like to review or correct your personal information, please contact us by email at legal@toro.com.

Australian Consumer Law

Australian customers will find details relating to the Australian Consumer Law either inside the box or at your local Toro Dealer.

The Toro Warranty

A Limited Warranty

Electric
Workman

Conditions and Products Covered

The Toro Company and its affiliate, Toro Warranty Company, pursuant to an agreement between them, jointly warrant your Toro Commercial product ("Product") to be free from defects in materials or workmanship for two years or 1500 operational hours*, whichever occurs first. Where a warrantable condition exists, we will repair the Product at no cost to you including diagnostics, labor, parts, and transportation. This warranty begins on the date the Product is delivered to the original retail purchaser.
* Product equipped with an hour meter.

Instructions for Obtaining Warranty Service

You are responsible for notifying the Commercial Products Distributor or Authorized Commercial Products Dealer from whom you purchased the Product as soon as you believe a warrantable condition exists. If you need help locating a Commercial Products Distributor or Authorized Dealer, or if you have questions regarding your warranty rights or responsibilities, you may contact us at:

Commercial Products Service Department
Toro Warranty Company
8111 Lyndale Avenue South
Bloomington, MN 55420-1196
E-mail: commercial.warranty@toro.com

Owner Responsibilities

As the Product owner, you are responsible for required maintenance and adjustments stated in your *Operator's Manual*. Failure to perform required maintenance and adjustments can be grounds for disallowing a warranty claim.

Items and Conditions Not Covered

Not all product failures or malfunctions that occur during the warranty period are defects in materials or workmanship. This warranty does not cover the following:

- Product failures which result from the use of non-Toro replacement parts, or from installation and use of add-on, or modified non-Toro branded accessories and products. A separate warranty may be provided by the manufacturer of these items.
- Product failures which result from failure to perform recommended maintenance and/or adjustments. Failure to properly maintain your Toro product per the Recommended Maintenance listed in the *Operator's Manual* can result in claims for warranty being denied.
- Product failures which result from operating the Product in an abusive, negligent or reckless manner.
- Parts subject to consumption through use unless found to be defective. Examples of parts which are consumed, or used up, during normal Product operation include, but are not limited to, batteries, carbon brushes, brake components, tires, filters, belts, etc.
- Failures caused by outside influence. Items considered to be outside influence include, but are not limited to, weather, storage practices, contamination, use of unapproved lubricants, additives, chemicals, etc.
- Normal "wear and tear" items. Normal "wear and tear" includes, but is not limited to, damage to seats due to wear or abrasion, worn painted surfaces, scratched decals or windows, etc.

Parts

Parts scheduled for replacement as required maintenance are warranted for the period of time up to the scheduled replacement time for that part. Parts replaced under this warranty are covered for the duration of the original product warranty and become the property of Toro. Toro will make the final decision whether to repair any existing part or assembly or replace it. Toro may use remanufactured parts for warranty repairs.

Note Regarding Deep Cycle Battery Warranty:

Deep cycle batteries have a specified total number of kilowatt-hours they can deliver during their lifetime. Operating, recharging, and maintenance techniques can extend or reduce total battery life. As the batteries in this product are consumed, the amount of useful work between charging intervals will slowly decrease until the battery is completely worn out. Replacement of worn out batteries, due to normal consumption, is the responsibility of the product owner. Battery replacement may be required during the normal product warranty period at owner's expense.

General Conditions

Repair by an Authorized Toro Distributor or Dealer is your sole remedy under this warranty.

Neither The Toro Company nor Toro Warranty Company is liable for indirect, incidental or consequential damages in connection with the use of the Toro Products covered by this warranty, including any cost or expense of providing substitute equipment or service during reasonable periods of malfunction or non-use pending completion of repairs under this warranty.

All implied warranties of merchantability and fitness for use are limited to the duration of this express warranty. Some states do not allow exclusions of incidental or consequential damages, or limitations on how long an implied warranty lasts, so the above exclusions and limitations may not apply to you.

This warranty gives you specific legal rights, and you may also have other rights which vary from state to state.

Countries Other than the United States or Canada

Customers who have purchased Toro products exported from the United States or Canada should contact their Toro Distributor (Dealer) to obtain guarantee policies for your country, province, or state. If for any reason you are dissatisfied with your Distributor's service or have difficulty obtaining guarantee information, contact the Toro importer. If all other remedies fail, you may contact us at Toro Warranty Company.