FORM NO. 01-505-0530.4

TORO

MODEL NO. 44850 - 20101 & UP
MODEL NO. 44860 - 20101 & UP

PARTS CATALOG

AEROATOR 686 / AERATOR 687

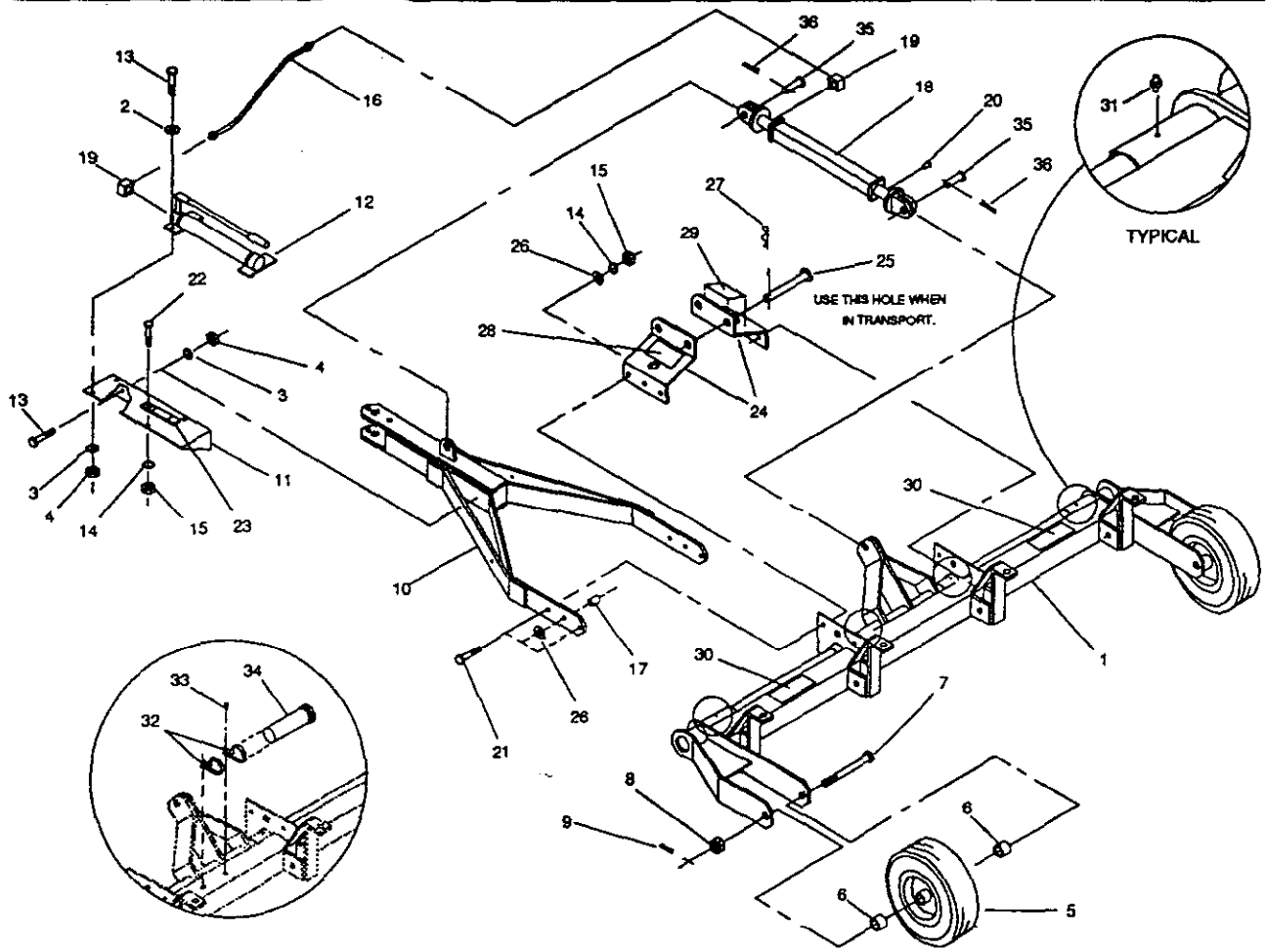

AERATOR 686 - MODEL NO. 44850
FRAME & HITCH ASSEMBLY

686-001

Ref. No.	Part No.	Description	No. Used
1	68-605-3053	Main Frame	1
2	3256-4	Flat Washer	2
3	3253-5	Lock Washer	4
4	3217-7	Hex Nut	4
5	01-269-0230	Tire & Wheel	2
6	68-604-3321	Wheel Spacer	4
7	68-605-3091	Axle Shaft	2
8	01-190-1614	Castle Nut	2
9	3272-23	Cotter Pin	2
10	68-605-3102	Tongue Assembly	1
11	68-605-3081	Pump Mount	1
12	01-305-0040	Hand Pump	1
*	01-305-0420	Seal Kit	1
13	323-7	Capscrew - Hex Hd.	4
14	3253-7	Lock Washer	7
15	3217-9	Hex Nut	7

Ref. No.	Part No.	Description	No. Used
16	01-312-0500	Hose Assembly	1
17	68-604-3501	Hitch Spacer	2
18	01-301-0050	Cylinder	1
*	01-301-0100	Seal Kit	1
19	01-201-0190	Hydraulic Fitting	2
20	01-201-0330	Hydraulic Fitting	1
21	325-10	Capscrew - Hex Hd.	6
22	325-5	Capscrew - Hex Hd.	1
23	68-604-3511	Vibration Strap	1
24	68-604-3532	Transport Lock Plate	2
25	01-252-0060	Hitch Pin	1
26	3256-6	Flat Washer	8
27	01-159-0060	Presto Pin	1
28	01-506-0470	Decal - Toro	1
29	01-506-0340	Decal - Danger	1
30	01-506-0680	Decal - Aerator 686	2

* Not Illustrated

© The TORO Company - 1994
All Rights Reserved

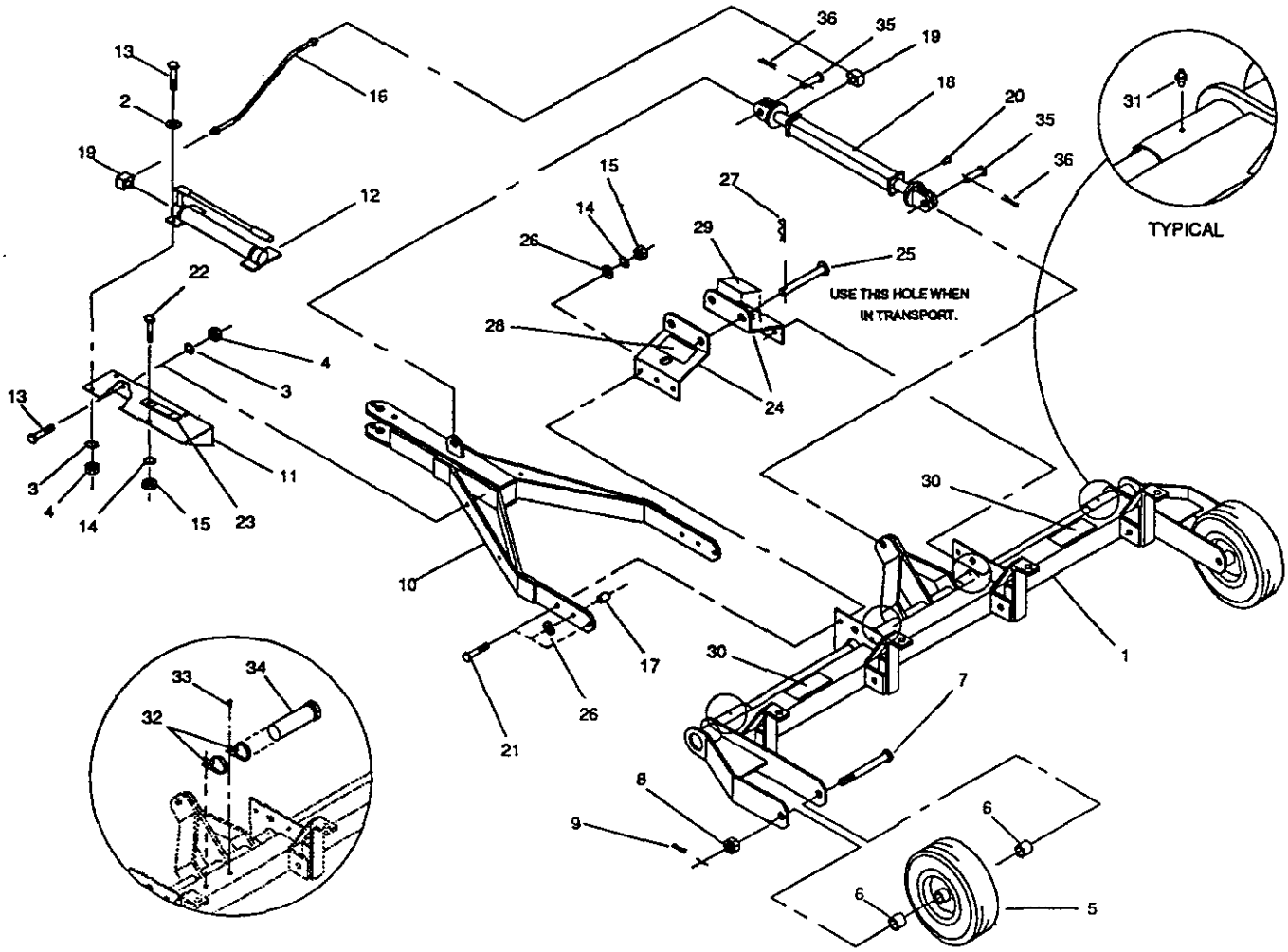

AERATOR 686 - MODEL NO. 44850
FRAME & HITCH ASSEMBLY (Continued)

686-001

Ref. No.	Part No.	Description	No. Used
31	01-215-0050	Grease Fitting	4
32	2412-133	R-Clamp	2
33	01-161-0020	Pop Rivet	2

Ref. No.	Part No.	Description	No. Used
34	74-0720	Manual Tube	1
35	01-252-0150	Clevis Pin	2
36	01-159-0010	Presto Pin	2

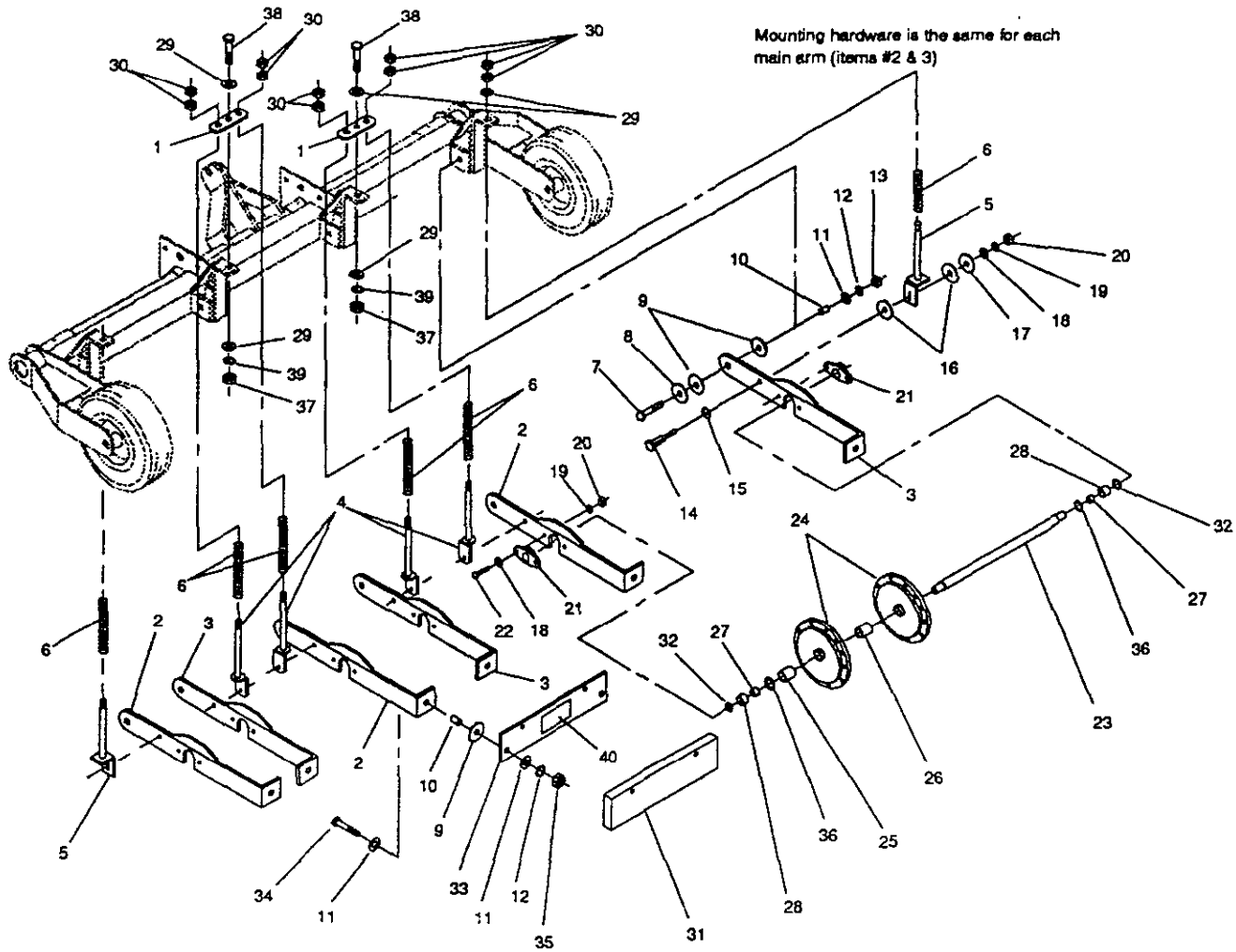

AERATOR 686 - MODEL 44850
MAIN ARM ASSEMBLY

686-002

Ref. No.	Part No.	Description	No. Used
1	68-604-3571	Spring Mount	2
2	68-605-3111	Main Arm-L.H.	3
3	68-605-3121	Main Arm-R.H.	3
4	68-605-3141	Spring Bracket	4
5	68-605-3071	Spring Slide Bracket, outer	2
6	01-261-0190	Spring	6
7	327-6	Capscrew - Hex Hd.	6
8	68-604-3481	Large Washer	6
9	68-604-3151	Pivot Washer	18
10	01-125-0050	Bushing	12
11	3256-7	Flat Washer	18
12	3253-8	Lock Washer	12
13	3218-6	Jam Nut	6
14	01-158-0310	Shoulder Bolt	6
15	3256-6	Flat Washer	6
16	13-404-0221	Pivot Washer	12
17	68-604-3491	Small Washer	6
18	3256-4	Flat Washer	18
19	3253-5	Lock Washer	18
20	3217-7	Hex Nut	18
21	01-100-0160	Bearing	6

Ref. No.	Part No.	Description	No. Used
22	323-8	Capscrew - Hex Hd.	12
23	68-604-3181	Aerator Shaft	3
24	44-004-0262	Casting	12
25	01-126-0030	Bushing	12
26	68-604-3421	Center Spacer	9
27	68-604-3451	Inside Spacer	6
28	68-604-3431	End Spacer	6
29	01-166-1200	Flat Washer	6
30	3218-7	Jam Nut	12
31	68-604-3291	Weight (optional)	3
32	01-168-1614	Machinery Bushing	6
33	68-604-3171	Main Arm End	3
34	327-7	Capscrew - Hex Hd.	6
35	3217-11	Hex Nut	6
36	01-168-2010	Machinery Bushing	6(var)
37	3217-12	Hex Nut	2
38	328-2	Capscrew - Hex Hd.	2
39	3253-9	Lock Washer	2
40	01-506-0470	Decal - Toro	1
*	01-506-0550	Decal - Grease	12

* Not Illustrated

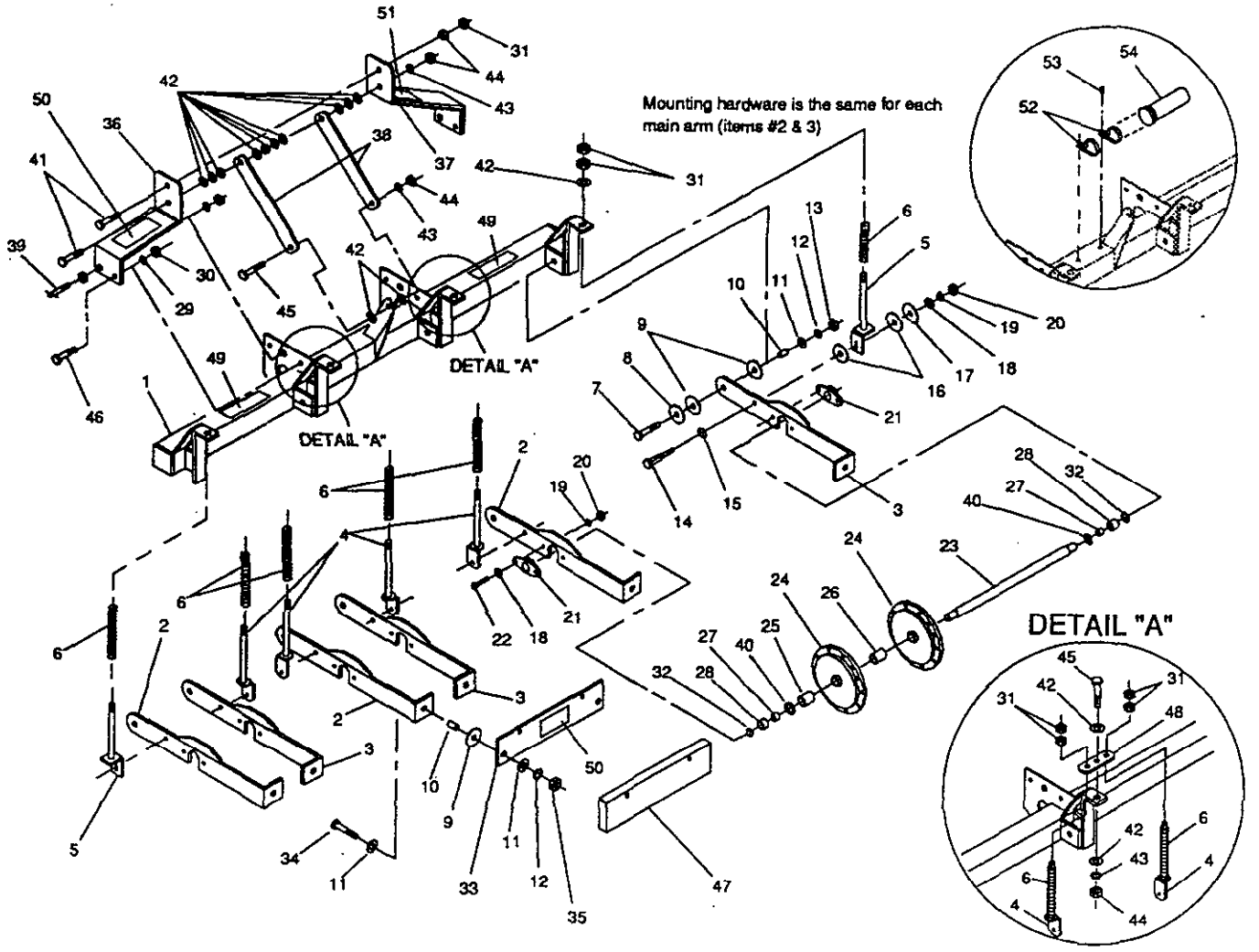

AERATOR 687 - MODEL NO. 44860

687-001

Ref. No.	Part No.	Description	No. Used
1	68-705-4053	Main Frame	1
2	68-605-3111	Main Arm-L.H.	3
3	68-605-3121	Main Arm-R.H.	3
4	68-605-3141	Spring Bracket	4
5	68-605-3071	Spring Slide Bracket, outer	2
6	01-261-0190	Spring	6
7	327-6	Capscrew - Hex Hd.	6
8	68-604-3481	Large Washer	6
9	68-604-3151	Pivot Washer	18
10	01-125-0050	Bushing	12
11	3256-7	Flat Washer	18
12	3253-8	Lock Washer	12
13	3218-6	Jam Nut	6
14	01-158-0310	Shoulder Bolt	6
15	3256-6	Flat Washer	6
16	13-404-0221	Pivot Washer	12
17	68-604-3491	Small Washer	6
18	3256-4	Flat Washer	18
19	3253-5	Lock Washer	18
20	3217-7	Hex Nut	18
21	01-100-0160	Bearing	6
22	323-8	Capscrew - Hex Hd.	12
23	68-604-3181	Aerator Shaft	3
24	44-004-0262	Casting	12
25	01-126-0030	Bushing	12

Ref. No.	Part No.	Description	No. Used
26	68-604-3421	Center Spacer	9
27	68-604-3451	Inside Spacer	6
28	68-604-3431	End Spacer	6
29	3253-7	Lock Washer	2
30	3217-9	Hex Nut	2
31	3218-7	Jam Nut	13
32	01-168-1614	Machinery Bushing	6
33	68-604-3171	Main Arm End	3
34	327-7	Capscrew - Hex Hd.	6
35	3217-11	Hex Nut	6
36	68-705-4061	L.H. Lift Arm	1
37	68-705-4071	R.H. Lift Arm	1
38	68-704-4201	Hitch Stabilizer	2
39	01-252-0010	Hitch Pin w/nuts & lock washer	2
40	01-168-2010	Machinery Bushing	6(var)
41	328-7	Capscrew - Hex Hd.	2
42	01-166-1200	Flat Washer	18
43	3253-9	Lock Washer	4
44	3217-12	Hex Nut	5
45	328-2	Capscrew - Hex Hd.	3
46	325-8	Capscrew - Hex Hd.	2
47	68-604-3291	Weight (optional)	3
48	68-604-3571	Spring Mount	2
49	01-506-0640	Decal - Aerator 687	2
50	01-506-0470	Decal - Toro	2

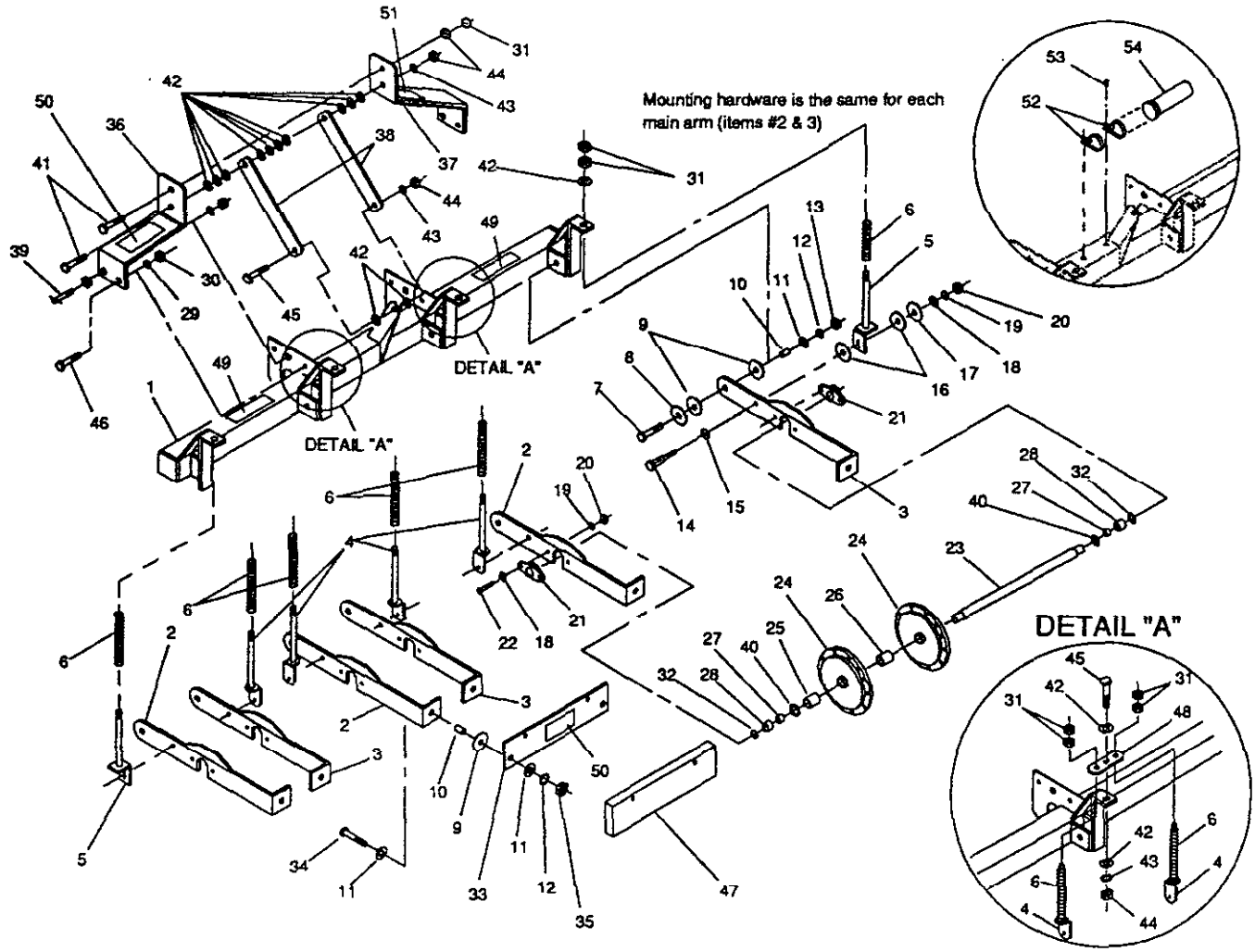

AERATOR 687 - MODEL NO. 44860 (Cont.)

687-001

Ref. No.	Part No.	Description	No. Used
51	01-506-0340	Decal - Danger	1
*	01-506-0550	Decal - Grease	10
52	2412-133	R-Clamps	2

Ref. No.	Part No.	Description	No. Used
53	01-161-0020	Pop Rivet	2
54	74-0720	Manual Tube	1

* Not Illustrated

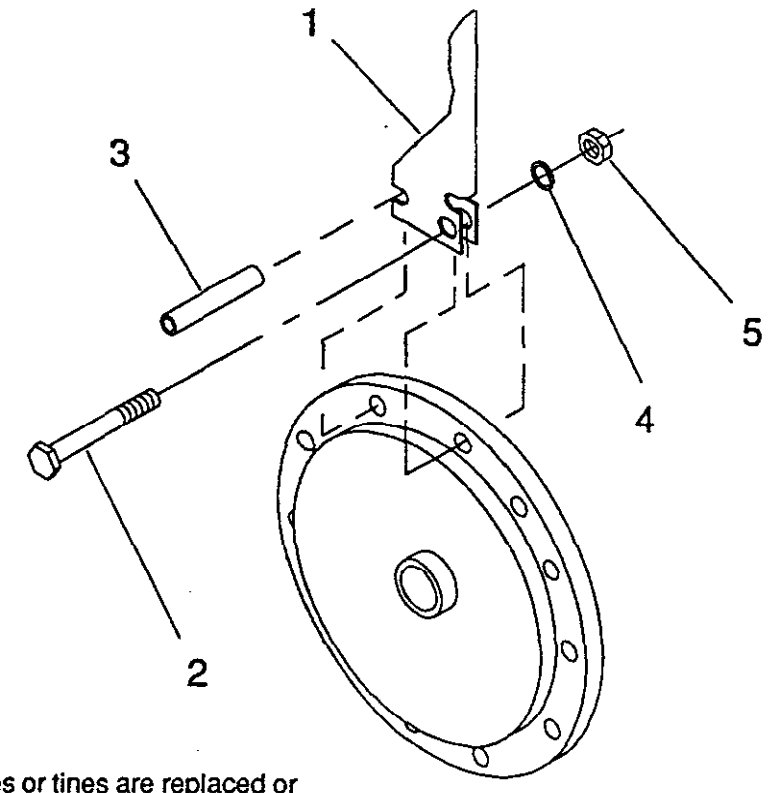

NOTE: When blades or tines are replaced or re-installed, the pins (item 3) must be in the front position on the aerator wheel.

TINE & BLADE ASSEMBLY

686-003

Ref. No.	Part No.	Description	No. Used
1	01-283-0050	Coring Tine, 1/2" closed	96
*	01-283-0070	Coring Tine, 1/2" open	96
*	01-283-0060	Coring Tine, 3/4" closed	96
*	01-283-0080	Coring Tine, 3/4" open	96
*	01-283-0030	Slicing Blade, 4"	96

Ref. No.	Part No.	Description	No. Used
2	325-7	Capscrew - Hex Hd.	96
3	32121-122	Roll Pin	96
4	3253-7	Lock Washer	96
5	3217-9	Hex Nut	96

* Not Illustrated

PART NUMBER INDEX

Part No.	Description	Pg. No.	Ref. No.	Qty.
01-100-0160	Bearing	4	21	6
01-100-0160	Bearing	3	21	6
01-125-0050	Bushing	3	10	12
01-125-0050	Bushing	4	10	12
01-126-0030	Bushing	3	25	12
01-126-0030	Bushing	4	25	12
01-158-0310	Shoulder Bolt	3	14	6
01-158-0310	Shoulder Bolt	4	14	6
01-159-0010	Presto Pin	2	36	2
01-159-0060	Presto Pin	1	27	1
01-161-0020	Pop Rivet	2	33	2
01-161-0020	Pop Rivet	5	53	2
01-166-1200	Flat Washer	3	29	6
01-166-1200	Flat Washer	4	42	18
01-168-1614	Machinery Bushing	3	32	6
01-168-1614	Machinery Bushing	4	32	6
01-168-2010	Machinery Bushing	3	36	6
01-168-2010	Machinery Bushing	4	40	6
01-190-1614	Castle Nut	1	8	2
01-201-0190	Hydraulic Fitting	1	19	2
01-201-0330	Hydraulic Fitting	1	20	1
01-215-0050	Grease Fitting	2	31	4
01-252-0010	Hitch Pin	4	39	2
01-252-0060	Hitch Pin	1	25	1
01-252-0150	Clevis Pin	2	35	2
01-261-0190	Spring	3	6	6
01-261-0190	Spring	4	6	6
01-269-0230	Tire & Wheel	1	5	2
01-283-0030	Slicing Blade	6	*	96
01-283-0050	Coring Tine	6	1	96
01-283-0060	Coring Tine	6	*	96
01-283-0070	Coring Tine	6	*	96
01-283-0080	Coring Tine	6	*	96
01-301-0050	Cylinder	1	18	1
01-301-0100	Seal Kit	1	*	1
01-305-0040	Hand Pump	1	12	1
01-305-0420	Seal Kit	1	*	1
01-312-0500	Hose Assembly	1	16	1
01-506-0340	Decal - Danger	1	29	1
01-506-0340	Decal - Danger	5	51	1
01-506-0470	Decal - Toro	1	28	1
01-506-0470	Decal - Toro	3	40	1
01-506-0470	Decal - Toro	4	50	2
01-506-0550	Decal - Grease	3	*	12
01-506-0550	Decal - Grease	5	*	10
01-506-0640	Decal - Aerator 687	4	49	2
01-506-0680	Decal - Aerator 686	1	30	2
13-404-0221	Pivot Washer	3	16	12
13-404-0221	Pivot Washer	4	16	12
2412-133	R-Clamp	2	32	2
2412-133	R-Clamps	5	52	2
32121-122	Roll Pin	6	3	96
3217-11	Hex Nut	3	35	6
3217-11	Hex Nut	4	35	6
3217-12	Hex Nut	3	37	2
3217-12	Hex Nut	4	44	5
3217-7	Hex Nut	1	4	4
3217-7	Hex Nut	3	20	18
3217-7	Hex Nut	4	20	18
3217-9	Hex Nut	1	15	7
3217-9	Hex Nut	4	30	2
3217-9	Hex Nut	6	5	96
3218-6	Jam Nut	3	13	6
3218-6	Jam Nut	4	13	6
3218-7	Jam Nut	3	30	12
3218-7	Jam Nut	4	31	13
323-7	Capscrew - Hex Hd.	1	13	4
323-8	Capscrew - Hex Hd.	3	22	12
323-8	Capscrew - Hex Hd.	4	22	12
325-10	Capscrew - Hex Hd.	1	21	6
325-5	Capscrew - Hex Hd.	1	22	1
325-7	Capscrew - Hex Hd.	6	2	96
325-8	Capscrew - Hex Hd.	4	46	2
3253-5	Lock Washer	1	3	4
3253-5	Lock Washer	3	19	18
3253-5	Lock Washer	4	19	18
3253-7	Lock Washer	1	14	7
3253-7	Lock Washer	4	29	2
3253-7	Lock Washer	6	4	96
3253-8	Lock Washer	3	12	12
3253-8	Lock Washer	4	12	12
3253-9	Lock Washer	3	39	2
3253-9	Lock Washer	4	43	4
3256-4	Flat Washer	1	2	2
3256-4	Flat Washer	3	18	18
3256-4	Flat Washer	4	18	18
3256-6	Flat Washer	1	26	8
3256-6	Flat Washer	3	15	6
3256-6	Flat Washer	4	15	6
3256-7	Flat Washer	3	11	18
3256-7	Flat Washer	4	11	18
327-6	Capscrew - Hex Hd.	3	7	6
327-6	Capscrew - Hex Hd.	4	7	6
327-7	Capscrew - Hex Hd.	3	34	6
327-7	Capscrew - Hex Hd.	4	34	6
3272-23	Cotter Pin	1	9	2
328-2	Capscrew - Hex Hd.	3	38	2
328-2	Capscrew - Hex Hd.	4	45	3
328-7	Capscrew - Hex Hd.	4	41	2
44-004-0262	Casting	3	24	12
44-004-0262	Casting	4	24	12
68-604-3151	Pivot Washer	3	9	18
68-604-3151	Pivot Washer	4	9	18
68-604-3171	Main Arm End	3	33	3
68-604-3171	Main Arm End	4	33	3
68-604-3181	Aerator Shaft	3	23	3
68-604-3181	Aerator Shaft	4	23	3
68-604-3291	Weight	3	31	3
68-604-3291	Weight	4	47	3
68-604-3321	Wheel Spacer	1	6	4
68-604-3421	Center Spacer	3	26	9
68-604-3421	Center Spacer	4	26	9
68-604-3431	End Spacer	3	28	6
68-604-3431	End Spacer	4	28	6
68-604-3451	Inside Spacer	3	27	6
68-604-3451	Inside Spacer	4	27	6
68-604-3481	Large Washer	3	8	6
68-604-3481	Large Washer	4	8	6
68-604-3491	Small Washer	3	17	6
68-604-3491	Small Washer	4	17	6
68-604-3501	Hitch Spacer	1	17	2
68-604-3511	Vibration Strap	1	23	1

* Not Illustrated

PART NUMBER INDEX (Continued)

Part No.	Description	Pg. No.	Ref. No.	Qty.
68-604-3532	Transport Lock Plate	1	24	2
68-604-3571	Spring Mount	3	1	2
68-604-3571	Spring Mount	4	48	2
68-605-3053	Main Frame	1	1	1
68-605-3071	Spring Slide Bracket	3	5	2
68-605-3071	Spring Slide Bracket	4	5	2
68-605-3081	Pump Mount	1	11	1
68-605-3091	Axle Shaft	1	7	2
68-605-3102	Tongue Assembly	1	10	1
68-605-3111	Main Arm-L.H.	3	2	3
68-605-3111	Main Arm-L.H.	4	2	3
68-605-3121	Main Arm-R.H.	3	3	3
68-605-3121	Main Arm-R.H.	4	3	3
68-605-3141	Spring Bracket	3	4	4
68-605-3141	Spring Bracket	4	4	4
68-704-4201	Hitch Stabilizer	4	38	2
68-705-4053	Main Frame	4	1	1
68-705-4061	L.H. Lift Arm	4	36	1
68-705-4071	R.H. Lift Arm	4	37	1
74-0720	Manual Tube	2	34	1
74-0720	Manual Tube	5	54	1

PRODUCT CHANGES

In an effort to make improvements available to TORO owners as quickly as possible minor changes are incorporated into Toro's products from time to time that do not become immediately shown in the Parts Catalog. If such a change has been made in your unit which is not reflected in your manual see your TORO Distributor or an Authorized Service Dealer for information and part numbers.

IDENTIFICATION & ORDERING

MODEL AND NUMBERS

The Aerators 686 and 687 has two identification numbers; a model number and a serial number. The two numbers are stamped on a plate which is located on the main arm. In any correspondence concerning the Aerators 686 & 687, supply model and serial numbers to assure that correct information and replacement parts are obtained.

To order replacement parts from your TORO Distributor or an Authorized Service Dealer, supply the following information:

1. Model and serial number of the Aerator 686 or 687
2. Part number description and the quantity of part (s) desired.

NOTE: Do not order by reference number if a parts catalog is being used: use the PART NUMBER.

TABLE OF CONTENTS

Description	Page	Description	Page
Aerator 686 - Model No. 44850 Frame & Hitch Assembly	1 - 2	Aerator 687 - Model No. 44860	4 - 5
Aerator 686 - Model No. 44850 Main Arm Assembly	3	Tine & Blade Assembly	6
		Part Number Index	7 - 8

NOTES

NOTES

MAINTENANCE CHART

Date								