FORM NO. 01-505-0980.4

TORO®

MODEL NO. 44501 - 20101 thru 30380

PARTS CATALOG

TOPDRESSER 2300

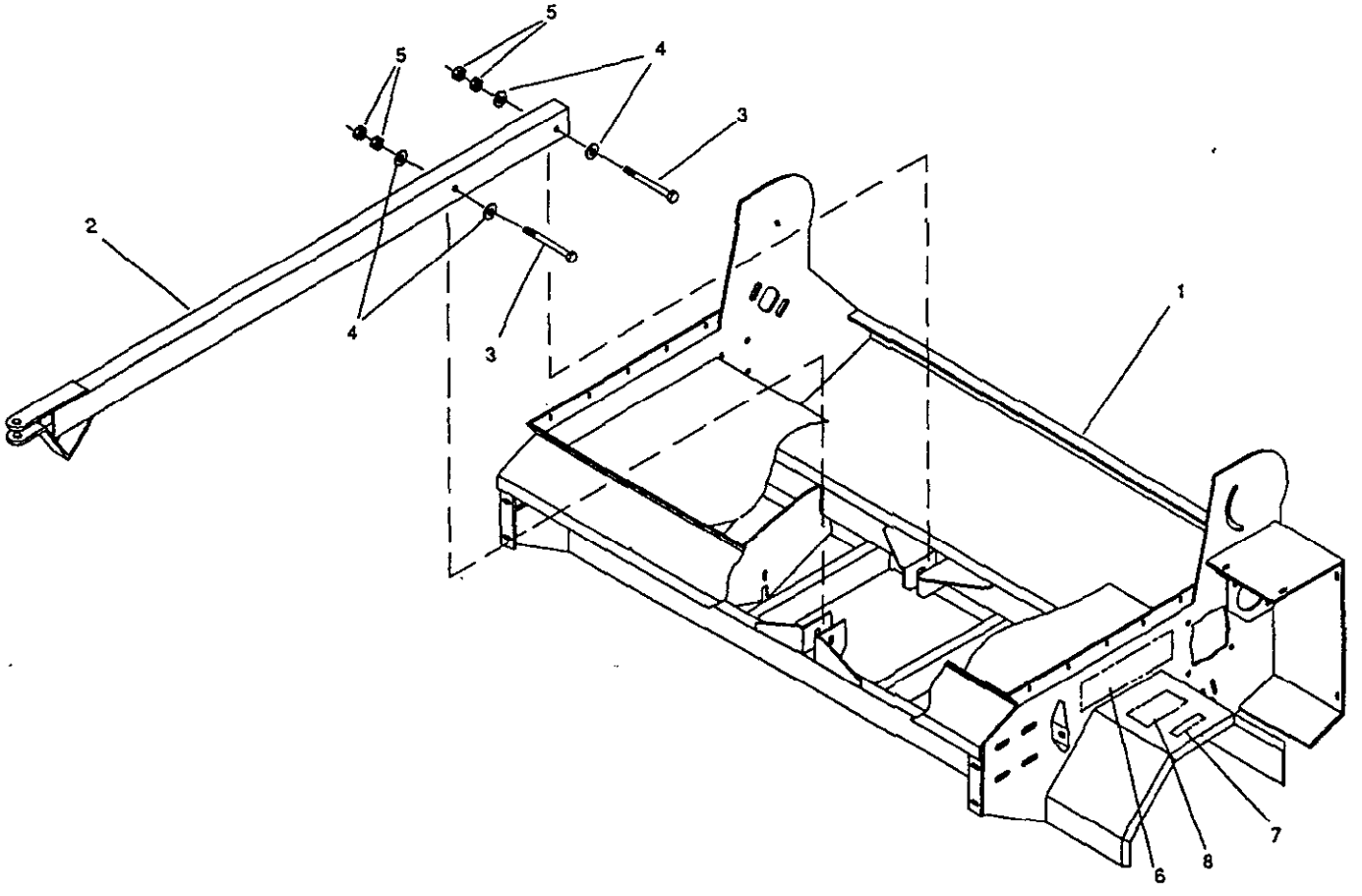

TONGUE ASSEMBLY

23-001

Ref. No.	Part No.	Description	No. Used
1	23-005-0103	Main Frame	1
2	23-005-0161	Hitch	1
3	325-14	Capscrew - Hex Hd.	2
4	3256-6	Flat Washer	4
5	3218-5	Jam Nut	4
6	01-506-0690	Decal - Topdresser 2300	2
7	75-5190	Decal - No Riders	2
8	01-506-0240	Decal - Warning	2

© The TORO Company - 1993

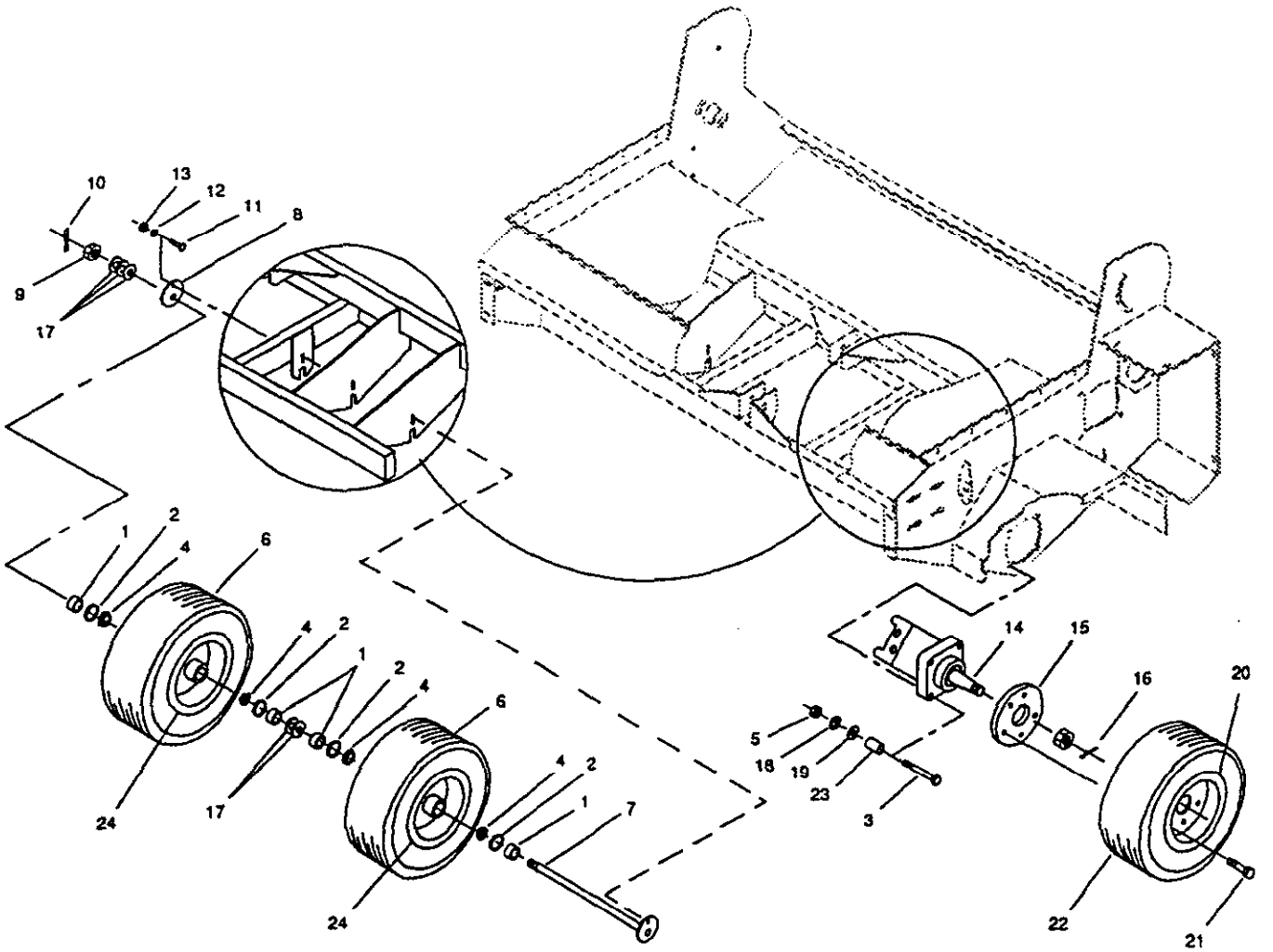

WHEEL ASSEMBLY

23-002

Ref. No.	Part No.	Description	No. Used
1	01-269-0060	Axle Spacer	8
2	01-405-0460	Seal	8
3	325-14	Capscrew - Hex Hd.	8
4	01-102-0130	Bearing Cone	8
5	3217-9	Hex Nut	8
6	01-269-0350	Tire	4
7	23-005-0151	Axle	2
8	23-004-0241	Axle Bracket	2
9	01-190-1210	Slotted Nut	2
10	3272-15	Cotter Pin	2
11	323-6	Capscrew - Hex Hd.	2
12	3253-5	Lock Washer	2
13	3217-7	Hex Nut	2

Ref. No.	Part No.	Description	No. Used
14	01-304-0510	Hydraulic Motor	2
*	01-304-0560	Seal Kit	1
15	01-269-1000	Hub	2
16	01-151-0170	Cotter Pin	2
17	01-168-1210	Machinery Bushing	10
18	3253-7	Lock Washer	8
19	3256-26	"SAE" Flat Washer	8
20	01-269-1020	Wheel	2
21	01-158-1610	Lug Bolt	10
22	01-269-0320	Tire	2
23	23-004-0851	Motor Bolt Spacer	8
24	01-269-0360	Wheel	4

* Not Illustrated

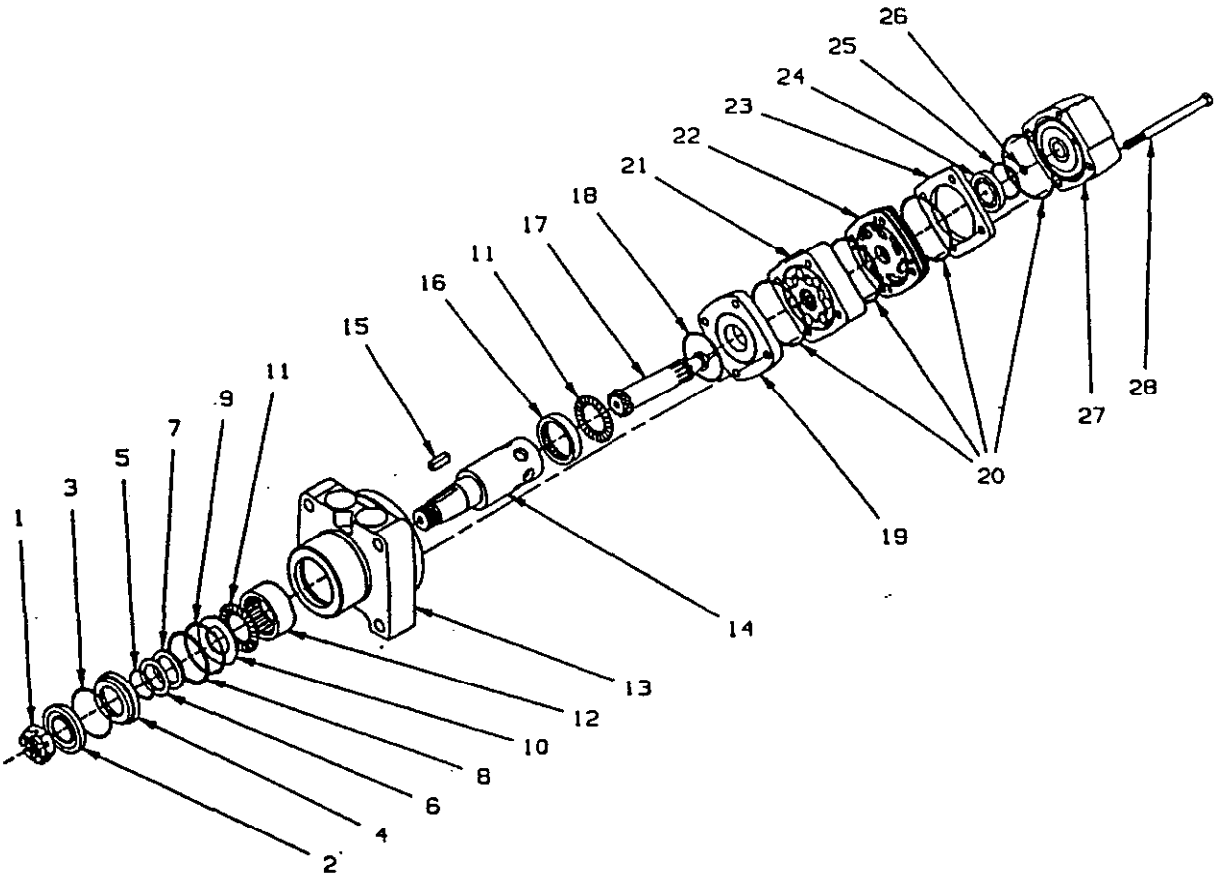

HYDRAULIC MOTOR NO. 01-304-0510

23-009

Ref. No.	Part No.	Description	No. Used
1		Slotted Nut	1
2		Seal - Dust	1
3		Ring - Snap	1
4		Seal - Carrier	1
5		Shim - Backup	1
6		Seal - Backup	1
7		Seal - Shaft	1
8		Shim - Backup	1
9		Seal - Housing, High Press.	1
10		Thrust Washer	1
11	01-304-0660	Thrust Bearing	2
12		Roller Bearing	1
13		Housing	1
14		Shaft	1
15		Key - Shaft	1
16		Roller Bearing	1
17	01-304-0770	Drive Link	1
18		Seal	1
19	01-304-0710	Divider Plate	1
20		Seal - Body	4

Ref. No.	Part No.	Description	No. Used
21	01-304-0780	Rotor Set	1
22	01-304-0730	Manifold	1
23		Commutator Plate	1
24		Commutator	1
25		Seal - Commutator	1
26		Seal	1
27	01-304-0750	End Cover	1
28	01-304-0790	Bolt Set	1
*	01-304-0900	Shaft Kit (Incl. Ref. #1, 14, 15)	1
*	01-304-0560	Seal Kit (Incl. Ref. #2, 3, 5-9, 18, 20, 25, 26)	1
*	01-304-0670	Seal Kit (Incl. Ref. #4, 10)	1
*	01-304-0690	Housing/Bearing Kit (Incl. Ref. #12, 13, 16)	1
*	01-304-0740	Commutator Set (Incl. Ref. #23, 24)	1

* Not Illustrated

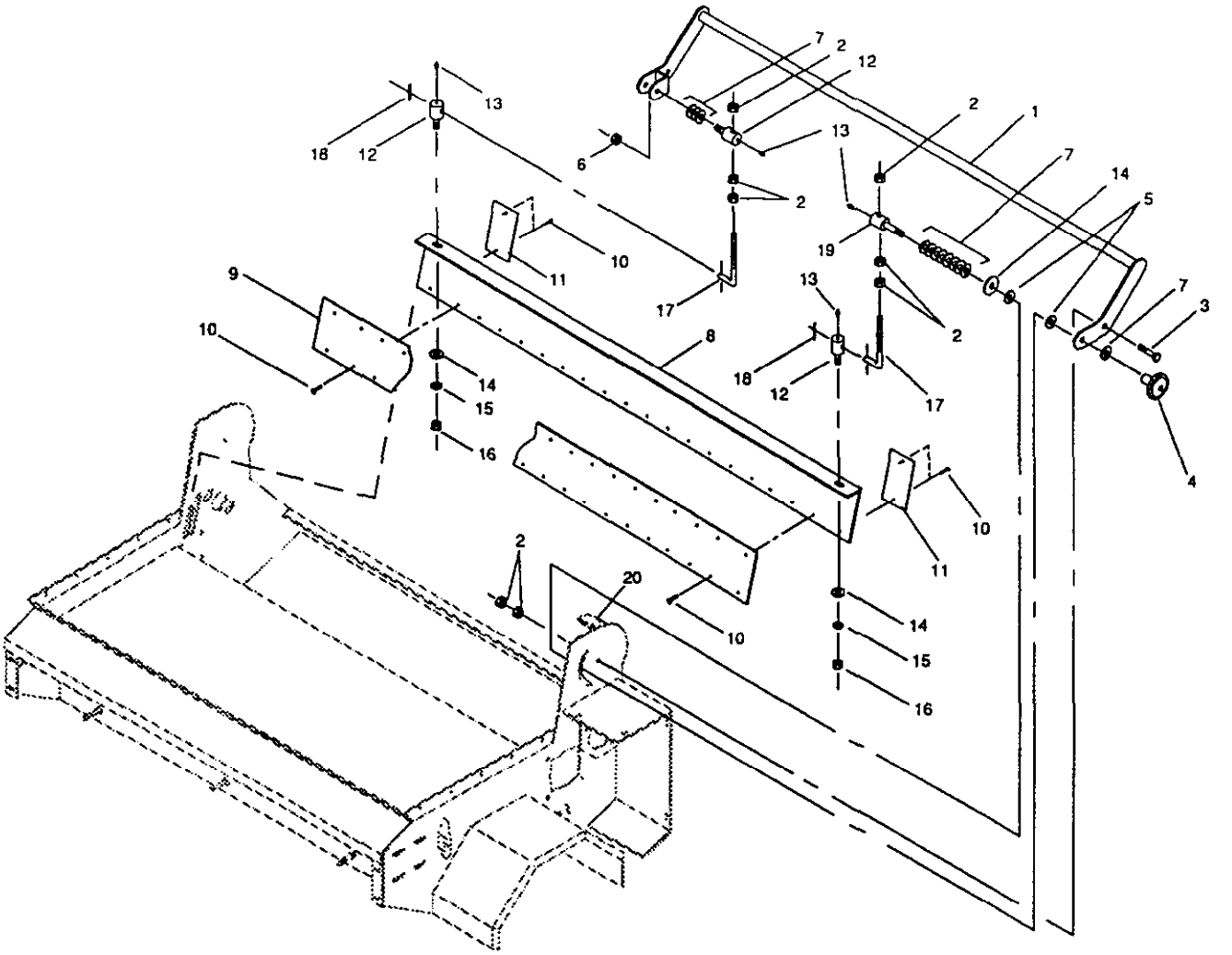

GATE CONTROL ASSEMBLY

23-003

Ref. No.	Part No.	Description	No. Used
1	23-005-0141	Gate Control Arm	1
2	3218-5	Jam Nut	10
3	325-5	Capscrew - Hex Hd.	2
4	01-256-0200	Knob	1
5	23-004-0721	Plastic Washer	2
6	01-189-0813	Lock Nut	1
7	3256-26	"SAE" Flat Washer	11(var)
8	23-004-0991	Gate	1
9	23-004-0221	Gate Seal	1
10	01-161-0090	Pop Rivet	24

Ref. No.	Part No.	Description	No. Used
11	23-004-1041	Slide	2
12	56-104-0301	Adjustment Lug-short	3
13	01-215-0050	Grease Zerk	4
14	3256-6	Flat Washer	3
15	3253-7	Lock Washer	2
16	3217-9	Hex Nut	2
17	23-004-1021	Gate Rod	2
18	3272-11	Cotter Pin	2
19	23-004-1061	Adjustment Lug-long	1
20	01-506-0210	Decal - Height Adjustment	1

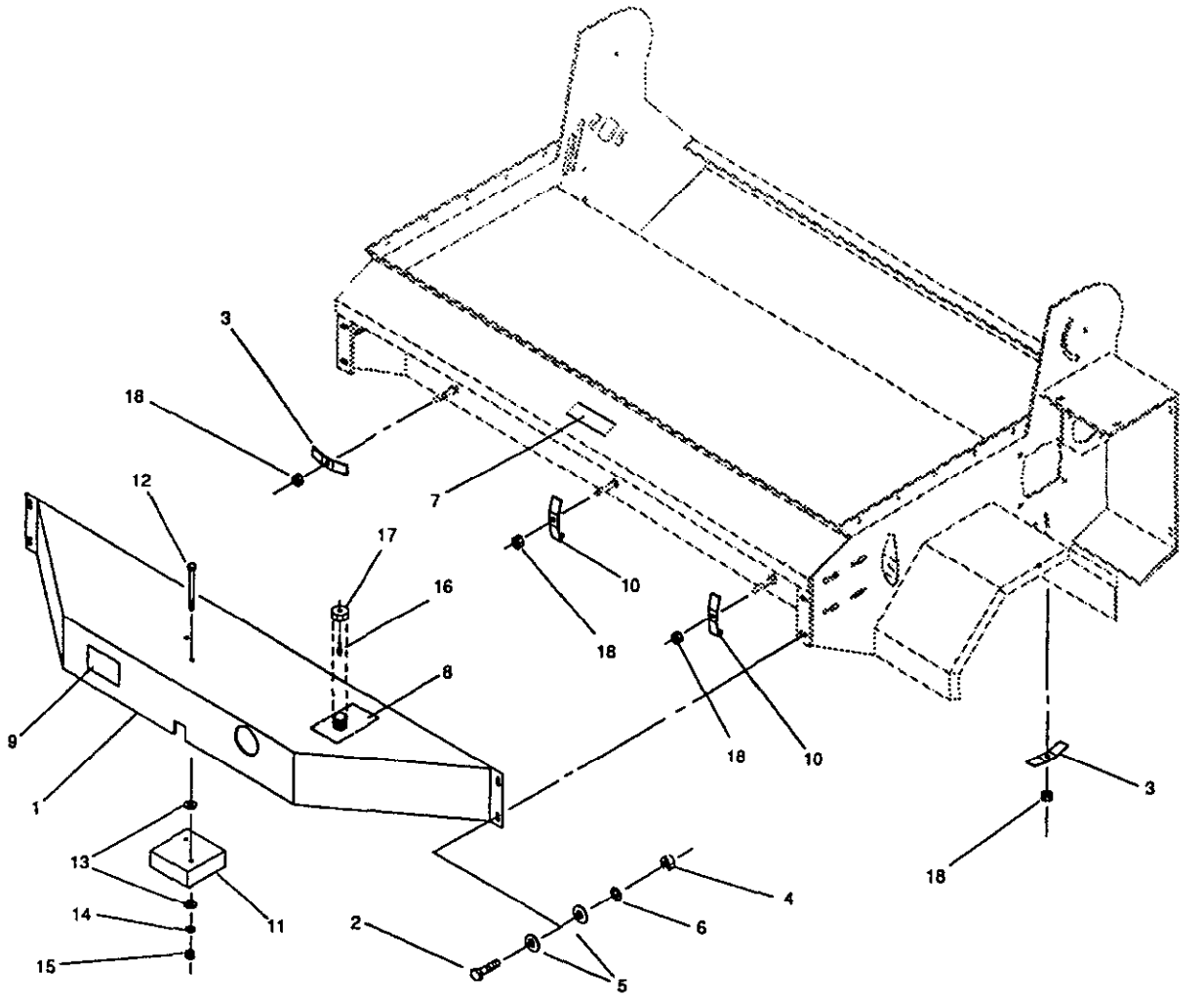

HYDRAULIC TANK ASSEMBLY

23-004

Ref. No.	Part No.	Description	No. Used
1	23-005-0171	Hydraulic Tank	1
2	323-6	Capscrew - Hex Hd.	4
3	48-004-3431	Hose Bracket	2
4	3217-7	Hex Nut	4
5	3256-4	Flat Washer	8
6	3253-5	Lock Washer	4
7	75-5190	Decal - No Riders	1
8	01-506-0250	Decal - Danger	1
9	01-506-0500	Decal - Toro	1
10	23-004-0901	Hose Bracket	2

Ref. No.	Part No.	Description	No. Used
11	01-308-0670	Hydraulic Valve	1
12	322-12	Capscrew - Hex Hd.	2
13	3256-3	Flat Washer	4
14	3253-4	Lock Washer	2
15	3217-6	Hex Nut	2
16	01-269-1530	Valve Stem	1
17	02-201-2170	Cap	1
*	23-002-0021	Pressure Cap Assembly (Incl. Ref. #16, 17)	1
18	3296-22	Lock Nut	4

* Not Illustrated

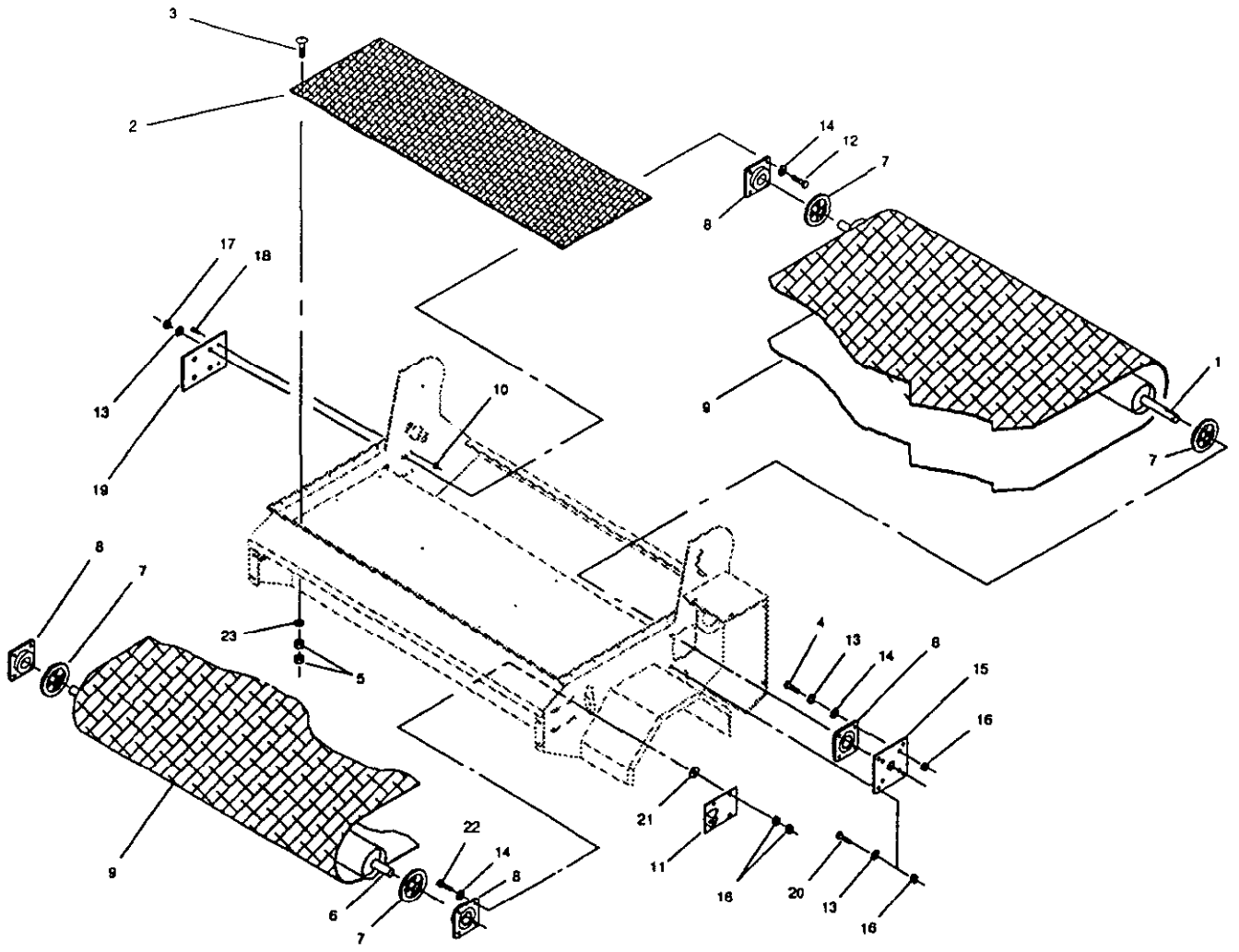

ROLLER ASSEMBLY

23-005

Ref. No.	Part No.	Description	No. Used
1	23-005-0121	Drive Roller	1
2	23-004-0271	Conveyor Top	1
3	01-158-0280	Truss Head Machine Screw	12
4	325-6	Capscrew - Hex Hd.	4
5	3217-26	Hex Nut	24
6	23-005-0111	Idler Roller	1
7	01-260-1790	Sheave	4
8	01-100-0180	Bearing	4
9	01-271-0210	Conveyor Belt	1
*	01-271-0360	Pin - Lacing	1
10	3217-6	Hex Nut	2
11	23-005-0951	Bearing Pull	2

Ref. No.	Part No.	Description	No. Used
12	325-7	Capscrew - Hex Hd.	8
13	3253-7	Lock Washer	12
14	3256-26	"SAE" Flat Washer	16
15	23-004-0581	Roller Cover	1
16	3218-5	Jam Nut	24
17	3217-9	Hex Nut	4
18	322-3	Capscrew - Hex Hd.	2
19	23-004-0911	Roller Lock Plate	1
20	325-4	Capscrew - Hex Hd.	4
21	23-004-0721	Belt Roller Washer	8
22	325-8	Capscrew - Hex Hd.	4
23	3253-3	Lock Washer	12

* Not Illustrated

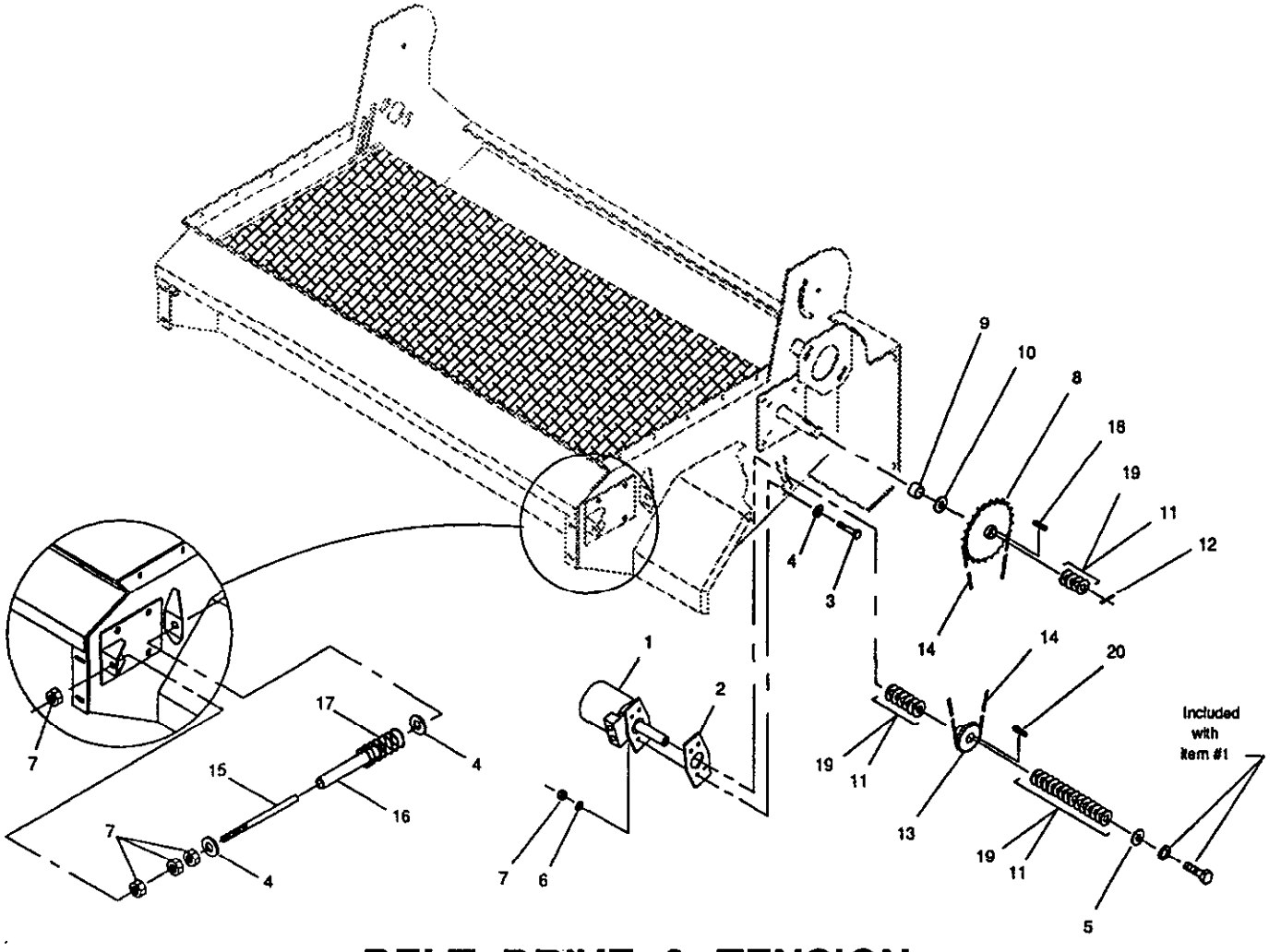

BELT DRIVE & TENSION

23-006

Ref. No.	Part No.	Description	No. Used
1	01-304-0420	Hydraulic Motor	1
*	01-304-0260	Seal Kit	1
2	18-204-0461	Motor Spacer	1
3	325-7	Capscrew - Hex Hd.	4
4	3256-6	Flat Washer	8
5	3256-7	Flat Washer	1
6	3253-7	Lock Washer	4
7	3217-9	Hex Nut	12
8	01-262-0960	Sprocket	1
9	23-004-0751	Sprocket Spacer	1
10	01-168-2018	Machinery Bushing	1

Ref. No.	Part No.	Description	No. Used
11	01-168-2014	Machinery Bushing	12(var)
12	3272-25	Cotter Pin	1
13	01-262-1270	Sprocket	1
14	23-004-0821	Drive Chain, #50	1
*	01-251-0020	Offset Link, #50	1
15	23-004-0741	Belt Tension Rod	2
16	23-004-0731	Belt Tension Spacer	2
17	01-261-0400	Spring	2
18	48-004-1931	Key	1
19	01-168-2010	Machinery Bushing	12(var)
20	23-004-1091	Key	1

* Not Illustrated

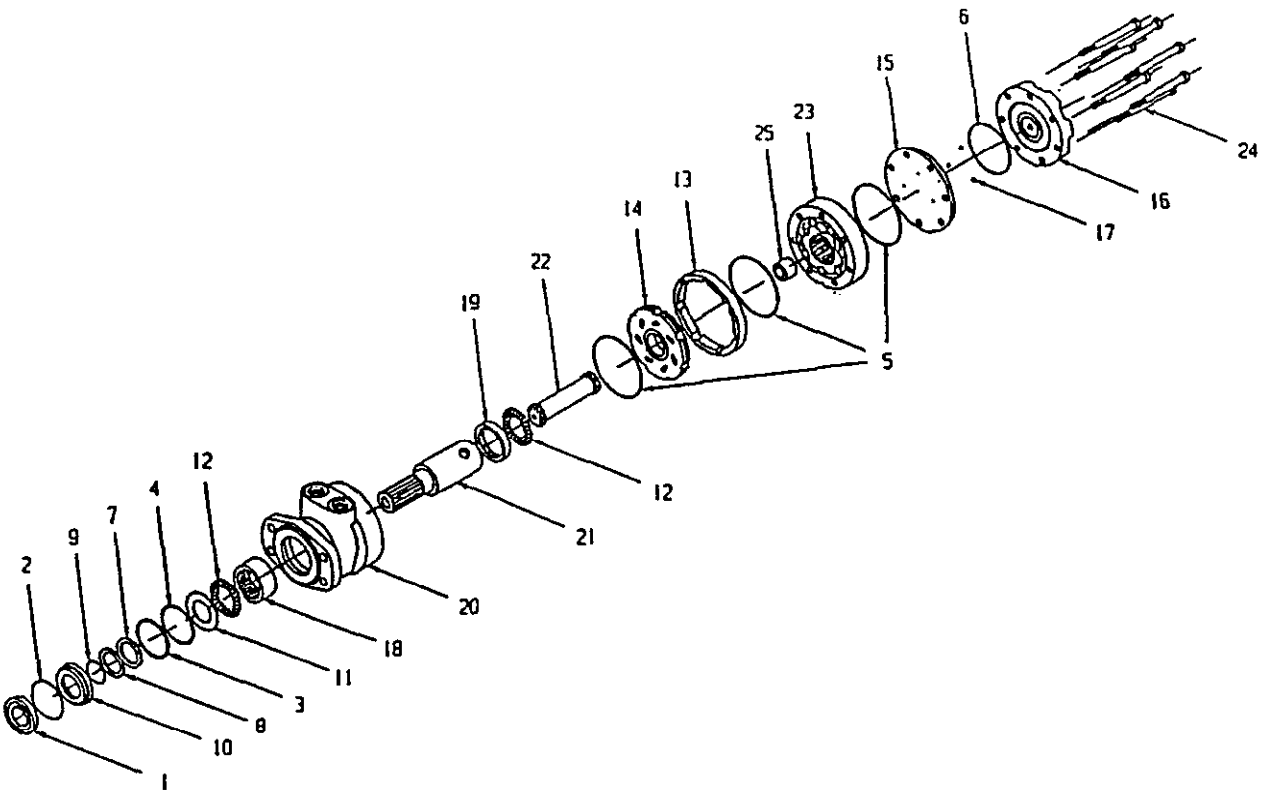

HYDRAULIC MOTOR NO. 01-304-0420

23-011

Ref. No.	Part No.	Description	No. Used
1		Seal - Dust	1
2		Ring - Snap	1
3		Shim - Backup	1
4		Seal - Housing, High Press.	1
5		Seal - Body	3
6		Seal - Body	1
7		Seal - Shaft	1
8		Seal - Backup	1
9		Shim - Backup	1
10		Seal Carrier	1
11		Thrust Washer	1
12	01-304-0660	Thrust Bearing	2
13	01-304-0800	Manifold Boot	1
14	01-304-0810	Manifold CCW	1
15	01-304-0820	Balance Plate	1
16	01-304-0830	End Cover	1

Ref. No.	Part No.	Description	No. Used
17		Ball	4
18		Roller Bearing	1
19		Roller Bearing	1
20		Housing	1
21	01-304-0460	Shaft	1
22		Drive Link	1
23	01-304-0930	Rotor Set	1
24	01-304-0940	Bolts	7
25		Drive Link Spacer	1
*	01-304-0260	Seal Kit (Incl. Ref. #1-11)	1
*	01-304-0910	Housing/Bearing Kit (Incl. Ref. #18, 19, 20)	1
*	01-304-0920	Drive Link (Incl. Ref. #22, 25)	1

* Not Illustrated

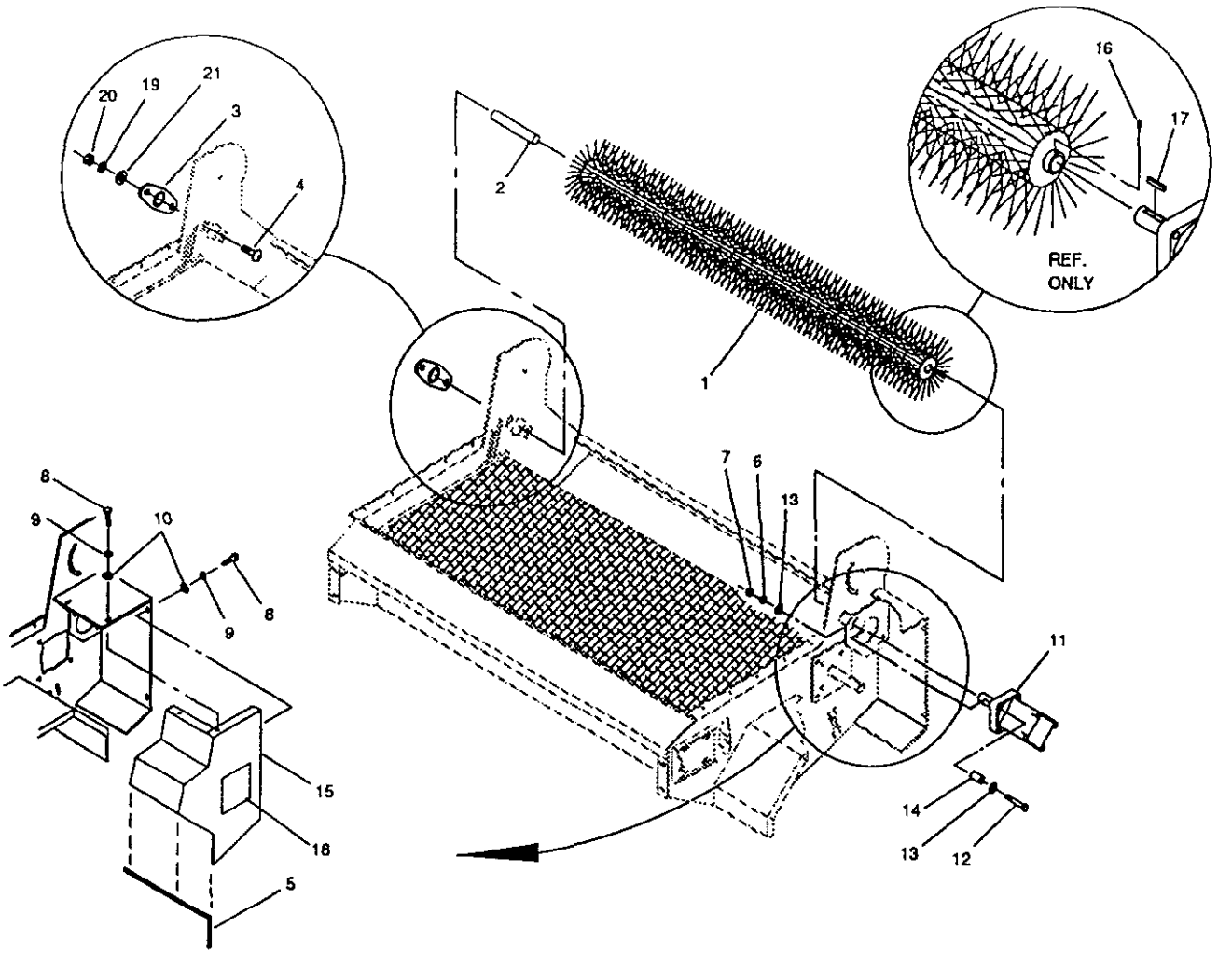

BRUSH ASSEMBLY

23-007

Ref. No.	Part No.	Description	No. Used
1	01-286-0440	Brush (Incl. Ref. #16, 17)	1
2	23-004-0831	Brush Shaft	1
3	01-100-0160	Bearing	1
4	3232-2	Carriage Bolt	2
5	23-004-0931	Rubber Seal	1
6	3253-7	Lock Washer	2
7	3217-9	Hex Nut	2
8	322-3	Capscrew - Hex Hd.	4
9	3253-4	Lock Washer	4
10	3256-3	Flat Washer	4
11	01-304-0500	Hydraulic Motor	1
*	01-304-0560	Seal Kit	1

Ref. No.	Part No.	Description	No. Used
12	325-14	Capscrew - Hex Hd.	2
13	3256-26	"SAE" Flat Washer	4
14	23-004-0851	Motor Bolt Spacer	2
15	23-005-0131	Guard	1
16	01-163-0190	Set Screw	3
17	56-004-2401	Key	1
18	01-506-0050	Decal - Danger	1
19	3253-6	Lock Washer	2
20	3217-8	Hex Nut	2
21	3256-5	Flat Washer	2

* Not Illustrated

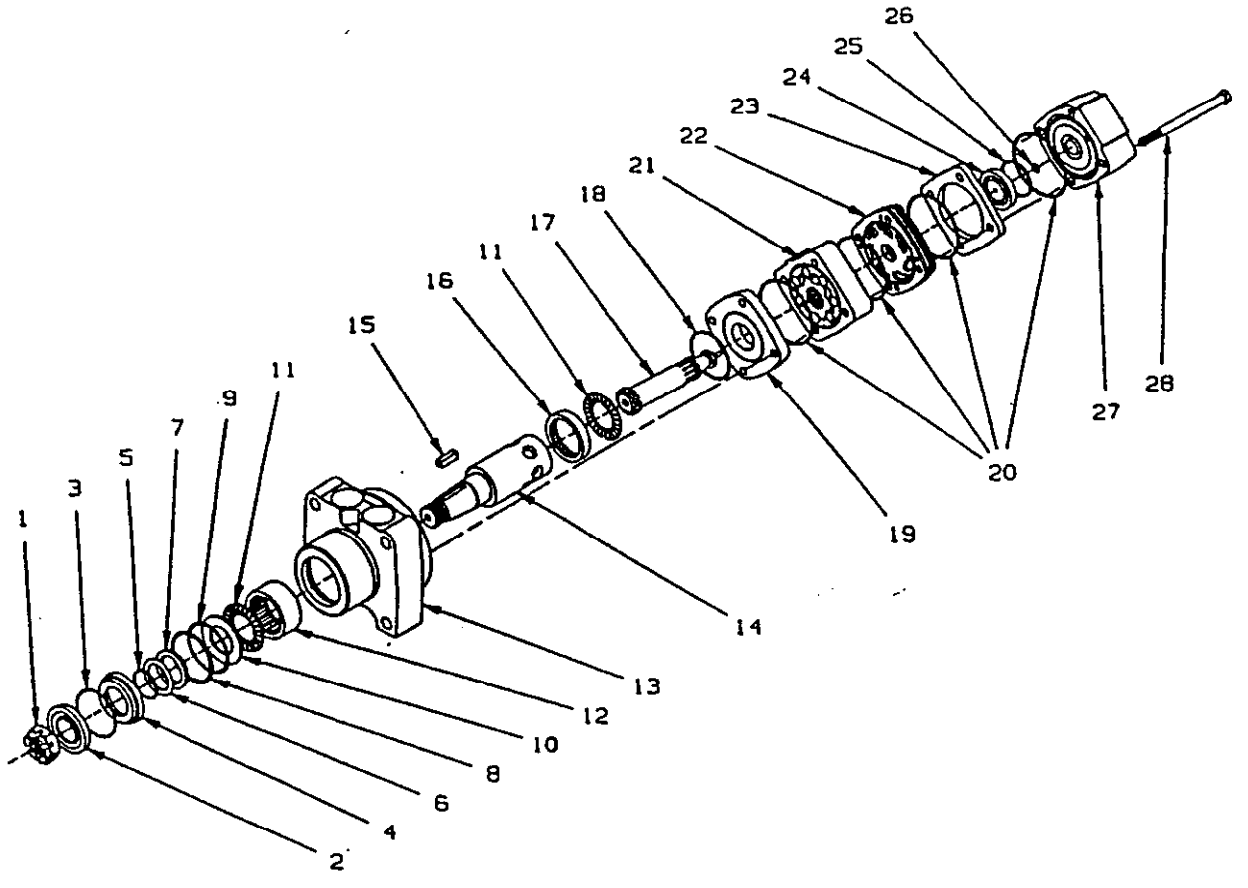

HYDRAULIC MOTOR NO. 01-304-0500

23-010

Ref. No.	Part No.	Description	No. Used
1		Slotted Nut	1
2		Seal - Dust	1
3		Ring - Snap	1
4		Seal - Carrier	1
5		Shim - Backup	1
6		Seal - Backup	1
7		Seal - Shaft	1
8		Shim - Backup	1
9		Seal - Housing, High Press.	1
10		Thrust Washer	1
11	01-304-0660	Thrust Bearing	2
12		Roller Bearing	1
13		Housing	1
14		Shaft	1
15		Key - Shaft	1
16		Roller Bearing	1
17	01-304-0700	Drive Link	1
18		Seal	1
19	01-304-0710	Divider Plate	1
20		Seal - Body	4

Ref. No.	Part No.	Description	No. Used
21	01-304-0720	Rotor Set	1
22	01-304-0730	Manifold	1
23		Commutator Plate	1
24		Commutator	1
25		Seal - Commutator	1
26		Seal	1
27	01-304-0750	End Cover	1
28	01-304-0760	Bolt Set	1
*	01-304-0680	Shaft Kit (Incl. Ref. #1, 14, 15)	1
*	01-304-0560	Seal Kit (Incl. Ref. #2, 3, 5-9, 18, 20, 25, 26)	1
*	01-304-0670	Seal Kit (Incl. Ref. #4, 10)	1
*	01-304-0690	Housing/Bearing Kit (Incl. Ref. #12, 13, 16)	1
*	01-304-0740	Commutator Set (Incl. Ref. #23, 24)	1

* Not Illustrated

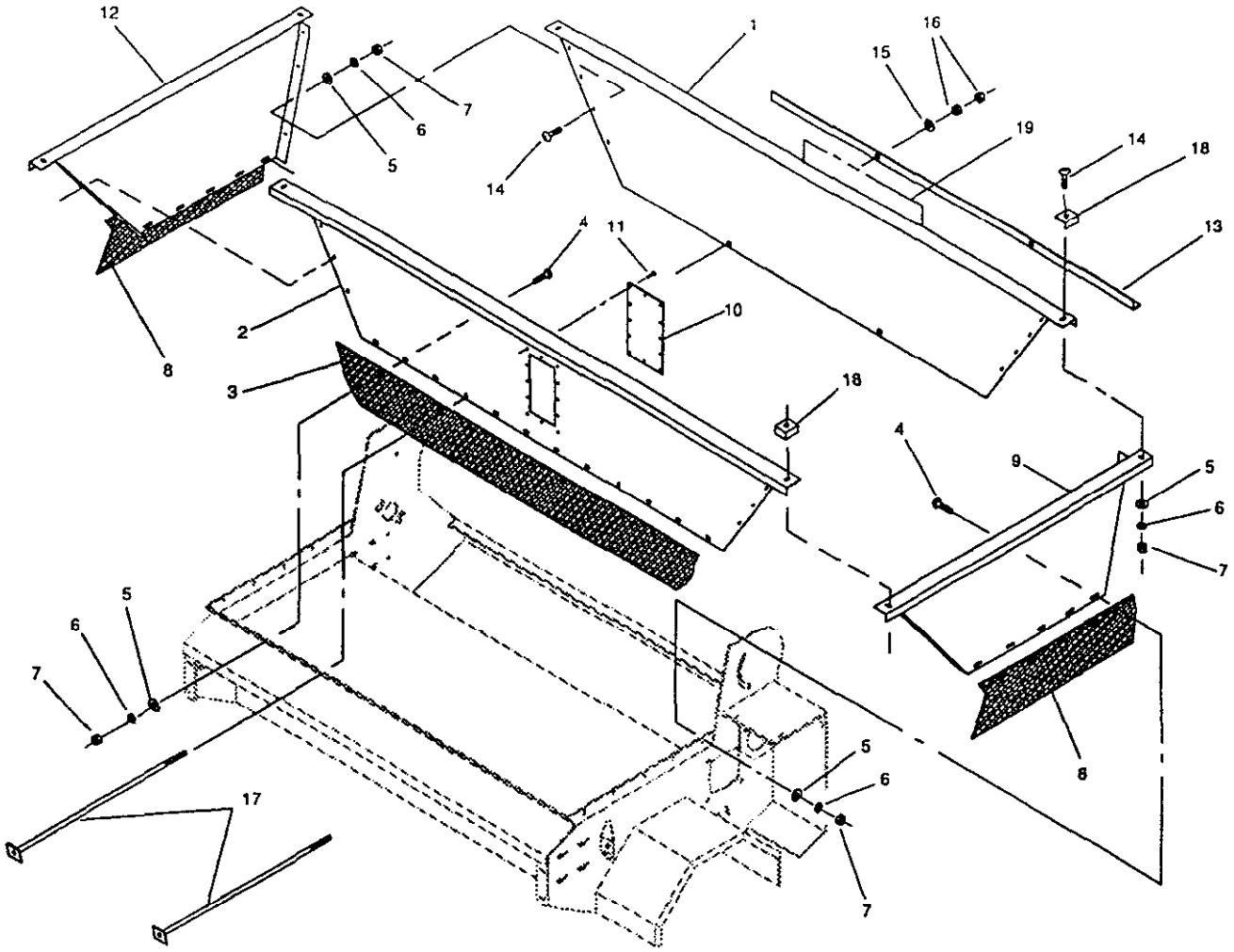

HOPPER ASSEMBLY

23-008

Ref. No.	Part No.	Description	No. Used
1	23-004-1001	Hopper Back	1
2	23-004-0541	Hopper Front	1
3	23-004-0801	Skirt-long	1
4	3229-2	Carriage Bolt	20
5	3256-2	Flat Washer	40
6	3253-3	Lock Washer	40
7	3217-5	Hex Nut	40
8	23-004-0791	Skirt-short	2
9	23-004-0521	Hopper Side - L.H.	1
10	23-004-0981	Sight Glass	1

Ref. No.	Part No.	Description	No. Used
11	01-161-0060	Pop Rivet	12
12	23-004-0871	Hopper Side - R.H.	1
13	23-004-1031	Hopper Brace	1
14	3229-1	Carriage Bolt	20
15	3256-4	Flat Washer	2
16	3217-7	Hex Nut	4
17	23-005-1101	Support Rod	2
18	23-005-0961	Corner Guard	4
19	01-506-0520	Decal - Toro	1

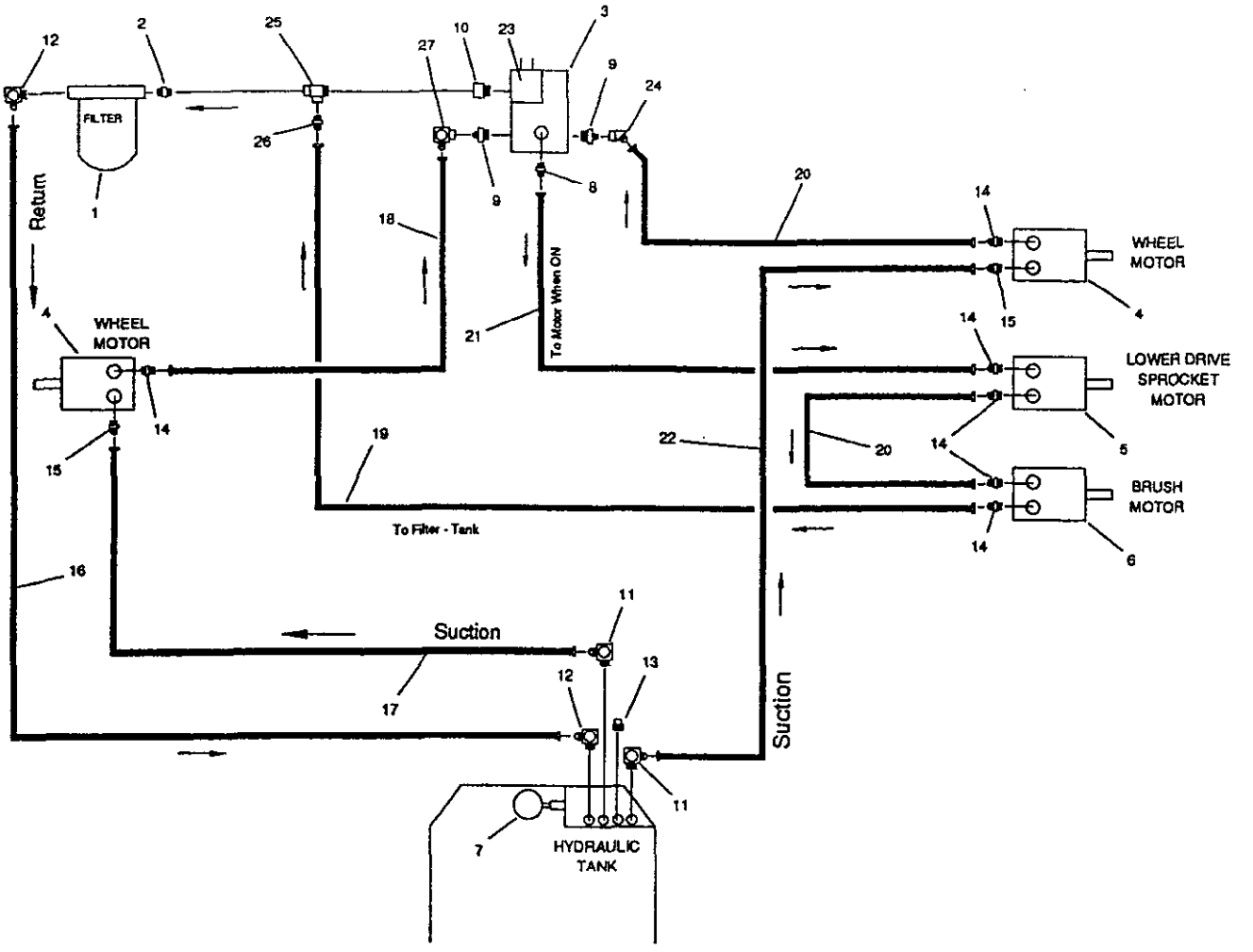

HYDRAULIC SCHEMATIC

23-012

Ref. No.	Part No.	Description	No. Used
1	01-316-0080	Filter Assembly	1
*	01-315-0070	Filter Head	1
*	01-317-0120	Filter Element	1
2	01-201-0230	Fitting, 5404-12	1
3	01-308-0670	Hyd. Valve (Incl. Ref. #23)	1
*	01-308-0970	Relief Cartridge	1
*	01-308-0890	Seal Kit	1
4	01-304-0510	Hyd. Motor	2
*	01-304-0560	Seal Kit	1
5	01-304-0420	Hyd. Motor	1
*	01-304-0260	Seal Kit	1
6	01-304-0500	Hyd. Motor	1
*	01-304-0560	Seal Kit	1
7	01-303-0110	Gauge	1
8	01-201-1230	Fitting	1
9	01-308-0820	Check Valve	2
10	01-201-0930	Fitting	1

Ref. No.	Part No.	Description	No. Used
11	01-201-2160	Fitting	2
12	01-201-1220	Fitting	2
13	01-451-0050	Pipe Plug	1
14	01-201-1350	Fitting	6
15	01-201-2130	Fitting	2
16	01-312-2580	Hyd. Hose	1
17	01-312-2590	Hyd. Hose	1
18	01-312-2220	Hyd. Hose	1
19	01-312-2610	Hyd. Hose	1
20	01-312-2250	Hyd. Hose	2
21	01-312-2620	Hyd. Hose	1
22	01-312-2600	Hyd. Hose	1
23	01-308-0860	Electric Solenoid	1
24	01-201-2660	Fitting	1
25	01-201-0270	Fitting	1
26	01-201-1410	Fitting	1
27	01-201-2410	Fitting	1

* Not Illustrated

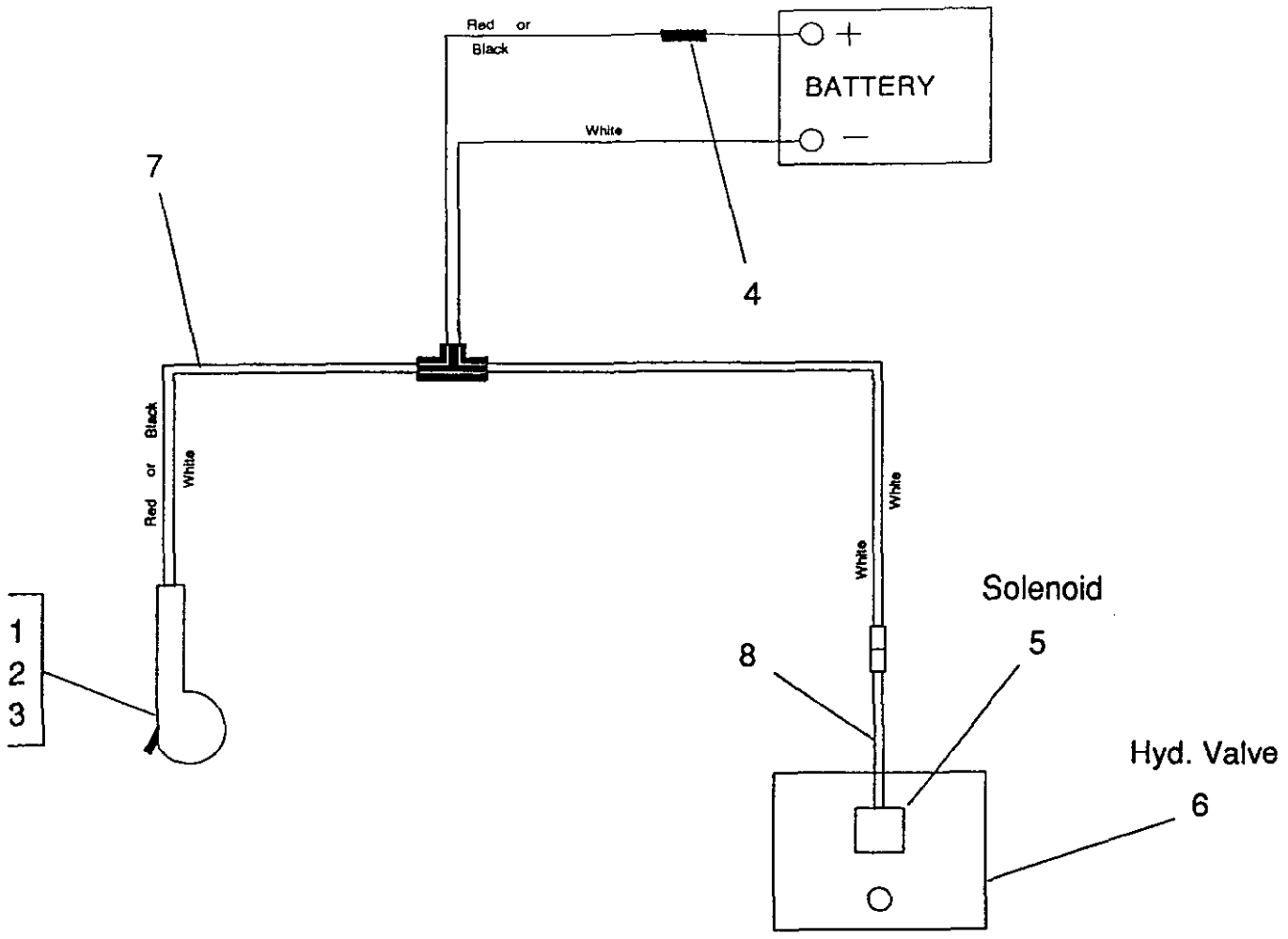

ELECTRICAL SCHEMATIC

23-013

Ref. No.	Part No.	Description	No. Used
1	01-603-0750	Switch	1
2	01-603-0760	Boot	1
3	01-603-0770	Switch Box	1
4	01-612-0520	Fuse	1
5	01-308-0860	Electrical Solenoid	1

Ref. No.	Part No.	Description	No. Used
6	01-308-0670	Hydraulic Valve	1
7	01-606-0220	Wiring Harness, complete (Includes Ref. #1,2,3,4,8)	1
8	01-606-0250	Wiring Harness, short half	1

PART NUMBER INDEX

Part No.	Description	Pg. No.	Ref. No.	Qty.
01-100-0160	Bearing	9	3	1
01-100-0180	Bearing	6	8	4
01-102-0130	Bearing Cone	2	4	8
01-151-0170	Cotter Pin	2	16	2
01-158-0280	Truss Head Machine Screw	6	3	12
01-158-1610	Lug Bolt	2	21	10
01-161-0060	Pop Rivet	11	11	12
01-161-0090	Pop Rivet	4	10	24
01-163-0190	Set Screw	9	16	3
01-168-1210	Machinery Bushing	2	17	10
01-168-2010	Machinery Bushing	7	19	12
01-168-2014	Machinery Bushing	7	11	12
01-168-2018	Machinery Bushing	7	10	1
01-189-0813	Lock Nut	4	6	1
01-190-1210	Slotted Nut	2	9	2
01-201-0230	Fitting	12	2	1
01-201-0270	Fitting	12	25	1
01-201-0930	Fitting	12	10	1
01-201-1220	Fitting	12	12	2
01-201-1230	Fitting	12	8	1
01-201-1350	Fitting	12	14	6
01-201-1410	Fitting	12	26	1
01-201-2130	Fitting	12	15	2
01-201-2160	Fitting	12	11	2
01-201-2410	Fitting	12	27	1
01-201-2660	Fitting	12	24	1
01-215-0050	Grease Zerk	4	13	4
01-251-0020	Offset Link	7	*	1
01-256-0200	Knob	4	4	1
01-260-1790	Sheave	6	7	4
01-261-0400	Spring	7	17	2
01-262-0960	Sprocket	7	8	1
01-262-1270	Sprocket	7	13	1
01-269-0060	Axle Spacer	2	1	8
01-269-0320	Tire	2	22	2
01-269-0350	Tire	2	6	4
01-269-0360	Wheel	2	24	4
01-269-1000	Hub	2	15	2
01-269-1020	Wheel	2	20	2
01-269-1530	Valve Stem	5	16	1
01-271-0210	Conveyor Belt	6	9	1
01-271-0360	Pin - Lacing	6	*	1
01-286-0440	Brush	9	1	1
01-303-0110	Gauge	12	7	1
01-304-0260	Seal Kit	12	*	1
01-304-0260	Seal Kit	7	*	1
01-304-0260	Seal Kit	8	*	1
01-304-0420	Hyd. Motor	12	5	1
01-304-0420	Hydraulic Motor	7	1	1
01-304-0460	Shaft	8	21	1
01-304-0500	Hyd. Motor	12	6	1
01-304-0500	Hydraulic Motor	9	11	1
01-304-0510	Hyd. Motor	12	4	2
01-304-0510	Hydraulic Motor	2	14	2
01-304-0560	Seal Kit	10	*	1
01-304-0560	Seal Kit	12	*	1
01-304-0560	Seal Kit	12	*	1
01-304-0560	Seal Kit	2	*	1
01-304-0560	Seal Kit	3	*	1
01-304-0560	Seal Kit	9	*	1
01-304-0660	Thrust Bearing	10	11	2
01-304-0660	Thrust Bearing	3	11	2
01-304-0660	Thrust Bearing	8	12	2
01-304-0670	Seal Kit	10	*	1
01-304-0670	Seal Kit	3	*	1
01-304-0680	Shaft Kit	10	*	1
01-304-0690	Housing/Bearing Kit	10	*	1
01-304-0690	Housing/Bearing Kit	3	*	1
01-304-0700	Drive Link	10	17	1
01-304-0710	Divider Plate	10	19	1
01-304-0710	Divider Plate	3	19	1
01-304-0720	Rotor Set	10	21	1
01-304-0730	Manifold	10	22	1
01-304-0730	Manifold	3	22	1
01-304-0740	Commutator Set	10	*	1
01-304-0740	Commutator Set	3	*	1
01-304-0750	End Cover	10	27	1
01-304-0750	End Cover	3	27	1
01-304-0760	Bolt Set	10	28	1
01-304-0770	Drive Link	3	17	1
01-304-0780	Rotor Set	3	21	1
01-304-0790	Bolt Set	3	28	1
01-304-0800	Manifold Boot	8	13	1
01-304-0810	Manifold CCW	8	14	1
01-304-0820	Balance Plate	8	15	1
01-304-0830	End Cover	8	16	1
01-304-0900	Shaft Kit	3	*	1
01-304-0910	Housing/Bearing Kit	8	*	1
01-304-0920	Drive Link	8	*	1
01-304-0930	Rotor Set	8	23	1
01-304-0940	Bolts	8	24	7
01-308-0670	Hyd. Valve	12	3	1
01-308-0670	Hydraulic Valve	13	6	1
01-308-0670	Hydraulic Valve	5	11	1
01-308-0820	Check Valve	12	9	2
01-308-0860	Electric Solenoid	12	23	1
01-308-0860	Electrical Solenoid	13	5	1
01-308-0890	Seal Kit	12	*	1
01-308-0970	Relief Cartridge	12	*	1
01-312-2220	Hyd. Hose	12	18	1
01-312-2250	Hyd. Hose	12	20	2
01-312-2580	Hyd. Hose	12	16	1
01-312-2590	Hyd. Hose	12	17	1
01-312-2600	Hyd. Hose	12	22	1
01-312-2610	Hyd. Hose	12	19	1
01-312-2620	Hyd. Hose	12	21	1
01-315-0070	Filter Head	12	*	1
01-316-0080	Filter Assembly	12	1	1
01-317-0120	Filter Element	12	*	1
01-405-0460	Seal	2	2	8
01-451-0050	Pipe Plug	12	13	1
01-506-0050	Decal - Danger	9	18	1
01-506-0210	Decal - Height Adjustment	4	20	1
01-506-0240	Decal - Warning	1	8	2
01-506-0250	Decal - Danger	5	8	1
01-506-0500	Decal - Toro	5	9	1
01-506-0520	Decal - Toro	11	19	1
01-506-0690	Decal - Topdresser 2300	1	6	2
01-603-0750	Switch	13	1	1
01-603-0760	Boot	13	2	1
01-603-0770	Switch Box	13	3	1
01-606-0220	Wiring Harness	13	7	1
01-606-0250	Wiring Harness	13	8	1
01-612-0520	Fuse	13	4	1
02-201-2170	Cap	5	17	-
18-204-0461	Motor Spacer	7	2	1

* Not Illustrated

PART NUMBER INDEX (Continued)

Part No.	Description	Pg. No.	Ref. No.	Qty.
..3-002-0021	Pressure Cap Assembly	5	*	1
23-004-0221	Gate Seal	4	9	1
23-004-0241	Axle Bracket	2	8	2
23-004-0271	Conveyor Top	6	2	1
23-004-0521	Hopper Side-L.H.	11	9	1
23-004-0541	Hopper Front	11	2	1
23-004-0581	Roller Cover	6	15	1
23-004-0721	Belt Roller Washer	6	21	8
23-004-0721	Plastic Washer	4	5	2
23-004-0731	Belt Tension Spacer	7	16	2
23-004-0741	Belt Tension Rod	7	15	2
23-004-0751	Sprocket Spacer	7	9	1
23-004-0791	Skirt	11	8	2
23-004-0801	Skirt	11	3	1
23-004-0821	Drive Chain	7	14	1
23-004-0831	Brush Shaft	9	2	1
23-004-0851	Motor Bolt Spacer	2	23	8
23-004-0851	Motor Bolt Spacer	9	14	2
23-004-0871	Hopper Side-R.H.	11	12	1
23-004-0901	Hose Bracket	5	10	2
23-004-0911	Roller Lock Plate	6	19	1
23-004-0931	Rubber Seal	9	5	1
23-004-0981	Sight Glass	11	10	1
23-004-0991	Gate	4	8	1
23-004-1001	Hopper Back	11	1	1
23-004-1021	Gate Rod	4	17	2
23-004-1031	Hopper Brace	11	13	1
23-004-1041	Slide	4	11	2
23-004-1061	Adjustment Lug	4	19	1
23-004-1091	Key	7	20	1
23-005-0103	Main Frame	1	1	1
23-005-0111	Idler Roller	6	6	1
23-005-0121	Drive Roller	6	1	1
23-005-0131	Guard	9	15	1
23-005-0141	Gate Control Arm	4	1	1
23-005-0151	Axle	2	7	2
23-005-0161	Hitch	1	2	1
23-005-0171	Hydraulic Tank	5	1	1
23-005-0951	Bearing Pull	6	11	2
23-005-0961	Corner Guard	11	18	4
23-005-1101	Support Rod	11	17	2
3217-26	Hex Nut	6	5	24
3217-5	Hex Nut	11	7	40
3217-6	Hex Nut	4	15	2
3217-6	Hex Nut	6	10	2
3217-7	Hex Nut	11	16	4
3217-7	Hex Nut	2	13	2
3217-7	Hex Nut	5	4	4
3217-8	Hex Nut	9	20	2
3217-9	Hex Nut	2	5	8
3217-9	Hex Nut	4	16	2
3217-9	Hex Nut	6	17	4
3217-9	Hex Nut	7	7	12
3217-9	Hex Nut	9	7	2
3218-5	Jam Nut	1	5	4
3218-5	Jam Nut	4	2	10
3218-5	Jam Nut	6	16	24
322-12	Capscrew - Hex Hd.	5	12	2
322-3	Capscrew - Hex Hd.	6	18	2
322-3	Capscrew - Hex Hd.	9	8	4
3229-1	Carriage Bolt	11	14	20
3229-2	Carriage Bolt	11	4	20
323-6	Capscrew - Hex Hd.	2	11	2
323-6	Capscrew - Hex Hd.	5	2	4
3232-2	Carriage Bolt	9	4	2
325-14	Capscrew - Hex Hd.	1	3	2
325-14	Capscrew - Hex Hd.	2	3	8
325-14	Capscrew - Hex Hd.	9	12	2
325-4	Capscrew - Hex Hd.	6	20	4
325-5	Capscrew - Hex Hd.	4	3	2
325-6	Capscrew - Hex Hd.	6	4	4
325-7	Capscrew - Hex Hd.	6	12	8
325-7	Capscrew - Hex Hd.	7	3	4
325-8	Capscrew - Hex Hd.	6	22	4
3253-3	Lock Washer	11	6	40
3253-3	Lock Washer	6	23	12
3253-4	Lock Washer	5	14	2
3253-4	Lock Washer	9	9	4
3253-5	Lock Washer	2	12	2
3253-5	Lock Washer	5	6	4
3253-6	Lock Washer	9	19	2
3253-7	Lock Washer	2	18	8
3253-7	Lock Washer	4	15	2
3253-7	Lock Washer	6	13	12
3253-7	Lock Washer	7	6	4
3253-7	Lock Washer	9	6	2
3256-2	Flat Washer	11	5	40
3256-26	"SAE" Flat Washer	2	19	8
3256-26	"SAE" Flat Washer	4	7	11
3256-26	"SAE" Flat Washer	6	14	16
3256-26	"SAE" Flat Washer	9	13	4
3256-3	Flat Washer	5	13	4
3256-3	Flat Washer	9	10	4
3256-4	Flat Washer	11	15	2
3256-4	Flat Washer	5	5	8
3256-5	Flat Washer	9	21	2
3256-6	Flat Washer	1	4	4
3256-6	Flat Washer	4	14	3
3256-6	Flat Washer	7	4	8
3256-7	Flat Washer	7	5	1
3272-11	Cotter Pin	4	18	2
3272-15	Cotter Pin	2	10	2
3272-25	Cotter Pin	7	12	1
3296-22	Lock Nut	5	18	4
48-004-1931	Key	7	18	1
48-004-3431	Hose Bracket	5	3	2
56-004-2401	Key	9	17	1
56-104-0301	Adjustment Lug-short	4	12	3
75-5190	Decal - No Riders	1	7	2
75-5190	Decal - No Riders	5	7	1

* Not Illustrated

PRODUCT CHANGES

In an effort to make improvements available to TORO owners as quickly as possible minor changes are incorporated into Toro's products from time to time that do not become immediately shown in the Parts Catalog. If such a change has been made in your unit which is not reflected in your manual see your TORO Distributor or an Authorized Service Dealer for information and part numbers.

IDENTIFICATION & ORDERING

MODEL AND NUMBERS

The TOPDRESSER 2300 has two identification numbers; a model number and a serial number. The two numbers are stamped on a plate which is located on the hydraulic tank. In any correspondence concerning the Topdresser 2300, supply model and serial numbers to assure that correct information and replacement parts are obtained.

To order replacement parts from your TORO Distributor or an Authorized Service Dealer, supply the following information:

1. Model and serial number of the unit.
2. Part number description and the quantity of part (s) desired.

NOTE: Do not order by reference number if a parts catalog is being used: use the PART NUMBER.

TABLE OF CONTENTS

Description	Page	Description	Page
Tongue Assembly	1	Hydraulic Motor No. 01-304-0420	8
Wheel Assembly	2	Brush Assembly	9
Hydraulic Motor No. 01-304-0510	3	Hydraulic Motor No. 01-304-0500	10
Gate Control Assembly	4	Hopper Assembly	11
Hydraulic Tank Assembly	5	Hydraulic Schematic	12
Roller Assembly	6	Electrical Schematic	13
Belt Drive and Tension	7	Part Number Index	14 - 15